US006846094B2

(12) **United States Patent**
Luk

(10) **Patent No.: US 6,846,094 B2**
(45) **Date of Patent: Jan. 25, 2005**

(54) **FLEXIBLE LED LIGHTING STRIP**

(75) Inventor: **John F. Luk**, Flushing, NY (US)

(73) Assignee: **Altman Stage Lighting, Co., Inc.**, Yonkers, NY (US)

(*) Notice: Subject to any disclaimer, the term of this patent is extended or adjusted under 35 U.S.C. 154(b) by 0 days.

(21) Appl. No.: **10/227,710**

(22) Filed: **Aug. 26, 2002**

(65) **Prior Publication Data**

US 2004/0037079 A1 Feb. 26, 2004

(51) **Int. Cl.**[7] **F21V 4/00**
(52) **U.S. Cl.** **362/252**; 362/240
(58) **Field of Search** 362/84, 227, 230, 362/231, 240, 244, 249–252, 555

(56) **References Cited**

U.S. PATENT DOCUMENTS

5,155,669 A * 10/1992 Yamuro 362/252
5,485,355 A * 1/1996 Voskoboinik et al. 362/84

(List continued on next page.)

FOREIGN PATENT DOCUMENTS

EP	1128127	8/2001
EP	1152184	11/2001
EP	1178260	2/2002
GB	2071837	9/1981

OTHER PUBLICATIONS

Color Kinetics iColor Accent Datasheet, web page print out, BR0091 Rev. 00, 2002.
Color Kinetics iColor Cove Datasheet, web page print out, BR0013 Rev. 07, 2001.
Color Kinetics iColor Fresco Datasheet, web page print out, BR0046 Rev. 04, 2001–2002.
Gelcore Tetra LED System Datasheet, web page print out, publication No.: 092501, dated Sep. 28, 2001.
Lumileds ChipStrip Contour Lighting System Technical Datasheet, web page print out, dated Feb. 28, 2002, obsoletes DS16 (11/00) and DS16 (05/01).

Primary Examiner—Alan Cariaso
(74) *Attorney, Agent, or Firm*—Lackenbach Siegel LLP

(57) **ABSTRACT**

A flexible lighting device, comprising an elongated flexible tube including a translucent tubular shell with opposed tube ends, a flexible helical circuit board positioned in said tube extending between said opposed tube ends, said flexible helical circuit board having an exterior surface spaced from said tubular shell. Electrical circuitry is mounted to the circuit board and is connected to an external input source and an output source of electrical power. A plurality of light emitting diodes (LEDs) is mounted to the exterior surface of the helical circuit board and is electrically connected to the electrical circuitry. The LEDs are positioned adjacent to the tubular wall. The invention includes a method of making the flexible lighting device including providing a parallelogram-shaped flat circuit board having long edges and short edges with acute angles and obtuse angles and further including a stiffening member embedded with said flat circuit board. Electrical circuitry mounted to the flat circuit board and LEDs mounted to the flat circuit board and to the electrical circuitry thereon, are all rolled and extended into a flexible cylindrical circuit board having spaced spirals and gaps that hold the LEDs, and then inserted into the flexible tubular housing. Power input and power output connectors are added to the electrical circuitry of the flexible helical circuit board, and connector end caps are secured to the opposed ends of the tubular housing.

3 Claims, 17 Drawing Sheets

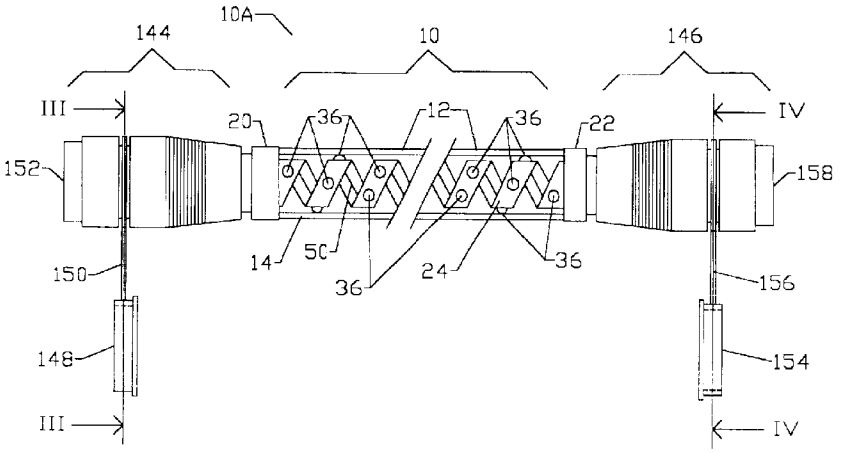

U.S. PATENT DOCUMENTS

5,552,971 A * 9/1996 Madden 362/84
5,711,594 A * 1/1998 Hay 362/84
5,871,271 A * 2/1999 Chien 362/106
5,879,069 A * 3/1999 Chien 362/84
5,911,493 A 6/1999 Walker et al.
6,082,867 A * 7/2000 Chien 362/84
6,179,440 B1 1/2001 Palmer
6,379,190 B1 4/2002 Prazoff
6,394,623 B1 5/2002 Tsui
6,394,626 B1 5/2002 McColloch
6,406,166 B1 6/2002 Ko
6,580,228 B1 * 6/2003 Chen et al. 362/240
2002/0027778 A1 3/2002 Ko
2002/0027780 A1 3/2002 Ko
2002/0071276 A1 * 6/2002 Blum 362/250
2003/0090910 A1 * 5/2003 Chen 362/555

* cited by examiner

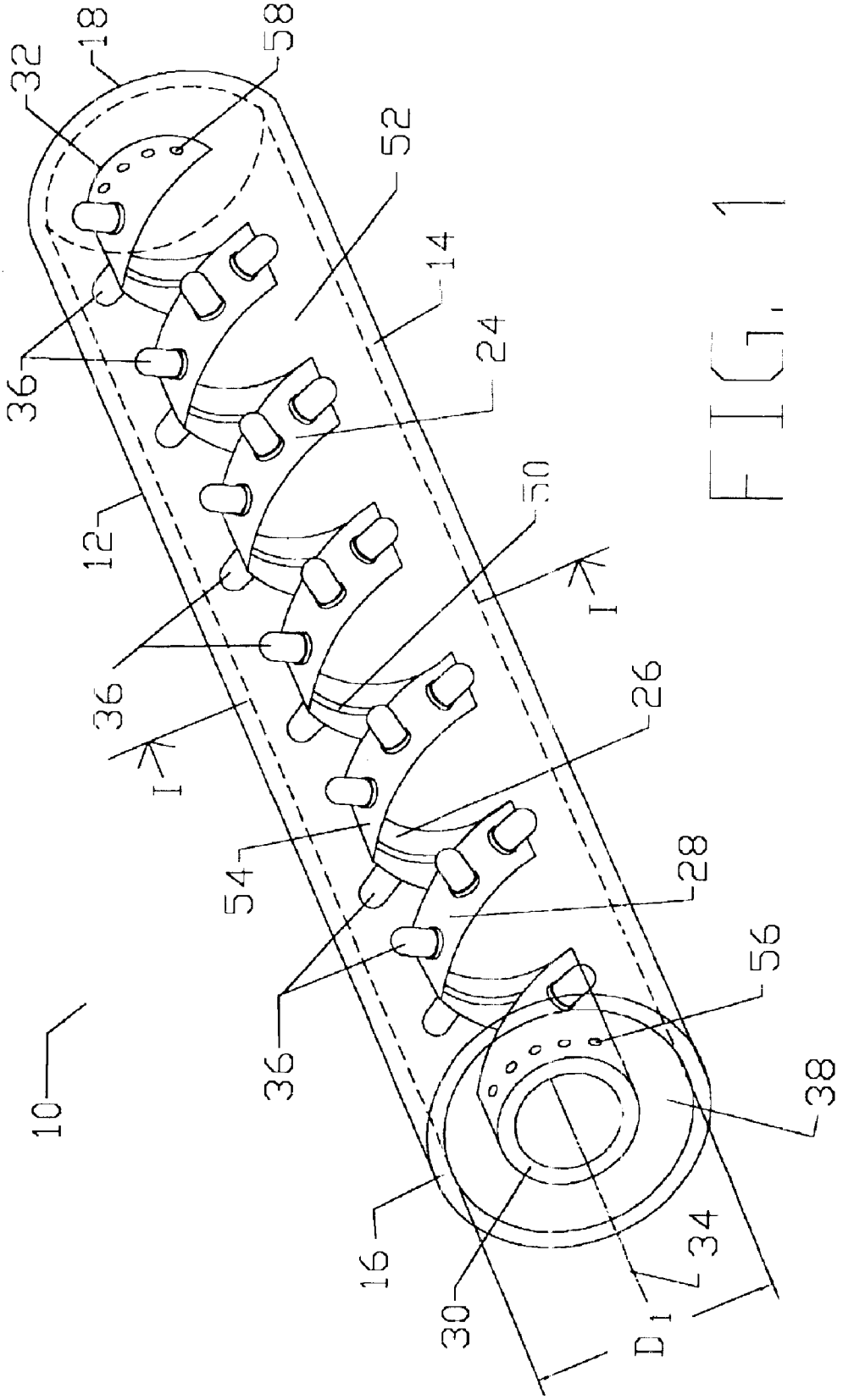

FIG. 1

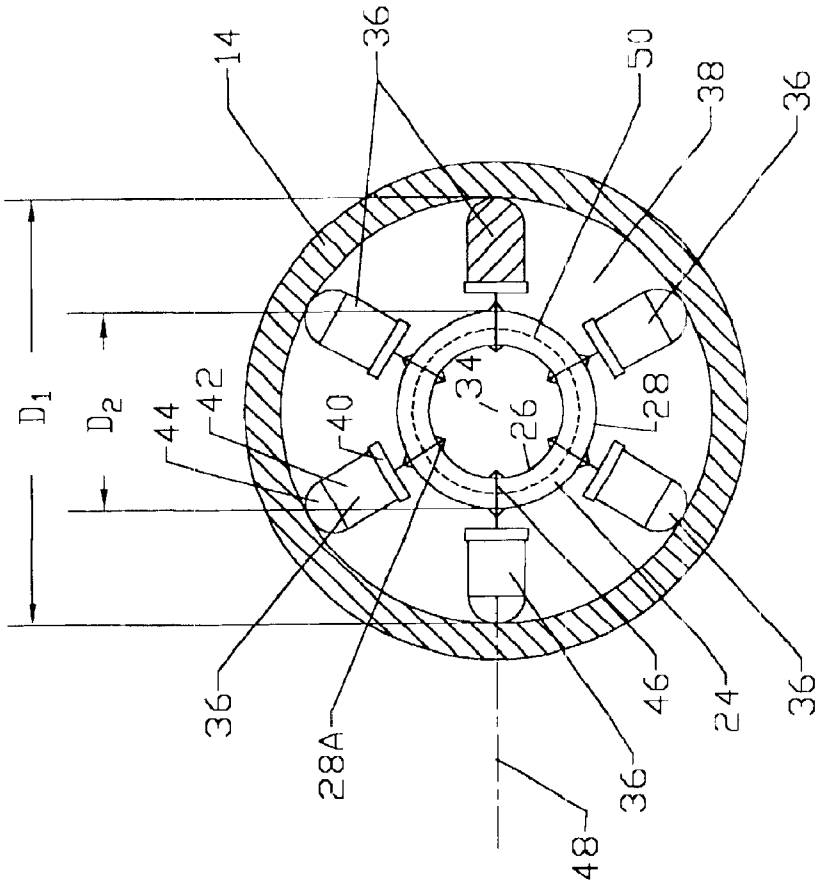

SECTION I-I

FIG. 2

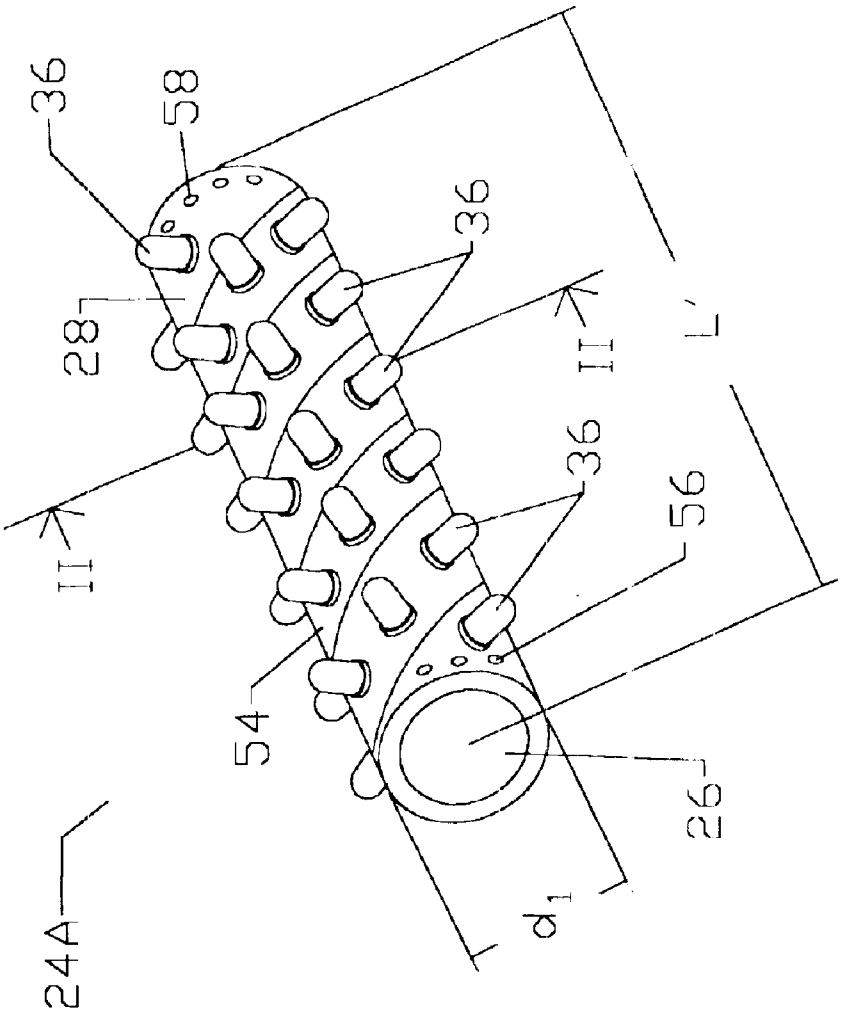

FIG. 3

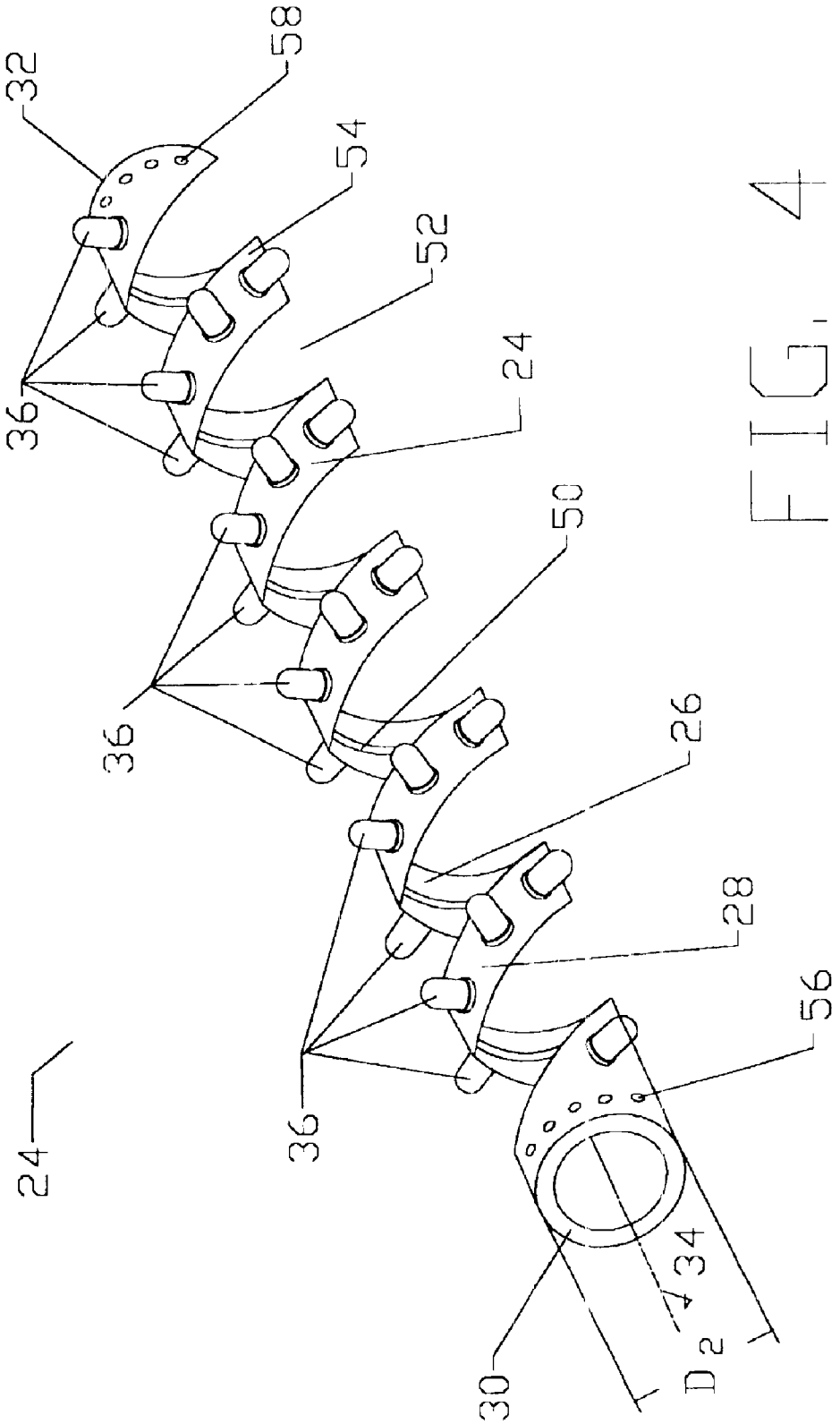

FIG. 4

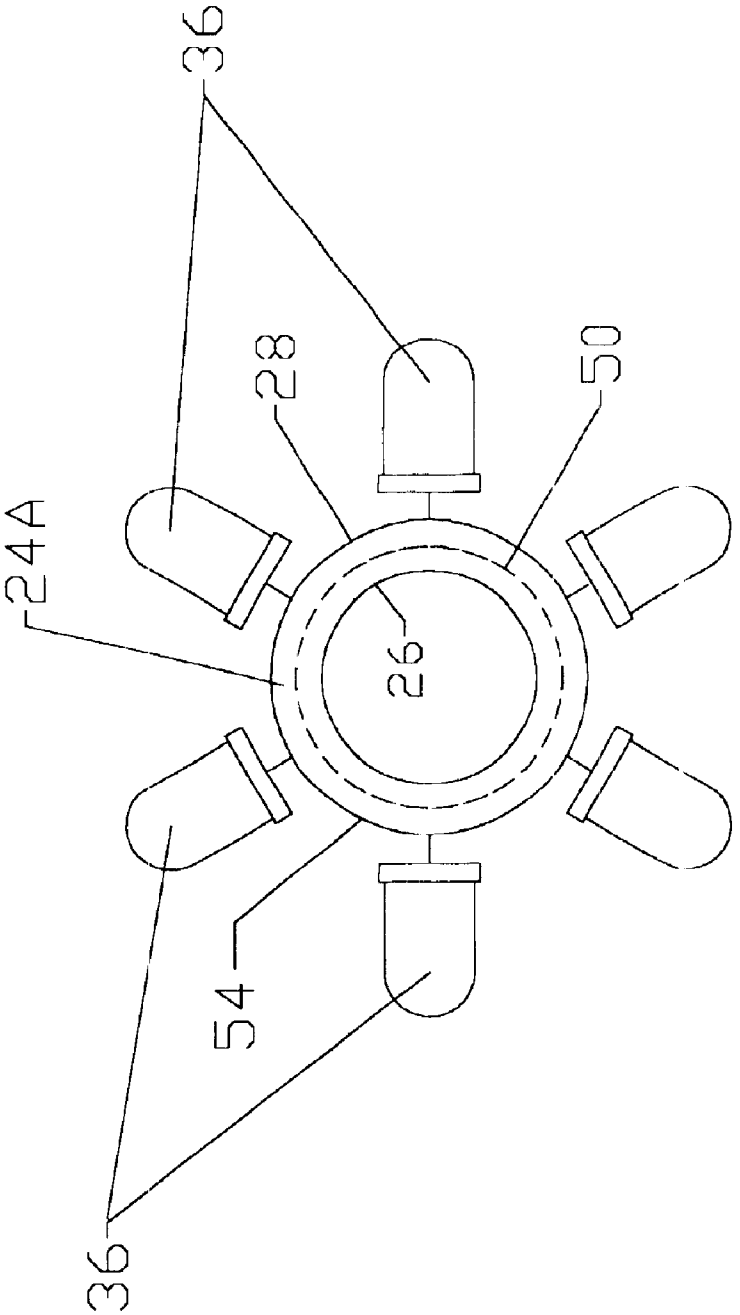

SECTION II-II

FIG. 5

FIG. 6

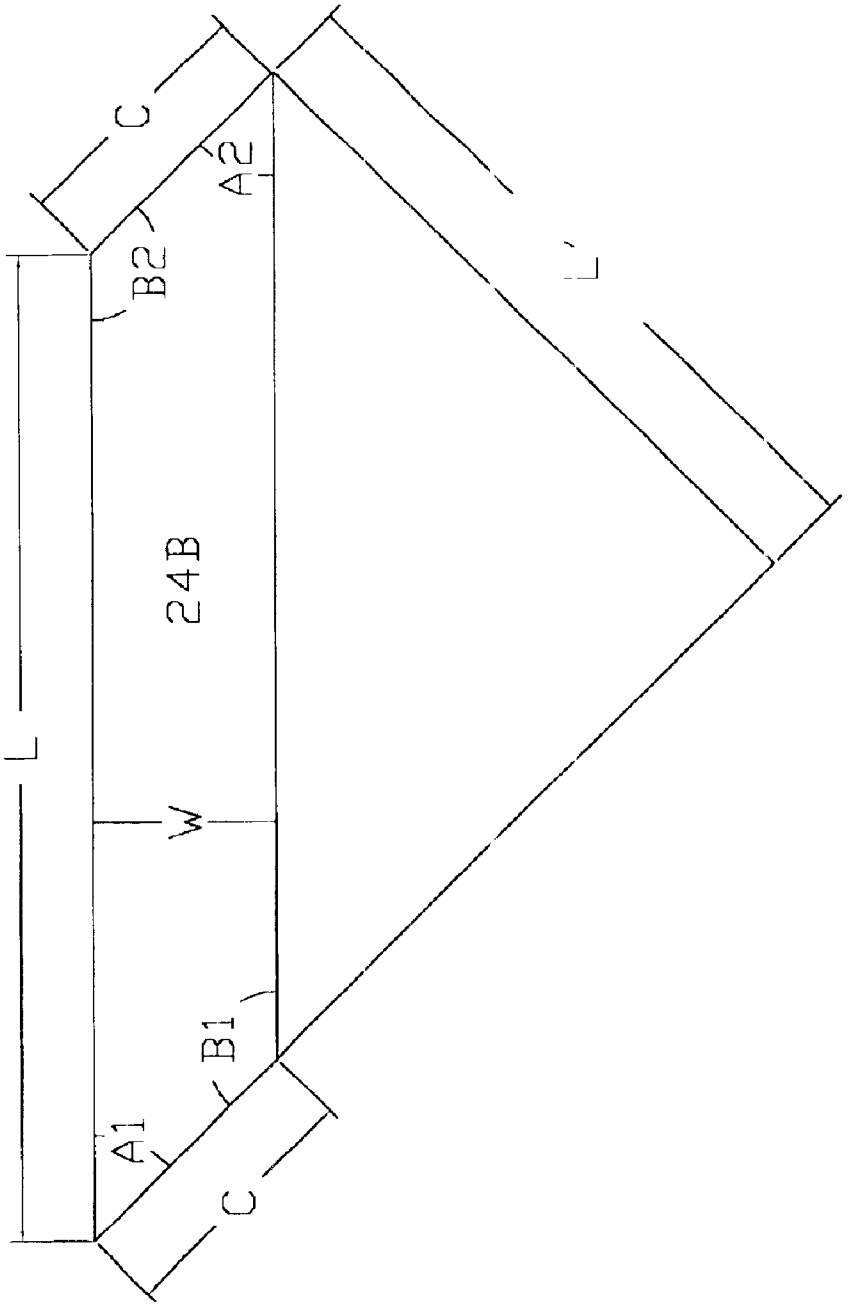

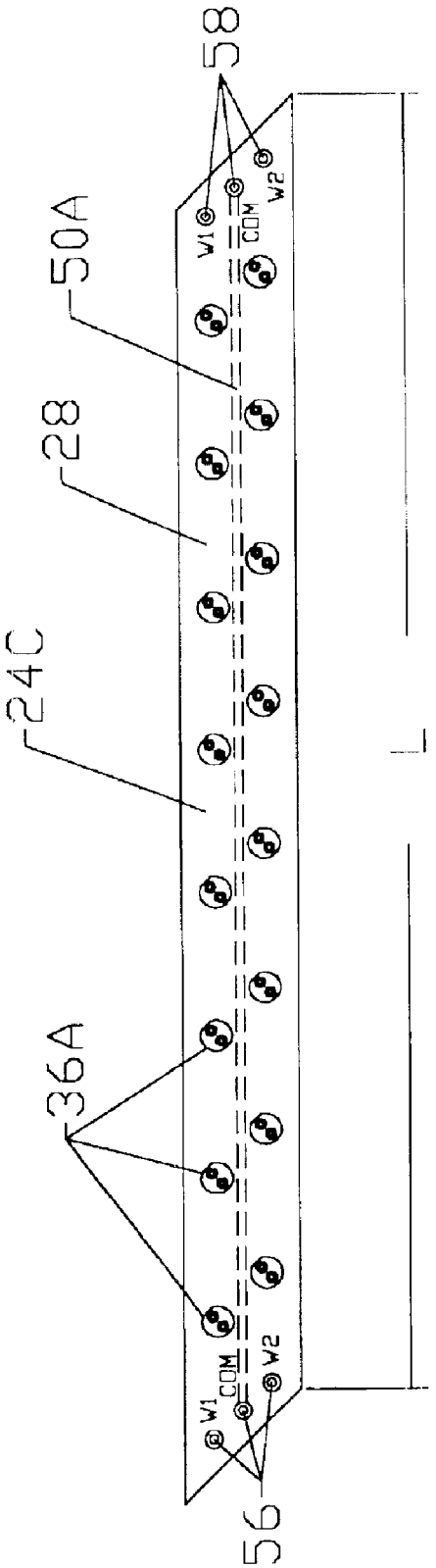

FIG. 7

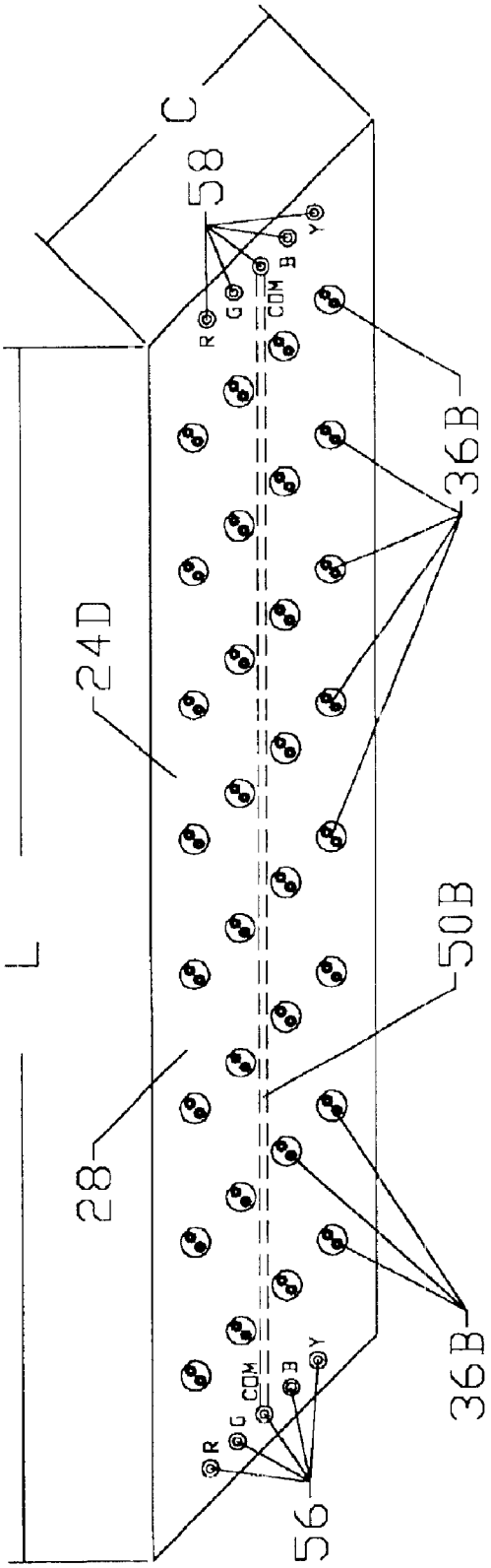

FIG. 8

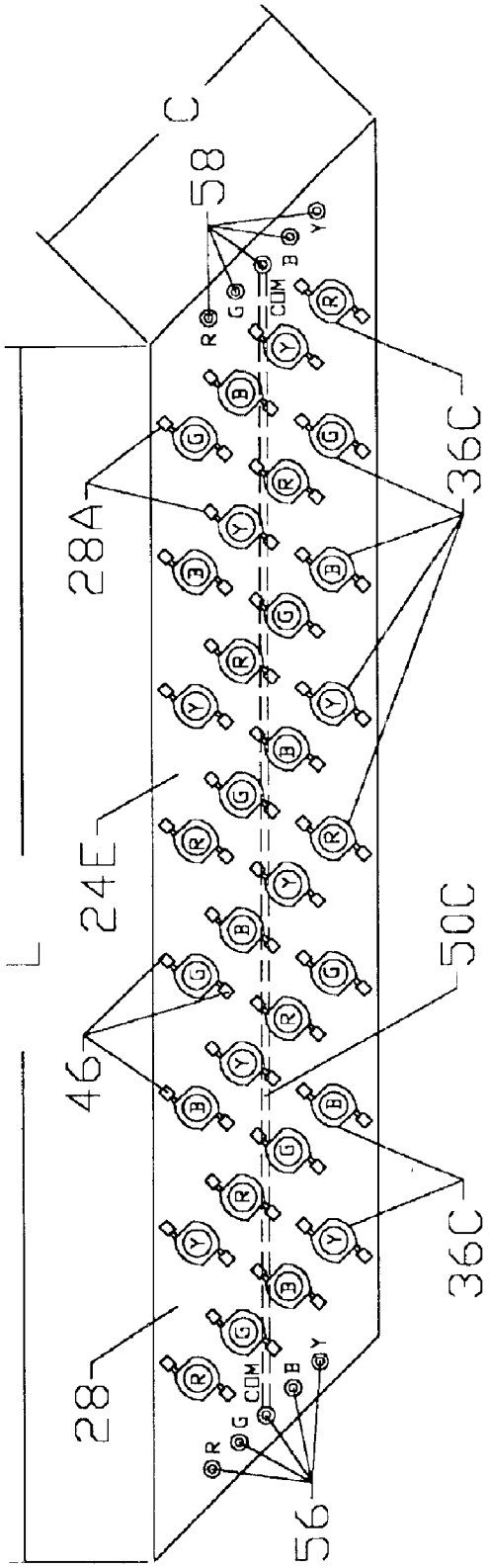

FIG. 9

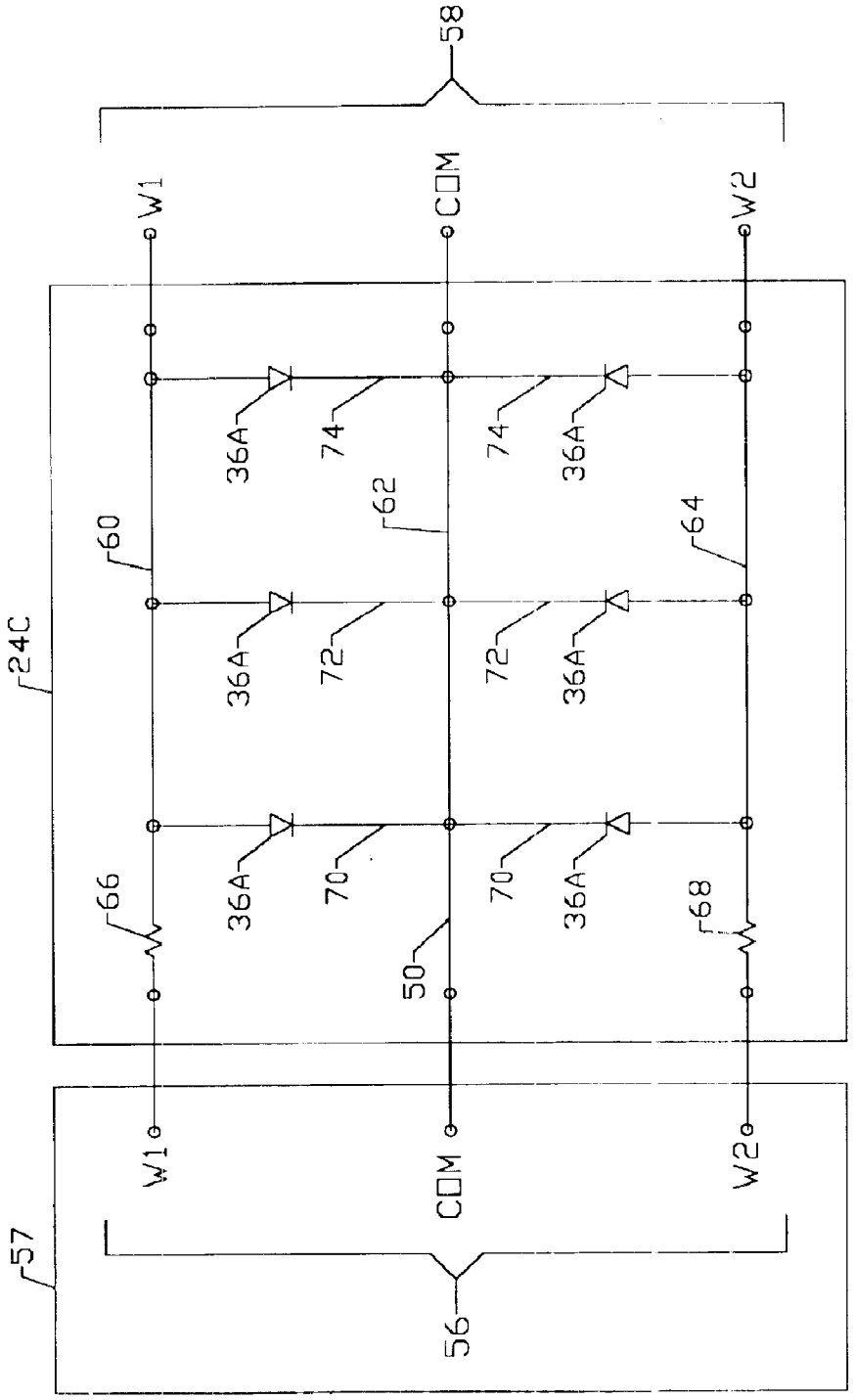
58
W1
COM
W2
36A
74
74
36A
62
60
64
24C
36A
72
72
36A
36A
70
70
36A
66
50
68
W1
COM
W2
57
56

FIG. 10

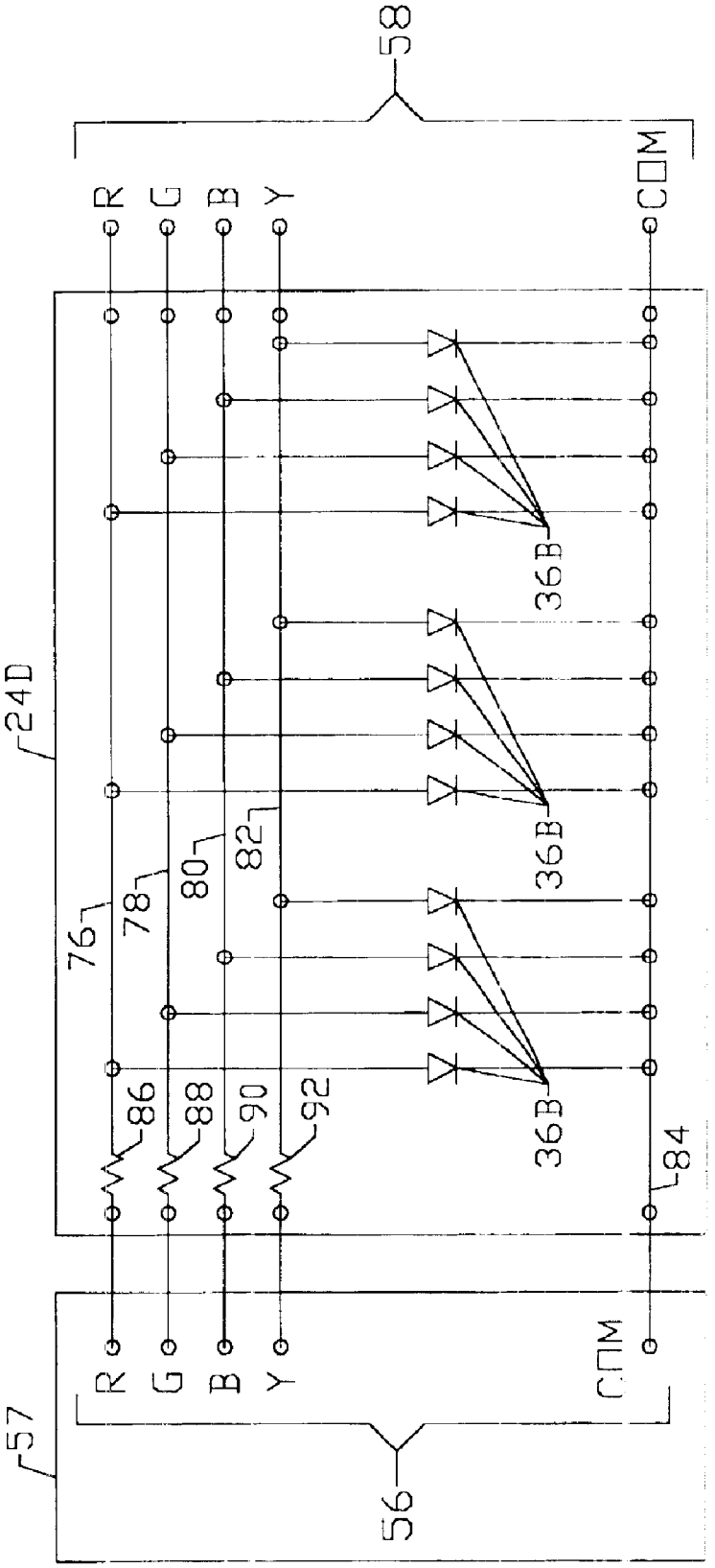

FIG 11

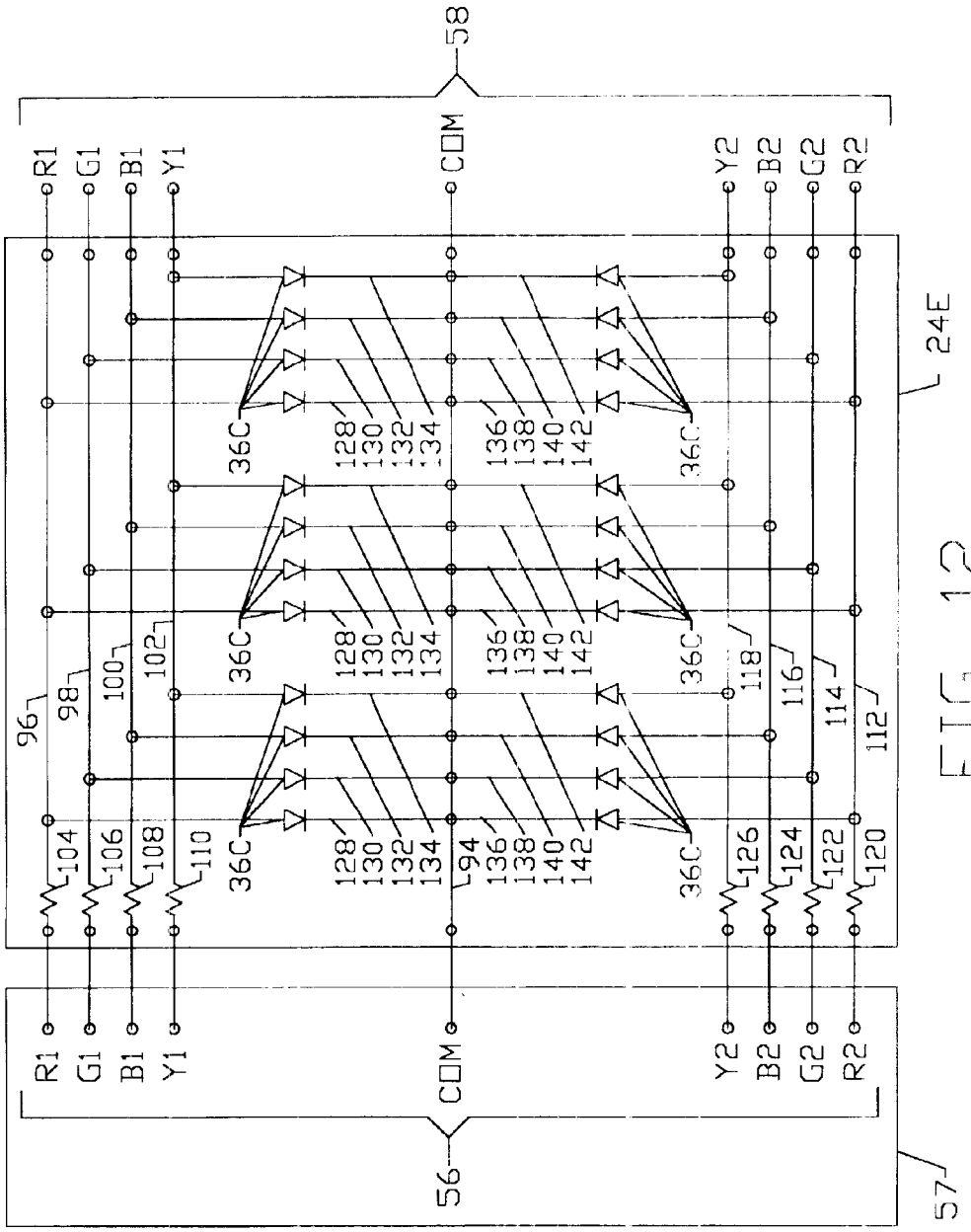
58
R1
G1
B1
Y1
COM
Y2
B2
G2
R2
24E
36C
128
130
132
134
136
138
140
142
96
98
100
102
104
106
108
110
94
118
116
114
112
126
124
122
120
56
57

FIG 12

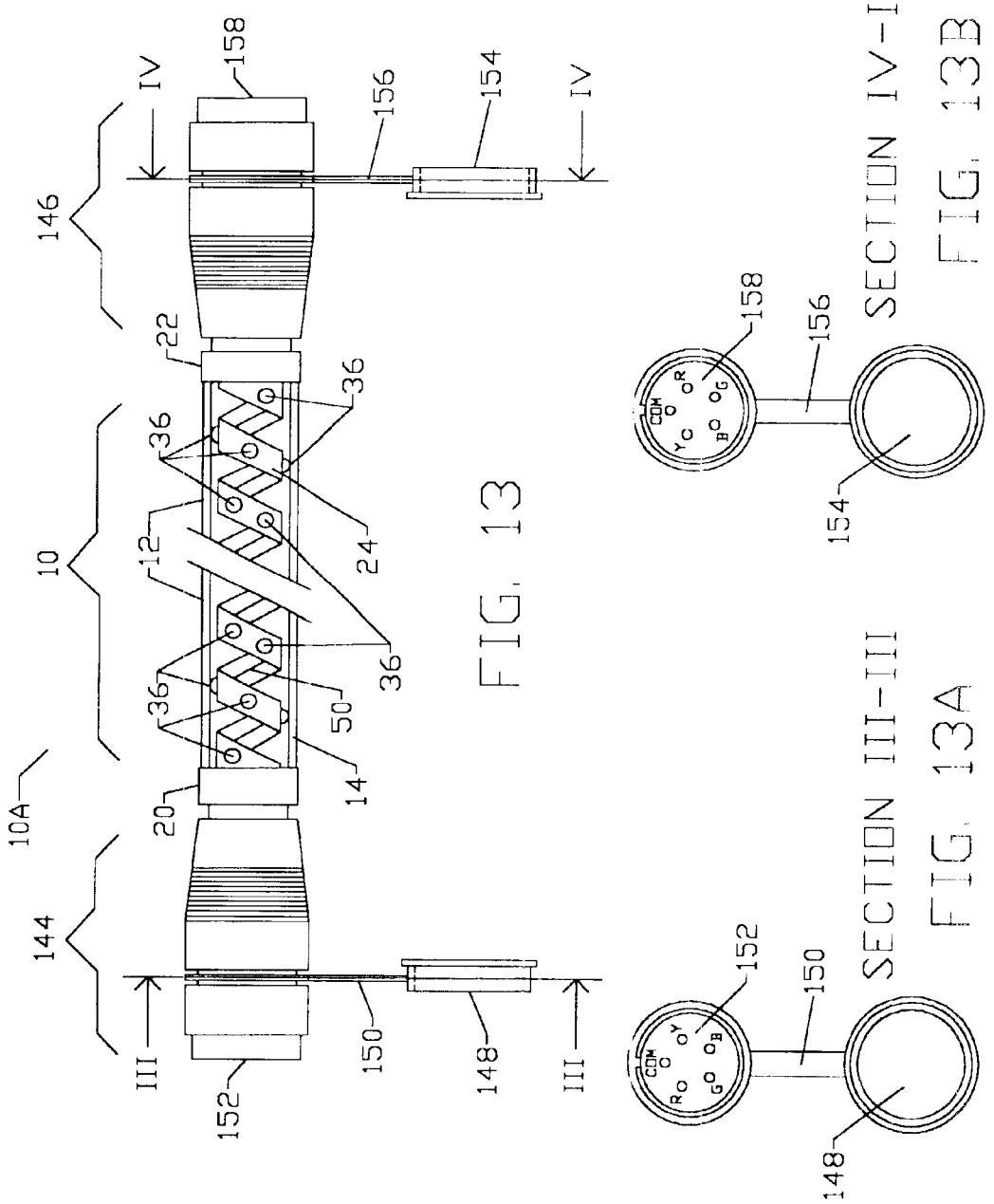

FIG. 13

FIG. 13A

FIG. 13B

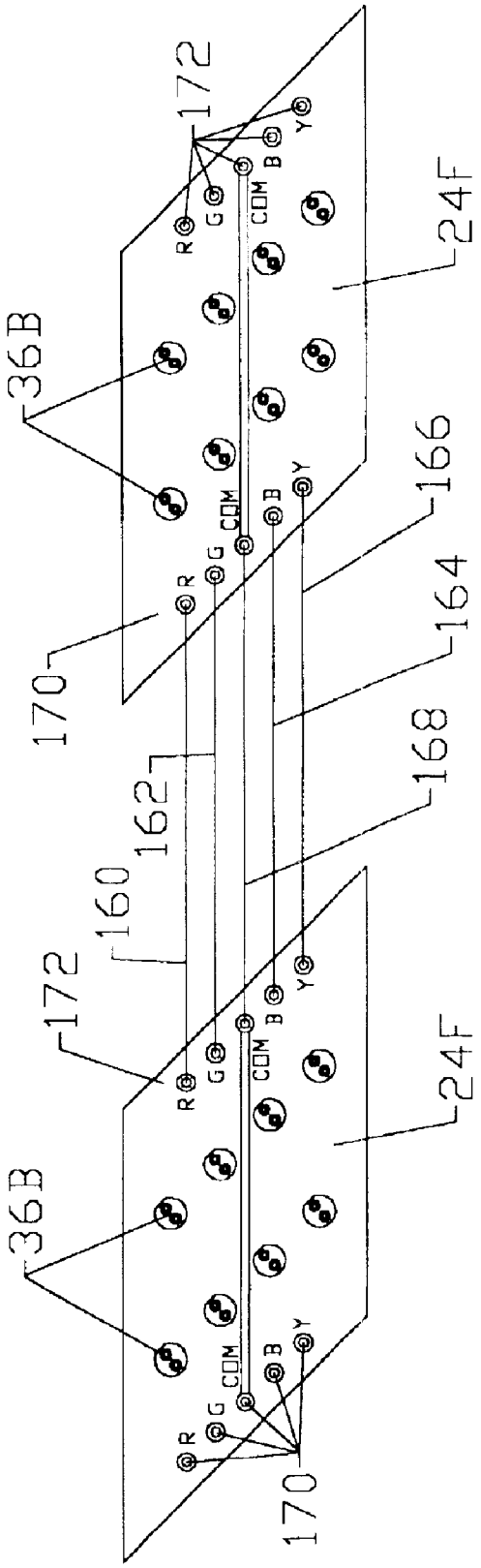
172
R
G
COM
B
Y
24F
36B
166
164
170
168
162
160
172
R
G
COM
B
Y
24F
36B
R
G
COM
B
Y
170

FIG. 14

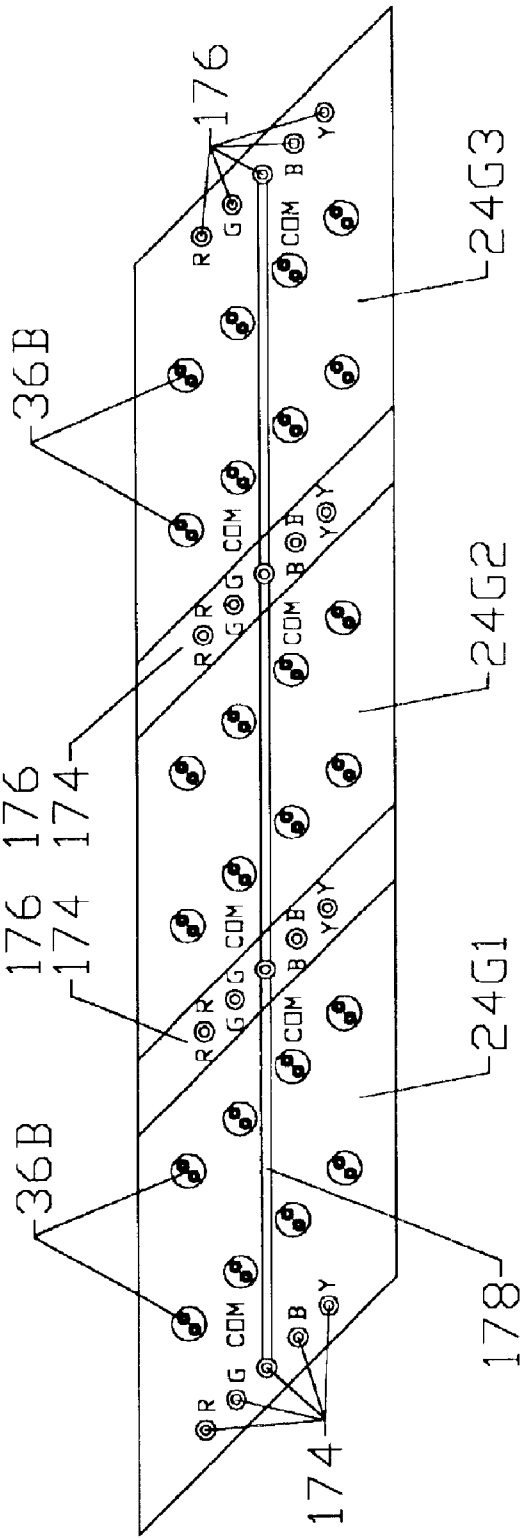

FIG. 15

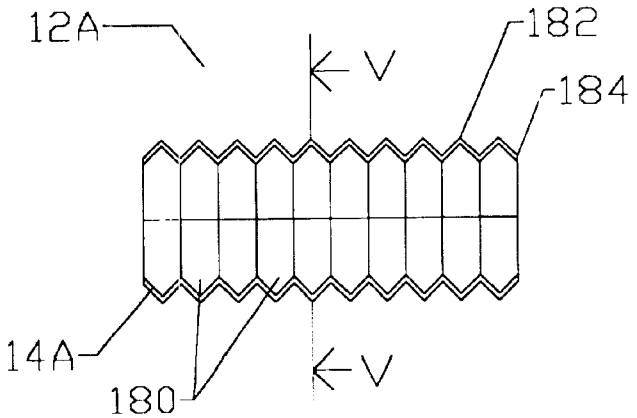

FIG. 16

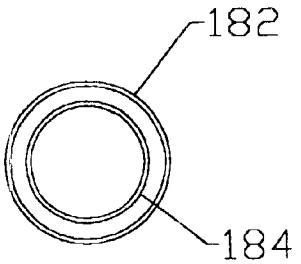

SECTION V-V

FIG. 16A

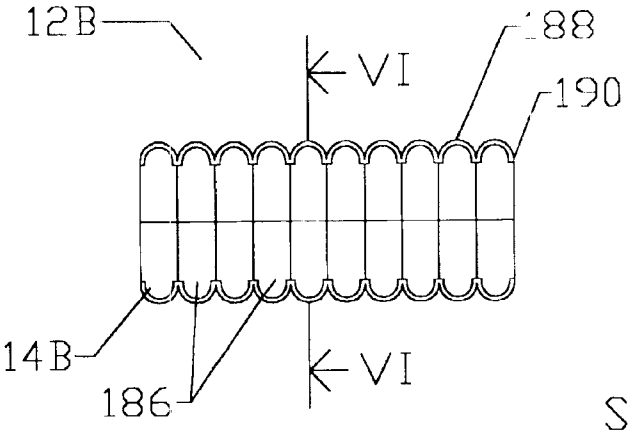

FIG. 17

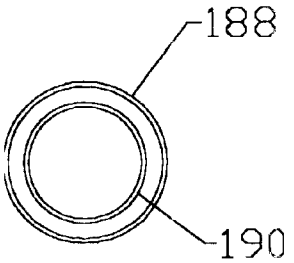

SECTION VI-VI

FIG. 17A

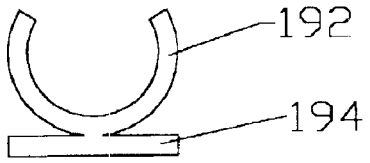

FIG. 18A

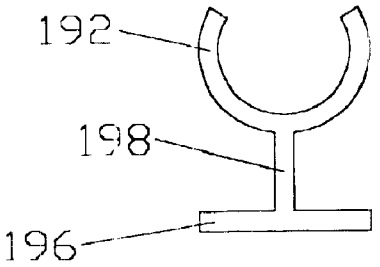

FIG. 18B

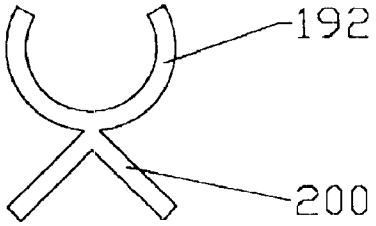

FIG. 18C

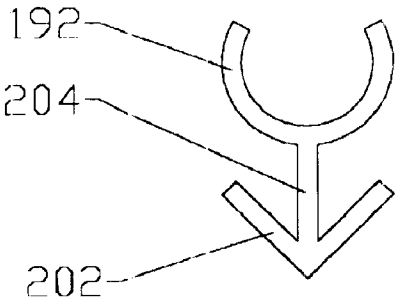

FIG. 18D

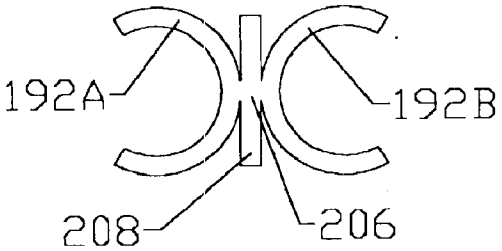

FIG. 18E

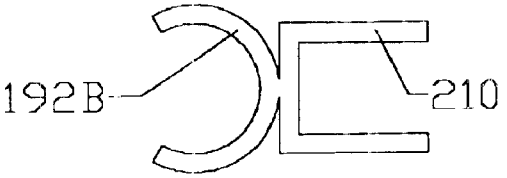

FIG. 18F

FLEXIBLE LED LIGHTING STRIP

FIELD OF THE INVENTION

This invention is directed to flexible lighting strips.

BACKGROUND OF THE INVENTION

Flexible lighting strips, also called rope lights, are used for lighting both interior and exterior structures and can be used for sign applications. Existing lighting strips do not allow a combination of flexibility and rigidity desired by users to configure rope lights into any selected configuration with ease. Color chasing and color mixing capabilities are limited.

Prior art in the sign industry includes the use of neon lamps, fluorescent lamps, and incandescent lamps. The drawbacks for neon and fluorescent lamps include difficulty in starting in cold temperatures, dangerous high-voltage operation, and the presence of mercury that in turn creates an environmental hazard. Incandescent lamps generate a large amount of heat, have poor resistance to vibration, have short lamp life, and consume large amounts of energy with the result that most of their light energy is wasted as infrared heat energy.

Light emitting diode (LED) technology makes possible the replacement of short lamp life with longer lamp life and energy deficient light sources using energy efficient light sources that are long lived and cooler running. Color output LEDs can emit red (R), green (G), blue (B), and yellow (Y) light, or white light. Brighter color mixing with better color rendering than in prior art technology is a result. Color additive mixing of LEDs can produce the secondary colors cyan (C), yellow (Y), magenta (M) and white light. Mixing green and blue gives cyan. Mixing green and red gives yellow. Mixing red and blue gives magenta. Mixing RGB plus a separate Y generates a truer white light with better color rendering than just combining RGB.

It is noted that color gel filters are not necessary with RGBY color mixing light technology, which in itself generates the full light spectrum. Color efficiency in LEDs is much better than incandescent filament lamps, which require a specific color gel or filter. This can waste up to about 90 percent of the light energy of incandescent lamps. LEDs on the other hand deliver 100 percent of their energy as light and further emit a more intense selected colored light. This energy efficiency of LEDs extends to the emitting of white light as well. There are two ways of using LEDs to produce white light in this invention: 1) using LEDs that produce white light exclusively, or 2) using LEDs to emit RGBY at the same time and at equal output intensities.

Besides generating less heat, LEDs are more energy efficient, more durable, and last longer than conventional light sources. The solid state design of LEDs makes them durable and robust and gives them the capability of withstanding shock, vibration, frequent power cycling and operation in extreme cold and hot temperatures. LEDs have an average usable life of typically 100,000 hours or more when operated within design specifications. LEDs are mercury free. LED technology now includes multi-chip and multi-light LED arrays, so that LEDs are available in a wide range of colors in unique combinations. Clearly for many applications LEDs now compete directly with incandescent filament, neon, and fluorescent light sources.

In the preferred embodiment of the present invention, light-emitting diodes in different colors can be mounted onto a flexible circuit board that is twisted into a helix and inserted into a flexible tubular housing. This unique combination of a flexible circuit board and a flexible tubular

housing will allow for a more versatile and improved flexible shape retaining rope light. In addition, the ease of manufacturability and full 360-degree omni-directional and uniform light dispersion is very important. Previous inventions have been developed to try and accomplish this task, but have not been successful.

Color Kinetic's iColor Accent, Cove, and Fresco line of LED fixtures are available only in rigid linear transparent or translucent housings that offer no flexibility or versatility at all. To achieve a circular arrangement, for example, multiple linear fixtures have to be aligned edge to edge to approximate the curved outline. The iColor Accent, Cove, and Fresco fixtures also use rigid circuit boards with the LEDs mounted perpendicular to the circuit boards, therefore the light dispersion output from the LEDs are generally in the forward direction offering only at most approximately 180 degrees of coverage.

Gelcore Lighting offers their Tetra LED System and Lumileds Lighting offers their Chip Strip Contour Lighting System for signage applications. Both systems consist of a series of individual LED modules mounted onto rigid circuit board disks. Each LED module that is mounted onto a rigid circuit board disk is attached by power leads to an adjacent similarly configured LED module and rigid circuit board disk, and so on. Although the power leads offer flexibility as far as configuring the location of the LED modules themselves, there is no overall protective housing for all the modules. Also, since the LEDs are mounted onto rigid circuit boards, again the light dispersion output from the LEDs are generally in the forward direction also offering only approximately no more than 180 degrees of coverage.

In U.S. Pat. No. 6,394,623 issued to Tsui in May 28, 2002, a translucent flexible rope light is disclosed and methods of forming and using the same. The invention uses exposed main conductors consisting of multi-strand wire connected to a plurality of spaced-apart lights, both extending substantially in parallel for substantially the entire length of the rope light. A flexible sheath having a continuous annular shape encases the conductors and plurality of lights. Although this invention uses a flexible tubular housing, the plurality of lights are disclosed as discrete lights wired directly together in series with the main conductors and plurality of lights positioned in a physical parallel orientation with each other throughout the length of the rope light. This invention does not employ a flexible circuit board and the configuration will not allow for a full dispersion of light output from the plurality of lights as required.

In U.S. Pat. No. 6,394,626 issued to McColloch in May 28, 2002, a flexible light track for signage is disclosed consisting of a plurality of modules separately and mechanically connected to a flexible frame to which light emitting diodes and positive and negative leads are mounted to each module. The modules are designed to be mounted flat onto the flexible frame. As this invention was designed for signage use only, an integral flexible tubular housing is not included. As before, this configuration will not allow for a full dispersion of light output from each light emitting diode mounted to each module.

Lastly, in U.S. Pat. No. 6,406,166 issued to Ko in Jun. 18, 2002, a chasing rope light is disclosed using a flexible core tube with at least two separate series string of light emitting diodes each individually connected to a diode rectifier. This rope light was designed to operate on an alternating power source such that only one series string of light emitting diodes will turn on at a time, thereby creating the chasing effect. Although this invention calls for a flexible core tube housing, it also does not employ a flexible circuit board. The major disadvantage here being not all the light emitting diodes in the separate series strings can be turned on at the same time. This invention functions only as a chasing rope light.

A light emitting diode light apparatus in accordance with the present invention that is a substantial improvement over the prior art mentioned above will be appreciated by those skilled in the art from the following summary and detailed description of the invention.

SUMMARY OF THE INVENTION

An object of the present invention is to provide a flexible LED lighting strip that can accomplish the functions of known rope lights with greater energy efficiency and omni-directional light dispersion with color mixing, color changing, and color chasing capabilities.

It is a further object of the present invention to provide a flexible LED lighting strip that is both flexible and versatile, and capable of being configured into numerous configurations and of maintaining the selected configuration.

It is yet another object of the present invention to provide a method of manufacture of a flexible LED lighting strip that is efficient and cost effective.

LEDs are available in different shapes and sizes. The LEDs used in the following examples are high luminous intensity lamp types available from Nichia Corporation. They are also readily available from other sources among which are Gelcore Lighting LLC, a joint company comprising GE Lighting and EMCORE Corporation and Lumileds Lighting LLC, a joint venture between Agilent Technologies (formerly with Hewlett Packard) and Philips Lighting. The LEDs include the 5 mm discrete axial lead types and Surface Mount Device (SMD) LED devices.

A minor drawback at present is the individual retail price of a single white LED. The cost decreases a bit when purchasing in larger quantities, but the overall cost is still high. At the present time of this application a single white LED from Nichia Corporation will cost $0.70 even when buying in quantities of 100,000 pieces. The cost of using LEDs can be justified in view of the energy savings, their lower current draw, the low profiles that can be achieved, and their low operating temperature. LEDs are also maintenance free and have a longer lamp life. The price of individual LEDs will fall as their luminous intensity and performance will continue to increase.

In addition, the direct generation of colored light by the selection of the type of LED used will make redundant the need for colored lenses with consequent improvements in efficiency, visibility, and cost. One particular use is in display and general lighting applications, where the long life characteristics of LEDs, their suitability for repetitive switching, their low operating temperature, and their high efficiency all contribute to qualify them for such use.

Those skilled in the art will further appreciate the improvements and advantages relating to the use of LEDs combined with the present invention upon reading the detailed description, which follows in conjunction with the following drawings.

BRIEF DESCRIPTION OF THE DRAWINGS

FIG. **1** is a perspective view of the flexible lighting strip in accordance with the present application;

FIG. **2** is a view taken through plane I—I in FIG. **1** perpendicular to the axis of the flexible circuit board and the flexible tubular housing, through LEDs, and also showing a stiffening wire embedded in the flexible circuit board;

FIG. **3** is a perspective view taken in isolation of the flexible circuit board in a compressed mode with LEDs mounted thereon as shown in FIG. **1**;

FIG. **4** is a perspective view taken in isolation of the helical flexible circuit board shown in FIG. **3** in the expanded mode in preparation for assembly;

FIG. **5** is a view taken through plane II—II in FIG. **3** showing the stiffening wire;

FIG. **6** is a flat view of a flexible circuit board prior to the mounting of LEDs, electrical circuitry and electrical components showing the outside surface of the circuit board and prior to it being formed into a compressed helical circuit board such as that shown in FIG. **3**;

FIG. **7** shows a top view of a flexible circuit board in a flat mode prior to being formed into a compressed helical configuration such as seen in FIG. **3** with white LEDs mounted and held thereon, and also showing a stiffening wire embedded therein;

FIG. **8** shows a top view of a flexible circuit board in a flat mode prior to being formed into a compressed helical configuration such as seen in FIG. **3** with RGBY LEDs mounted and held thereon, and also showing a stiffening wire embedded therein;

FIG. **9** shows a top view of a flexible circuit board in a flat mode prior to being formed into a compressed helical configuration such as seen in FIG. **3** with RGBY SMD LEDs mounted and held thereon, and also showing stiffening wire embedded therein;

FIG. **10** is a schematic electrical circuit diagram showing the external power supply and controller for a chasing circuit for the white LEDs shown in FIG. **7** for the most part mounted onto the flexible circuit board;

FIG. **11** is a schematic electrical circuit diagram showing the external power supply and controller for color mixing and color changing of the RGBY LEDs shown in FIG. **8** for the most part mounted onto the flexible circuit board;

FIG. **12** is a schematic electrical circuit diagram showing the external power supply and controller for color mixing, color changing, and color chasing of the RGBY SMD LEDs shown in FIG. **9** for the most part mounted onto the flexible circuit board;

FIG. **13** is a broken side view of the flexible lighting strip as fully assembled including a transparent tubular housing with a flexible helical circuit board with LEDs mounted thereon, opposed end caps, a male plug connector and an opposed female socket connector, and opposed dust cap covers;

FIG. **13**A is an end view taken through line III—III in FIG. **13**;

FIG. **13**B is an end view taken through line IV—IV in FIG. **13**;

FIG. **14** shows two flexible parallelogram-shaped flat circuit boards spaced apart in a flat mode in a spaced electrically connected relationship with electrical wiring between them prior to being formed into a helical configuration for insertion into a tubular housing such as shown seen in FIG. **1**;

FIG. **15** shows three flexible parallelogram-shaped flat circuit boards in an overlapping cascading relationship in a flat mode prior to being formed into a helical configuration for subsequent insertion into a tubular housing such as shown in FIG. **1**;

FIG. **16** is an alternate tubular housing with a triangular ribbed outer surface;

FIG. **16**A is a view taken through line V—V in FIG. **16**;

FIG. **17** is an alternate tubular housing with a hemispherical ribbed outer surface;

FIG. **17**A is a view taken through line VI—VI in FIG. **17**;

FIG. **18**A is an end view of a hemispherical grip for the flexible lighting strip shown in FIG. **1** with a flat holding base;

FIG. **18**B is an end view of a hemispherical grip for the flexible lighting strip shown in FIG. **1** with a flat holding base connected to the hemispherical grip by a joining member;

FIG. **18**C is an end view of a hemispherical grip for the flexible lighting strip shown in FIG. **1** connected to an outside corner right-angle shaped holding base;

FIG. **18**D is an end view of a hemispherical grip for the flexible lighting strip shown in FIG. **1** connected to an inside corner right-angle shaped holding base;

FIG. **18**E is an end view of a double-sided hemispherical grip for the flexible lighting strip shown in FIG. **1** each connected to a joining member positioned between them; and

FIG. **18**F is an end view of a hemispherical grip for the flexible lighting strip shown in FIG. **1** connected to a U-shaped holding base.

DETAILED DESCRIPTION OF THE INVENTION

The present invention will now be described more fully with reference to the accompanying drawings where like numbers refer to like elements throughout.

A flexible lighting strip **10** is shown in FIG. **1**. Flexible lighting strip **10** is a shortened version of a lighting strip of what is generally a more extended flexible lighting strip known in the art.

Flexible lighting strip **10** includes an elongated flexible tubular housing **12** having a smooth translucent shell, or in particular a transparent tubular shell **14** as shown, and opposed tubular ends **16** and **18** having connector end caps **20** and **22**, respectively, (seen in FIG. **13**) secured thereto and a flexible helical circuit board **24** configured as a open helix positioned in tubular housing **12**. Flexible helical circuit board **24** is configured as a spiral helical spring having opposed continuous interior and exterior surfaces **26** and **28**, respectively, and having helical circuit board opposed ends **30** and **32** positioned at tubular wall opposed ends **16** and **18**, respectively. Flexible helical circuit board **24** and tubular housing **12** are both circular in cross-section and have a coextensive axis **34**. A number of LEDs **36** are mounted on flexible helical circuit board **24** at equal intervals on exterior surface **28**.

FIG. **2** shows a sectional plane I—I taken through flexible lighting strip **10** perpendicular to coextensive axis **34**. A cylindrical space **38** is formed between flexible helical circuit board **24** and tubular shell **14**. Each LED **36** includes a base portion **40**, a body portion **42**, and a lens portion **44**. Each LED **36** has a LED centerline **48** that is perpendicular to coextensive axis **34**. Lens portion **44** is adjacent to tubular shell **14**. Stiff LED leads **46** mounts LEDs **36** to flexible helical circuit board **24** and electrically connects LEDs **36** to the electrical connections on flexible helical circuit board **24**. LEDs **36** are positioned in cylindrical space **38** with lens portions **44** being adjacent to tubular shell **14**. LEDs **36** are so positioned and aligned that the six LEDs **36** shown in FIG. **2** are a result of the regular overlapping alignment of the total of LEDs **36** located on flexible helical circuit board **24**.

Flexible helical circuit board **24** is preferably made of a polyimide plastic material that can withstand the high temperatures that can occur during the process of soldering LED leads **46** thereto. A thickness of approximately a minimum of 0.01 inches of polyimide material will allow the flexibility that is integral with flexible lighting strip **10**, and in addition will offer the rigidity required to maintain the shape of flexible helical circuit board **24**.

A stiffening member particularly shown as stiffening wire **50** embedded the entire length of helical circuit board **24** between circuit board ends **30** and **32** is shown in FIG. **1** and further shown in a cross-section II—II of a single flexible spiral in FIG. **5** where stiffening wire **50** is positioned generally midway between interior surface **26** and exterior surface **28**. It can be appreciated by someone skilled in the arts that the stiffening wire **50** can be positioned on interior surface **26** and/or on exterior surface **28**. Stiffening wire **50** adds both added strength to flexible helical circuit board **24** and further provides the rigidity to maintain the entire flexible lighting strip **10** in the shape it is placed, for example, in a curved or looped mode, during the time of its use. Built-in stiffening wire **50** is made of metal for strength and rigidity, and as such can be electrically connected to the common or the negative DC voltage to each LED **36**. Also, because stiffening member **50** is preferably made of metal, it can act as a heat sink to draw the heat generated by the LEDs **36** through the LED leads **46**. LED leads **46** will extend through the entire flexible helical circuit board **24** from exterior surface **28** through interior surface **26** and held in place with solder **28**A. Stiffening wire **50** is preferably made of an electrically conductive metal. Such electrically conductive metal can be, for example, substantially aluminum or copper.

Now, referring back to FIG. **3** shows compressed helical circuit board **24**A in isolation prior to being inserted into tubular housing **12** in the manufacturing process, or assembly of flexible lighting strip **10**. LEDs **36** are shown already connected to and positioned on compressed helical circuit board **24**A, and also electrically connected to the electrical circuitry thereon in accordance with the electrical wiring diagrams shown in any of FIGS. **10**, **11**, and **12** as described later on.

In assembly, the compressed helical circuit board **24**A, which is cylindrical in configuration as shown in FIG. **3**, is pulled or extended into the uncompressed mode or configuration shown as flexible helical circuit board **24** in FIG. **4**. The outer diameter D_2 of uncompressed flexible helical circuit board **24**, which is shown in FIGS. **2** and **4**, is reduced relative to the slightly larger diameter d_1 in the compressed helical circuit board **24**A seen in FIG. **3**. In the uncompressed or expanded mode, flexible helical circuit board **24** is configured as a true helix with a space or gap **52**, defined between each helical spiral **54** so that flexibility of flexible helical circuit board **24** is achieved. Preferably gaps **52** shown in FIG. **4** between each helical spiral **54** is equal to the width of the compressed helical circuit board **24**A for maximum flexibility. The flexible lighting strip **10** can be laid out so that there is adequate omni-directional light coverage around the complete circumference of the elongated flexible tubular housing **12**.

The method of constructing compressed helical circuit board **24**A is illustrated in conjunction with FIG. **6**, which shows a flat mode representation of a parallelogram-shaped flat mode circuit board **24**B in preparation for the construction of flexible helical circuit board **24**. Flat mode circuit board **24**B is made of a flexible electrically non-conductive and high-temperature resistant plastic material such as, for example, polyimide. FIG. **6** shows flat mode circuit board **24**B with the exterior surface **28** of flexible helical circuit board **24** facing upwards. The following designations and formulas refer to the flat mode representation of flat mode circuit board **24**B of FIG. **6**.

Short edges C of parallelogram-shaped flat mode circuit board **24**B equals the circumference C of compressed helical circuit board **24**A of FIG. **3**=d_1×pi (3.1415927).

From FIG. **3**, long edges L of parallelogram flat mode equals length L' of compressed helical circuit board **24**A divided by sine A_1=sine 45°=0.7071.

Flat mode circuit board **24**B shown in FIG. **6** has an exterior surface **28** facing upwards and configured as a parallelogram in preparation for formation to a cylindrical compressed circuit board such as compressed helical circuit board **24**A shown in FIG. **3**.

Parallelogram-shaped flat mode circuit board **24**B includes two long opposed parallel edges L and two short

opposed parallel edges C that form opposed 45° angles A_1 and A_2 and opposed 135° angles B_1 and B_2. It can be appreciated by someone skilled in the arts to create a parallelogram-shaped flat mode circuit board with acute angles other than 45° and obtuse angles other than 135°. The number of helical spirals **54**, such as, for example, the six helical spirals **54** as seen in FIG. **3**, is determined by length L' divided by the circumference C.

The width W of the compressed helical circuit board **24**A is equal to the circumference C multiplied by the sine of angle A_1 or A_2 or 45° in this example. Taking this into consideration, in order to compensate for the open helical spirals, the length L' of compressed helical circuit board **24**A as shown in FIG. **3** and the starting diameter d_1 of compressed helical circuit board **24**A should be doubled. For the preferred embodiment of the present invention of flexible lighting strip **10** as shown in FIGS. **1** and **2**, Diameter D_2 of uncompressed flexible helical circuit board **24** is equal to the inside diameter D_1 of flexible tubular housing **12** shown in FIG. **1** minus twice the height of the LEDs **36** including LED lead **46** shown in FIG. **2**.

A further example of flat mode circuit board **24**B is shown in FIG. **7** as flat mode circuit board **24**C where an example of **16** white LEDs **36**A are shown located on both sides of stiffening wire **50**A that extends substantially the entire length L between short sides C. A power input **56** and a power output **58** are mounted in flat circuit board **24**C at opposed short ends C for white LEDs **36**A. White LEDs **36**A are mounted perpendicular to exterior surface **28**.

Another example of flat mode circuit board **24**B is shown in FIG. **8** as flat mode circuit board **24**D where an example of 32 RGBY (color) LEDs **36**B are shown located on both sides of a stiffening wire **50**B that extends the length L between short sides C. A power input **56** and a power output **58** both known in the art are mounted in flat circuit board **24**D at opposed short ends C for RGBY LEDs **36**B. RGBY LEDs **36**B are mounted perpendicular to exterior surface **28**.

Another example of flat mode flexible circuit board **24**B is shown in FIG. **9** as flat mode circuit board **24**E where an example of 32 RGBY (color) SMD LEDs **36**C are shown located on both sides of a stiffening wire **50**C that extends the length L between short sides C. A power input **56** and a power output **58** are mounted in flat circuit board **24**E at opposed short ends C for RGBY SMD LEDs **36**C. RGBY SMD LEDs **36**C are mounted perpendicular to exterior surface **28**.

Surface mounted device or SMD LEDs are semiconductor devices that have leads that are soldered usually on the same side of the circuit board as the electrical components. SMD LEDs are smaller and have a greater beam spread than standard discrete axial LEDs.

LED leads **46** for RGBY SMD LEDs **36**C as shown in FIG. **9** are mounted directly to helical circuit board **24** on exterior surface **28**. SMD LED leads **46** and RGBY SMD LEDs **36**C themselves are held in place with solder **28**A.

FIG. **10** is a schematic electrical circuit diagram showing the external power supply and controller **57** for a chasing circuit for the white LEDs **36**A shown in FIG. **7** for the most part mounted onto the flat mode circuit board **24**C. An external LED power supply and controller **57** provides two separate control voltages **W1** and **W2** to drive LEDs **36**A. A single white LED **36**A is connected in a parallel configuration with other single white LED **36**A. Because voltages **W1** and **W2** are independent of each other, they can be turned on and off individually and at full intensity to create an alternating chasing effect. Also, the external LED power supply and controller **57** can vary the voltages **W1** and **W2**, thereby varying the current going into each white LED **36**A. This in turn will cause all white LEDs **36**A connected to voltages **W1** or **W2** to dim and/or to fade. Schematically indicated flat circuit board **24**C has mounted thereon a first wire lead **60**, a common (COM) second lead wire **62**, and a third lead wire **64** all of which extend between external power input **56** and external power output **58** known in the art. Common (COM) second lead wire **62** is positioned between first and third lead wires **60** and **64**. First and third lead wires **60** and **64** have optional resistors **66** and **68**, respectively, mounted thereto. Optional resistors **66** and **68** are provided to limit the current seen by each LED **36**A connected in parallel. Parallel cross-lead wires **70**, **72** and **74** are connected to first lead wire **60**, common (COM) second lead wire **62**, and third lead wire **64**. Cross-lead wire **70** is positioned in parallel to second and third cross-lead wires **72** and **74**. A first pair of white LEDs **36**A is mounted to cross-lead **70** on either side of common (COM) second lead wire **62** with current passing to common (COM) second lead wire **62**. A second pair of white LEDs **36**A is mounted on cross-lead **72** in parallel connection with white LEDs **36**A on cross-leads **70** and **74** on either side of common (COM) second lead wire **62** with current passing to common (COM) second lead wire **62**. A third pair of white LEDs **36**A is mounted on cross-lead **74** in parallel connection with white LEDs **36**A on cross-leads **70** and **72** on either side of common (COM) second lead wire **62** with current passing to common (COM) second lead wire **62**. Six white LEDs **36**A are shown as examples of white LEDs in parallel connection ready for chasing control, but many more white LEDs **36**A can be mounted to flat mode circuit board **24**C in accordance with the present invention.

FIG. **11** is a schematic electrical circuit diagram showing the external LED power supply and controller **57** for color mixing and color changing of the 32 RGBY LEDs **36**B shown in FIG. **8** for the most part mounted onto flat circuit board **24**D. For purposes of illustration, FIG. **11** shows 12 RGBY LEDs **36**B, but it is to be understood that the same electrical schematic relationship would apply to the 32 RGBY LEDs **36**B shown in FIG. **8**. Schematically indicated flat circuit board **24**D has mounted thereon a first R LED positive voltage lead wire **76**, a second G LED positive voltage lead wire **78**, a third B LED positive voltage lead wire **80**, a fourth Y LED positive voltage lead wire **82**, and a fifth common (COM) LED negative voltage lead wire **84**, all of which extend in parallel relationship between external power input **56** and external power output **58**. Optional resistors **86**, **88**, **90**, and **92** are positioned on first R LED positive voltage lead wire **76**, second G LED positive voltage lead wire **78**, third B LED positive voltage lead wire **80**, and fourth Y LED positive voltage lead wire **82**, respectively. LED positive voltage lead wires **76**, **78**, **80**, and **82** are in electrical connection with red, green, blue, and yellow or RGBY LEDs **36**B, respectively, which are each connected to fifth common (COM) LED negative voltage lead wire **84**. FIG. **11** shows first, second, and third sets of RGBY LEDs **36**B all connected in this manner. It is to be understood that additional sets of RGBY LEDs can be added in the same manner as required.

FIG. **12** is a schematic electrical circuit diagram showing the external LED power supply and controller **57** for color mixing, color changing, and color chasing control of the RGBY SMD LEDs **36**C shown in FIG. **9** for the most part mounted onto circuit board **24**E. For purposes of illustration, FIG. **12** shows 24 RGBY SMD LEDs **36**C, but it is to be understood that the same electrical schematic relationship would apply to the 32 RGBY SMD LEDs **36**C shown in FIG. **9**. Schematically indicated flat circuit board **24**E has mounted thereon a central common (COM) LED negative voltage lead wire **94** extending between external power input **56** and external power output **58**. A first set of color control includes a **R1** LED positive voltage lead wire **96**, a **G1** LED positive voltage lead wire **98**, a **B1** LED positive

voltage lead wire **100**, and a Y1 LED positive voltage lead wire **102** that extend between external power input **56** and external power output **58** each having an optional resistor **104**, **106**, **108**, and **110**, respectively. A second set of color control includes a R2 LED positive voltage lead wire **112**, a G2 LED positive voltage lead wire **114**, a B2 LED positive voltage lead wire **116**, and a Y2 LED positive voltage lead wire **118** that extend between external power input **56** and external power output **58** each having an optional resistor **120**, **122**, **124**, and **126**, respectively. A first three groups of RGBY SMD LED leads each group comprising R1 LED negative voltage lead **128**, G1 LED negative voltage lead **130**, B1 LED negative voltage lead **132**, and Y1 LED negative voltage lead **134** extend between central common (COM) LED negative voltage lead wire **94** and R1 LED positive voltage lead **96**, G1 LED positive voltage lead **98**, B1 LED positive voltage lead **100**, and Y1 LED positive voltage lead **102**, respectively. A second three groups of RGBY SMD LED leads each group comprising R2 LED negative voltage lead **136**, G2 LED negative voltage lead **138**, B2 LED negative voltage lead **140**, and Y2 LED negative voltage lead **142** extend between central common (COM) LED negative voltage lead wire **94** and R2 LED positive voltage lead **112**, G2 LED positive voltage lead **114**, B2 LED positive voltage lead **116**, and Y2 LED positive voltage lead **118**, respectively. In each group, R1 LED negative voltage lead **128** and R2 LED negative voltage lead **136** are connected at common (COM) LED negative voltage lead **94**; G1 LED negative voltage lead **130** and G2 LED negative voltage lead **138** are connected at common (COM) LED negative voltage lead **94**; B1 LED negative voltage lead **132** and B2 LED negative voltage lead **140** are connected at common (COM) LED negative voltage lead **94**; and Y1 LED negative voltage lead **134** and Y2 LED negative voltage lead **142** are connected at common (COM) LED negative voltage lead **94**. Three double groups of RGBY SMID LEDs **36**C are shown to illustrate the operation of the electrical system and additional groups of RGBY SMD LEDs **36**C can be added in accordance with the present invention. External LED power supply and controller can turn on the eight R1G1B1Y1R2G2B2Y2 color LED positive voltages individually or collectively to achieve color mixing and color changing, and in an alternating pattern to create a color chasing effect.

It should be noted that someone skilled in the art can arrange and electrically connect the LEDs in FIGS. **10**, **11**, and **12** as described herein in reverse order such that the main positive voltage power coming from the external power supply and controller **57** to drive each LED are supplied through the common (COM) wire lead and the individual negative voltages are now connected to each white or color LED input voltage wire lead.

A flexible lighting strip **10** is shown in a fully assembled form with hardware connections in FIG. **13** and indicated as assembled flexible lighting strip **10**A. The fully assembled flexible lighting strip **10**A includes hardware connectors. Fully assembled lighting strip **10**A includes flexible lighting strip **10** and connector end caps **20** and **22** mounted to opposed tubular ends **16** and **18**. An indoor/outdoor male pin connector **144** is mounted to connector end cap **20** and an indoor/outdoor female socket connector **146** is mounted to connector end cap **22**. Male pin connector **144** includes a removable dust cap cover **148** with a flexible cap holder **150** connected to male pin connector **144** for covering male pin connector end **152** is shown in FIG. **13**A. Female socket connector **146** includes a removable dust cap cover **154** with a flexible cap holder **156** connected to female socket connector **146** for covering female socket connector end **158** is shown in FIG. **13**B.

Fully assembled flexible lighting strip **10**A as shown in FIG. **13** includes flexible lighting strip **10** including transparent tubular housing **12** with tubular shell **14**, helical circuit board **24** mounted within tubular housing **12** to which are mounted a number of LEDs **36**. For example, a complete system of 100 feet of assembled flexible lighting strip **10**A can be made in units of 25 feet that is connected as follows: External LED power supply and controller **57** with a pigtail ending in a 5-pin (9-pin for a chasing circuit) female socket connector **146** is attached to the power input 5-pin (9-pin for a chasing circuit) male pin connector **144** of the first 25 feet of flexible lighting strip **10**A. This method of connection continues until all four 25 foot lengths of flexible lighting strips **10**A are all connected to form one complete 100 feet of flexible lighting strip **10**A. When a female socket connector **146** is connected to a male pin connector **144**, connector dust cap covers **148** and **154** are not used. Only the last connector in the fully assembled flexible lighting strip **10**A has the integral connector dust cap cover **154** snapped over the last female socket connector **146**. This completes the 100-foot assembly. It is noted that a special two-fer or Y-splitter cable can be used that basically splits the LED power supply and controller signal from external LED power supply and controller **57** into two lines for additional versatility.

Assembly of the fully assembled flexible lighting strip **10**A is in accordance with the following steps:

What is claimed is:

1. A method for making a flexible lighting device including the following steps:

a. providing a parallelogram-shaped flat circuit board having long edges and short edges with acute angles and obtuse angles, the flat circuit board having opposed interior and exterior surfaces, and further including a stiffening member embedded with the flat circuit board between the long edges and extending beyond the short edges;

b. mounting electrical circuitry including traces, solder pads and plated through holes, and related electronic components in preparation for a plurality of LEDs to be mounted to the exterior side of the flat circuit board;

c. securing the plurality of LEDs to the flat circuit board between the long sides and extending generally between the short sides, the LEDs having LED centerlines perpendicular to the flat circuit board;

d. connecting the LEDs to the electrical circuitry;

e. providing a flexible hollow tubular housing having a tubular housing length and a tubular housing inner diameter;

f. forming the flat flexible circuit board into a cylindrical and generally compressed helical circuit board having a predetermined number of compressed spirals with the LEDs extending outwardly from the compressed helical circuit board, so as to form a LED cross-diameter measured across the LEDs that is greater than the tubular housing inner diameter and having a compressed helical circuit board length that is less than the tubular housing length with a rigid pulling wire inserted into the hollow tubular housing with the ends of the rigid pulling wire extending out past opposed tube ends;

g. attaching one end of the rigid pulling wire extending out past one end of the hollow tubular housing to one end of the compressed helical circuit board; and

h. pulling the generally compressed helical circuit board into the tubular housing and stretching out the compressed helical circuit board so as to form the calculated number of spirals separated by gaps wherein the compressed helical circuit board now becomes a cylin-

drical uncompressed flexible helical circuit board having a helical circuit board axis aligned with the tubular housing axis to form a coextensive axis, and wherein the flexible helical circuit board is extended to a helical circuit board length that is generally the same as the tubular housing length and wherein the LED cross-diameter as measured across the LEDs is generally the same as the tubular housing **12** and the LED center lines are perpendicular to the coextensive axis.

2. The method as recited in claim **1**, including the following steps:

a. securing power input and power output terminals to the electrical circuitry of the helical circuit board and the LEDs; and

b. securing opposed end caps to said opposed ends of the tubular housing.

3. The method as recited in claim **2**, further including the steps of:

a. mounting a male pin connector to one of the end caps;

b. mounting a female socket connector to the other of the end caps;

c. mounting a removable dust cap cover with a flexible cap holder to said male pin connector and female socket connector.

* * * * *