US007948001B2

(12) **United States Patent**
Kamada et al.

(10) **Patent No.: US 7,948,001 B2**
(45) **Date of Patent: May 24, 2011**

(54) **LED LIGHTING FIXTURE**

(75) Inventors: **Kazuo Kamada**, Hirakata (JP); **Yasushi Nishioka**, Tsu (JP); **Youji Urano**, Ikeda (JP)

(73) Assignee: **Panasonic Electric Works, Co., Ltd.**, Osaka (JP)

(*) Notice: Subject to any disclaimer, the term of this patent is extended or adjusted under 35 U.S.C. 154(b) by 509 days.

(21) Appl. No.: **12/066,433**

(22) PCT Filed: **Sep. 20, 2006**

(86) PCT No.: **PCT/JP2006/318574**

§ 371 (c)(1),
(2), (4) Date: **Mar. 11, 2008**

(87) PCT Pub. No.: **WO2007/034803**

PCT Pub. Date: **Mar. 29, 2007**

(65) **Prior Publication Data**

US 2010/0148196 A1 Jun. 17, 2010

(30) **Foreign Application Priority Data**

Sep. 20, 2005 (JP) 2005-272878
Sep. 20, 2005 (JP) 2005-272883

(51) **Int. Cl.**
H01L 23/28 (2006.01)
H01L 23/373 (2006.01)

(52) **U.S. Cl.** **257/99**; 257/98; 257/100; 257/E33.058; 257/E33.059; 257/E33.061

(58) **Field of Classification Search** 257/98–100, 257/E33.058–E33.061
See application file for complete search history.

(56) **References Cited**

U.S. PATENT DOCUMENTS

6,498,355	B1 *	12/2002	Harrah et al.	257/99
6,500,891	B1 *	12/2002	Kropp et al.	524/430
6,541,800	B2 *	4/2003	Barnett et al.	257/98
6,874,910	B2 *	4/2005	Sugimoto et al.	362/294
6,936,855	B1	8/2005	Harrah	
7,495,322	B2 *	2/2009	Hashimoto et al.	257/676
2001/0030866	A1 *	10/2001	Hochstein	362/294
2003/0007330	A1 *	1/2003	Kondo	361/748
2003/0189830	A1 *	10/2003	Sugimoto et al.	362/294
2004/0079957	A1 *	4/2004	Andrews et al.	257/100
2004/0164311	A1	8/2004	Uemura	

(Continued)

FOREIGN PATENT DOCUMENTS

CN 1341966 3/2002

(Continued)

Primary Examiner — Allan R Wilson
(74) *Attorney, Agent, or Firm* — Greenblum & Bernstein, P.L.C.

(57) **ABSTRACT**

A light-emitting device held on a fixture body includes an LED chip, a heat transfer plate made of a thermally conductive material on which the LED chip is mounted, a wiring board having, on one side, patterned conductors, for supplying an electric power to the LED chip and formed with an aperture (exposure part) through which a LED chip mount surface of the heat transfer plate is exposed, an encapsulation part in which the LED chip is encapsulated on the one side of the wiring board, and a dome-shaped color-changing member made of a fluorescent material and an optically transparent material and placed on the one side of the wiring board. The light-emitting device is bonded to the fixture body with an insulating layer interposed therebetween, and the insulating layer has electrical insulating properties and is interposed between the heat transfer plate and the fixture body to thermally couple the same.

6 Claims, 14 Drawing Sheets

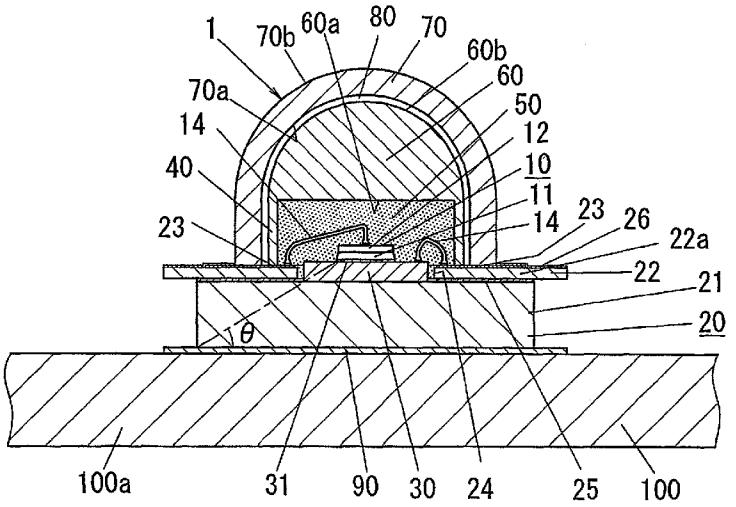

U.S. PATENT DOCUMENTS

2005/0161771	A1	7/2005	Suehiro et al.	
2006/0054915	A1*	3/2006	Chang	257/100
2007/0007540	A1	1/2007	Hashimoto et al.	
2007/0085103	A1	4/2007	Nishioka et al.	
2008/0030143	A1	2/2008	Goriki et al.	
2009/0295265	A1*	12/2009	Tabuchi et al.	313/112

FOREIGN PATENT DOCUMENTS

CN	2634572	8/2004
EP	1418628	5/2004
EP	1603170	12/2005
JP	54-81454	6/1979
JP	7-79058	3/1995
JP	10-282916	10/1998
JP	2001-203396	7/2001
JP	2003-59332	2/2003
JP	2003-110146	4/2003
JP	2003-133596	5/2003
JP	2003-168829	6/2003
JP	2004-253651	9/2004
JP	2005-72382	3/2005
JP	2005-109282	4/2005
JP	2005-136224	5/2005
JP	2005-159045	6/2005
JP	3114129	8/2005
WO	2004/077580	9/2004
WO	2004/082036	9/2004

* cited by examiner

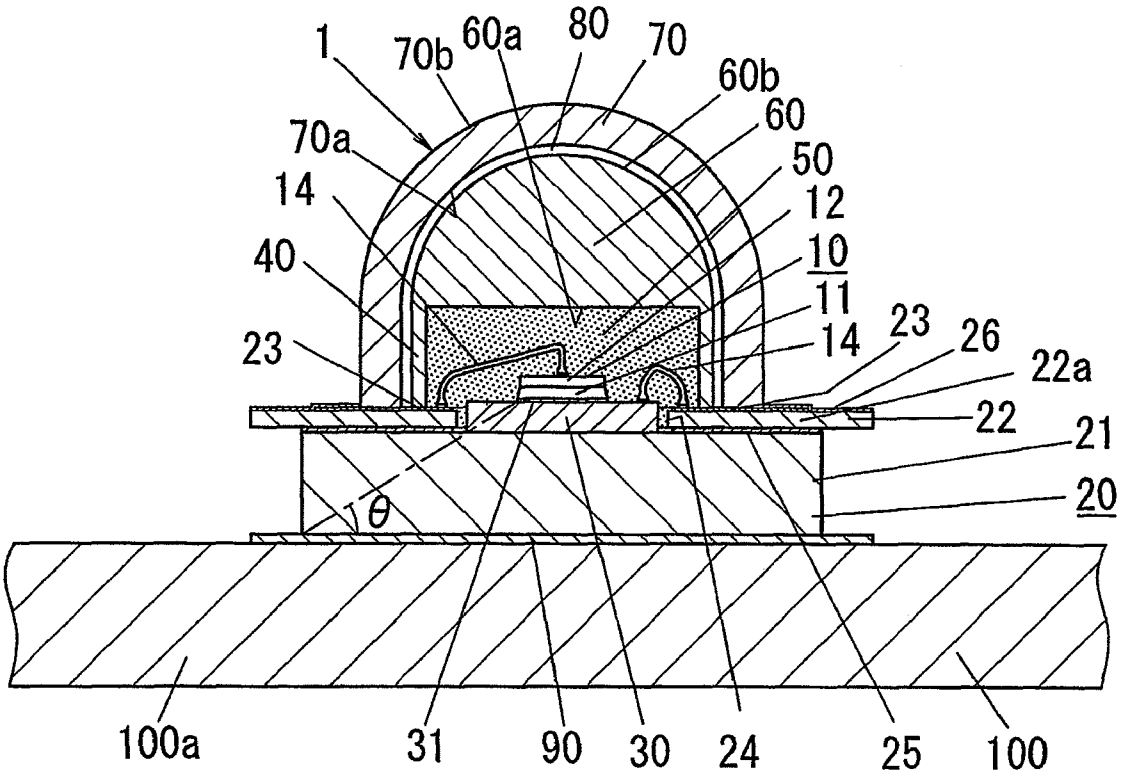
1
70b
60a
80
70
60b
60
70a
50
14
12
40
10
11
23
14
23
26
22a
22
21
20
θ
100a
31
90
30
24
25
100

FIG. 1

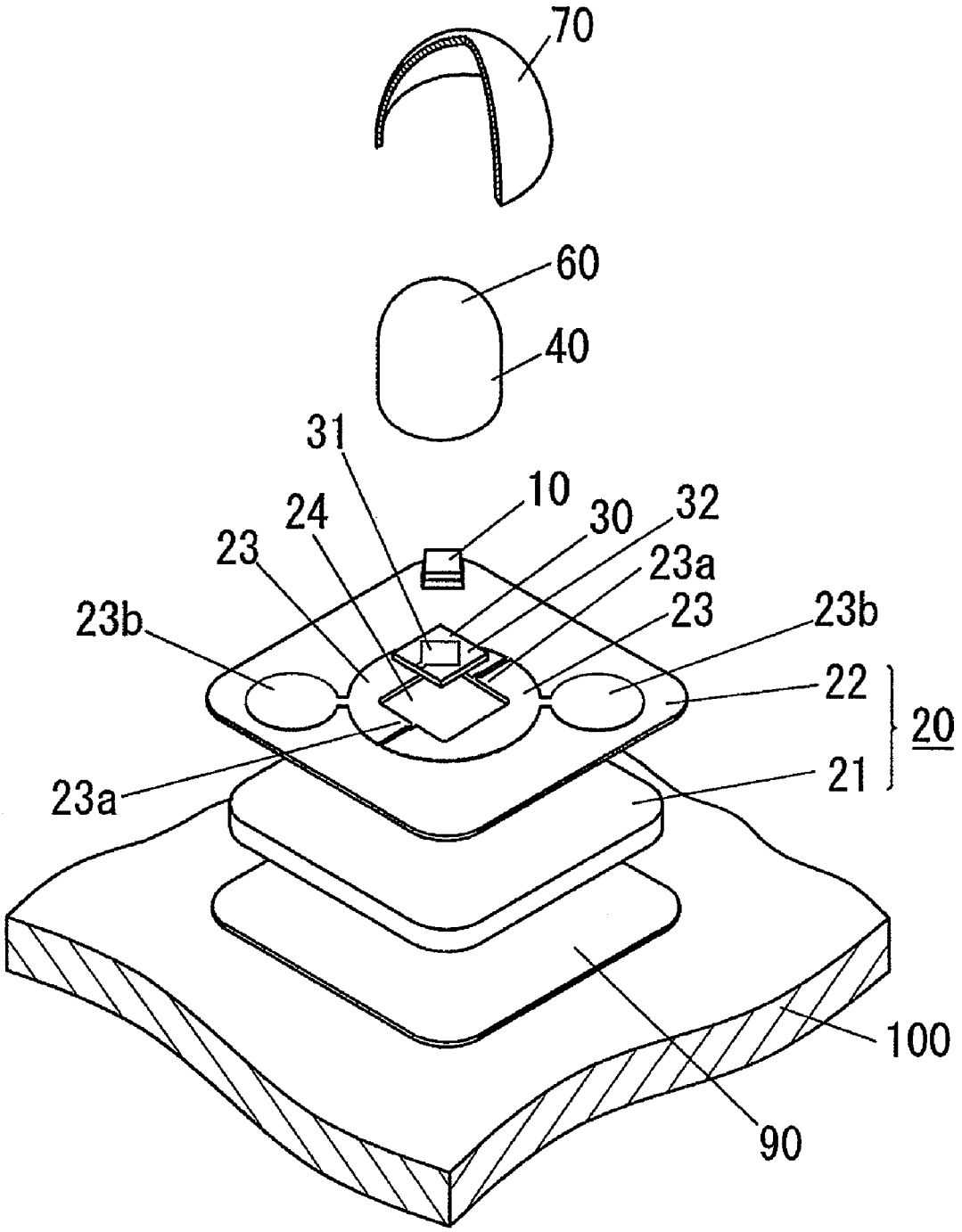

FIG. 2

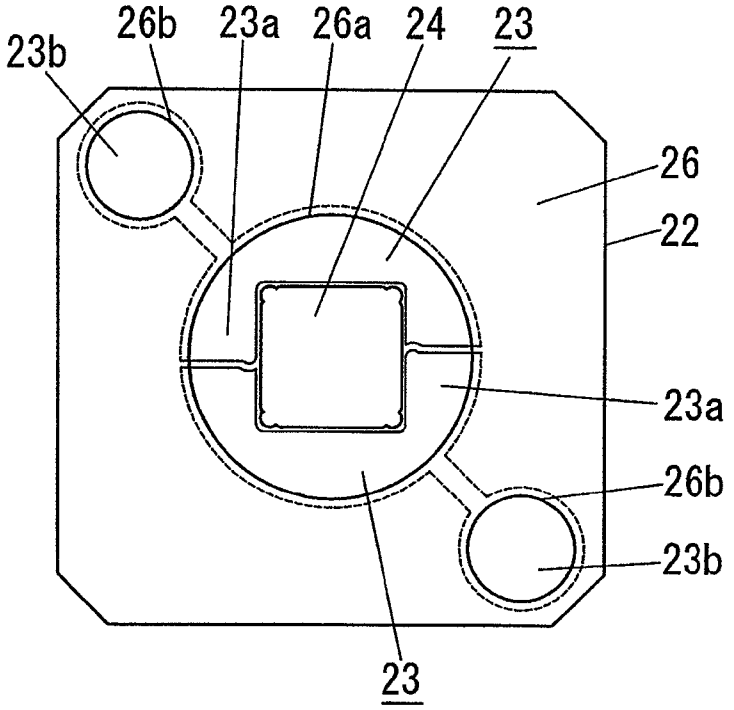
23b
26b
23a
26a
24
23
26
22
23a
26b
23b
23

FIG. 3

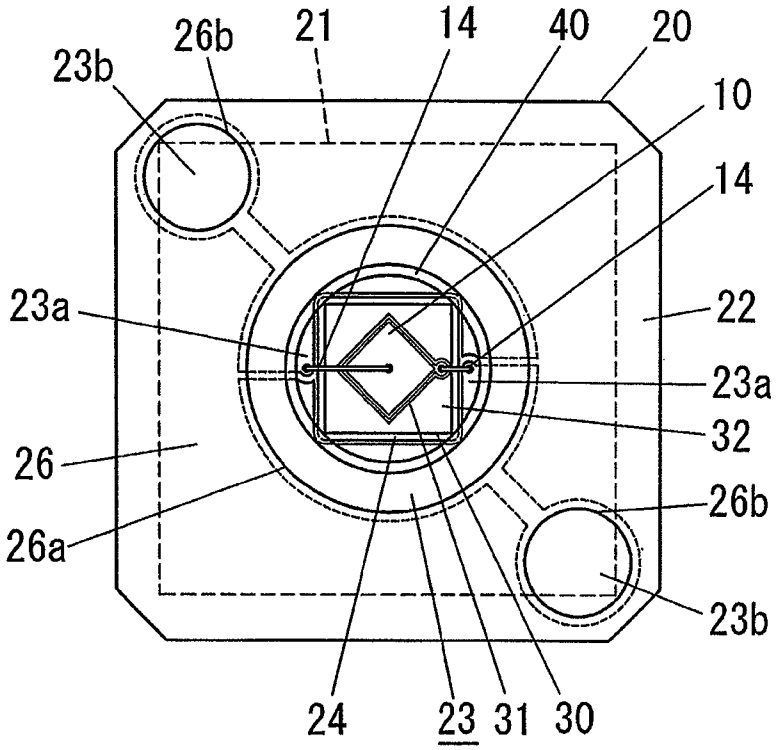
23b
26b
21
14
40
20
10
14
23a
22
23a
32
26
26b
26a
23b
24
23
31
30

FIG. 4

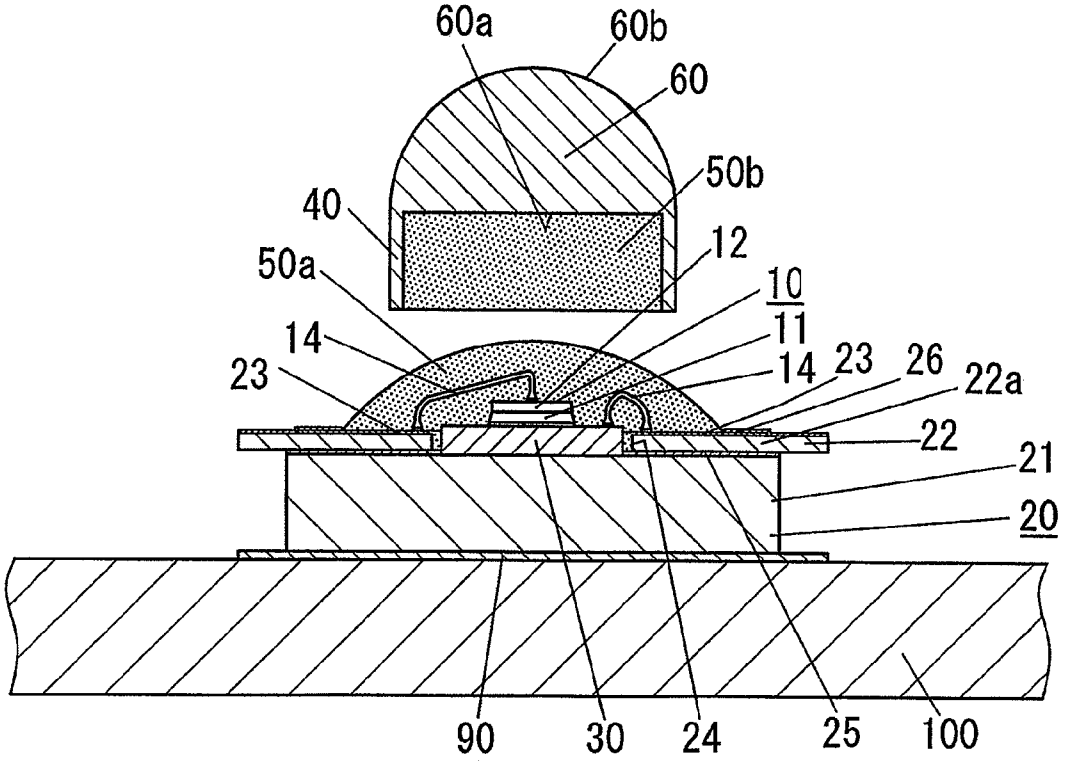
60a
60b
60
50b
40
12
50a
10
11
14
14
23
23
26
22a
22
21
20
90
30
24
25
100

FIG. 5

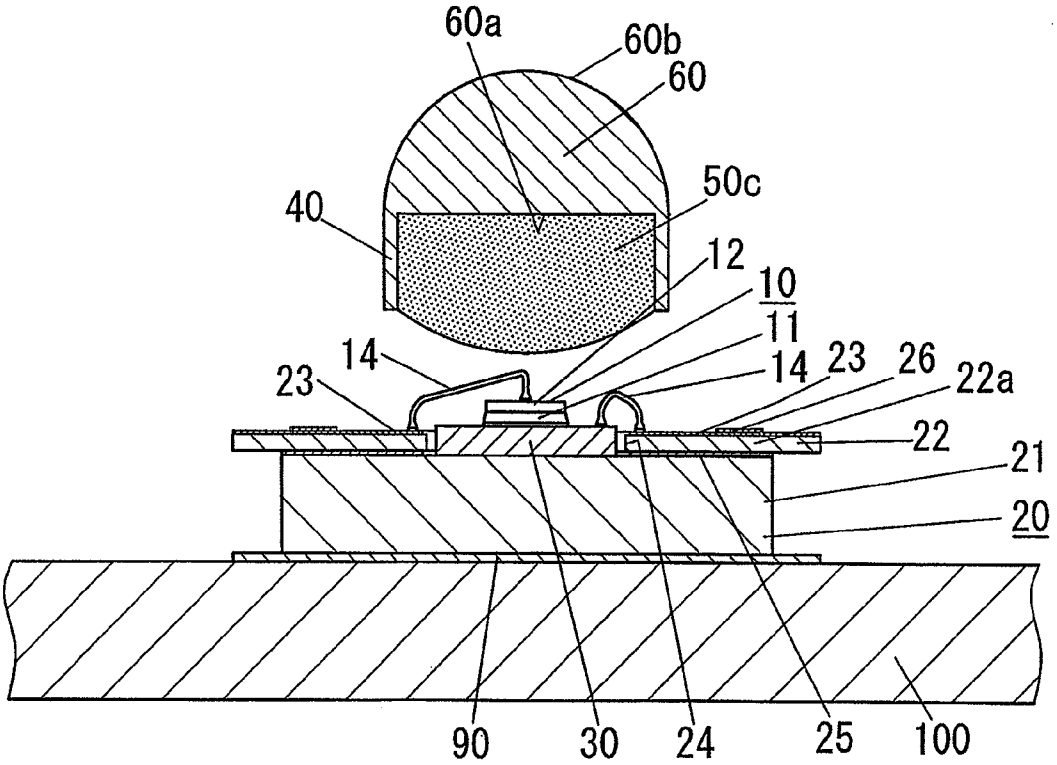
60a
60b
60
50c
40
12
10
11
14
14
23
23
26
22a
22
21
20
90
30
24
25
100

FIG. 6

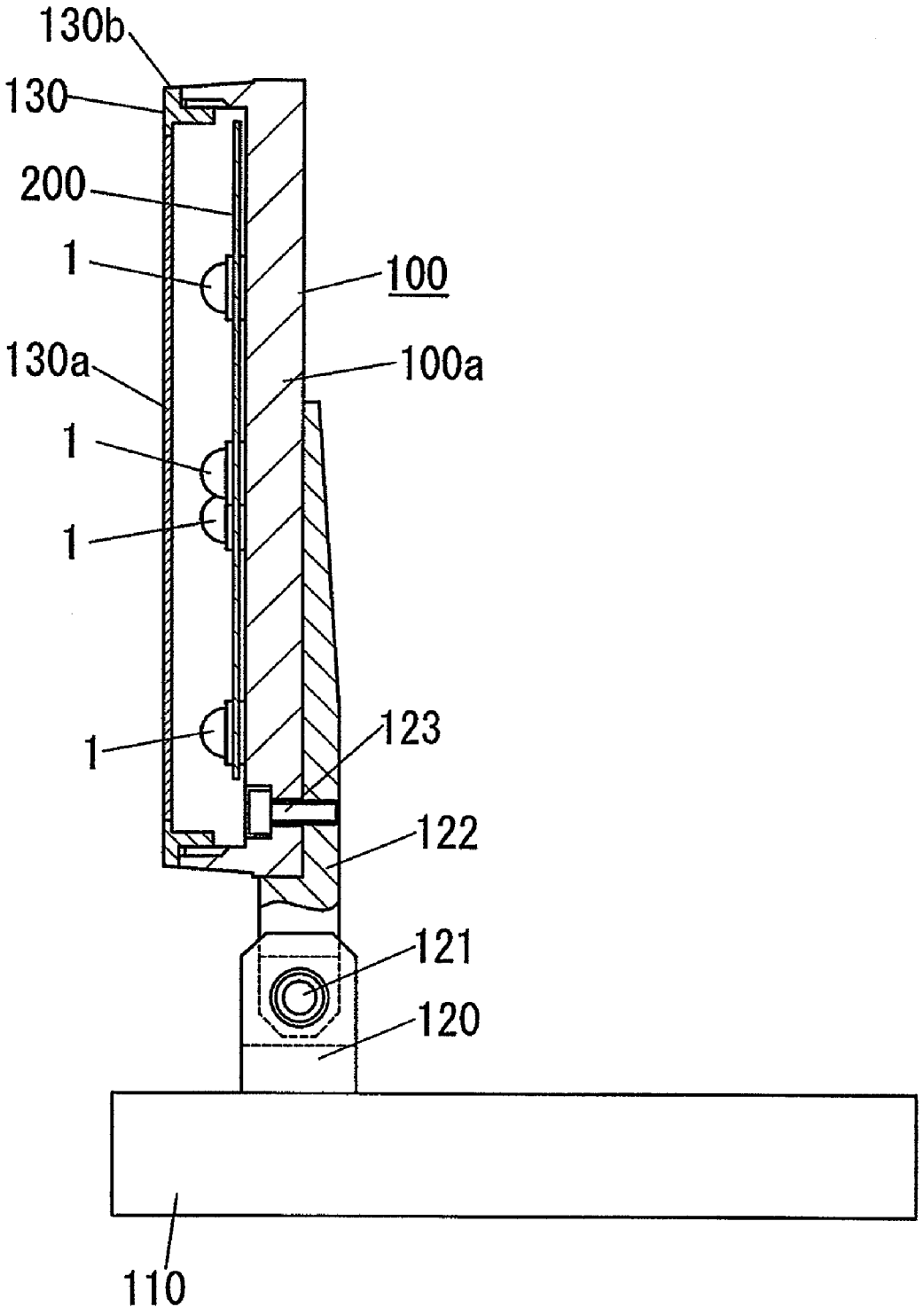

FIG. 7

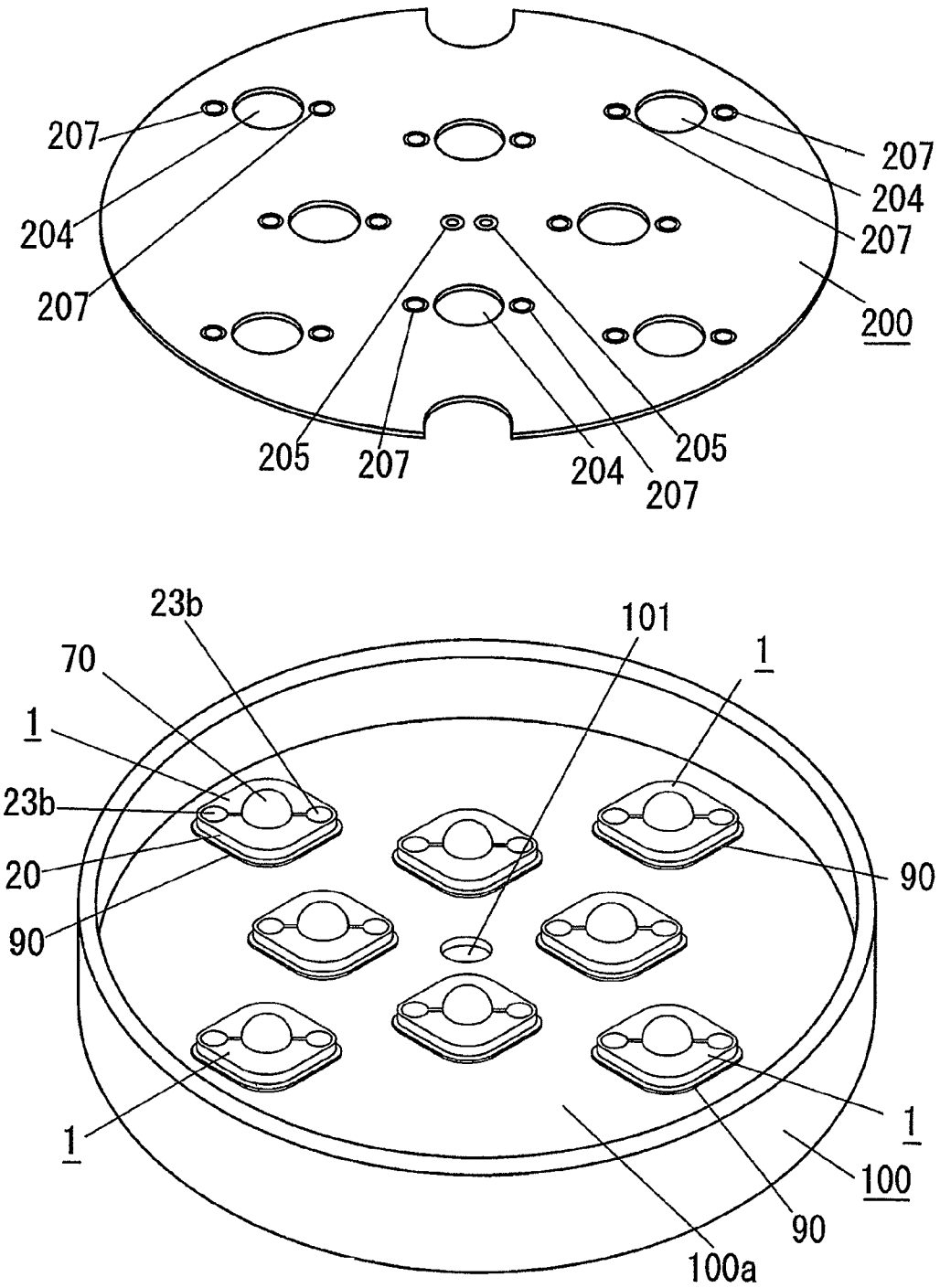
207
204
207
207
204
207
200
205
207
204
207
205
23b
70
1
23b
20
90
101
1
90
1
1
100
90
100a

FIG. 8

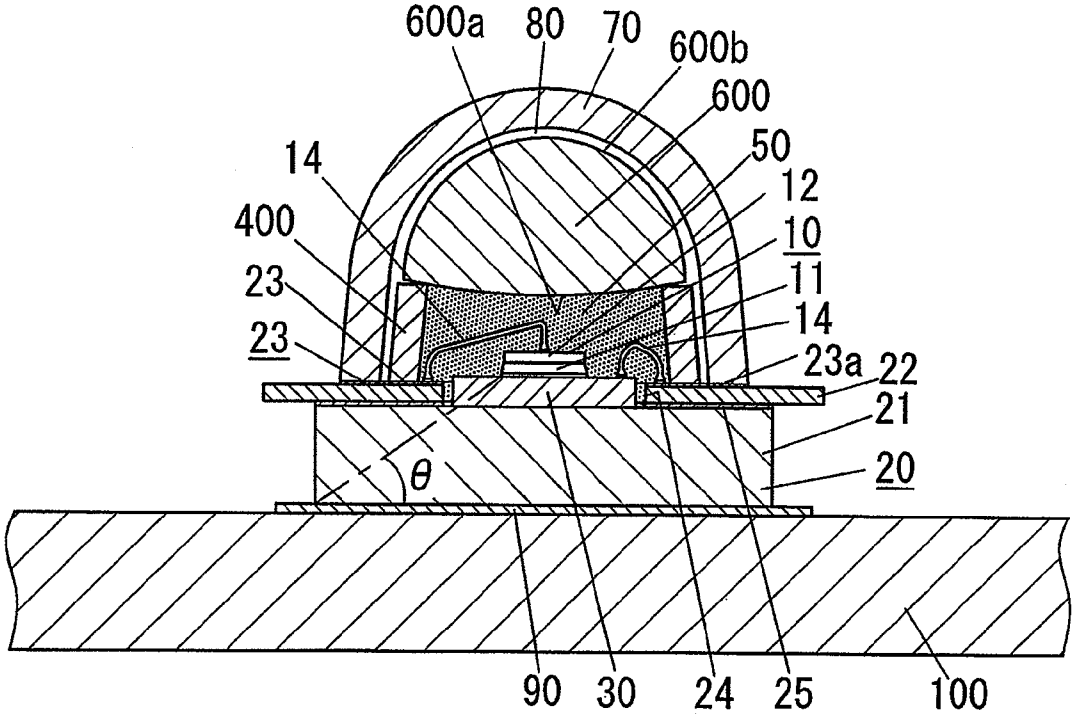
600a
80
70
600b
600
50
14
12
400
10
11
23
14
23
23a
22
21
θ
20
90
30
24
25
100

FIG. 9

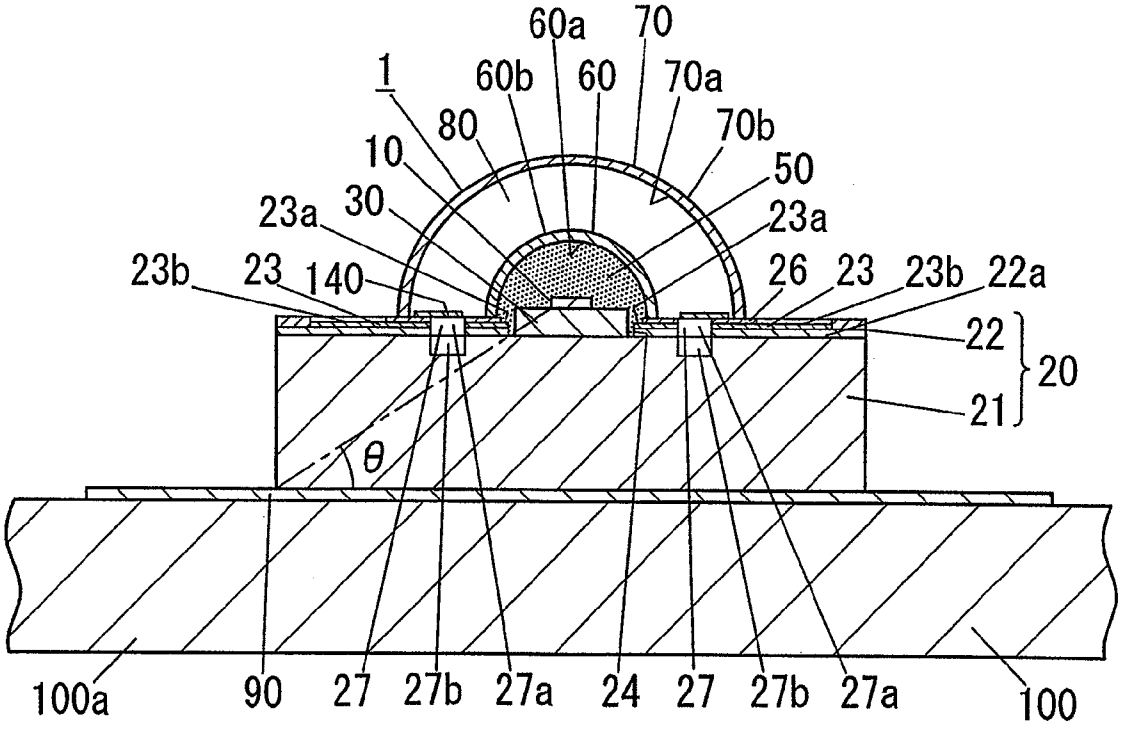
60a
70
1
60b
60
70a
80
70b
10
50
23a
30
23a
23b
23
140
26
23
23b
22a
22
20
21
θ
100a
90
27
27b
27a
24
27
27b
27a
100

FIG. 10

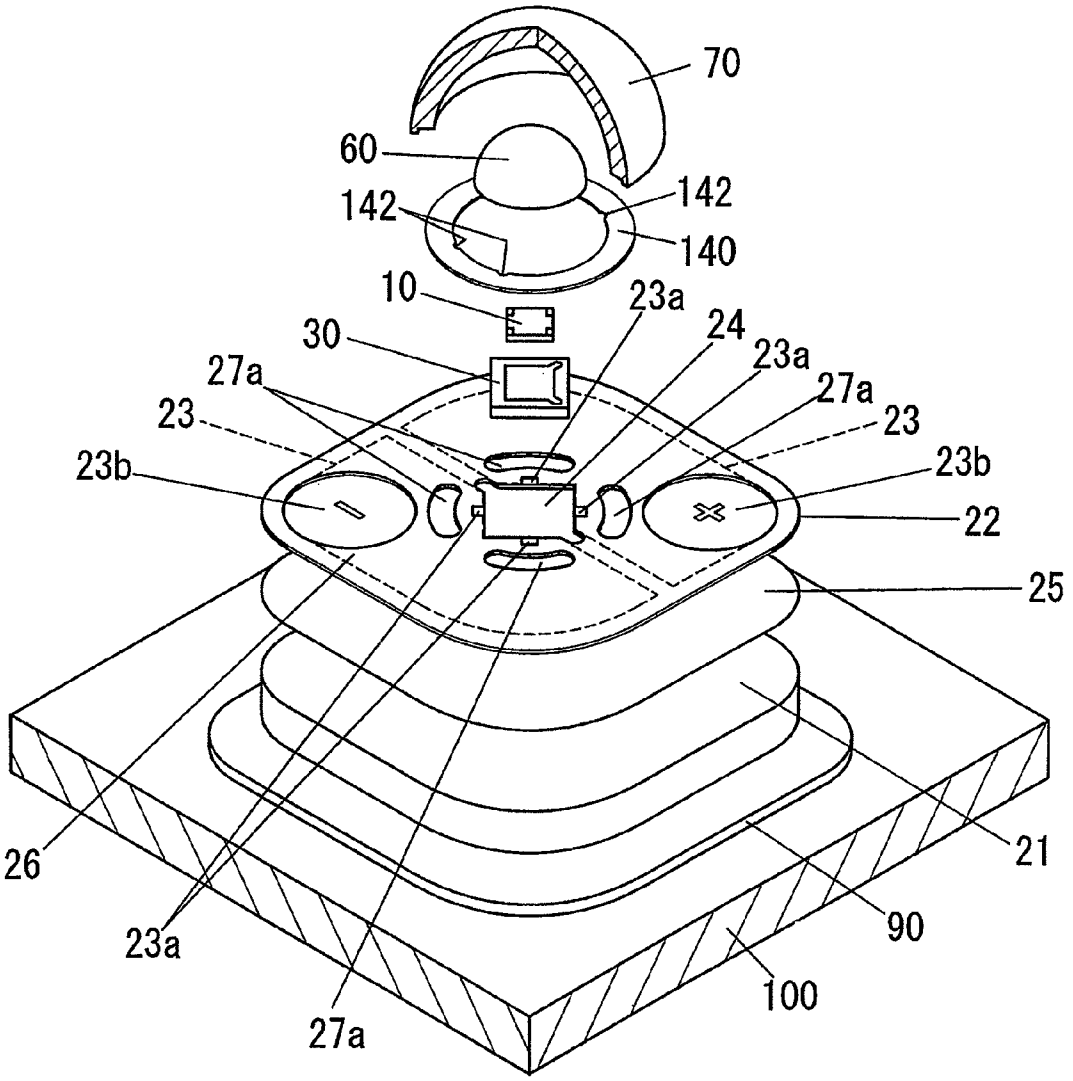
70
60
142
142
140
10
23a
24
30
23a
27a
27a
23
23
23b
23b
22
25
26
21
23a
90
100
27a

FIG. 11

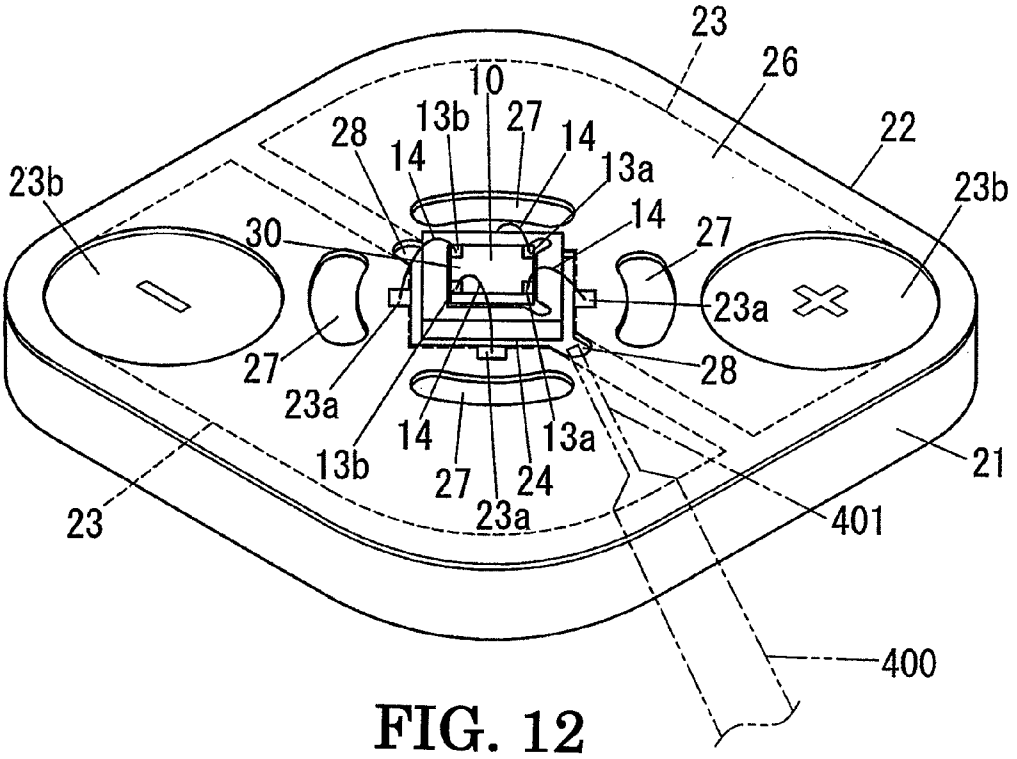

FIG. 12

図 13

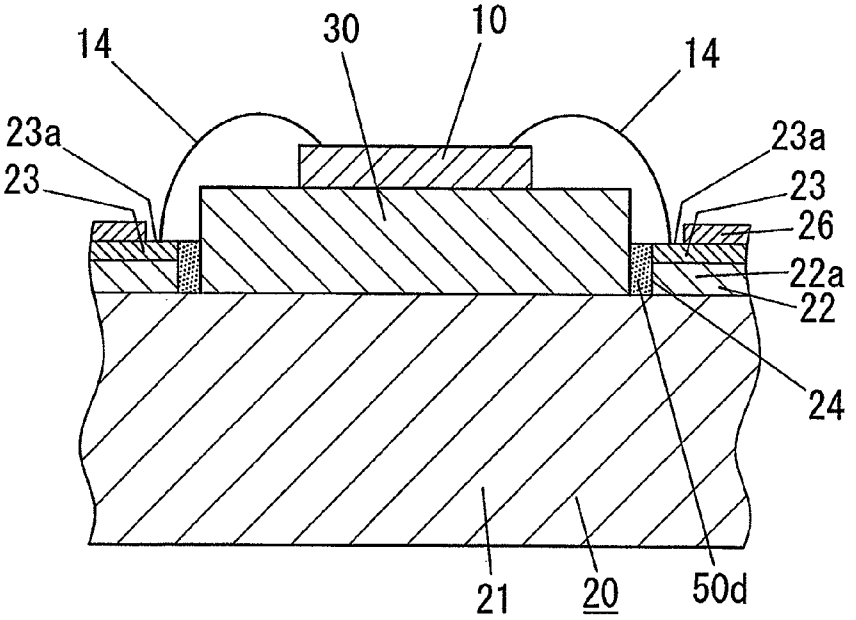

FIG. 13

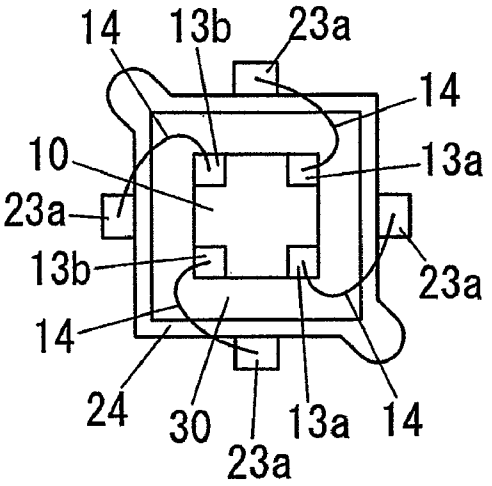

FIG. 14 A

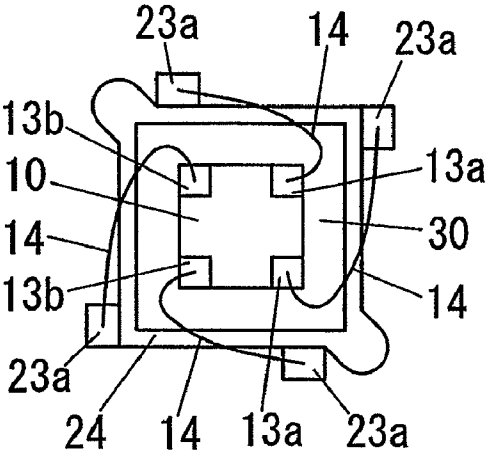

FIG. 14 B

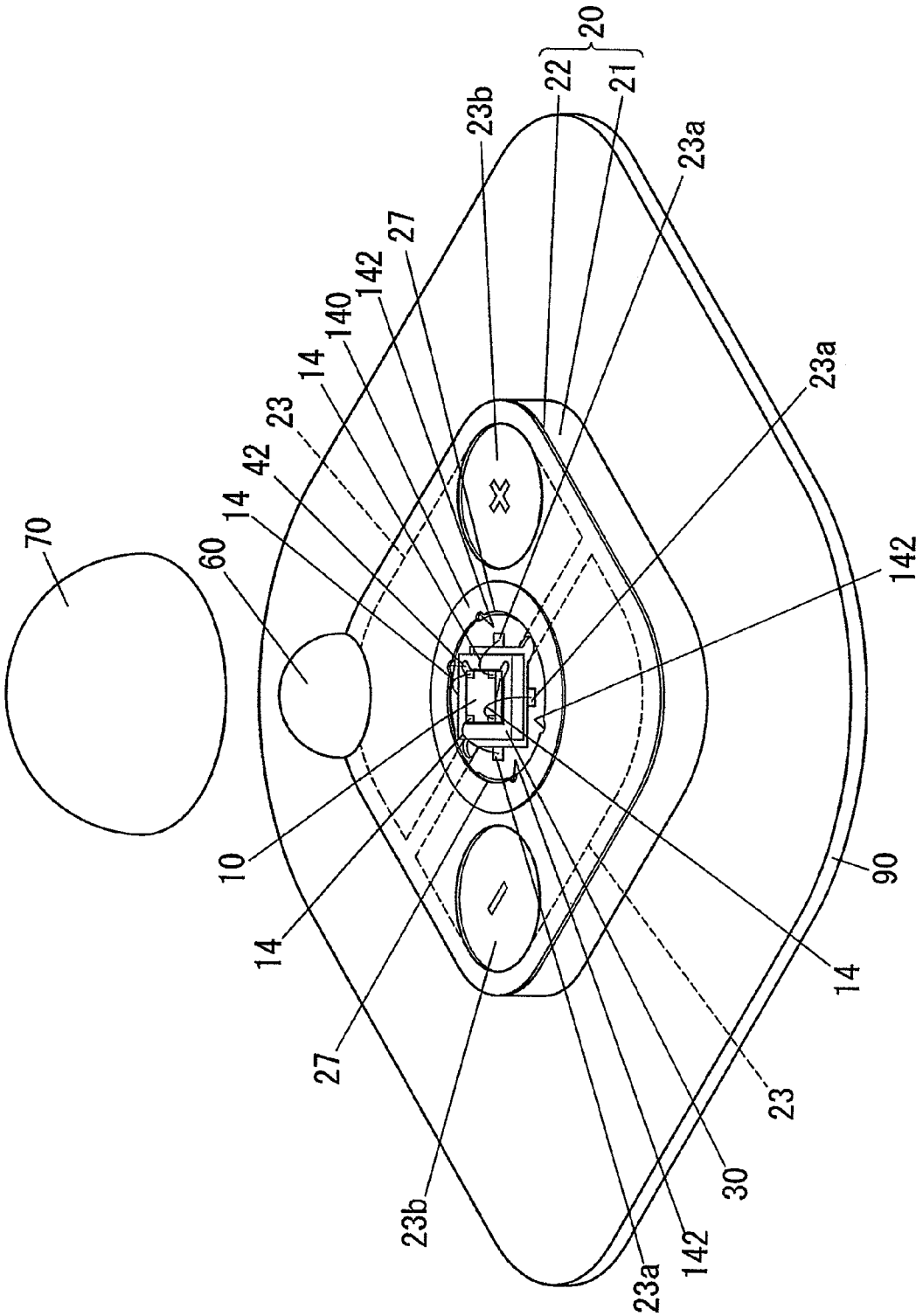
20
22
21
23b
23a
27
142
140
14
23
42
14
70
60
23a
142
10
14
27
23b
23a
142
30
23
14
90

FIG. 15

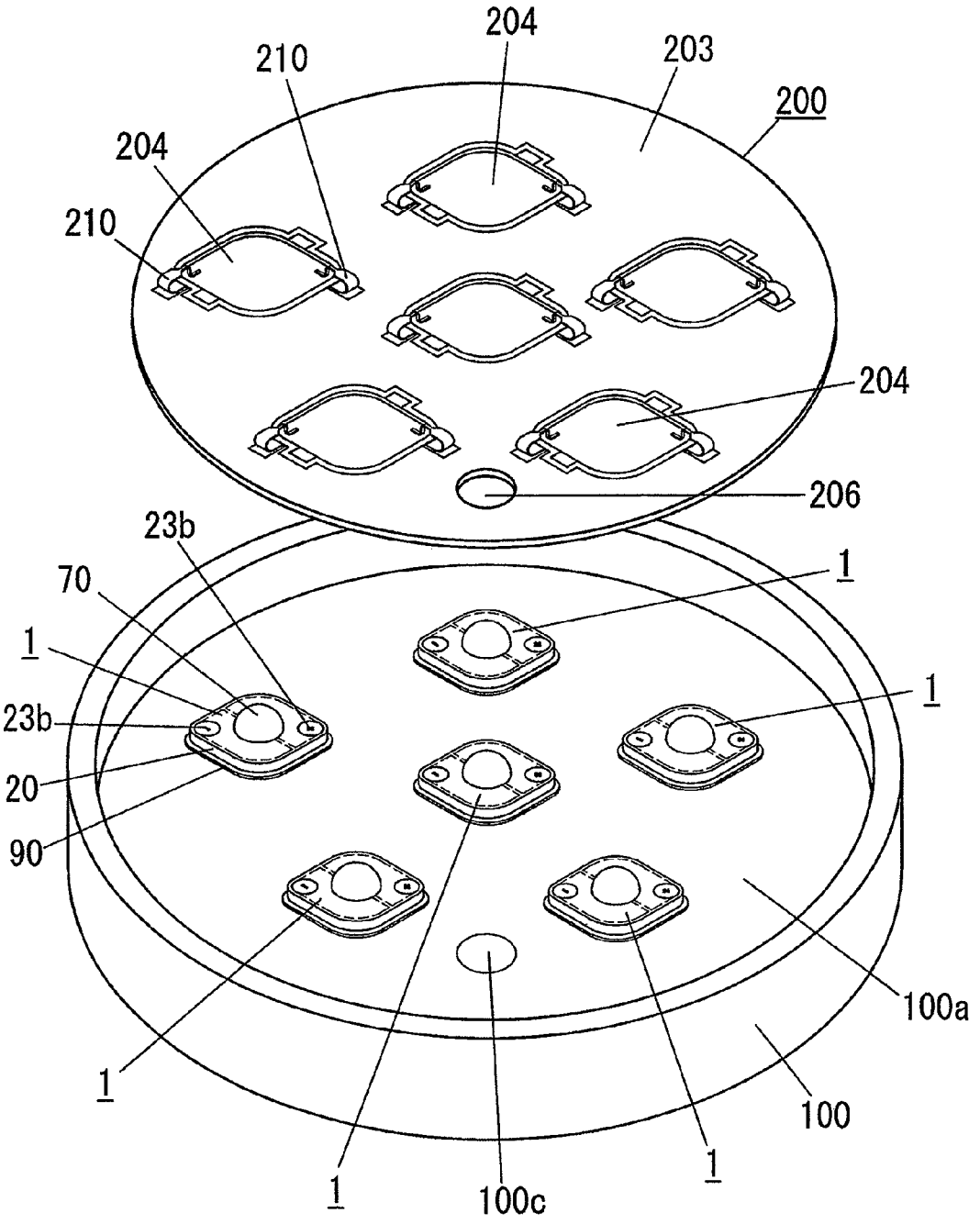
204
210
203
200
204
210
204
206
23b
70
1
1
1
23b
20
90
1
1
1
100a
100
100c

FIG. 16

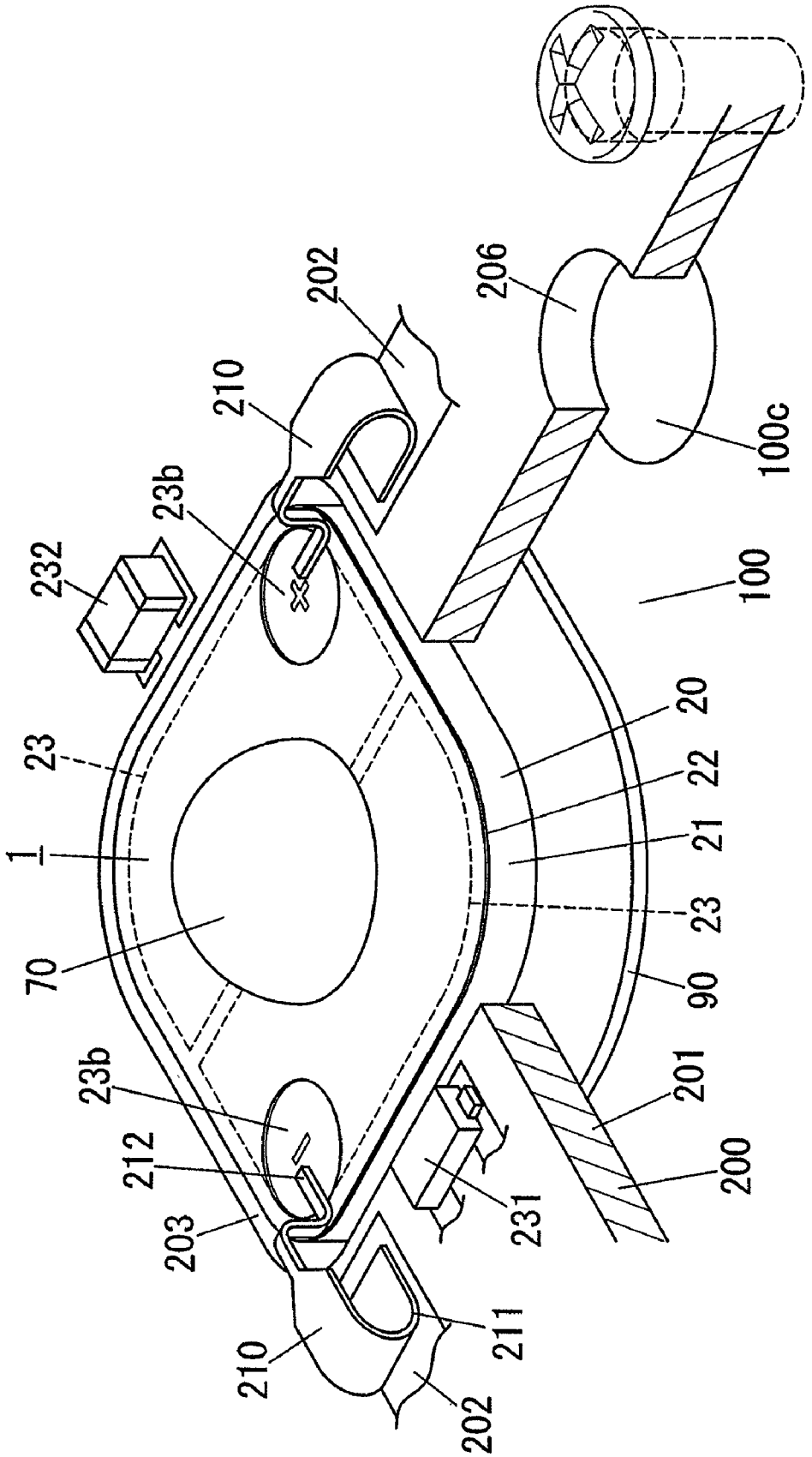
202
206
210
100c
23b
232
100
20
23
22
1
21
23
70
90
23b
201
212
200
231
203
211
210
202

FIG. 17

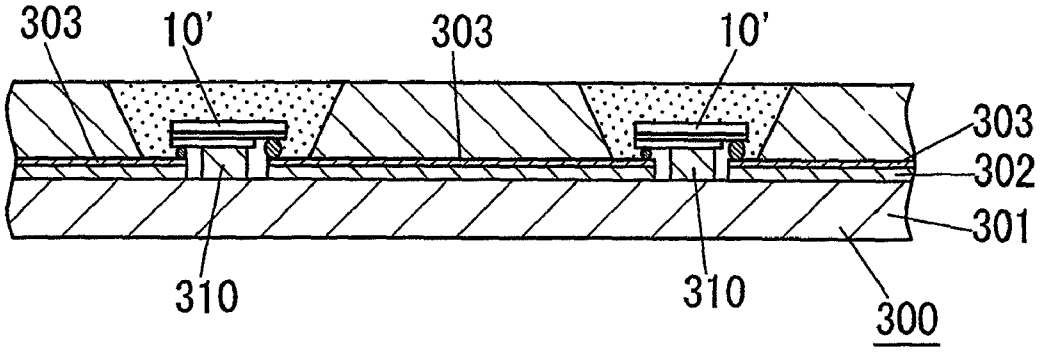
303
10'
303
10'
303
302
301
310
310
300

FIG. 18

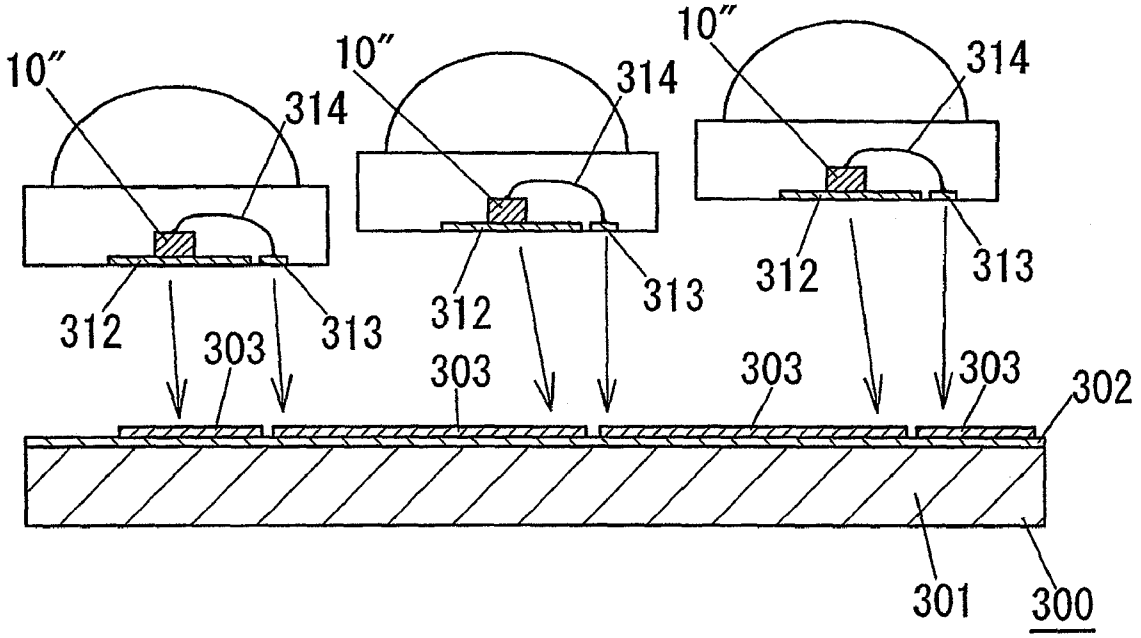
10″
314
312
313
303
10″
314
312
313
303
10″
314
312
313
303
303
302
301
300

FIG. 19

LED LIGHTING FIXTURE

TECHNICAL FIELD

The present invention relates to an LED lighting fixture including an LED chip (light-emitting diode chip)-containing light-emitting device as a light source.

BACKGROUND ART

Research and development have been widely conducted on light-emitting devices that use LED chips in combination with fluorescent materials (such as fluorescent pigments and dyes). In such devices, the fluorescent materials serve as wavelength conversion materials capable of being excited by light emitted from the LED chips and emitting light of a color different from that of the LED chips so that the devices can emit light of a color different from that emitted from the LED chips. Concerning this type of light-emitting devices, there have been commercially manufactured, for example, white light-emitting devices (generally called white LEDs) that use fluorescent materials in combination with blue or violet light-emitting LED chips to produce white light (white light emission spectrum).

As high output power white LEDs have been developed in recent years, research and development on application of white LEDs to lights have been aggressively conducted. For applications such as general lights that require a relatively large light output power, a single white LED is not enough to produce a desired light output power. Therefore, in general, a plurality of white LEDs are mounted on a circuit board to form an LED unit, and the entire LED unit is used to ensure the desired light output power (see, for example, Japanese Unexamined Patent Publication No. 2003-59332 (Patent Literature 1)).

It has also been proposed that an LED unit including a plurality of LED chips and a circuit board on which the respective LED chips are mounted has a structure for efficiently dissipating heat generated at a light-emitting part of each LED chip to outside such that an increase in junction temperature of each LED chip can be suppressed and that a light output power can be increased with an increase in input power (see, for example, Paragraph [0030] and FIG. 6 of Japanese Unexamined Patent Publication No. 2003-168829 (Patent Literature 2), and FIG. 6 of Japanese Unexamined Patent Publication No. 2001-203396 (Patent Literature 3)).

As shown in FIG. **18**, the LED unit disclosed in Patent Literature 2 has a metal circuit board **300** that includes a metal plate **301** on which a patterned circuit **303** formed with patterned conductors is formed with an insulating resin layer **302** interposed therebetween, in which heat generated at each LED chip **10'** can be transferred to the metal plate **301** through a heat transfer member **310**. Each LED chip **10'** is a blue GaN LED chip including a crystal growth substrate made of an insulating sapphire substrate and a light-emitting part made of GaN compound semiconductor materials and formed on one side of the crystal growth substrate. Each LED chip **10'** is flip-chip mounted on the circuit board **300**, and the other side of the crystal growth substrate forms a light output surface.

As shown in FIG. **19**, the LED unit disclosed in Patent Literature 3 has a metal circuit board **300** on which each LED chip **10"** is mounted. Each LED chip **10"** has an anode electrode formed on one side and a cathode electrode formed on the other side. Out of the anode and cathode electrodes, the electrode closer to the circuit board **300** is electrically connected to a first conductor plate **312**, and the electrode distant from the circuit board **300** is electrically connected to a second conductor plate **313** through a thin metal bonding wire **314**. The first and second conductor plates **312** and **313** are respectively bonded to patterned circuits **303** of the circuit board **300**.

In a case where the LED unit configured as shown in FIG. **18** or **19** is used for lighting fixtures, the fixture body may be made of a metal, and the metal plate **301** of the circuit board **300** in the LED unit may be thermally coupled to the fixture body so that heat from the LED unit can be efficiently dissipated. In order to ensure lighting surge resistance, at present, a heat radiating rubber sheet such as Sarcon (Registered Trademark) is interposed as a sheet-shaped insulating material (insulating layer) between the fixture body and the metal plate **301** of the circuit board **300**. In such a conventional technique, a portion from the light-emitting part of each LED chip **10'** or **10"** to the fixture body has a high level of thermal resistance, and therefore the power input to each LED chip **10'** or **10"** has to be limited such that the junction temperature of each LED chip **10'** or **10"** does not exceed the maximum junction temperature, which makes it difficult to increase the light output power.

When the heat radiating sheet is interposed between the metal plate **301** of the circuit board **300** and the fixture body, the heat radiating sheet may be insufficiently bonded to the metal plate **301** so that a void may be formed between the metal plate **301** and the heat radiating sheet to increase the thermal resistance or to cause variations in thermal resistance of the portion from the light-emitting part of each LED chip **10'** or **10"** to the fixture body.

In the LED unit disclosed in Patent Literature 2, the heat generated at the light-emitting part of the LED chip **10'** is transferred to the metal plate **301** through the heat transfer member **310** that is smaller in size than the LED chip **10'**. Therefore, the portion from the LED chip **10'** to the metal plate **301** has a relatively high level of thermal resistance. When the sapphire substrate serving as a crystal growth substrate is mounted so as to be thermally coupled to the metal plate **301**, there is also a problem in which the sapphire substrate provides high thermal resistance.

The present invention has been made in light of the circumstances described above, and it is an object of the present invention to provide an LED lighting fixture in which an increase in temperature of an LED chip can be suppressed so that a light output power can be increased.

DISCLOSURE OF THE INVENTION

An LED lighting fixture according to the present invention is characterized by including: a light-emitting device that includes an LED chip, a heat transfer plate made of a thermally conductive material and having one side on which the LED chip is mounted, a wiring board having on one side a patterned conductor for supplying an electric power to the LED chip, being bonded to an LED chip mount-side of the heat transfer plate, and being formed with an exposure part through which the LED chip mount-side on the heat transfer plate is exposed, an encapsulation part in which the LED chip is encapsulated on the one side of the wiring board, and a dome-shaped color-changing member formed with an optically transparent material and a fluorescent material excited by light emitted from the LED chip and emitting light of a color different from a color of the light emitted from the LED chip, and placed to surround the encapsulation part on the one side of the wiring board; a metal fixture body on which the LED chip-containing light-emitting device is held; and an insulating layer having electrical insulating properties and being interposed between the heat transfer plate and the fix-

ture body to thermally couple the same, wherein the light-emitting device is bonded to the fixture body with the insulating layer interposed therebetween.

These features can reduce thermal resistance of a portion from the light-emitting part of the LED chip to the fixture body, increase thermal radiation performance, suppress an increase in junction temperature of the LED chip, so that a light output power can be increased with an increase in input electric power, as compared with a conventional case where a heat radiating sheet is interposed between the fixture body and the circuit board on which the LED chip is mounted. When used with the light output power same as that of the conventional case, the LED lighting fixture of the present invention has an advantage that the junction temperature of the LED chip can be lowered so that the LED chip can have a longer life, as compared with the conventional LED lighting fixture.

Preferably, in the light-emitting device, the LED chip is mounted on the heat transfer plate with a sub-mount member that is interposed therebetween to relax a stress applied to the LED chip due to a difference in coefficient of linear expansion between the LED chip and the heat transfer plate.

In this case, it is possible to prevent breakage of the LED chip caused by the difference in coefficient of linear expansion between the LED chip and the heat transfer plate to increase reliability.

Preferably, the sub-mount member has an area larger than that of the LED chip, and is dimensionally set such that a rim of the sub-mount member is placed outside a truncated cone having an upper base formed by a circle inscribed in a sub-mount member-facing surface of the LED chip and a lower base formed by a circle circumscribed about another surface of the heat transfer plate.

In this case, the area of the sub-mount member is larger than that of the LED chip so that lower thermal resistance can be provided between the LED chip and the mount board. As the sub-mount member is dimensionally set such that the rim of the sub-mount member is placed outside the truncated cone having the upper base formed by the circle inscribed in the sub-mount member-facing surface of the LED chip and the lower base formed by the circle circumscribed about the other surface of the heat transfer plate, heat generated at the LED chip is allowed to linearly flow along a path from the LED chip to an end of the other surface of the heat transfer plate through the sub-mount member, so that the heat from the LED chip can be efficiently transferred to the entire other side of the heat transfer plate. Namely, the heat generated at the LED chip can be transferred to a wider area and dissipated through the entire other surface of the heat transfer plate, so that the heat radiation efficiency can be increased and that an increase in junction temperature of the LED chip can be suppressed. Therefore, the output power and the life can be further increased.

More preferably, the truncated cone is set to have a generatrix that makes an angle of 45Ω with the lower base.

In this case, efficiency of heat transfer from the LED chip to the other surface of the heat transfer plate can become higher than that in a case where other angles are selected.

The insulating layer is preferably formed with a resin sheet that contains a filler and is reduced in viscosity when heated.

In this case, it is possible to prevent an increase in thermal resistance, which would otherwise be caused by formation of a void between the heat transfer plate and the insulating layer due to insufficient adhesion between the heat transfer plate and the insulating layer or due to secular change of the insulating layer.

The insulating layer is preferably set to have a two-dimensional size larger than that of the heat transfer plate.

In this case, a creeping distance between the heat transfer plate and the fixture body can be increased and lighting surge resistance can be enhanced, as compared with a case where the insulating layer and the heat transfer plate are formed in the same two-dimensional size.

The color-changing member is preferably placed such that an air layer is formed inside the color-changing member.

In this case, the air layer can function as a thermal insulation layer to suppress transfer of heat from the color-changing member to the LED chip and to inhibit an increase in temperature of the LED chip.

BRIEF DESCRIPTION OF THE DRAWINGS

FIG. **1** is a schematic cross-sectional view of a light-emitting device in an LED lighting fixture according to Embodiment 1 of the present invention.

FIG. **2** is a partially exploded schematic perspective view showing the main part of the light-emitting device in the LED lighting fixture of FIG. **1**.

FIG. **3** is a schematic plan view showing the main part of the light-emitting device in the LED lighting fixture of FIG. **1**.

FIG. **4** is a schematic plan view showing the main part of the light-emitting device in the LED lighting fixture of FIG. **1**.

FIG. **5** is an illustrative diagram showing a method for manufacturing the light-emitting device in the LED lighting fixture of FIG. **1**.

FIG. **6** is an illustrative diagram showing another method for manufacturing the light-emitting device in the LED lighting fixture of FIG. **1**.

FIG. **7** is a partially exploded schematic side view of the LED lighting fixture of FIG. **1**.

FIG. **8** is an exploded schematic perspective view showing the main part of the LED lighting fixture of FIG. **1**.

FIG. **9** is a schematic cross-sectional view showing another mode of light-emitting device in the LED lighting fixture of FIG. **1**.

FIG. **10** is a schematic cross-sectional view of a light-emitting device in an LED lighting fixture according to Embodiment 2 of the present invention.

FIG. **11** is a partially exploded schematic perspective view showing the main part of the light-emitting device in the LED lighting fixture of FIG. **10**.

FIG. **12** is an illustrative diagram showing a method for manufacturing the light-emitting device in the LED lighting fixture of FIG. **10**.

FIG. **13** is an illustrative diagram showing another method for manufacturing the light-emitting device in the LED lighting fixture of FIG. **10**.

FIG. **14**A is an illustrative diagram showing the main part of the light-emitting device in the LED lighting fixture of FIG. **10**.

FIG. **14**B is an illustrative diagram showing the main part of another light-emitting device in the LED lighting fixture of FIG. **10**.

FIG. **15** is an exploded schematic perspective view of the light-emitting device in the LED lighting fixture of FIG. **10**.

FIG. **16** is an exploded schematic perspective view of the main part of the LED lighting fixture of FIG. **10**.

FIG. **17** is a partially exploded schematic perspective view of the main part of the LED lighting fixture of FIG. **10**.

FIG. **18** is a schematic cross-sectional view of a conventional LED unit.

FIG. **19** is a schematic diagram of another conventional LED unit.

BEST MODE FOR CARRYING OUT THE INVENTION

Embodiment 1

An LED lighting fixture according to the present embodiment is described in detail below with reference to FIGS. **1** to **9** attached hereto.

The LED lighting fixture of the present embodiment is typically for use as a spotlight and includes, as shown in FIG. **7**, a mount **110**, a rotary base **120** fixed on the mount **110**, an arm **122** with its one end coupled to the rotary base **120** with a screw shaft **121**, and a fixture body **100** of a metal (for example, a highly thermal conductive metal such as Al and Cu) coupled to the arm **122** with a coupling screw **123**.

The fixture body **100** is in the form of a bottomed shallow cylinder having an opening on one end. A plurality of light-emitting devices **1** (eight devices in the present embodiment) and a circular plate-shaped circuit board **200** (see FIG. **8**) are housed in the fixture body **100**, and the one end is sealed with a front cover **130**. Each light-emitting device **1** includes an LED chip **10** and a mount board **20** having patterned conductors **23**, **23** for power supply to the LED chip **10**. The LED chip **10** is mounted on the mount board **20**. The circuit board **200** has a patterned circuit wiring (not shown) defining the relation of the connection between the respective light-emitting devices **1** and also has apertures **204** through which the respective light-emitting devices **1** are partially inserted at sites corresponding to the respective light-emitting devices **1**. The insulating base material for the circuit board is typically, but not limited to, a glass-epoxy resin such as FR4 or alternatively a polyimide resin, a phenol resin or the like.

In the LED lighting fixture of the present embodiment, each light-emitting device **1** is mounted on the bottom wall **100***a* of the fixture body **100** so that each light-emitting device **1** is held on the fixture body **100**. The circuit board **200** having the apertures **204** at cites corresponding to the respective light-emitting devices **1** is placed apart from the bottom wall **100***a* of the fixture body **100** such that the peripheral portion of each aperture **204** overlaps the peripheral portion of the mount board **20** of each light-emitting device **1**. The size of the aperture **204** is set larger than the outer diameter of a color-changing member **70** as described later.

The pattern of the patterned wiring of the circuit board **200** is designed to establish the relation of series connection of the plurality of light-emitting devices **1**. The patterned wiring is electrically connected to a pair of power supply wires (not shown) provided through a wire insertion hole **101** (see FIG. **8**) formed through the central portion of the bottom wall **100***a* of the fixture body **100**. Specifically, each of the wires is inserted through the inside of each of a pair of through-hole wirings **205**, **205** formed at the central portion of the circuit board **200** and then connected to each of the through-hole wirings **205**, **205** with a solder. In the circuit board **200**, plated through-holes **207** are also formed at the peripheral portion of each aperture **204** to electrically connect the patterned circuit to the patterned conductor **23** of the light-emitting device **1**. In this structure, each of the through-hole wirings **205**, **205** for connecting each wire and each of the plated through-hole **207** for connecting the light-emitting device are formed so as to cover the inside wall of the through hole (extending in the direction of the thickness of the circuit board **200**) and to cover portions around the through hole on both sides of the circuit board **200** and connected to the patterned circuit. In the circuit board **200**, the patterned circuit is formed on one side that faces the bottom wall **100***a* of the fixture body **100**, while a light reflecting layer including a metal layer or a white-colored resist layer (not shown) is formed on the other side.

The circuit board **200** is also configured to define the relation of the connection of the respective light-emitting devices **1** and to supply power thereto from a power supply circuit (not shown) through the pair of wires. For example, the power supply circuit to be used may include a diode bridge-containing rectifier circuit for rectifying and smoothing an AC output from an AC power source such as a commercial power source, and a smoothing capacitor for smoothing the output from the rectifier circuit. In the present embodiment, the plurality of light-emitting devices **1** are connected in series. However, the relation of the connection of the light-emitting devices **1** is not limited thereto, and they may be connected in parallel or in a combination of series and parallel.

The front cover **130** includes an optically transparent plate **130***a* made of a circular glass plate and a circular window frame **130***b* that holds the optically transparent plate **130***a*. The window frame **130***b* is attached to the fixture body **100**. The optically transparent plate **130***a* is not limited to a glass plate and may be made of any optically transparent material. A lens or lenses for controlling the distribution of light from the respective light-emitting devices **1** may be integrally formed with the optically transparent plate **130***a*.

As shown in FIG. **1**, the light-emitting device **1** includes: an LED chip **10**; a mount board **20** on which the LED ship **10** is mounted; a frame **40** provided to surround the LED chip **10** on the mount surface side of the mount board **20**; bonding wires **14**, **14** electrically connected to the LED chip **10**; an optically transparent and elastic encapsulation part **50** including an encapsulant resin and encapsulating the LED chip **10** and the bonding wires **14**, **14** inside the frame **40**; an optical component **60** including a lens that is integrally formed with the frame **40** to control the distribution of light emitted from the LED chip **10** and transmitted through the encapsulation part **50**; and a dome-shaped color-changing member **70** that includes an optically transparent material and a fluorescent material capable of being excited by light from the LED chip **10** and capable of emitting light of a color different from the color of the emission from the LED chip **10** and is placed so as to surround the encapsulation part **50** with the mount board **20**. In this structure, the color-changing member **70** is placed on the LED chip **10** mount surface side of the mount board **20** such that an air layer **80** is formed between the light output surface **60***b* of the optical component **60** and the outer surface of the frame **40** (in other words, in the present embodiment, the encapsulation part **50** is surrounded by the frame **40** and the optical component **60**, and the color-changing member **70** is placed so as to surround the optical component **60** and the frame **40**).

The mount board **20** includes: a rectangular heat transfer plate **21** made of a thermally conductive material on which the LED chip **10** is mounted; and a rectangular wiring board **22** bonded to one side (the upper side in FIG. **1**) of the heat transfer plate **21**. The center portion of the wiring board **22** has a rectangular aperture **24** through which the mount surface (part of the one side) of the heat transfer plate **21** for receiving the LED chip **10** is exposed. The LED chip **10** is mounted on the heat transfer plate **21** with a sub-mount member **30** that is interposed therebetween and placed inside the aperture **24**. The heat generated at the LED chip **10** is transferred to the sub-mount member **30** and the heat transfer plate **21** not through the wiring board **22**. In the present embodiment, Cu, a high thermal-conductivity metal, is used as the thermally conductive material for the heat transfer plate **21**

(namely, a metal plate is used as the heat transfer plate **21**). However, the thermally conductive material is not limited to Cu and may be any other metal such as Al or any nonmetallic material having high thermal conductivity similarly to these metals. In the present embodiment, the aperture **24** of the wiring board **22** forms an exposure part through which the mount surface of the heat transfer plate **21** for receiving the LED chip **10** is exposed.

The wiring board **22** includes: an insulating substrate **22***a* made of a glass-epoxy resin base material; and a pair of patterned power-supply conductors (patterned leads) **23**, **23** electrically connected to the respective electrodes (not shown) of the LED chip **10**. The patterned conductors **23**, **23** each include a laminated film of Cu, Ni and Au films. In the plan view, the patterned conductors **23**, **23** have inner lead portions **23***a*, **23***a* inside the frame **40** and have outer lead portions **23***b*, **23***b* outside the color-changing member **70**. The heat transfer plate **21** is bonded to the wiring board **22** with a bonding sheet **25** that is made of an insulating adhesive film sheet and interposed therebetween. The material for the insulating substrate **22***a* may be a glass-epoxy resin such as FR4 or any other material such as a polyimide resin and a phenol resin.

In the wiring board **22**, a resist layer **26** made of a white-colored resin is also laminated on the surface of the insulating substrate **22***a*, opposite to the heat transfer plate **21** side, to cover part of the patterned conductors **23**, **23** and to cover a portion of the insulating substrate **22***a* where the patterned conductors **23**, **23** are not formed (see FIG. **3**). Therefore, light incident on the surface of the resist layer **26** from the side of the LED chip **10** is reflected therefrom so that absorption of the light from the LED chip **10** through the wiring board **22** surface opposite to the heat transfer plate **21** side can be prevented, which can increase the light output efficiency and thus can increase the optical output.

The resist layer **26** has an aperture **26***a* in which the inner lead portions **23***a*, **23***a* of the respective patterned conductors **23**, **23** are exposed in the vicinity of the aperture **24** of the wiring board **22**. The resist layer **26** also has apertures **26***b*, **26***b* in which the outer leads **23***b*, **23***b* of the respective patterned conductors **23**, **23** are exposed, respectively, at the peripheral portion of the wiring board **22**.

The LED chip **10** is a blue GaN LED chip that emits blue light and includes: an n-type electrically conductive SiC substrate **11**, which is used as a crystal growth substrate and whose lattice constant and crystal structure are closer to those of GaN than to those of a sapphire substrate; a light-emitting part **12** that is formed of GaN compound semiconductor materials on the main surface of the electrically conductive substrate **11** by an epitaxial growth method (such as the MOVPE method) and includes a laminated structure typically having a double heterostructure; a cathode electrode (n electrode, not shown) formed on the back surface of the electrically conductive substrate **11**; and an anode electrode (p electrode, not shown) formed on the front surface of the light-emitting part **12** (the uppermost surface on the main surface side of the electrically conductive substrate **11**). In general, the LED chip **10** has an anode electrode formed on one side and a cathode electrode formed on the other side. The cathode electrode and the anode electrode are each a laminated film of Ni and Au films. However, any other material capable of achieving good ohmic features, such as Al, may also be used as the material for the cathode and anode electrodes.

In the present embodiment, the LED chip **10** is mounted on the heat transfer plate **21** such that the light-emitting part **12** is placed more distant from the heat transfer plate **21** than from the electrically conductive substrate **11**. Alternatively, the LED chip **10** may be mounted on the heat transfer plate **21** such that the light-emitting part **12** is placed closer to the heat transfer plate **21** than to the electrically conductive substrate **11**. In view of light output efficiency, the light-emitting part **12** should preferably be placed to be distant from the heat transfer plate **21**. In the present embodiment, however, since the refractive index of the electrically conductive substrate **11** is substantially the same as that of the light-emitting part **12**, the light output loss does not significantly increase even when the light-emitting part **12** is placed to be close to the heat transfer plate **21**.

In the present embodiment, the LED chip **10** used is a blue LED chip, which emits blue light, and the electrically conductive substrate **11** used is a SiC substrate. However, a GaN substrate may be used in place of the SiC substrate. As is apparent from Table 1 below, the SiC or GaN substrate used as a crystal growth substrate can have high thermal conductivity and small thermal resistance as compared with a sapphire substrate, which is an insulator used as a crystal growth substrate as disclosed in Patent Literature 2. Alternatively, the color of the light emitted from the LED chip **10** may be any color other than blue, such as red and green. Specifically, any semiconductor material other than the GaN compound semiconductor material, such as a GaAs or GaP compound semiconductor material, may be used as the material for the light-emitting part **12**, depending on the color of the light to be emitted from the LED chip **10**. Any substrate other than the SiC substrate, such as a GsAs or GsP substrate, may also be used as the electrically conductive substrate **11**, depending on the material for the light-emitting part **12**.

TABLE 1

Crystal Growth Substrate	Thermal Conductivity (W/m · K)	Linear Expansion Coefficient ($\times 10^{-6}$/K)	Thermal Resistance (K/W)
6H—SiC	350	4.2	0.857
GaN	130	5.59	2.308
GaP	110	4.65	2.727
GaAs	54	5.9	5.556
Sapphire	42	5.3	7.143

In Table 1, the thermal resistance value is measured when heat is conducted in the thickness direction through the crystal growth substrate with a thickness of 0.3 mm and a cross-sectional area of 1 mm^2 perpendicular to the thickness direction.

The LED chip **10** is mounted on the heat transfer plate **21** with the sub-mount member **30** that is in the form of a rectangular plate larger in size than the LED chip **10** and interposed therebetween to relax the stress applied to the LED chip **10** due to the difference in coefficient of linear expansion between the LED chip **10** and the heat transfer plate **21**. The sub-mount member **30** has not only the function of relaxing the stress but also the function of conducting heat from the LED chip **10** to a certain area of the heat transfer plate **21** larger than the LED chip **10**.

It is preferred that the surface area of the heat transfer plate **21** on the LED chip **10** side should be sufficiently larger than that of the LED chip **10** on the heat transfer plate **21** side. For example, in order to efficiently exhaust heat from the LED chip **10** of 0.3 to 1.0 mm square, it is preferred that the contact area between the heat transfer plate **21** and an insulating layer **90** interposed between the heat transfer plate **21** and the fixture body **100** as described later should be increased and that the heat resistance should be reduced such that heat from the LED chip **10** can be uniformly conducted over a large

area. Therefore, the surface area of the heat transfer plate **21** on the LED chip **10** side is preferably 10 times or more that of the LED chip **10** on the heat transfer plate **21** side.

More specifically, the area of the heat transfer plate **21** (the area of the plane perpendicular to the thickness direction) should be determined such that the junction temperature of the LED chip can be equal to or lower than a certain temperature, which is set lower than the maximum junction temperature, when the ambient temperature, the optical output and the applied power for the LED chip **10** are set to meet the specified conditions for the light emission. It should be noted that in this process, the junction temperature of the LED chip **10** is not directly measured, and the area of the heat transfer plate **21** is determined such that the temperature of the fixture body **100**-facing surface of the heat transfer plate **21** (the other side of the heat transfer plate **21** opposite to the above side in the thickness direction) is equal to or lower than a specified temperature. In other words, if the conditions for the emission from the LED chip **10** are determined, the area of the heat transfer plate **21** can be determined. In order to reduce the area required for a single piece of the LED chip **10**, the area of the heat transfer plate **21** should preferably be reduced. In order to reduce the area of the heat transfer plate **21**, it is necessary to efficiently conduct heat from the LED chip **10** to the other side (the back surface).

In the plan view, a truncated cone may be provided in which the upper base is formed by a circle inscribed in the sub-mount member **30**-facing surface of the LED chip **10**, and the lower base is formed by a circle circumscribed about the other surface of the heat transfer plate **21**. As a result of experiments, it has been found that the generatrix of this truncated cone should preferably make an angle θ of 45° with the lower base (see FIG. **1**). In order to efficiently conduct heat from the LED chip **10** to the entire other surface of the heat transfer plate **21** with the angle set at about 45°, heat should preferably be conducted in a linear manner from the LED chip **10** to the other surface of the heat transfer plate **21**.

Therefore, it is preferred that the sub-mount member **30** should be dimensionally set such that the rim of the sub-mount member **30** is placed outside the generatrix of the truncated cone. In this case, linear heat flow can be achieved from the LED chip **10** to the edge of the other surface of the heat transfer plate **21** so that the heat generated at the LED chip can be efficiently conducted to the entire other surface of the heat transfer plate **21**.

In the present embodiment, AlN, which has relatively high thermal conductivity and insulating properties, is used as the material for the sub-mount member **30**. In the LED chip **10**, the cathode electrode is electrically connected to one of the patterned conductors **23** through the bonding wire **14** of a thin metal wire (such as a thin gold or aluminum wire) and through a patterned conductor **31** formed on the surface of the sub-mount member **30**, opposite to the heat transfer plate **21** side, and the anode electrode is electrically connected to the other patterned conductor **23** through the bonding wire **14**. In this structure, the sub-mount member **30** has a reflecting film (such as a laminated film of Ni and Ag films) that is formed around the patterned conductor **31** to reflect light from the side of the LED chip **10**. The LED chip **10** is bonded to the sub-mount member **30** with a lead-free solder such as AuSn and SnAgCu.

The material for the sub-mount member **30** is not limited to AlN. As is apparent from Table 2, for example, other materials having relatively high thermal conductivity and having a linear expansion coefficient relatively close to that of 6H—SiC (the material of the electrically conductive substrate **11**) may also be used, such as CuW, W, complex SiC, and Si. When an electrically conductive material such as CuW and W is used as the material for the sub-mount member **30**, forming the patterned conductor **31** is not necessarily required.

TABLE 2

Materials		Linear Expansion Coefficient ($\times 10^{-6}$/K)	Thermal Conductivity (W/m · K)
Materials for Crystal Growth Substrate	6H—SiC	4.2	350
	GaN	5.59	130
	GaP	4.65	110
	GaAs	5.9	54
	Sapphire	5.3	42
Materials for Sub-Mount Member	Al	23.2	237
	Cu	16.6	398
	W	4.5	178
	CuW	6.4	160
	Si	2.6	168
	AlN	4.6	165
	Alumina	7.1	29
Bonding Materials	Au	14.2	315
	63Sn—37Pb	21.0	50
	Silver Paste	70.0	1.1

When the heat transfer plate **21** is made of Cu, the sub-mount member **30** may be made of CuW or W so that the sub-mount member **30** can be directly bonded to the heat transfer plate **21**. As shown in Table 3 below, for example, the direct bonding between the sub-mount member **30** and the heat transfer plate **21** can increase the joint area between the sub-mount member **30** and the heat transfer plate **21** and reduce the heat resistance of the joint portion between the sub-mount member **30** and the heat transfer plate **21** as compared with brazing between the sub-mount member **30** and the heat transfer plate **21**. While the LED chip **10** may be bonded to the sub-mount member **30** with a solder such as SnPb, AuSn, and SnAgCu, or a silver paste, they are preferably bonded to each other with a lead-free solder such as AuSn and SnAgCu. When the sub-mount member **30** is made of Cu and when AuSn is used for bonding, a metal layer of Au or Ag should be formed by pre-treatment on the surface of the sub-mount member **30** to be bonded.

TABLE 3

	Brazing	Direct Bonding
Joint Area	60 to 80%	Almost 100%
Bonding Strength	98 N/mm^2 or more	127 N/mm^2 or more
Shear Strength	98 N/mm^2	127 N/mm^2
Joint Portion	Flux remains in some cases.	

When the sub-mount member **30** is made of W and directly bonded to the heat transfer plate **21**, as apparent from Table 4 below, an increased thermal conductivity and a reduced thermal resistance can be provided as compared with when the sub-mount member **30** and the heat transfer plate **21** are bonded with a silver brazing. When the heat transfer plate **21** is made of Cu and when AlN, complex SiC or the like is used as the material for the sub-mount member **30**, the heat transfer plate **21** and the sub-mount member **30** may be bonded to each other with a lead-free solder such as AuSn and SnAgCu. When AuSn is used for bonding, a metal layer of Au or Ag should be formed by pre-treatment on the surface of the heat transfer plate **21** to be bonded.

TABLE 4

	Ag Brazing	Direct Bonding
Thermal Conductivity (W/m · K)	185.4	211.8

In the present embodiment, the sub-mount member **30** of the light-emitting device **1** has such a thickness that the surface of the sub-mount member **30** is more distant from the heat transfer plate **21** than from the surface of the resist layer **26** of the wiring board **22**. Therefore, light emitted from the LED chip **10** to the side can be prevented from being absorbed into the wiring board **22** through the inner circumference surface of the aperture **24** of the wiring board **22** and can also be prevented from being released through the joint between the color-changing member **70** and the mount board **20** (namely, blue light from the LED chip **10** can be prevented from bypassing the color-changing member **70** to the outside). As described above, the reflecting film **32** for reflecting light from the LED chip **10** is formed on the surface of the sub-mount member **30** around the patterned conductor **31** at the site where the LED chip **10** is bonded. Therefore, light from the side of the LED chip **10** can be prevented from being absorbed into the sub-mount member **30** so that the light output efficiency can be further increased.

As shown in FIG. **4**, the LED chip **10** and the sub-mount member **30** of the light-emitting device **1** each has a two-dimensionally square peripheral shape. In the plan view, the LED chip **10** is bonded at the center portion of the sub-mount member **30** such that the peripheral line of the LED chip **10** is located inside the peripheral line of the sub-mount member **30** and that both peripheral lines do not become parallel to each other, so that the diagonal line of the LED chip **10** is not parallel to that of the sub-mount member **30**. More specifically, the LED chip **10** is bonded at the center portion of the sub-mount member **30** such that the diagonal line of the LED chip **10** makes an angle of about 45° with that of the sub-mount member **30**.

Therefore, the direct distance between both ends of the bonding wire **14** extended along a diagonal line of the LED chip **10** (namely, the distance between the electrode on the surface of the LED chip and the inner lead portion **23***a* of the patterned conductor **23** electrically connected to the electrode via the bonding wire) can be shortened, while the two-dimensional size of the sub-mount member **30** is not reduced, as compared with a case where the peripheral lines of the LED chip **10** and the sub-mount member **30** are parallel to each other, so that a bonding wire **14**-induced reduction in light output efficiency can be suppressed and that the size of the frame **40** and the overall size of the light-emitting device **1** can be reduced. In summary, a bonding wire **14**-induced reduction in light output efficiency can be suppressed, and the size of the frame **40** and the overall size of the light-emitting device **1** can be reduced, with no degradation in the heat transfer function of the sub-mount member **30**.

The encapsulant resin used as the material for the encapsulant part **50** is a silicone resin. However, the material is not limited to a silicone resin but may be an acrylic resin or the like.

The frame **40** is in the form of a cylinder. The frame **40** and the optical component **60** are integrally formed of the same optically transparent material (such as silicone) (in other words, the optical component **60** and the frame **40** are continuously and integrally formed). In a lens block composed of the frame **40** and the optical component **60**, the space surrounded by the frame **40** and the optical component **60** forms recess for housing the LED chip. The frame **40** and the optical component **60** each have the same refractive index and the same linear expansion coefficient as the encapsulation part **50**. The frame **40** and the optical component **60** may be integrally formed of an optically transparent material whose refractive index and elastic modulus are not lower than those of the encapsulant resin material of the encapsulation part **50**. For example, when the encapsulant resin is an acrylic resin, the optical component **60** and the frame **40** may be integrally formed of an acrylic resin. The optically transparent materials for the optical component **60** and the frame **40** may have substantially the same linear expansion coefficient as that of the encapsulant resin.

The optical component **60** has a light incidence surface **60***a* and a light output surface **60***b*. The light incidence surface **60***a* is formed on the encapsulation part **50** side and in the form of a plane. The light output surface **60***b* is a convex surface and forms a plano-convex lens that does not allow light from the light incidence surface **60***a* to be totally reflected at the interface between the light output surface **60***b* and the air layer **80** described above. The optical component **60** is placed such that the optical axis of the optical component **60** is aligned with the center line of the light-emitting part **12** along the thickness direction of the LED chip **10**. The light emitted from the side of the LED chip **10** is transmitted through the encapsulation part **50** and then transmitted through the optical component **60** or the frame **40** and the air layer **80** and reaches the color-changing member **70** to excite the fluorescent material of the color-changing member **70** or passes through the color-changing member **70** without colliding with the fluorescent material.

The color-changing member **70** includes a formed product of a mixture of an optically transparent material such as silicone and particles of a yellow fluorescent material that emits broad yellow light when excited by blue light from the LED chip **10** (namely, the color-changing member **70** is composed of the optically transparent material and the fluorescent material). Therefore, blue light from the LED chip **10** and light from the yellow fluorescent material are released through the outer surface **70***b* of the color-changing member **70** so that the light-emitting device **1** can produce white light. The optically transparent material for use in the color-changing member **70** is not limited to silicone and may be an acrylic resin, glass, or an organic-inorganic hybrid material in which organic and inorganic components are mixed and bound at a nanometer or molecular level. The fluorescent material for use in combination with the optically transparent material of the color-changing member **70** is also not limited to a yellow fluorescent material. For example, red and green fluorescent materials may be mixed so that white light can be produced.

The color-changing member **70** has an inner surface **70***a* that is formed so as to be along the light output surface **60***b* of the optical component **60** and the outer surface of the frame **40**. Therefore, the distance between the light output surface **60***b* and the inner surface **70***a* of the color-changing member **70** is substantially constant in the normal direction at all positions in the light output surface **60***b* of the optical component **60**. The color-changing member **70** is formed such that its thickness along the normal direction is constant at all positions. For example, the color-changing member **70** may be bonded to the mount board **20** with an adhesive (such as a silicone resin, an epoxy resin or the like) at its edge on the mount board **20** side (the circular end of its opening).

As described above, the color-changing member **70** is placed such that the air layer **80** is formed between the color-changing member **70** and the light output surface **60***b* of the optical component **60** or the outer surface of the frame **40**

(namely inside the color-changing member **70**). The air layer **80** inside the color-changing member **70** can function as a thermal insulation layer to suppress the transfer of heat from the fluorescent material of the color-changing member **70** to the LED chip and to inhibit an increase in temperature of the LED chip. In addition, a reduction in yield attributable to the accuracy of dimension or alignment of the color-changing member **70** can be prevented, because bonding of the color-changing member **70** to the optical component **60** and the frame **40** is not necessary. In the process of assembling the light-emitting device **1**, the color-changing member **70** may be incorporated by the final step, and the blending ratio of the fluorescent material to the optically transparent material in the color-changing member **70** may be controlled depending on the emission wavelength of the LED chip **10**. Therefore, variations in the color can also be reduced using the color-changing member **70** controlled as described above.

As described above, the air layer **80** is formed between the color-changing member **70** and the optical component **60** or the frame **40**. Therefore, the color-changing member **70** is less likely to come into contact with the optical component **60** or the frame **40**, when an external force is applied to the color-changing member **70** to deform it, and the stress generated on the color-changing member **70** by the external force can be prevented from being transmitted to the LED chip or each bonding wire **14**, so that fluctuations in the emission characteristics of the LED chip **10** or the breaking of each bonding wire **14** is less likely be caused by the external force. Therefore, the reliability is advantageously increased. The air layer **80** formed as described above also provides the advantage that the moisture in the external atmosphere is less likely to reach the LED chip **10** and the advantage that when light emitted from the LED chip **10** enters the color-changing member **70** and is scattered by particles of the yellow florescent material in the color-changing member **70**, the quantity of light scattered and transmitted through the optical component **60** or the frame **40** can be reduced so that the total light output efficiency of the light-emitting device **1** can be increased.

In the LED lighting fixture of the present embodiment, each light-emitting device **1** is bonded to the fixture body **100** with an insulating layer **90** interposed therebetween (specifically, each light-emitting device **1** is mounted on the bottom wall **100***a* of the fixture body **100** with the insulating layer **90** interposed therebetween). The insulating layer **90** has electrical insulating properties and is interposed between the heat transfer plate **21** and the fixture body **100** to thermally couple them.

In this structure, a bonding member made of a resin sheet that contains a filler of silica, alumina or the like and is capable of being reduced in viscosity when heated (for example, a organic green sheet such as an epoxy resin sheet highly charged with fused silica) is used to form the insulating layer **90**. Alternatively, a green sheet made of a sheet-shaped green ceramic may be used as the insulating layer **90**.

If a conventional radiating rubber sheet (heat transfer sheet) is interposed in place of the insulating layer **90**, the heat transfer plate **21** and the radiating sheet can be insufficiently bonded to each other so that a void may be formed between them to increase the thermal resistance or cause variations in the thermal resistance of the portion from each light-emitting device **1** to the fixture body **100**. Therefore, torque control is required when a load is applied to the heat transfer plate **21** and the like. If an insulating grease is used to form the insulating layer **90**, formation of a void between the heat transfer plate **21** and the insulating layer **90** can be prevented, but the insulating layer **90** can undergo secular changes (such as a change in viscosity and shrinkage) so that a void can be formed between them to increase the thermal resistance or cause variations in the thermal resistance of the portion from each light-emitting device **1** to the fixture body **100**.

In contrast, the bonding member made of the resin sheet having electrical insulating properties and high thermal conductivity also has high flowability during heating and high adhesion to irregular surfaces. Therefore, formation of a void between the bonding member and the heat transfer plate **21** or the fixture body **100** can be prevented in the process of bonding the heat transfer plate **21** of the mount board **20** to the metal fixture body **100** (the process of bonding the heat transfer plate **21** to the fixture body **100** by interposing the bonding member between the heat transfer plate **21** and the bottom wall **100***a* of the fixture body **100** and then heating the bonding member), so that adhesion reliability can be increased, while secular changes can be reduced, and an insufficient adhesion-induced increase or variation in thermal resistance can be prevented. It is also possible to prevent an increase in thermal resistance, which would otherwise be caused by formation of a void between the heat transfer plate **21** and the insulating layer **90** due to the secular change of the insulating layer **90**. When the insulating layer **90** has an effective contact area of 25 mm^2 for heat transfer and a thickness of 0.1 mm, the insulating layer **90** should satisfy the requirement of having a thermal conductivity of 4 W/m·K or more in order that the thermal resistance of the insulating layer **90** may be controlled to 1 K/W or less. If the organic green sheet described above is used as the resin sheet, this requirement will be satisfied.

The LED lighting fixture of the present embodiment may be manufactured as described below. For example, the mount board **20** (a component of each light-emitting device **1**) is first bonded to the fixture body **100** with the insulating layer **90** interposed therebetween by a thermocompression bonding technique or the like. The sub-mount member **30** to which the LED chip **10** has been previously bonded is then bonded to the heat transfer plate **21**. Each electrode of the LED chip **10** is then electrically connected to each patterned conductor **23** of the mount board **20** through bonding wires **14**, **14**. As shown in FIG. **5**, the LED chip **10** and the bonding wires **14**, **14** are then covered with a first liquid encapsulant resin material **50***a* (such as a silicone resin) which will be a part of the encapsulation part **50**. Thereafter, a second liquid encapsulant resin material (such as a silicone resin) which is the same as the first encapsulant resin material **50***a* and will be the other part of the encapsulation part **50** is injected into the space surrounded by the optical component **60** and the frame **40**. The optical component **60** is then placed opposite to the mount board **20** such that the frame **40** is interposed between the optical component **60** and the mount board **20**, and the respective encapsulant resin materials **50***a* and **50***b* are cured to form the encapsulation part **50**. The color-changing member **70** is then bonded to the wiring board **22** of the mount board **20** with an adhesive (such as a silicone resin and an epoxy resin). In the present embodiment, the circular aperture **26***a* formed at the central portion of the resist layer **26** of the mount board **20** has an inner diameter slightly larger than the maximum outer diameter of a protective cover (color-changing member) **70**. In the process of potting, part of the first encapsulant resin material **50***a* flowing to the vicinity of the inner peripheral surface of the aperture **26***a* is used as the adhesive for bonding the protective cover **70** to the mount board **20**. Thereafter, the circuit board **200** is housed in and attached to the fixture body **100** and electrically connected to each light-emitting device **1** and to each wire, and the front cover is attached to the fixture body **100**.

As shown in FIG. **6**, another manufacturing method may be considered that include: electrically connecting the LED chip **10** to the bonding wires **14**, **14**; then injecting a liquid encapsulant resin material **50***c* (such as a silicone resin) for forming the encapsulation part **50** into the space surrounded by the optical component **60** and the frame **40**; then placing the optical component **60** opposite to the mount board **20** such that the frame **40** is interposed between the optical component **60** and the mount board **20**; and curing the encapsulant resin material **50***c* to form the encapsulation part **50**. However, this production method has the risk of causing a void in the encapsulation part **50** in the manufacturing process. Therefore, the former manufacturing method should be used so that the manufacturing process can be less likely to cause a void in the encapsulation part **50** and can provide a highly-reliable, high-power light-emitting device **1**. If the first encapsulant resin material **50***a* is cured before the second encapsulant resin material **50***b* is injected, the viscosity of the first encapsulant resin material **50***a* can be reduced so that a void trapped in the housing hole can be advantageously and easily removed.

The inner diameter of the aperture **26***a* at the central portion of the resist layer **26** may also be set slightly smaller than the maximum inner diameter of the protective cover **70**, and the mount board **20** side-end of the protective cover **70** may be bonded to the peripheral portion of the aperture **26***a* of the resist layer **26** over the entire circumference with a bonding portion **75** made of an adhesive. In this case, the thickness of the bonding portion **75** interposed between the protective cover **70** and the mount board **20** can be easily controlled, and the reliability of the bonding between the protective cover and the mount board **20** can be increased. The adhesive for the bonding portion **75** is preferably the same as a material of the protective cover **70**.

As described above, in the LED lighting fixture of the present embodiment, each light-emitting device **1** is bonded to the fixture body **100** with the insulating layer **90** interposed therebetween, and the insulating layer **90** has electrical insulating properties and is interposed between the heat transfer plate **21** and the fixture body **100** to thermally couple them. Therefore, heat generated at each light-emitting device **1** during lighting can be transferred to and released from the metal fixture body **100** through the insulating layer **90** without passing through the circuit board **200** having a relatively large thickness. As compared with a conventional structure having a radiating rubber sheet such as Sarcon (Registered Trademark) interposed between the circuit board **300** of an LED unit and a fixture body (see FIGS. **18** and **19**), the present embodiment can reduce the thermal resistance of the portion from the LED chip **10** to the fixture body **100**, increase the heat radiation performance, reduce variations in thermal resistance, and suppress the rise of the junction temperature of the LED chip **10**, so that the input power and the light output power can be increased. In addition, the total thickness of the heat transfer plate **21** and the sub-mount member **30** in each light-emitting device **1** can be smaller than the thickness of the circuit board **300**.

When used at the same light output power as a conventional LED lighting fixture, the LED lighting fixture of the present embodiment has the advantage that the junction temperature of the LED chip **10** can be lowered so that the LED chip **10** can have a long life, as compared with the conventional LED lighting fixture. In the LED lighting fixture of the present embodiment, the light-emitting device **1** has outer lead portions **23***b*, **23***b* that are formed by part of the patterned conductors **23**, **23** on the LED chip **10** mount side of the mount board **20**. Therefore, the light-emitting devices **1** may be connected through lead wires as appropriate without a circuit board **200** so that cost reduction can be achieved and that the flexibility of placement of the light-emitting devices **1** can be increased to facilitate the change of the number or layout of the light-emitting devices **1**.

In each light-emitting device **1** of the LED lighting fixture of the present embodiment, the LED chip **10** is mounted on the heat transfer plate **21** with the sub-mount member **30** that is interposed therebetween and relaxes the stress applied to the LED chip **10** due to the linear expansion coefficient difference between the LED chip **10** and the heat transfer plate **21**. Therefore, it is possible to prevent breakage of the LED chip **10** caused by the linear expansion coefficient difference between the LED chip **10** and the heat transfer plate **21** and to increase the reliability. However, the sub-mount member **30** is not necessarily provided between the LED chip **10** and the heat transfer plate **21**, when the linear expansion coefficient difference between the LED chip **10** and the heat transfer plate **21** is relatively small. If the sub-mount member **30** is omitted between the LED chip **10** and the heat transfer plate **21**, the distance between the LED chip **10** and the bottom wall **100***a* of the metal fixture body **100** can be reduced so that the thermal resistance of the portion from the light-emitting part **12** of the LED chip **10** to the fixture body **100** can be reduced and that the heat radiation performance can be further increased. Therefore, the light output power can be further increased.

The area of the sub-mount member **30** may be larger than that of the LED chip **10**, and when the generatrix of a truncated cone having an upper base formed by a circle inscribed in the sub-mount member **30**-facing surface of the LED chip **10** and having a lower base formed by a circle circumscribed about the other surface of the heat transfer plate **21** makes an angle θ of about 45° with the lower base, the sub-mount member **30** may be dimensionally set such that the rim of the sub-mount member **30** is placed outside the truncated cone, so that the heat from the LED chip **10** can be transferred to the entire other surface of the heat transfer plate **21** and that linear heat flow can be made to efficiently dissipate the heat.

In the LED lighting fixture of the present embodiment, the two-dimensional size of the insulating layer **90** is set larger than that of the heat transfer plate **21** so that the creeping distance between the heat transfer plate **21** made of a metallic material and the fixture body **100** (a metallic component) can be increased and that the lighting surge resistance can be enhanced, as compared with a case where the insulating layer **90** and the heat transfer plate **21** are formed in the same two-dimensional size. While the thickness of the insulating layer **90** should be designed depending on the desired withstand voltage, the insulating layer **90** is preferably set as thin as possible in terms of reducing the thermal resistance. Therefore, after the thickness of the insulating layer **90** is determined, the two-dimensional size should be determined to meet the requirement of the creeping distance.

In the LED lighting fixture of the present embodiment, the frame **40** of each light-emitting device **1** is made of an optically transparent material whose linear expansion coefficient is substantially the same as that of the encapsulant resin (the material for the encapsulation part **50**) and whose refractive index and elastic modulus are not lower than those of the encapsulant resin, respectively. Therefore, the present embodiment can reduce the linear expansion difference between the frame **40** and the encapsulation part **50** and suppress formation of a void in the encapsulation part **50** at low temperature during a heat cycle test, as compared with a case where the frame **40** is made of a metallic material (such as Al). Therefore, the reliability can be increased, and the light

reflection loss can be reduced on the frame **40**, so that the light output power can be increased.

The frame **40** and the optical member **60** are integrally formed in the present embodiment. Alternatively, as shown in FIG. **9**, the frame **400** may be provided separately from the optical component **600**. In FIG. **9**, the optical component **600** includes a biconvex lens having a convex light incidence surface **600***a* on the encapsulation part **50** side and a convex light output surface **600***b*. In this case, after the frame **400** is bonded to the mount board **20**, the encapsulant resin may be charged (by potting) into the interior of the frame **400** and then cured to form the encapsulation part **50**. Thereafter, the optical component **600** may be bonded to the encapsulation part **50** and the frame **400**.

Embodiment 2

An LED lighting fixture according to the present embodiment is described below with reference to FIGS. **10** to **17** attached hereto.

The basic configuration of the LED lighting fixture of the present embodiment is substantially the same as that of Embodiment 1, except that there are differences in the structures of the light-emitting device **1** and the circuit board **200** between them. It should be noted that the same element as in Embodiment 1 is represented by the same reference mark, and a description thereof is omitted.

In the present embodiment, the light-emitting device **1** does not include the frame **40** described in Embodiment 1; the optical component **60** for controlling the distribution of light emitted from the LED chip **10** is in the form of a dome and placed on one side of the mount board **20** so as to house the LED chip **10** together with the mount board **20**; the space surrounded by the optical component **60** and the mount board **20** is filled with the encapsulation part **50** in which the LED chip **10** and the bonding wires **14**, **14** electrically connected to the LED chip **10** are encapsulated; and the color-changing member **70** is provided such that the air layer **80** is formed between the color-changing member **70** and the light output surface **60***b* of the optical component **60** on the one side of the mount board **20**.

In the present embodiment, the wiring board **22** of the mount board **20** used is a flexible printed wiring board including an insulating substrate **22***a* made of a polyimide film and a pair of patterned power-supply conductors **23**, **23** formed on one side of the substrate **22***a*.

In the present embodiment, the respective patterned conductors **23**, **23** of the wiring board **22** are formed so as to have a rim slightly smaller than half of the rim of the insulating substrate **22***a*. FR4, RF5, paper phenol, or the like may also be used as the material for the insulating substrate **22***a*.

The resist layer **26** is patterned such that the respective patterned conductors **23**, **23** are exposed at two locations in the vicinity of the aperture **24** of the wiring board **22** and exposed at one location in the peripheral portion of the wiring board **22**. The respective patterned conductors **23**, **23** have inner lead portions **23***a* (terminal portions) and outer lead portions **23***b* (electrode portions for external connection). The inner lead portions **23***a* are composed of two rectangular portions exposed in the vicinity of the aperture **24** of the wiring board **22**, and the outer lead portions **23***b* is composed of a circular portion exposed in the peripheral portion of wiring board **22**.

In the present embodiment, the LED chip **10** used has anode electrodes **13***a* at adjacent two of the four corners (see FIGS. **12** and **14**A) and cathode electrodes **13***b* at the other two corners, on one surface side. Each anode electrode **13***a* is electrically connected to one of the patterned conductors **23** through the bonding wire **14**, and each cathode electrode **13***b* is electrically connected to the other patterned conductor **23** through the bonding wire **14**. Out of the two outer lead portions **23***b*, the outer lead portion **23***b* (on the right in FIG. **12**) electrically connected to each anode electrode **13***a* of the LED chip **10** is marked with "+," and the outer lead portion **23***b* (on the left in FIG. **12**) electrically connected to each cathode electrode **13***b* of the LED chip **10** is marked with "–." In the light-emitting device **1**, therefore, the polarity of both outer lead portions **23***a* and **23***b* are visually recognizable so that misconnection can be prevented.

In the present embodiment, the aperture **24** of the wiring board **22** is rectangular, and as shown in FIG. **14**A, the inner lead portion **23***a* is provided in the vicinity of the center of each side of the rectangular aperture **24**. Alternatively, as shown in FIG. **14**B, the inner lead portion **23***a* may be provided in the vicinity of one end of each side of the aperture **24**. In this case, the full length of the bonding wire **14** can be longer so that breakage of the bonding wire **14** due to the expansion and contraction of the encapsulation part **50** can be less likely to occur and that the reliability can be increased.

In the present embodiment, the LED chip **10** is a blue LED chip using a 6H—SiC substrate as the crystal growth substrate, and AlN, which has relatively high thermal conductivity and insulating properties, is used as the material for the sub-mount member **30** as in Embodiment 1. However, the material for the sub-mount member **30** is not limited to AlN and may be any other material having a relatively high thermal conductivity and a liner expansion coefficient relatively close to that of 6H—SiC (the material for the crystal growth substrate), such as complex SiC, Si, Cu, and CuW.

In the present embodiment, the sub-mount member **30** of the light-emitting device **1** also has such a thickness that the surface of the sub-mount member **30** is more distant from the heat transfer plate **21** than from the surface of the resist layer **26** of the wiring board **22**. Therefore, light emitted from the LED chip **10** to the side can be prevented from being absorbed into the wiring board **22** through the inner circumference surface of the aperture **24** of the wiring board **22**. If, as in Embodiment 1, a reflecting film for reflecting light from the LED chip **10** is formed on the surface of the sub-mount member **30** around the joint portion with the LED chip **10** on the side where the LED chip **10** is bonded, light from the side of the LED chip **10** can be prevented from being absorbed into the sub-mount member **30** so that the light output efficiency can be further increased.

The optical component **60** is made of an optically transparent material (such as silicone) as in Embodiment 1, but it is in the form of a dome, not in the form of a plano-convex lens as in Embodiment 1. In the present embodiment, the light output surface **60***b* of the optical component **60** is in the form of a convex surface that does not allow light from the light incidence surface **60***a* to be totally reflected at the interface between the light output surface **60***b* and the air layer **80** described above. The optical component **60** is placed such that its optical axis coincides with that of the LED chip **10**. Therefore, light emanating from the LED chip **10** and entering the light incidence surface **60***a* of the optical component **60** can easily reach the color-changing member **70** without being totally reflected at the interface between the light output surface **60***b* and the air layer **80** so that the total luminous flux can be increased. The light emitted from the side of the LED chip **10** is transmitted through the encapsulation part **50** and then transmitted through the optical component **60** and the air layer **80** and reaches the color-changing member **70** to excite the fluorescent material of the color-changing member **70** or

passes through the color-changing member **70** without colliding with the fluorescent material. The optical component **60** is also formed such that its thickness along the normal direction is constant at all positions.

The color-changing member **70** has an inner surface **70***a* that is formed so as to be along the light output surface **60***b* of the optical component **60**. Therefore, the distance between the light output surface **60***b* and the inner surface **70***a* of the color-changing member **70** is substantially constant in the normal direction at all positions in the light output surface **60***b* of the optical component **60**.

The light-emitting device **1** may be manufactured by the method described below. For example, after the LED chip **10** is electrically connected to the respective patterned conductors **23**, **23** through the two bonding wires **14**, respectively, the front end of the nozzle **401** of a dispenser **400** is aligned with a resin injection hole **28** that is formed continuously with the aperture **24** of the wiring board **22**, and a liquid encapsulant resin (such as a silicone resin), which will be a part of the encapsulation part **50**, is injected into the space between the sub-mount member **30** and the wiring board **22** and cured (a resin portion **50***d* made of the encapsulant resin is shown in FIG. **13**). A liquid encapsulant resin (such as a silicone resin), which will be the other part of the encapsulation part **50**, is injected into the interior of the dome-shaped optical component **60**. Thereafter, the optical component **60** is placed at a given location on the mount board **20**, and the encapsulant resin is cured, so that the encapsulation part **50** is formed, while the optical component **60** is bonded to the mount board **20**. Thereafter, the color-changing member **70** is bonded to the mount board **20**. This manufacturing method can suppress formation of a bubble (void) in the encapsulation part **50** during the manufacturing process and reduce the possibility of void-induced stress concentration on the boding wire **14** so that the reliability can be increased. Even when such a manufacturing method is used, however, there is the risk of forming a bubble (void) in the encapsulation part **50** during the manufacturing process. Therefore, a relatively large amount of the liquid encapsulant resin should be injected into the optical component **60**.

When this manufacturing method is used, however, the process of placing the optical component **60** at a given place on the mount board **20** can involve the overflow of part of the liquid encapsulant resin from the space surrounded by the optical component **60** and the mount board **20** and involve the spread of the resin on the surface of the resist layer **26**. The overflowing encapsulant resin can form an unnecessary portion which can cause absorption of light or have irregularities to cause diffused reflection of light so that the total light output efficiency of the light-emitting device **1** can be reduced.

In the light-emitting device **1** of the present embodiment, therefore, a plurality of resin trapping holes **27** for receiving the encapsulant resin overflowing from the space surrounded by the optical component **60** and the mount board **20** are formed at intervals on the one side of the mount board **20** in the circumferential direction of the optical component **60** between the portion overlaid with the annular edge of the optical component **60** and the portion overlaid with the annular edge of the color-changing member **70**. In this structure, each resin trapping hole **27** includes a through hole **27***a* formed in the wiring board **22** and a dent portion **27***b* formed on the heat transfer plate **21** at a site corresponding to the through hole **27***a*. Even when the wiring board **22** is thin, therefore, the resin trapping hole **27** can be made deep such that a relatively large amount of the encapsulant resin can be trapped in the hole **27**. In addition, the encapsulant resin cured in the resin trapping hole **27** can function as a heat insulating part to block heat transfer from the LED chip **10** to the color-changing member **70** so that an increase in temperature of the color-changing member **70** associated with heat generation from the LED chip **10** can be suppressed. Therefore, it is possible to suppress a reduction in the luminous efficiency of the fluorescent material, which is caused by heat generation from the LED chip **10**.

The light-emitting device **1** also has a light absorption-preventing ring board **140** that covers each resin trapping hole **27** and is placed on the one side of the mount board **20** between the portion overlaid with the annular edge of the optical component **60** and the portion overlaid with the annular edge of the color-changing member **70**. The light absorption-preventing board **140** prevents absorption of light into the cured encapsulant resin portion entrapped in each resin trapping hole **27**. On the side opposite to the mount board **20** side, the light absorption-preventing board **140** has a white-colored resist layer to reflect light from the LED chip **10**, the color-changing member **70** or the like so that the light absorption can be prevented. The light absorption-preventing board **140** may be placed on the one side of the mount board **20**, after the overflowing encapsulant resin is trapped in each resin trapping hole **27** in the process of placing the optical component **60** at a given location on the mount board **20**. Thereafter, the light absorption-preventing board **140** may be bonded to the mount board **20** with the encapsulant resin in the process of curing the encapsulant resin. The light absorption-preventing ring board **140** also has a plurality of notches **142** through which a small part of each resin trapping hole **27** is exposed, so that formation of a void can be prevented when the encapsulant resin is cured in the resin trapping hole **27**.

In the light-emitting device **1** described above, the resin trapping holes **27** are formed on the one side of the mount board **20** between the portion overlaid with the mount board **20** side-edge of the optical component **60** and the portion overlaid with the mount board **20** side-edge of the color-changing member **70**. Therefore, the encapsulant resin is trapped in the resin trapping holes **27** and prevented from overflowing in the process of bonding the color-changing member **70** to the mount board **20**, and the encapsulant resin is prevented from overflowing and forming an unnecessary portion on the one side of the mount board **20**, so that a reduction in light output efficiency can be prevented, which would otherwise be caused by absorption of light into the unnecessary portion or by diffused reflection of light on irregularities of the unnecessary portion. Therefore, light output power can be increased.

In the light-emitting device **1** of the present embodiment, the plurality of resin trapping holes **27** are placed at intervals in the circumferential direction of the optical component **60**. Therefore, while the distance between the portion overlaid with the mount board **20** side-edge of the optical component **60** and the portion overlaid with the mount board **20** side-edge of the color-changing member **70** can be shortened on the one side of the mount board **20**, the encapsulant resin can be prevented from forming an unnecessary portion on the one side of the mount board **20**. The separation of the patterned conductors **23**, **23** by the resin trapping holes **27** is also prevented so that the power supply wiring for the LED chip **10** can have low resistance.

Referring to FIGS. **16** and **17**, a circuit board **200** has a wire insertion hole **206** formed therethrough. A pair of power supply wires (lead wires) are inserted into the hole **206** through an insertion hole **100***c* formed through the bottom wall **100***a* of the fixture body **100** and electrically connected. The circuit board **200** also has patterned wirings **202** and a

light reflecting layer **203** that covers the major portions of the patterned wirings **202** and formed of a white-colored resist layer on the surface opposite to the bottom wall **100***a* side of the fixture body **100**.

The circuit board **200** has apertures **204**. The size of each aperture **204** is slightly larger than the two-dimensional size of the mount board **20** of the light-emitting device **1**. When viewed from the top, the mount board **20** of the light-emitting device **1** according to the present embodiment has four chamfered corners, in which the chamfered corners in the vicinity of the respective outer lead portions **23***b* (the left and right chamfered corners in FIG. **16**) each have a radius of curvature larger than that of the other two chamfered corner (the upper and lower chamfered corners in FIG. **16**). On the one side of the circuit board **200**, therefore, the patterned wirings **202** can be formed in a relatively large area. As shown in FIG. **17**, in order to prevent the application of overvoltage to the LED chip **10** of the light-emitting device **1**, an overvoltage-preventing, surface-mounted Zener diode **231** and a surface-mounted ceramic capacitor **232** are mounted on the circuit board **200** in the vicinity of each aperture **204**.

In the light-emitting device **1**, each outer lead portion **23***b* of the mount board **20** is electrically connected to the patterned conductor **202** of the circuit board **200** through a terminal plate **210**. In this structure, the terminal plate **210** includes terminal portions **211** and **212**. The terminal portion **211** is formed by bending one end of a slender metal plate into an L-shape and bonded to the patterned wiring **202** with a solder or the like such that its thickness direction coincides with that of the patterned wiring **202**. The terminal portion **212** is formed by bending the other end of the slender metal plate into a J-shape and bonded to the outer lead portion **23***b* with a solder or the like such that its thickness direction coincides with that of the outer lead portion **23***b*. This structure can relax the stress generated at the joint portion between the joining terminal **210** and each of the outer lead portion **23***b* and the patterned wiring **202** due to the linear expansion coefficient difference between the fixture body **100** and the circuit board **200**, so that the reliability of the connection between each light-emitting device **1** and the circuit board **200** can be increased.

Also in the LED lighting fixture of the present embodiment described above, each light-emitting device **1** is bonded to the fixture body **100** with the insulating layer **90** interposed therebetween, and the insulating layer **90** has electrical insulating properties and is interposed between the heat transfer plate **21** and the fixture body **100** to thermally couple them, as in Embodiment 1. As compared with a conventional structure having a radiating rubber sheet such as Sarcon (Registered Trademark) interposed between the circuit board **300** of an LED unit and a fixture body (see FIGS. **18** and **19**), therefore, the present embodiment can reduce the thermal resistance of the portion from the LED chip **10** to the fixture body **100**, increase the heat radiation performance, reduce variations in thermal resistance, and suppress the rise of the junction temperature of the LED chip **10**, so that the input power and the light output power can be increased.

In each of the above-described embodiments, the insulating layer **90** is provided for each light-emitting device **1**. Alternatively, a single piece of the resin sheet slightly smaller than the bottom wall **100***a* of the fixture body **100** may be shared amount the plurality of light-emitting devices **1**. The optical component **60** is not necessarily provided and may be provided as needed. When the color of the emission from the LED chip **10** is the desired color for the light-emitting device **1**, a protective cover made of a fluorescent material-free, optically transparent material may be provided in place of the color-changing member **70**. The fixture body **100** may also be in any other form such as the form of a flat plate. While a spotlight is illustrated as the LED lighting fixture in each of the embodiments, LED lighting fixtures to which the technical idea of the present invention is applicable include not only spotlights but also a variety of other LED lighting fixtures such as ceiling lights to be attached to building elements such as ceiling members.

The invention claimed is:

1. An LED lighting fixture comprising:

a light-emitting device that includes

an LED chip,

a heat transfer plate made of a thermally conductive material and having one side on which the LED chip is mounted,

a sub-mount member interposed between the LED chip and the heat transfer plate,

a wiring board having on one side a patterned conductor for supplying an electric power to the LED chip, being bonded to an LED chip mount-side of the heat transfer plate, and being formed with an exposure part through which the LED chip mount-side on the heat transfer plate is exposed,

an encapsulation part in which the LED chip is encapsulated on the one side of the wiring board, and

a dome-shaped color-changing member formed with an optically transparent material and a fluorescent material excited by light emitted from the LED chip and emitting light of a color different from a color of the light emitted from the LED chip, and placed to surround the encapsulation part on the one side of the wiring board;

a metal fixture body on which the LED chip-containing light-emitting device is held; and

an insulating layer having electrical insulating properties and being interposed between the heat transfer plate and the fixture body to thermally couple the same, wherein

the light-emitting device is bonded to the fixture body with the insulating layer interposed therebetween,

a surface area of the sub-mount member is larger than a surface area of the LED chip, and

a rim of the sub-mount member is placed outside the boundary of a truncated cone shape having an upper base formed by a circular perimeter of a sub-mount member-facing surface of the LED chip and a lower base formed by a circular perimeter of a bottom surface of the heat transfer plate.

2. The LED lighting fixture according to claim **1**, wherein the sub-mount member reduces a stress applied to the LED chip due to a difference in coefficient of linear expansion between the LED chip and the heat transfer plate.

3. The LED lighting fixture according to claim **1**, wherein the truncated cone shape has a generatrix that makes an angle of 45° with the lower base.

4. The lighting fixture according to claim **1**, wherein the insulating layer is formed with a resin sheet that contains a filler and is reduced in viscosity when heated.

5. The LED lighting fixture according to claim **1**, wherein the insulating layer is set to have a two-dimensional size larger than that of the heat transfer plate.

6. The LED lighting fixture according to claim **1**, wherein the color-changing member is placed such that an air layer is formed inside the color-changing member.

* * * * *