US006331891B1

(12) **United States Patent**
Nakamura et al.

(10) **Patent No.: US 6,331,891 B1**
(45) **Date of Patent: Dec. 18, 2001**

(54) **APPARATUS AND METHOD FOR ASSEMBLING SEMICONDUCTOR DEVICE AND SEMICONDUCTOR DEVICE THUS FABRICATED**

(75) Inventors: **Yutaka Nakamura**; **Tetsuo Koezuka**; **Hitoshi Komoriya**; **Takao Hirahara**, all of Kawasaki (JP)

(73) Assignee: **Fujitsu Limited**, Kawasaki (JP)

(*) Notice: Subject to any disclaimer, the term of this patent is extended or adjusted under 35 U.S.C. 154(b) by 0 days.

(21) Appl. No.: **09/285,675**

(22) Filed: **Apr. 5, 1999**

Related U.S. Application Data

(63) Continuation-in-part of application No. 09/161,487, filed on Sep. 28, 1998, now abandoned.

(30) **Foreign Application Priority Data**

Apr. 7, 1998 (JP) 10-94951

(51) **Int. Cl.**[7] **G01B 11/00**
(52) **U.S. Cl.** **356/401**; 356/400
(58) **Field of Search** 356/399–401; 200/548; 438/14, 16

(56) **References Cited**

U.S. PATENT DOCUMENTS

3,903,363 * 9/1975 Monotone et al. 356/399
4,840,876 * 6/1989 Arai 430/328
5,539,752 * 7/1996 Berezin et al. 364/490
5,550,634 * 8/1996 Nakamura 356/401
6,133,986 * 10/2000 Johnson 355/67

* cited by examiner

Primary Examiner—F L Evans
Assistant Examiner—Zandra Smith
(74) *Attorney, Agent, or Firm*—Armstrong, Westerman, Hattori, McLeland & Naughton, LLP

(57) **ABSTRACT**

An apparatus for assembling a semiconductor device including a stage having a substrate support surface for supporting a substrate, and a support member for carrying a semiconductor element to a position on or near the substrate supported by the stage. A microscope unit having a coaxial illuminating unit is arranged inclined to the substrate support surface of the stage, and a counter illuminating unit is arranged inclined on the opposite side from the microscope unit with respect to a normal to the substrate support surface of the stage. A camera is arranged at an image forming position of the microscope unit **1** and an image processing unit is connected to the camera. The substrate has a positioning mark, and the camera acquires an image of the positioning mark and an image of a reflection of the positioning mark reflected by the side surface of the semiconductor element.

9 Claims, 13 Drawing Sheets

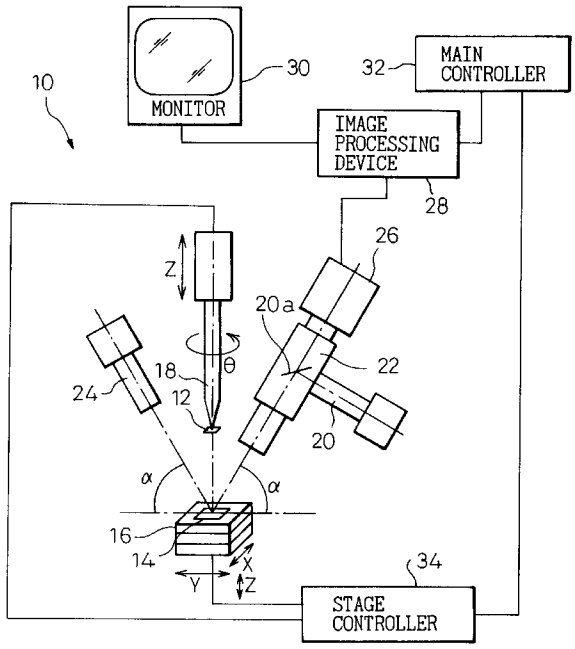

Fig.1

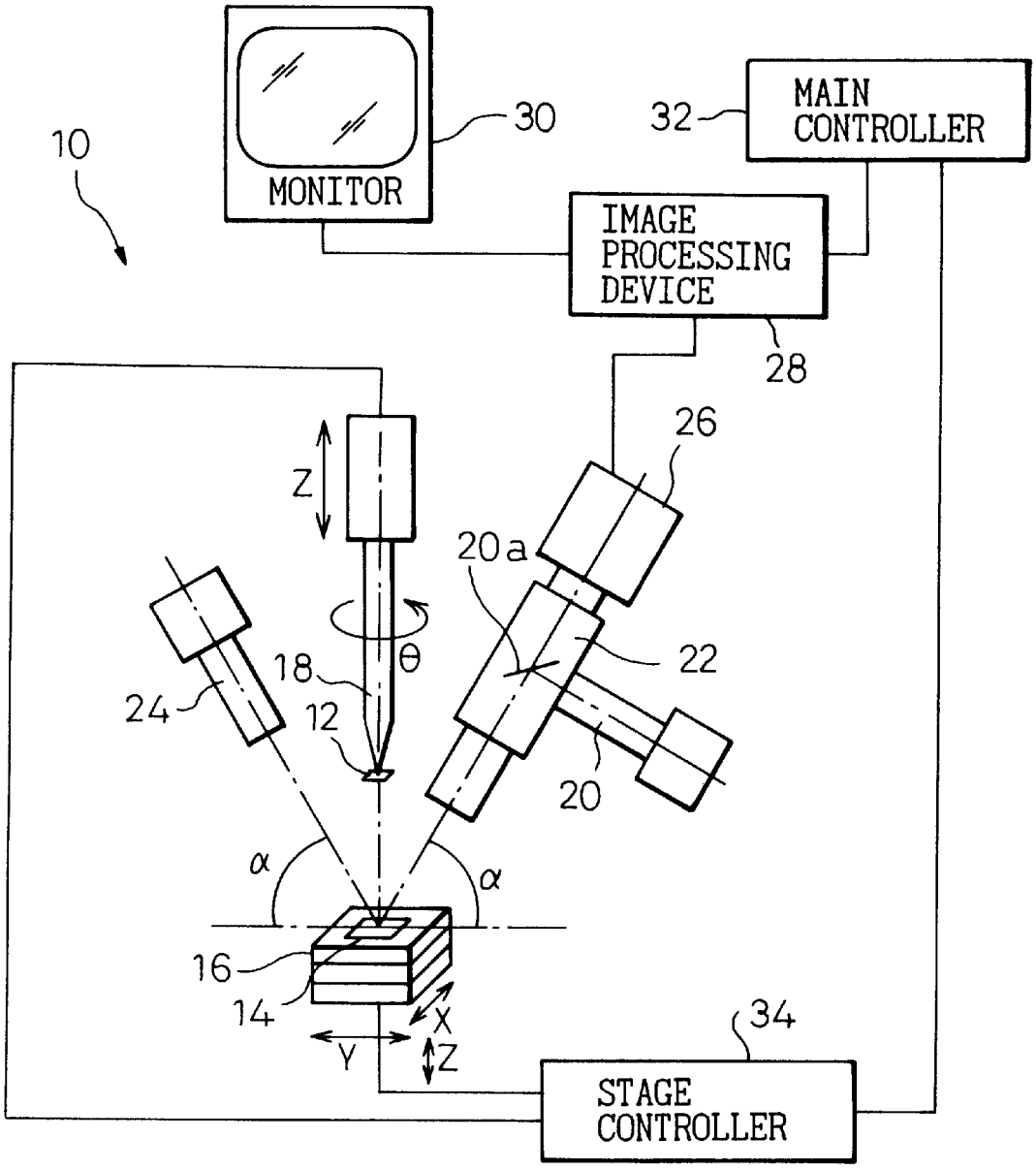
10
MONITOR
30
32
MAIN CONTROLLER
IMAGE PROCESSING DEVICE
28
26
Z
20a
22
θ
18
24
12
20
α
α
16
14
X
Y
Z
34
STAGE CONTROLLER

Fig. 2

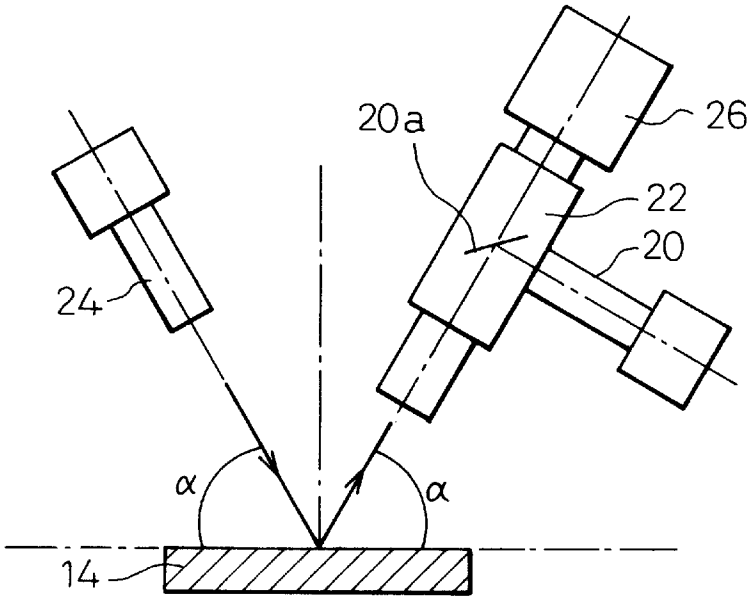

Fig. 3

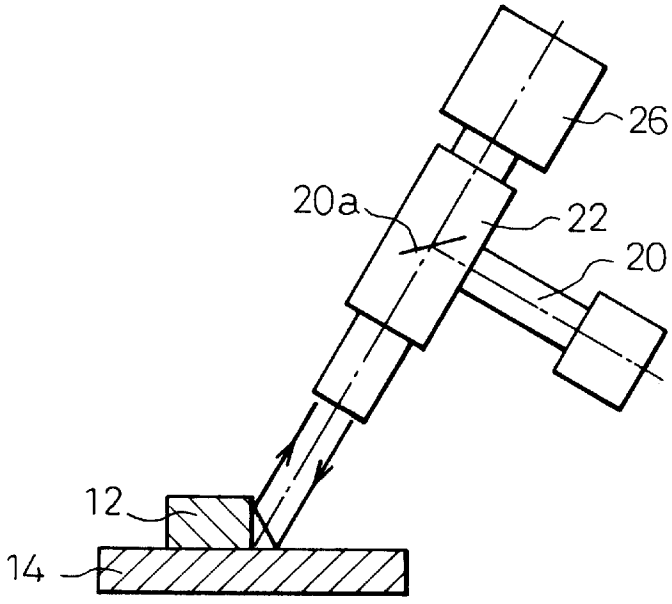

Fig. 4

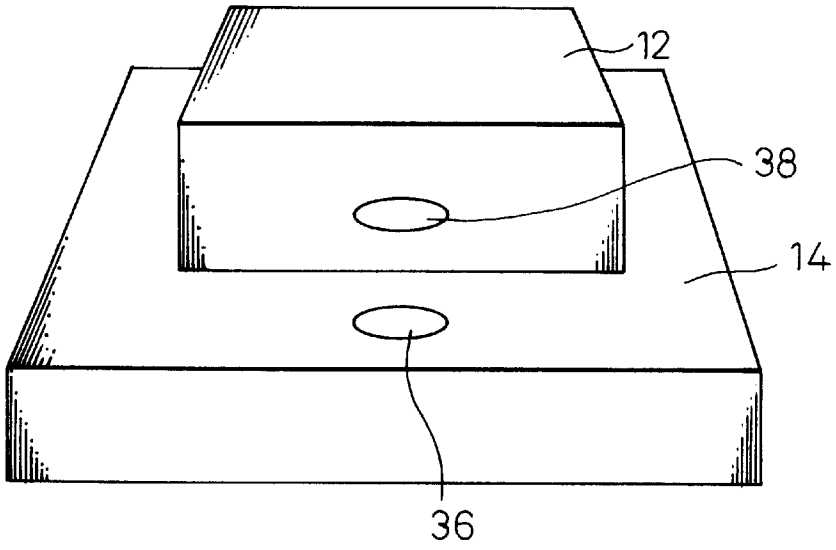

Fig. 5

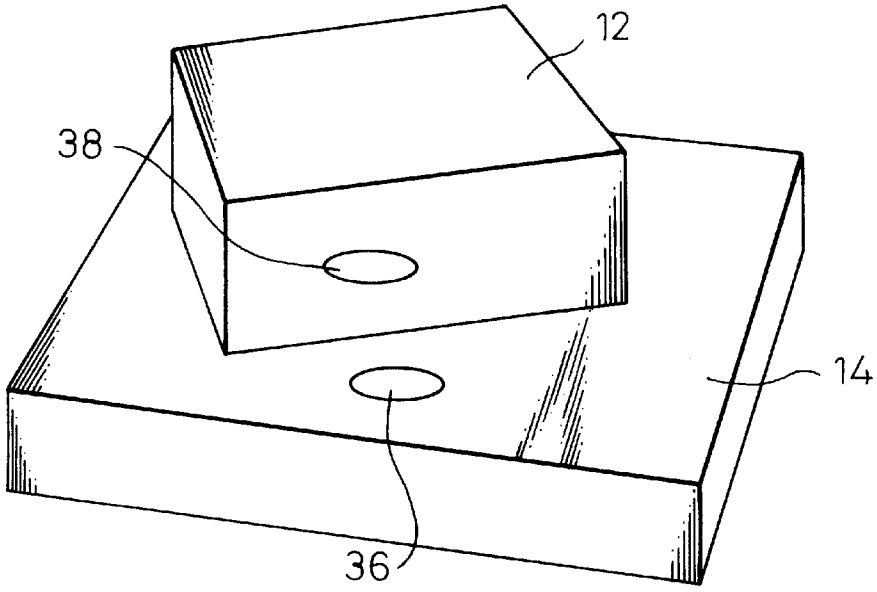

Fig. 6

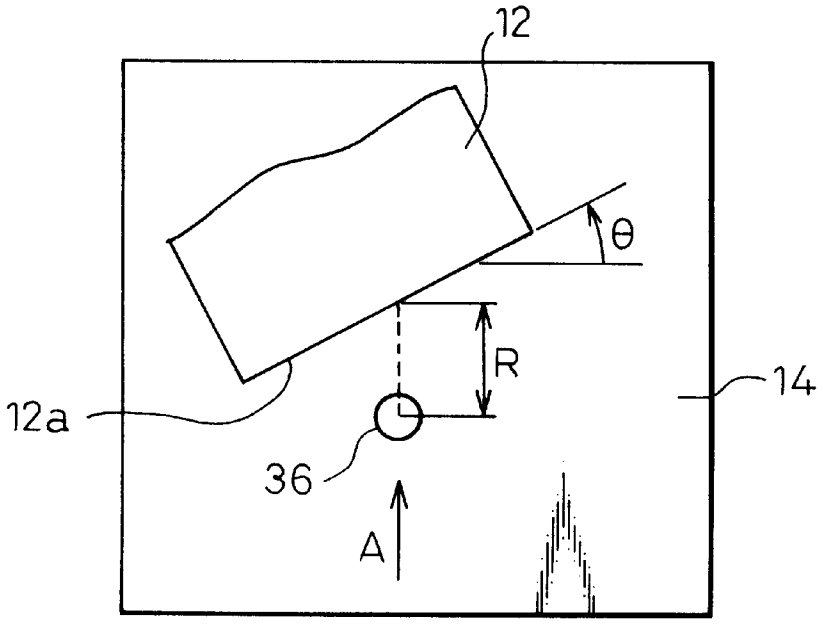

Fig. 7

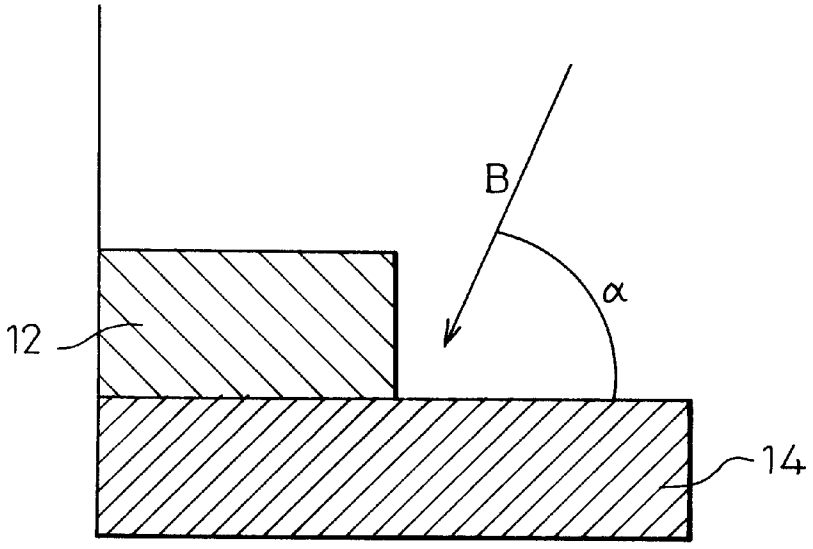

Fig. 8

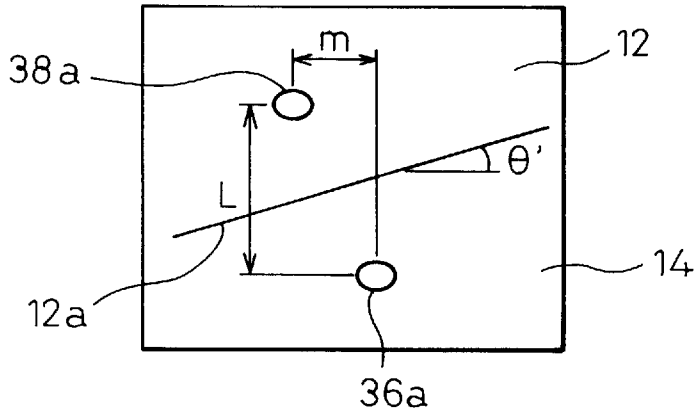

Fig. 9

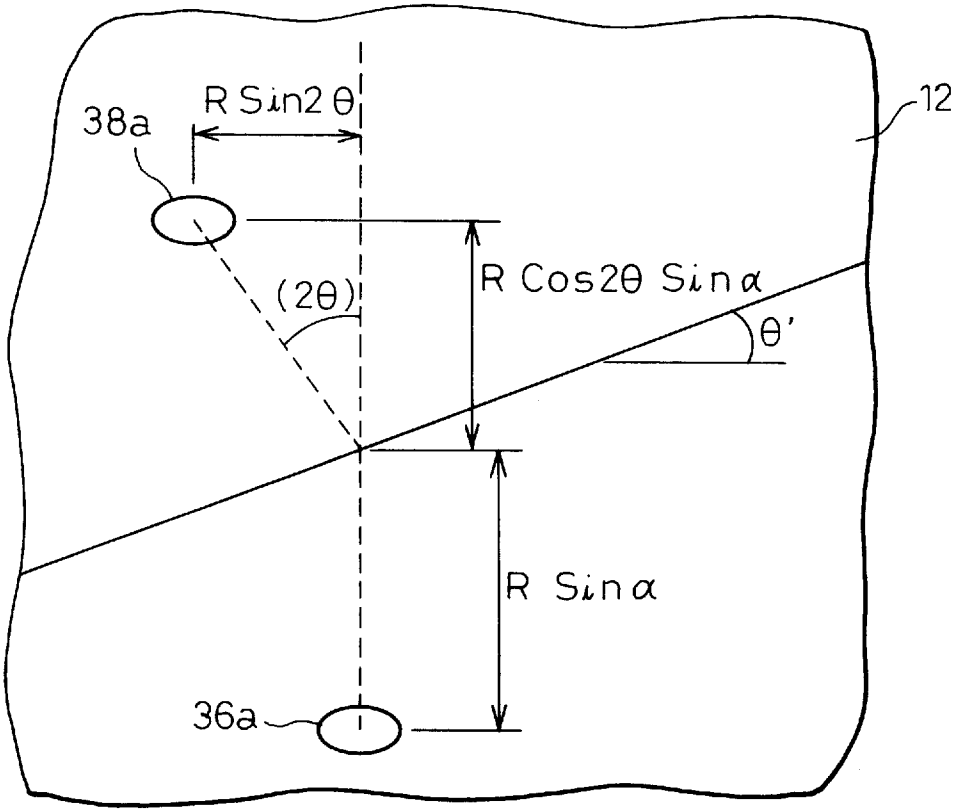

Fig. 10

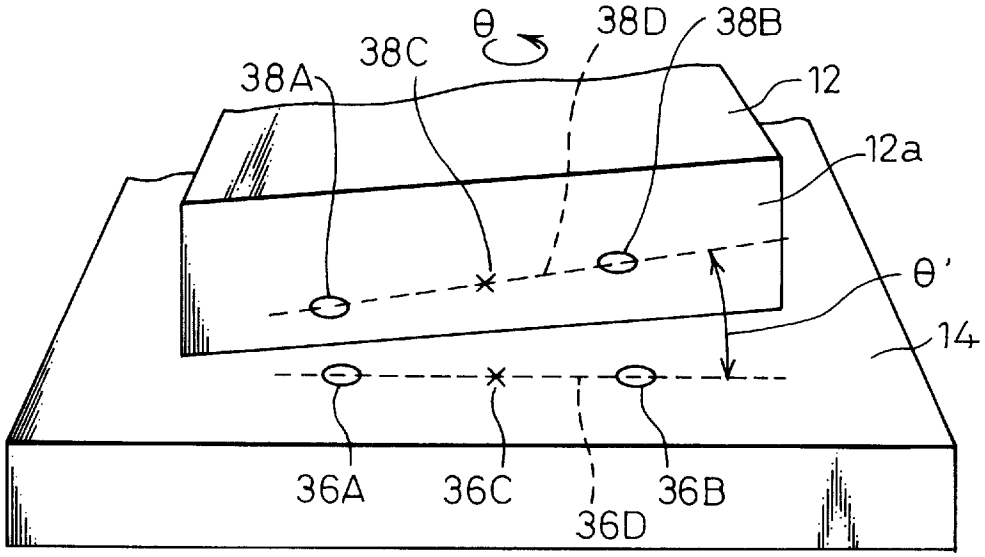
θ
38D
38B
38C
38A
12
12a
θ'
14
36A
36C
36B
36D

Fig. 11

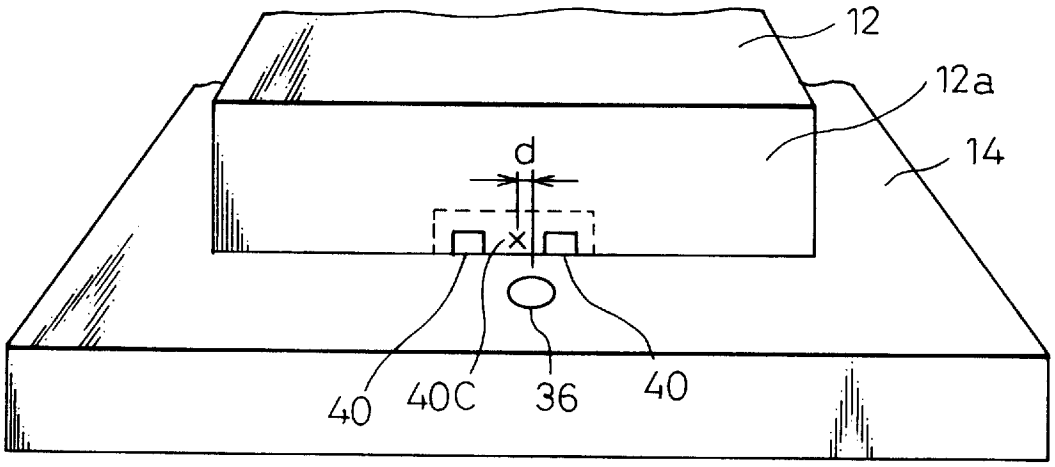
12
12a
14
d
40
40C
36
40

Fig.12

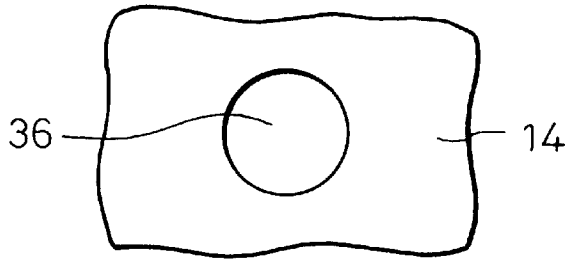

Fig.13

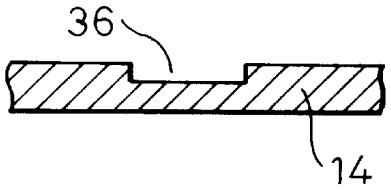

Fig.14

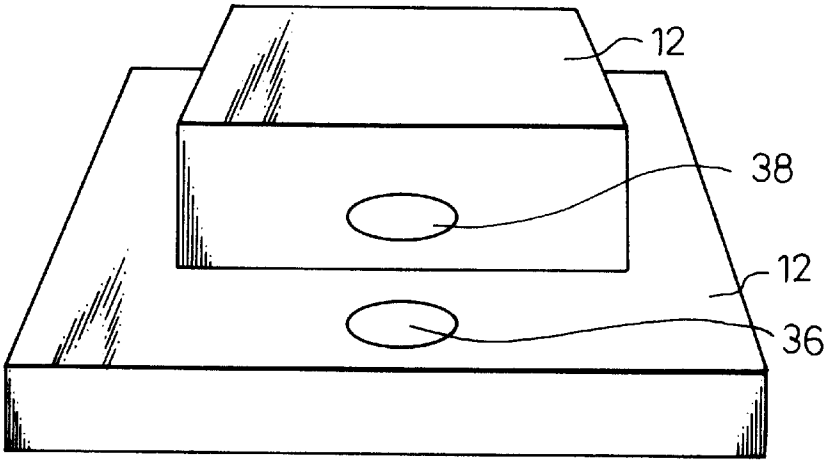

Fig.15A

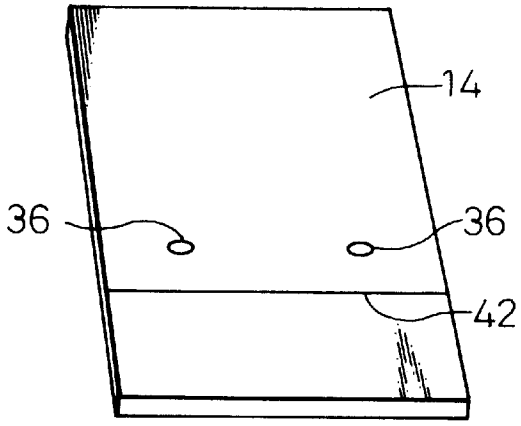

Fig.15B

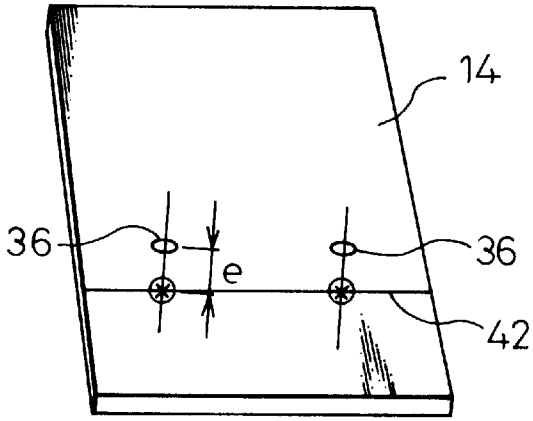

Fig.15C

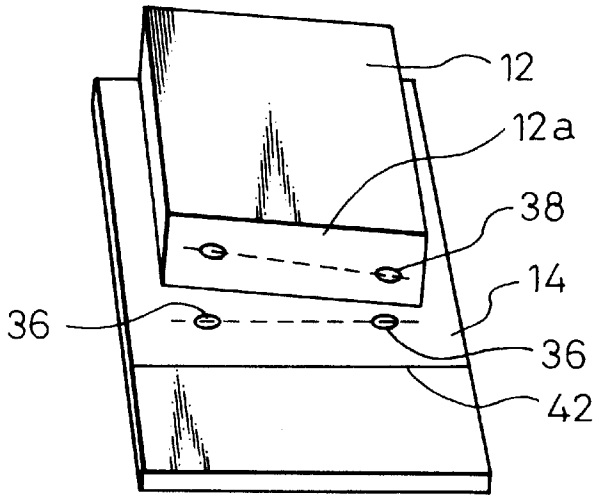

Fig.16A

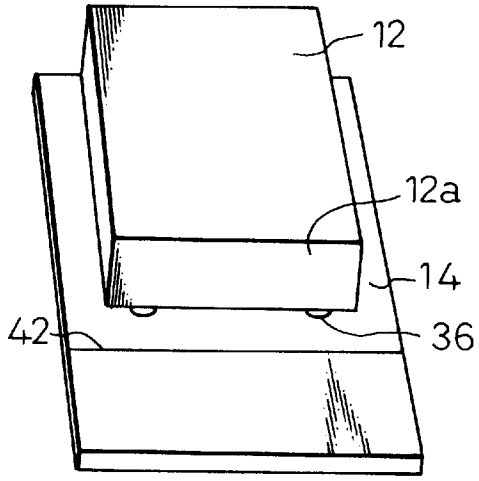

Fig.16B

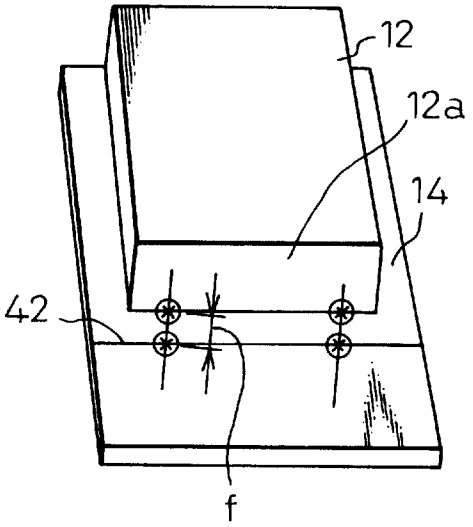

Fig.16C

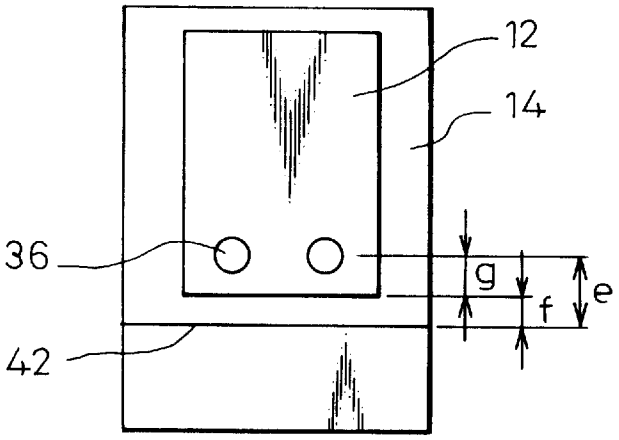

Fig. 17

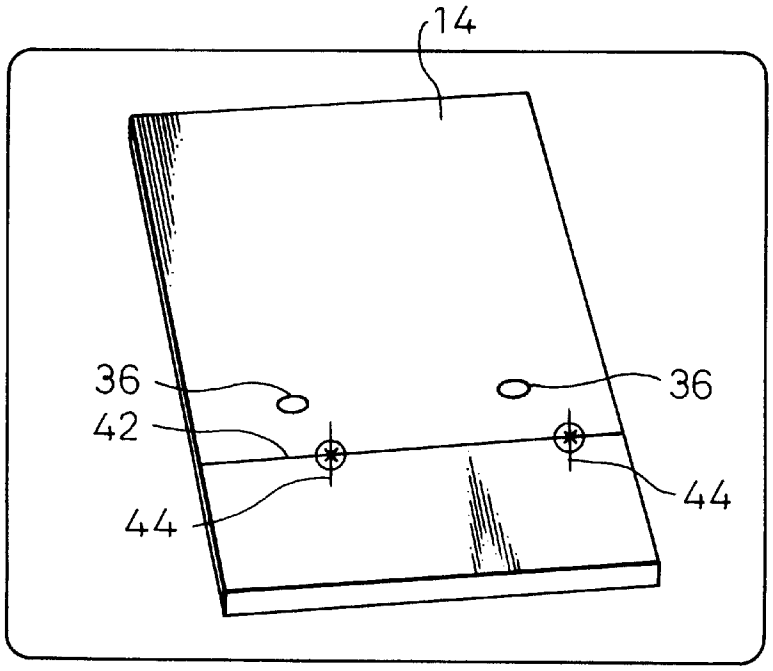

Fig. 18

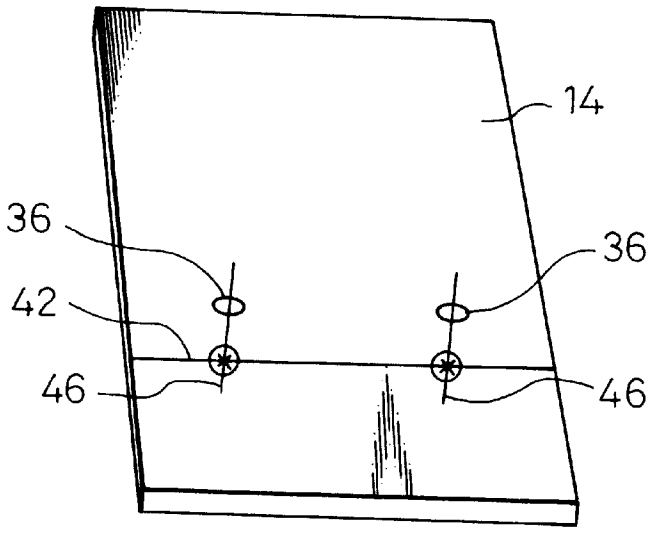

Fig.19

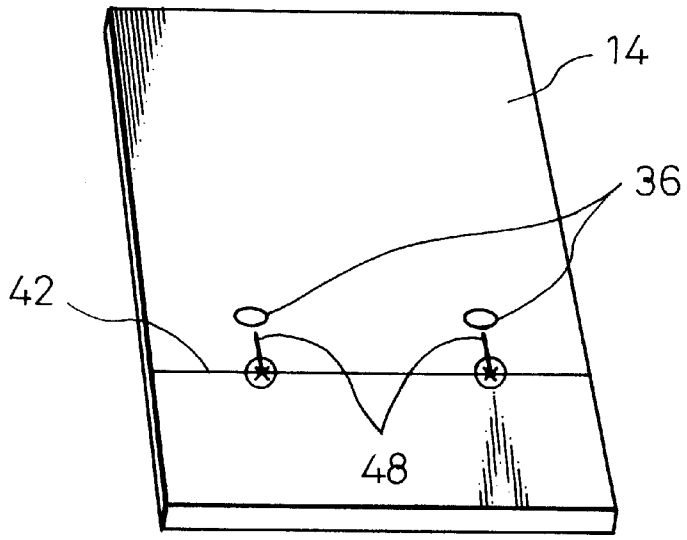

Fig.20

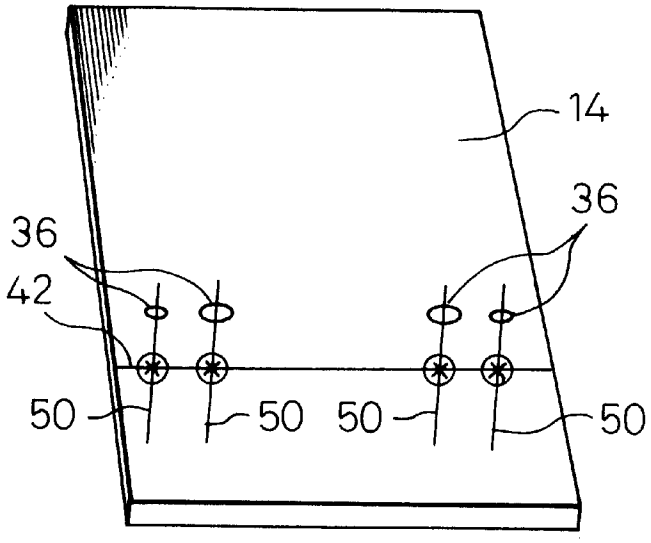

Fig. 21

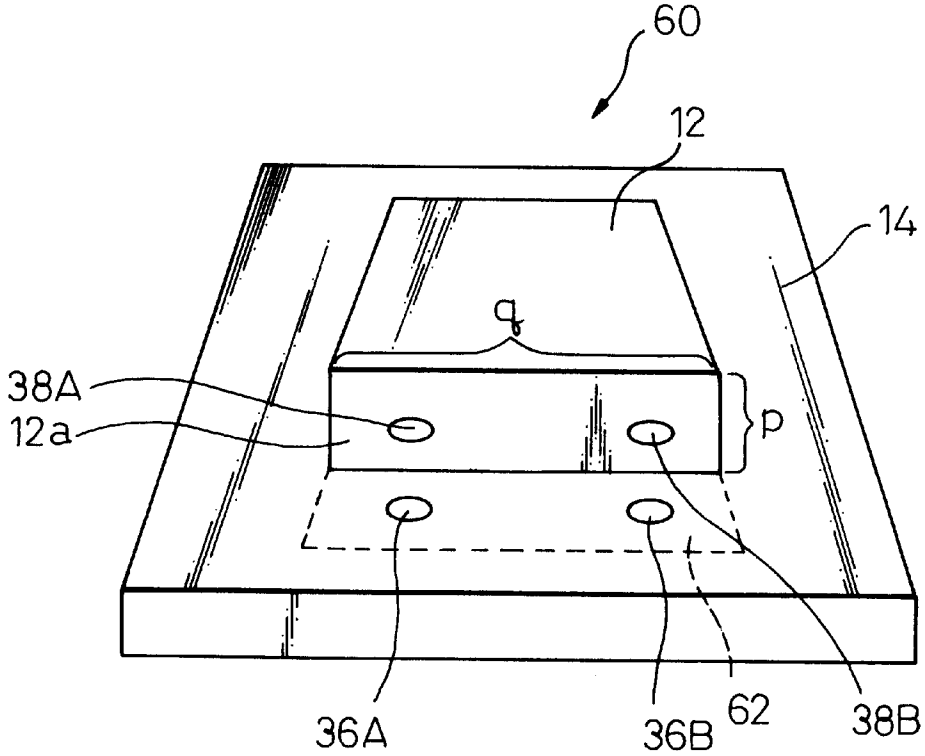

Fig. 22

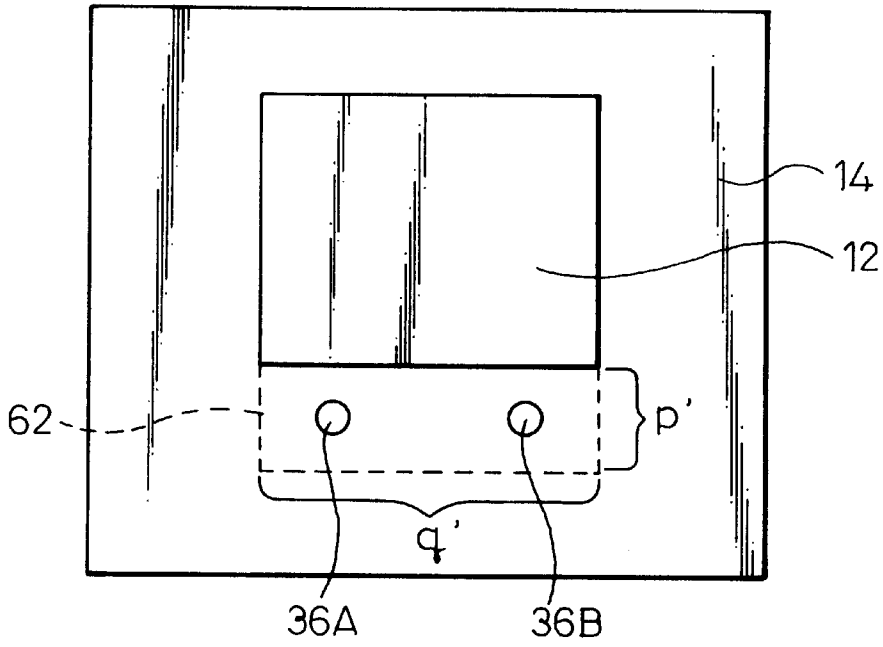

Fig. 23

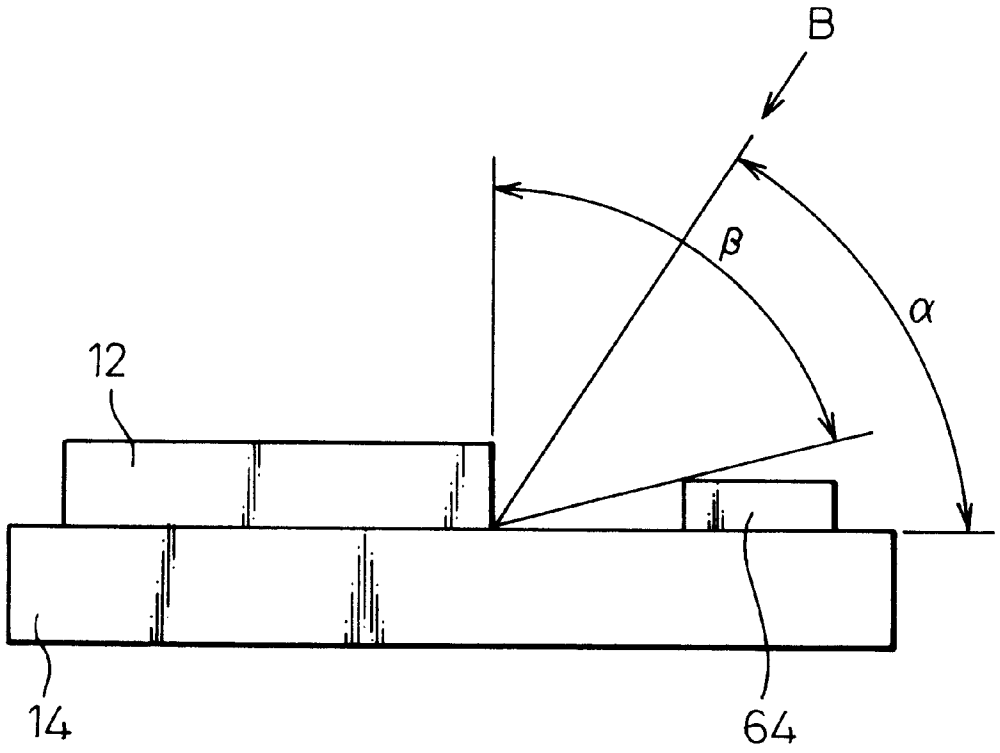

APPARATUS AND METHOD FOR ASSEMBLING SEMICONDUCTOR DEVICE AND SEMICONDUCTOR DEVICE THUS FABRICATED

CROSS REFERENCE TO RELATED APPLICATION

This application is a continuation-in-part application of Ser. No. 09/161,487 now abandoned filed on Sep. 28, 1998.

BACKGROUND OF THE INVENTION

1. Field of the Invention

The present invention relates to an apparatus and method of assembling a semiconductor device and positioning and fixing a semiconductor element to a substrate. The present invention also relates to a semiconductor device fabricated by such a method and apparatus.

2. Description of the Related Art

Many semiconductor devices have been designed in which a semiconductor element such as a photodiode or a laser diode is fixed to a substrate. To obtain such a semiconductor device, it is necessary to position and fix the semiconductor element at a certain position relative to the substrate. In the conventional method of assembling a semiconductor device, positioning marks are provided in the substrate, the semiconductor element is moved onto the substrate, and the semiconductor element is positioned relative to the substrate by moving semiconductor element in such a manner that the bottom of a side of the semiconductor element is overlaid on the positioning marks.

Such a conventional method, however, has the drawback that, when the semiconductor element comes near to a target position, the positioning marks are hidden by the semiconductor element and cannot be seen, so it is difficult to achieve the positioning of the semiconductor element with good accuracy in a short time. If the positioning mark is displaced to a position in front of the target position of the semiconductor element, the positioning mark can be easily seen but the positioning of the semiconductor element cannot be accurately attained.

Moreover, the bottom surface of the semiconductor element is not always in intimate contact with the surface of the substrate, and it is necessary to perform the positioning of the semiconductor element in a state where there is a gap between the bottom surface of the semiconductor element and the surface of the substrate. Thus, when the positioning of the semiconductor element is performed while observing the semiconductor element and the substrate, both the bottom surface of the semiconductor element and the surface of the substrate are not in focus, so it is difficult to position the semiconductor element by simultaneously observing both the substrate and the semiconductor element. Furthermore, it is difficult to quickly move the semiconductor element to a target position, so it is not possible to automatically position the semiconductor elements.

SUMMARY OF THE INVENTION

The object of the present invention is to provide an apparatus and method, for assembling a semiconductor device, by which a semiconductor element can be reliably and quickly positioned relative to a substrate.

An apparatus for assembling a semiconductor device, according to the present invention, comprises: a stage having a substrate support surface for supporting a substrate; a support member for carrying a semiconductor element to a

position on or near the substrate supported by the stage; a microscope unit arranged inclined to the substrate support surface of the stage and having a coaxial illuminating unit; a counter illuminating unit arranged on the opposite side from the microscope unit with respect to a normal to the substrate support surface of the stage and inclined to the substrate support surface thereof; a camera arranged at an image forming position of the microscope unit; and an image processing unit connected to the camera.

With this constitution, it is possible to acquire an image of a positioning mark provided on the substrate and an image of a reflection of the positioning mark reflected by a side surface of a semiconductor element, to calculate the positional relationship between the semiconductor element and the substrate, and to accurately and quickly position the semiconductor element relative to the substrate.

Preferably, the stage has a heater, so that the semiconductor element can be soldered to the substrate.

Preferably, the substrate has at least one positioning mark. Further, the camera is adapted to acquire an image of at least one positioning mark and an image of a reflection of at least one positioning mark reflected by a side surface of the semiconductor element, to thereby obtain the positional relationship between the image of at least one positioning mark and the image of the reflection of at least one positioning mark. The positioning of the semiconductor element onto the substrate is performed according to the positional relationship obtained in this manner.

Preferably, the apparatus for assembling a semiconductor element further comprises: calculating means for calculating a positional relationship between the substrate and the semiconductor element from the positional relationship between the image of at least one positioning mark and the image of the reflection thereof; and moving means for moving at least one of the stage and the support member according to the calculating means.

Preferably, at least one positioning mark has a circular shape. Alternatively, at least one positioning mark has a specific shape formed in the substrate. Alternatively, at least one positioning mark is formed from a material which is different in reflectance from a material of the aforesaid substrate.

Preferably, the at least one positioning mark comprises two positioning marks. Further, the substrate has a linear structure which is different from the at least one positioning mark.

Moreover, a method for assembling a semiconductor element, according to the present invention, comprises the steps of: acquiring an image of at least one positioning mark formed on a substrate, which is supported on a stage, and an image of a reflection of at least one positioning mark reflected by a side surface of the semiconductor element arranged on or near the substrate; obtaining a positional relationship between the image of at least one positioning mark and the image of the reflection of at least one positioning mark; and positioning the semiconductor element relative to the substrate according to the positional relationship therebetween.

In this case too, the positioning of a semiconductor element relative to a substrate can be accurately and quickly achieved by obtaining an image of a positioning mark provided on the substrate and an image of a reflection of the positioning mark reflected by a side surface of a semiconductor element, and then calculating the positional relationship between the semiconductor element and the substrate.

Preferably, the step of acquiring the image of at least one positioning mark formed on the substrate comprises acquir-

ing the image by a camera through a microscope unit, while slantingly irradiating the substrate with illuminating light from a counter illuminating unit arranged inclined to the substrate support surface of the stage, the microscope unit being arranged on the opposite side of the counter illuminating unit with respect to a normal to the substrate support surface of the stage and inclined to a substrate support surface of the stage.

Preferably, the step of acquiring an image of at least one positioning mark and an image of the reflection of at least one positioning mark reflected by a side surface of the semiconductor element, comprises a step of acquiring the images by a camera through a microscope unit, while slantingly irradiating the substrate with illuminating light from a coaxial illuminating unit provided in the microscope unit.

Preferably, the method further comprises the step of calculating a positional relationship between the substrate and the semiconductor element from the positional relationship between the image of at least one positioning mark and the image of the reflection of at least one positioning mark, and moving at least one of the stage and the support member supporting the semiconductor element, according the result of the calculation. Preferably, the method further comprises the step of computing a distance between the substrate and the semiconductor element and an angle of rotation of the semiconductor element with respect to the substrate from at least one positioning mark and the reflection image.

Preferably, the step of acquiring the image of at least one positioning mark and the image of the reflection thereof comprises the steps of: acquiring the images of two positioning marks and the images of reflections thereof; and calculating a distance between the substrate and the semiconductor element, an angle of rotation of the substrate, and an angle of rotation of the semiconductor element with respect to the substrate, which is based on an angle between a straight line, which passes through the two positioning marks formed on the substrate, and a straight line, which passes through reflections of the two positioning marks, from the two positioning marks and reflections thereof. Preferably, the method further comprises the steps of: adjusting a position of the semiconductor element in a direction parallel to a side thereof according to at least one mark provided on the semiconductor element and to a position of at least the one positioning mark provided thereon.

Preferably, the substrate has a linear structure, which is different from the one positioning mark, and a position of the semiconductor element is adjusted by preliminarily checking a positional relationship between the one positioning mark and the linear structure and then adjusting the position of the semiconductor element according to the positional relationship therebetween when at least one positioning mark is hidden by the semiconductor element when the semiconductor element is placed at a target position.

The present invention also provides a semiconductor device comprising a substrate having a surface; a semiconductor element mounted to the surface of the substrate, the semiconductor element having a side surface; and the substrate having at least one positioning mark in a mark setting area contiguous to the side surface of the semiconductor element, whereby the at least one positioning mark and an image of a reflection of the at least one positioning mark reflected by the side surface of the semiconductor element can be observed.

The semiconductor device can be conveniently fabricated by the above described method and apparatus. The semiconductor device includes an optical semiconductor device in which the semiconductor element comprises a semiconductor chip such as a photo diode or a laser diode, for example.

Preferably, the at least one positioning mark is arranged in such a relationship with the semiconductor element that the at least one positioning mark does not overlap the semiconductor element and is away from the side surface of the semiconductor element.

Preferably, the at least one positioning mark has a circular shape. Alternatively, the at least one positioning mark has a specific shape formed on the substrate, or the at least one positioning mark is formed from a material which is different in reflectance from a material of the substrate.

Preferably, the at least one positioning mark comprises two positioning marks. In this case, the two positioning marks are preferably circular positioning marks located on a line substantially parallel to the side surface of the semiconductor element mounted to the substrate.

BRIEF DESCRIPTION OF THE DRAWINGS

The present invention will become more apparent from the following description of the preferred embodiments, with reference to the accompanying drawings, in which:

FIG. **1** is a view illustrating an apparatus of assembling a semiconductor device according to the first embodiment of the present invention;

FIG. **2** is a view illustrating the case where the counter illuminating unit is used when no semiconductor element is present on the substrate;

FIG. **3** is a view illustrating a case where the coaxial illuminating unit is used when a semiconductor element is present on the substrate;

FIG. **4** is a view illustrating an example of the substrate provided with a positioning mark;

FIG. **5** is a view illustrating an example of a case where the semiconductor element is placed on the substrate inclined to a side of the substrate;

FIG. **6** is a plan view of the substrate and the semiconductor element;

FIG. **7** is a side view, in cross-section, of the substrate and the semiconductor element;

FIG. **8** is a view illustrating an image of the positioning mark and an image of a reflection thereof, which are obtained by the image processing unit,

FIG. **9** is an enlarged view of a part of FIG. **8**;

FIG. **10** is a view illustrating an example of a case where two positioning marks are arranged on the substrate;

FIG. **11** is a view illustrating an example of a case where two marks respectively constituted by concave parts are provided in a side portion of the substrate;

FIG. **12** is a plan view showing the shape of the positioning mark arranged on the substrate;

FIG. **13** is a cross-sectional view illustrating the shape of the positioning mark arranged on the substrate;

FIG. **14** is a perspective view illustrating another shape of the positioning mark arranged on the substrate;

FIGS. **15**A to **15**C are views illustrating a method of fabricating a semiconductor device according to the second embodiment of the present invention;

FIGS. **16**A to **16**C are views illustrating the steps following the steps of FIG. **15**C;

FIG. **17** is a view illustrating an example of a method of recognizing the position of a linear structure;

FIG. **18** is a view illustrating another example of the method of recognizing the position of a linear structure;

FIG. **19** is a view illustrating still another example of the method of recognizing the position of a linear structure;

FIG. **20** is a view illustrating yet another example of the method of recognizing the position of a linear structure;

FIG. **21** is a perspective view of a semiconductor device fabricated by a method and an apparatus according to the present invention;

FIG. **22** is a plan view of the semiconductor device of FIG. **21**; and

FIG. **23** is a side view of the semiconductor device.

DESCRIPTION OF THE PREFERRED EMBODIMENTS

FIG. **1** shows an apparatus of assembling a semiconductor device according to the present invention. The apparatus **10** is operative to form a semiconductor device by attaching a semiconductor element **12** to a substrate **14**. The semiconductor element **12** is a semiconductor chip such as a photodiode or a laser diode, for example, and the substrate **14** is a silicon substrate, for instance.

The apparatus **10** is provided with a stage **16** onto which the substrate **14** is placed, and a support member **18** for carrying the semiconductor element **12** onto the substrate **14** supported by the stage **16**. The stage **16** is adapted to move in the X, Y and Z axes and has a heater (not shown) therein, so that the semiconductor element **12** can be soldered to the substrate **14** by inserting solder between the semiconductor element **12** and the substrate **14**. The support member **18** comprises an arm **19** and is movable in the direction of the Z-axis and rotatable in the direction of an angle θ around the Z-axis. Further, the support member **18** has an attracting means, which is operative to attract the semiconductor element **12**, at the tip end portion thereof.

The apparatus **10** is further provided with a microscope unit **22** having a coaxial illuminating unit **20**, a counter illuminating unit **24**, a CCD camera **26** placed at an image forming position of the microscope unit **22**, and an image processing unit **28** connected to the CCD camera **26**. Moreover, a monitor **30**, a main controller **32** and a stage controller **34** are provided in the fabrication apparatus **10**. The main controller **32** is operative to control the entire apparatus. The stage controller **34** controls the movement of the stage **16** and the support member **18**.

The microscope unit **22** having the coaxial illuminating unit **20** is arranged inclined to the substrate support surface of the stage **16**, and the counter illuminating unit **24** is arranged inclined on the opposite side of the microscope unit **22** with respect to a normal N to the substrate support surface of the stage **16** and inclined to the substrate support surface thereof. The microscope unit **22** is arranged at an angle α of elevation to the substrate support surface of the stage **16**. The counter illuminating unit **24** is arranged on the side opposite to the microscope unit **22** and at an angle α of elevation to the substrate support surface of the stage **16**. The coaxial illuminating unit **20** contains a semitransparent mirror **20***a* placed in the barrel of the microscope unit **22**.

FIG. **2** illustrates a case where the counter illuminating unit **24** is used when the semiconductor element **12** is not present on the substrate **14**. Illuminating light emitted from the counter illuminating unit **24** is regularly reflected by the surface of the substrate **14** of the stage **16** and is then made incident to the microscope unit **22**. The illuminating light then passes through the semitransparent mirror **20***a* and travels toward the CCD camera **26**. Image obtained by the CCD camera **26** is processed by the image processing unit **28**.

FIG. **3** illustrates a case that the coaxial illuminating unit **20** is used when the semiconductor element **12** is present on the substrate **14**. Illuminating light emitted from the coaxial illuminating unit **20** is reflected by the semitransparent mirror **20***a* and then travels in the barrel of the microscope unit **22** toward the substrate **14** supported by the stage **16**. The illuminating light is reflected by the surface of the substrate **14** supported by the stage **16** and by a side surface of the semiconductor element **12** and is made incident to the microscope unit **22**. The light passes through the semitransparent mirror **20***a* and then goes to the CCD camera **26**. The image obtained by the CCD camera **26** is processed by the image processing unit **28**.

FIG. **4** illustrates an example of the substrate **14** having a positioning mark **36**. When the substrate **14** and the semiconductor element **12** are viewed in a slanting direction, the positioning mark **36** and a reflection (image) **38** of the positioning mark **36**, which is reflected by a side surface of the semiconductor element **12**, are observed. Namely, the reflection **38** of the positioning mark **36** is formed on the side surface of the semiconductor element **12** since the cleavage plane of the crystal of the semiconductor element **12** acts as a mirror. FIG. **5** illustrates a case where the semiconductor element **12** is placed on the substrate **14** in such a way as to be inclined at an angle to the substrate **14**.

In a fabricating operation, the substrate **14** is put on the stage **16** and then the positioning of the substrate **14** thereon is performed. In this case, the positioning of the substrate **14** is performed while the semiconductor element **12** is not present on or near the substrate **14** as illustrated in FIG. **2**, by observing the surface of the substrate **14** by the microscope unit **22**, using the counter illuminating unit **24**, and obtaining the image of the positioning mark **36** on the substrate **14**, using the CCD camera **26**.

The support member **18** is then operated to move the semiconductor element **12** onto the substrate **14**. The coaxial illuminating unit **20** is used this time, as illustrated in FIG. **3**. The positioning mark on the surface of the substrate **14** and the reflection **38** of the positioning mark **36** on the side surface of the semiconductor element **12** are observed by the microscope unit **22** and an image **36***a* (see FIG. **8**) of the positioning mark **36** and an image **38***a* (see FIG. **8**) of the reflection **38** are obtained by the CCD camera **26**.

FIG. **6** is a plan view of the substrate **14** and the semiconductor element **12**. FIG. **7** is a side cross-sectional view of the substrate **14** and the semiconductor element **12**. Incidentally, the direction A indicates a direction in which the substrate **14** is seen from the front thereof. In this case, it is assumed that the angle θ is formed between the substrate **14** and the side surface **12***a* of the semiconductor **12** and that the distance in the direction A between the positioning mark **36** and the side surface **12***a* of the semiconductor element **12** is R.

FIGS. **8** and **9** are views of the substrate **14** and the semiconductor element **12** that are seen from an upwardly slanting direction. Namely, FIGS. **8** and **9** show the image **36***a* of the positioning mark **36** and the image **38***a* of the reflection **38**, which are obtained by the image processing unit **28** (and thus displayed on the screen of the monitor **30**) in the case where the microscope unit **22** is placed in the direction A of FIG. **6** and in the direction of FIG. **7**. The distance "m" between the image **36***a* of the positioning mark **36** and the image **38***a* of the reflection **38** in the direction of

the X-axis and the distance "L" therebetween in the direction of the Y-axis can be obtained directly from these images displayed on the screen. Further, the angle θ' formed between the substrate **14** and the side surface **12***a* of the semiconductor element **12** can be also obtained directly from the image displayed on the screen. There are the following relationship among the distances "m" and "L" and the angle θ', which are illustrated in FIGS. **8** and **9**, and the distance "R" and the angle θ that are illustrated in FIG. **6**.

$$m=R\sin 2\theta \quad (1)$$

$$L=R(1+\cos 2\theta)\sin\alpha \quad (2)$$

$$\theta'=\text{arc Tan}(\sin\theta\sin\alpha/\cos\theta) \quad (3)$$

These equations are solved for R and θ as follows:

$$R=(L+m^2\sin^2\alpha/L)(2\sin\alpha) \quad (4)$$

$$\theta=\text{arc Tan}(m\sin\alpha/L) \quad (5)$$

These relationships are stored in the main controller **32**. Thus, R and θ can be immediately obtained by obtaining m, L and θ' by image processing. Therefore, it is possible to position the semiconductor element **12** as desired by moving or adjusting the semiconductor element **12** in the direction A of FIG. **6** by a predetermined distance with respect to the substrate **14** and by turning it by an angle θ. Incidentally, the aforementioned calculation is an example of the positioning of the semiconductor element in the XY-plane to be performed when the semiconductor element **12** is in contact with the substrate **14**.

In the case where it is necessary to perform the positioning of the semiconductor element **12** in the direction perpendicular to the direction A, suitable marks should be provided on the side surface **12***a* of the semiconductor element **12**. For instance, FIG. **11** shows an example in which two marks **40** respectively constituted by concave portions are provided in the side surface (portion) **12***a* of the semiconductor element **12**. The positioning of the semiconductor element **12** in the direction perpendicular to the direction A can be achieved by obtaining the distance "d" from the midpoint **40***c* between the two marks **40** to the positioning mark **36**. Further, the positioning of the semiconductor element **12** in the XY-plane can be performed with the semiconductor element **12** placed above the substrate **14** at a slight gap between the semiconductor element **12** and the substrate **14**.

Upon completion of the positioning of the semiconductor element **12** relative to the substrate **14**, the heater provided in the stage **16** is operated to solder the semiconductor element **12** to the substrate **14**. The solder may be preliminarily provided on the surface of the substrate **14**, or alternatively, the solder may be filled into a space between the semiconductor element **12** and the substrate **14**.

FIG. **10** shows an example in which two positioning marks **38**A and **38**B are provided on the substrate **14**. The reflection images **38**A and **38**B of the two positioning marks **36**A and **36**B are formed or seen in the side surface **12***a* of the semiconductor element **12**. In this example, the midpoint **36**C between the positioning marks **36**A and **36**B, the straight line **36**D passing through the positioning marks **36**A and **36**B, the midpoint **38**C between the reflection images **38**A and **38**B, the straight line **38**D passing through the reflection images **38**A and **38**B can be obtained. The angle θ' of rotation can be obtained from the relationship between the straight lines **36**D and **38**D. The distance between the semiconductor element **12** and the positioning mark can be obtained from the distance between the midpoints **36**C and **38**C.

It is preferable that the positioning mark **36** formed on the substrate **14** has a circular shape, as shown in FIG. **12**. As a result of making the positioning mark **36** a circle, the observed positioning mark **36** has a same shape, regardless of the angle of rotation of the semiconductor element **12** and the substrate **14**. Thus, the recognition of the positioning mark is facilitated.

It is preferable that the positioning mark **36** of the substrate **14** is formed in the substrate **14** in a specific shape, as illustrated in FIG. **13**. In the example of FIG. **13**, the positioning mark is formed in a circular concave shape. Such a positioning mark can be reliably and easily formed by etching the substrate **14**. Incidentally, the positioning mark can be formed in a convex shape.

FIG. **14** shows another example of the positioning mark **36**. In this case, the positioning mark **36** is formed from a material or shape, which is different in reflectance from a material or shape of the substrate **14**. Namely, the positioning mark **36** is formed from a material or shape, whose reflectance is higher or lower than that of the substrate **14**. Thus, the image of the positioning mark has high contrast, so that the recognition of the positioning mark is facilitated.

FIGS. **15**A to **20** show another embodiment of the present invention. In this embodiment too, the semiconductor manufacturing apparatus of FIG. **1** is used. This embodiment is advantageous in a case where the positioning mark **36** is formed on the substrate **14** at such a position that the mark **36** is hidden by the semiconductor element **12**. The substrate **14** has a linear structure **42** that is different from the circular positioning mark **36**. In this embodiment, the linear structure **42** is formed by utilizing a boundary between surface structures on the substrate **14**.

When fabricating a semiconductor device, the circular positioning marks **36** formed on the substrate **14** are recognized, as illustrated in FIG. **15**A. Moreover, the linear structure **42** provided on the substrate **14** is recognized as illustrated in FIG. **15**B. Then, the distance "e" between the circular positioning mark **36** and the linear structure **42** is obtained. Next, the semiconductor element **12** is put on the substrate **14**, as illustrated in FIG. **15**C. The semiconductor element **12** is temporarily positioned at a position where the circular positioning marks **36** can be seen, according to the relationship between the image of the circular positioning mark **36** and the reflection image thereof, in a similar manner to the foregoing case. At this time, the rotation of the semiconductor element **12** is corrected.

Further, the semiconductor element **12** is moved to a position which is almost a target position, as illustrated in FIG. **16**A. At that time, the circular positioning marks **36** are hidden by the semiconductor element **12**. Subsequently, the distance "f" between the side surface **12***a* of the semiconductor element **12** and the linear structure **42**, as illustrated in FIG. **16**B. Next, the semiconductor element **12** is further moved by a distance g=e−f, as illustrated in FIG. **16**C.

In this fabrication method, even when the circular positioning marks **36** are hidden by the semiconductor element **12**, the positioning or justification of the semiconductor element **12** can be checked by measuring data representing the positional relationship between each circular positioning mark **36** and the linear structure **42** before the circular positioning marks **36** are hidden and by then adjusting the position of the semiconductor element **12** with respect to this linear structure **42**. Further, the recognition of the linear structure **42** is performed for every substrate, so that highly accurate positioning of the semiconductor element can be attained regardless of the shape of the linear structure **42**.

FIGS. **17** through **20** show examples of methods of recognizing the position of the linear structure **42**.

In FIG. **17**, the point of intersection between the linear structure **42** and the straight line **44** fixed on the screen is recognized.

In FIG. **18**, the point of intersection between the linear structure **42** and the straight line **46** passing through the center of the circular positioning mark **36** is recognized.

In FIG. **19**, linear recognizing marks **48** are formed at positions where the linear recognizing marks **48** intersect with the linear structure **42**, respectively. Thus, the point of intersection between the linear structure **42** and the linear recognizing mark **48** is recognized.

In FIG. **20**, a plurality of recognizing marks **50**, which are different in shape and position from one another, are formed. Further, the relative position between the linear structure **42** and each of the marks **50** is recognized. Furthermore, the recognized relative positions are averaged.

FIG. **21** is a perspective view of a semiconductor device **60** fabricated by the above described method and apparatus according to the present invention. FIG. **22** is a plan view of the semiconductor device **60** of FIG. **21**, and FIG. **23** is a side view of the semiconductor device **60**. The semiconductor device **60** comprises a substrate **14** and a semiconductor element **12** mounted to the surface of the substrate. The substrate **14** has at least one positioning mark.

In FIGS. **21** and **22**, the at least one positioning mark comprises two circular positioning marks **36**A and **36**B. This semiconductor device **60** corresponds to the final form of the semiconductor device shown in FIG. **10**. In the final form of the semiconductor device **60**, two circular positioning marks **36**A and **36**B are located on a line substantially parallel to the side surface **12***a* of the semiconductor element **12** mounted on the substrate **14**.

The at least one positioning mark of the semiconductor device **60** can be one positioning mark **36**, as shown in FIGS. **4** to **9**. The at least one positioning mark can be a positioning mark **36** having a specific shape formed on the substrate **14**, as described with reference to FIG. **13**. Also, the at least one positioning mark can be a positioning mark **36** formed from a material which is different in reflectance from a material of the substrate **14**, as described with reference to FIG. **14**.

The at least one positioning mark **36** (**36**A and **36**B) is provided in a mark setting area **62** on the surface of the substrate **14** contiguous to the side surface **12***a* of the semiconductor element **12**. The mark setting area **62** is defined so that the at least one positioning mark **36** (**36**A and **36**B) and an image of a reflection of the at least one positioning mark **36** (**36**A and **36**B) reflected by the side surface **12***a* of the semiconductor element **12** can be simultaneously observed. In this case, the at least one positioning mark **36** (**36**A and **36**B) is arranged in such a relationship with the semiconductor element **12** that the at least one positioning mark **36** (**36**A and **36**B) does not overlap with the semiconductor element **12** and is apart from the side surface **12***a* of the semiconductor element **12**. That is, in the principle of the method of assembling the semiconductor device according to the present invention, the distance "R" between the at least one positioning mark **36** (**36**A and **36**B) and the side surface **12***a* of the semiconductor element **12** is calculated, and positioning of the semiconductor element **12** is carried out based on the calculated distance "R", as described with reference to FIG. **6**.

The mark setting area **62** is defined by the area of $p' \times q'$, where "p" is the height of the side surface **12***a* of the semiconductor element **12**, and "q" is the width of the side surface **12***a* of the semiconductor element **12**. Here, $p'=p/\tan\alpha$, $q'=q$. α is the angle of observation. In FIG. **23**, the arrow B indicates the direction of observation, and the angle of observation α is an angle between the surface of the substrate and the direction of observation B. The angle of observation α can be any angle in the range from zero to 90 degrees. When the substrate **14** includes an uneven surface structure **64**, the direction of observation B is restricted in the angular range β, so that the angle of observation α becomes narrower.

As described above, in accordance with the present invention, the high-precision adjusting and positioning of semiconductor elements onto a substrate can be achieved in a short time. Further, a mark for adjusting is formed on the substrate and there is no necessity for providing a marking area in a small semiconductor element. Consequently, a load imposed on the semiconductor element is light. Moreover, even when the mark is hidden, an adjustment position can be checked. A semiconductor device including a substrate and a semiconductor chip mounted thereto can thus be conveniently obtained.

What is claimed is:

1. An apparatus for assembling a semiconductor device, comprising:

a stage having a substrate support surface for supporting a substrate;

a support member for carrying a semiconductor element to a position on or near the substrate supported by said stage;

a microscope unit arranged inclined to the substrate support surface of said stage and having a coaxal illuminating unit, the microscope unit being inclined so that the microscope unit can observe an end surface or side surface of the semiconductor element rested on the substrate when said coaxial unit is used;

a counter illuminating unit arranged on the opposite side from said microscope unit with respect to a normal to the substrate support surface of said stage and inclined to the substrate support surface thereof;

a camera arranged at an image forming position of said microscope unit; and

an image processing unit connected to said camera.

2. The apparatus for assembling a semiconductor device according to claim **1**, wherein said stage has a heater, so that said semiconductor element can be soldered to said substrate.

3. An apparatus for assembling a semiconductor device, comprising:

a stage having a substrate support surface for supporting a substrate;

a support member for carrying a semiconductor clement to a position on or near the substrate supported by said stage;

a microscope unit arranged inclined to the substrate support surface of said stage and having a coaxal illuminating unit;

a counter illuminating unit arranged on the opposite side from said microscope unit with respect to a normal to the substrate support surface of said stage and inclined to the substrate support surface thereof;

a camera arranged at an image forming position of said microscope unit; and

an image processing unit connected to said camera, wherein said substrate has at least one positioning

mark, wherein said camera is adapted to acquire an image of said at least one positioning mark and an image of a reflection of said at least one positioning mark reflected by a side surface of said semiconductor element, to thereby obtain a positional relationship between the image of said at least one positioning mark and the image of the reflection of said at least one positioning mark, and positioning of said semiconductor element onto said substrate is performed according to the positional relationship therebetween.

4. The apparatus for assembling a semiconductor device according to claim **3**, further comprising:

calculating means for calculating a positional relationship between the substrate and the semiconductor element from the positional relationship between the image of said at least one positioning mark and the image of the reflection thereof; and moving means for moving at least one of said stage and said support member according to said calculating means.

5. The apparatus for assembling a semiconductor device according to claim **3**, wherein said at least one positioning mark has a circular shape.

6. The apparatus for assembling a semiconductor device according to claim **3**, wherein said at least one positioning mark has a specific shape formed on said substrate.

7. The apparatus for assembling a semiconductor device according to claim **3**, wherein said at least one positioning mark is formed from a material which is different in reflectance from a material of said substrate.

8. The apparatus for assembling a semiconductor device according to claim **3**, wherein said at least one positioning mark comprises two positioning marks.

9. The apparatus for assembling a semiconductor device according to claim **3**, wherein said substrate has a linear structure which is different from said at least one positioning mark.

* * * * *

UNITED STATES PATENT AND TRADEMARK OFFICE

CERTIFICATE OF CORRECTION

PATENT NO. : 6,331,891 B1
DATED : December 18, 2001
INVENTOR(S) : Nakamura et al.

It is certified that error appears in the above-identified patent and that said Letters Patent is hereby corrected as shown below:

Title page,
Item [30], **Foreign Application Priority Data,** insert
-- Jan. 21, 1999 (JP)…….. 11-13299 --

Signed and Sealed this

Twenty-second Day of October, 2002

Attest:

Attesting Officer

JAMES E. ROGAN
Director of the United States Patent and Trademark Office