US 20140218908A1

(19) United States

(12) Patent Application Publication

Kawashima et al.

(10) Pub. No.: US 2014/0218908 A1

(43) Pub. Date: Aug. 7, 2014

(54) LIGHT-EMITTING DEVICE AND LUMINAIRE

(75) Inventors: **Seiko Kawashima**, Kanagawa-ken (JP); **Tsuyoshi Oyaizu**, Kanagawa-ken (JP); **Hiroki Tamai**, Kanagawa-ken (JP); **Yumiko Hayashida**, Kanagawa-ken (JP); **Shuhei Matsuda**, Kanagawa-ken (JP); **Soichi Shibusawa**, Kanagawa-ken (JP); **Masahiro Ogata**, Kanagawa-ken (JP); **Kozo Uemura**, Kanagawa-ken (JP); **Kiyoshi Nishimura**, Kanagawa-ken (JP)

(73) Assignee: **TOSHIBA LIGHTING & TECHNOLOGY CORPORATION**, Yokosuka-shi, Kanagawa-ken (JP)

(21) Appl. No.: **14/235,877**

(22) PCT Filed: **Jul. 29, 2011**

(86) PCT No.: **PCT/JP2011/067527**

§ 371 (c)(1), (2), (4) Date: **Jan. 29, 2014**

Publication Classification

(51) **Int. Cl.**

H01L 33/54	(2006.01)
F21K 99/00	(2006.01)
H01L 33/50	(2006.01)

(52) **U.S. Cl.**

CPC ***H01L 33/54*** (2013.01); ***H01L 33/50*** (2013.01); ***F21K 9/17*** (2013.01); *F21Y 2103/003* (2013.01)

USPC **362/223**; 257/88

(57) **ABSTRACT**

To improve an angular color difference and emit uniform illumination light. According to an embodiment, a light-emitting device in an embodiment includes a light-emitting module (**15**). The light-emitting module (**15**) includes a substrate (**21**), a plurality of light-emitting elements (**45**) made of semiconductor, and a plurality of sealing members (**54**). The light-emitting elements (**45**) are disposed on the substrate (**21**). The sealing members (**54**) contain, as a main component, translucent resin mixed with a phosphor. The sealing members (**54**) are heaped up from the bottom surfaces thereof bonded on the substrate (**21**) and are each formed to bury a singularity or a plurality of the light-emitting elements (**45**). A ratio (H/D) of a diameter D of the bottom surfaces to height H of the heaps of the sealing members (**54**) is set to 0.22 to 1.0.

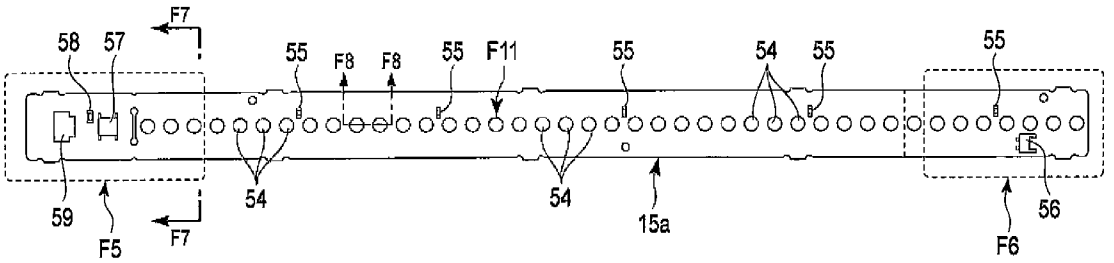

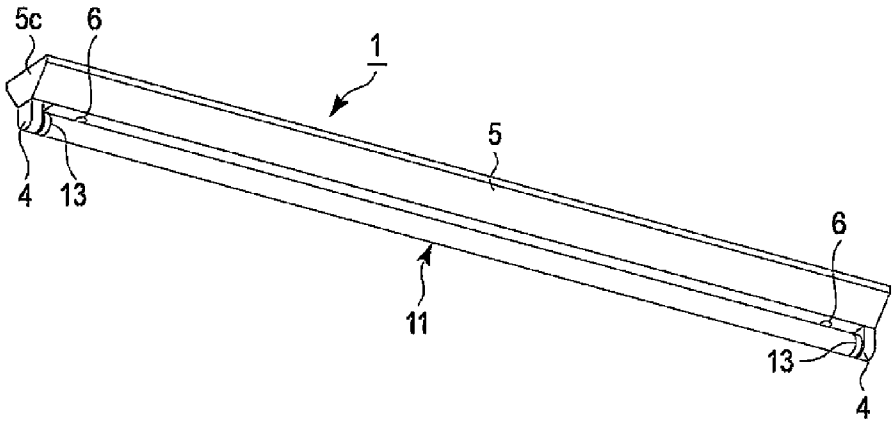
5c
6
1
5
4
13
6
11
13
4

FIG. 1

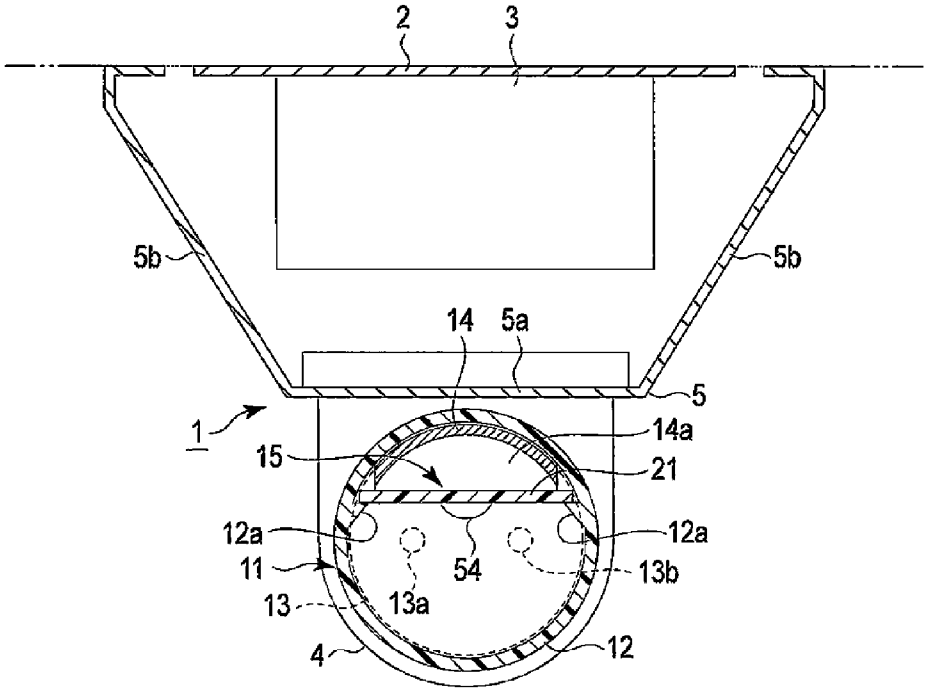
2
3
5b
5b
14
5a
5
1
14a
15
21
12a
12a
11
54
13b
13
13a
4
12

FIG. 2

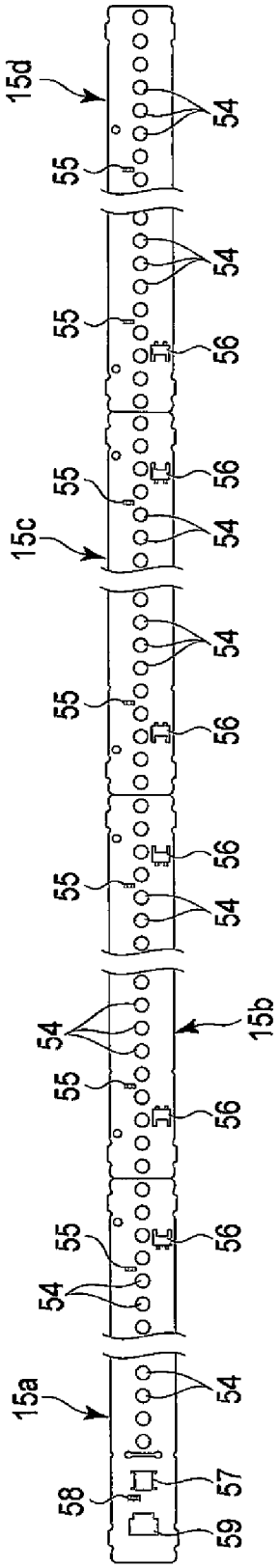

FIG. 3

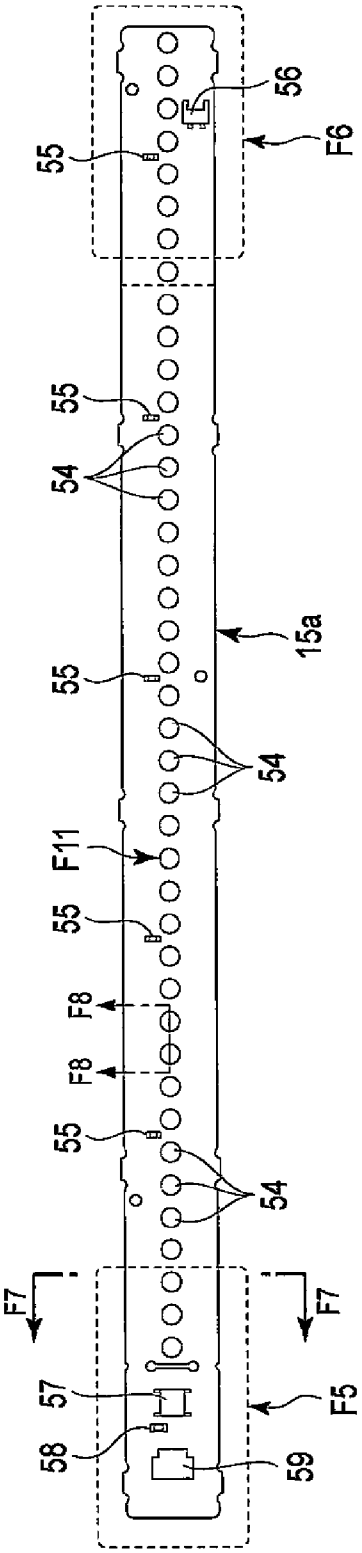

FIG. 4

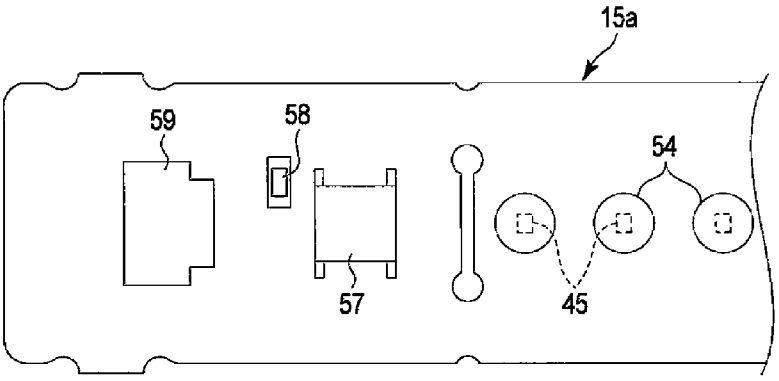

FIG. 5

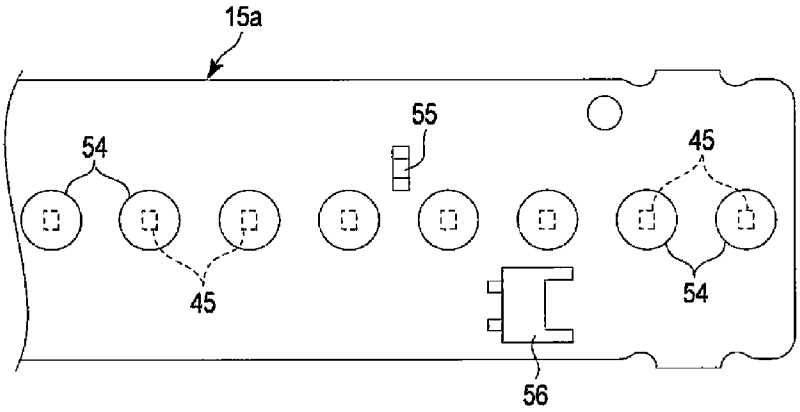

FIG. 6

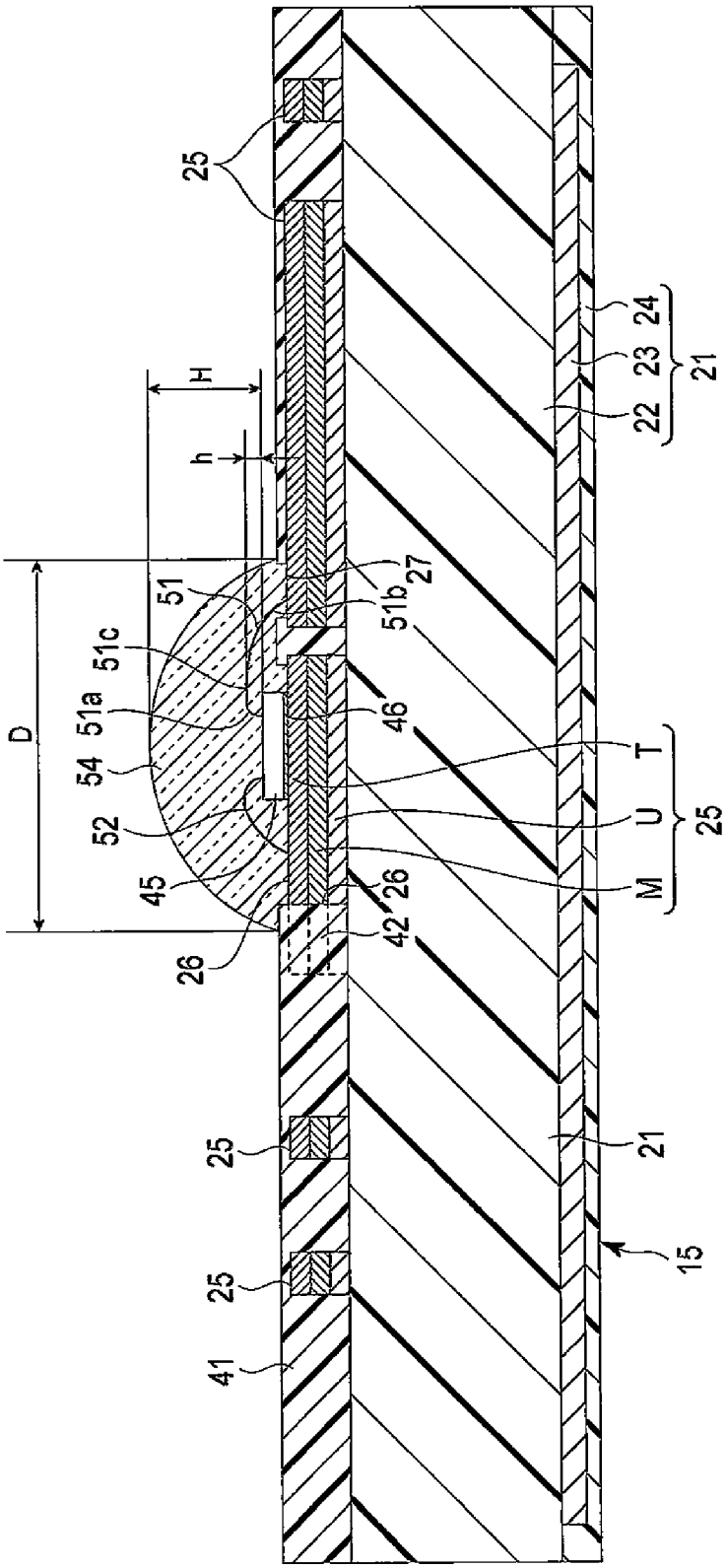
25
H
h
D
51
51c
51a
54
52
45
26
27
51b
46
T
U
M
25
42
26
24
23
22
21
21
15
25
25
41

FIG. 7

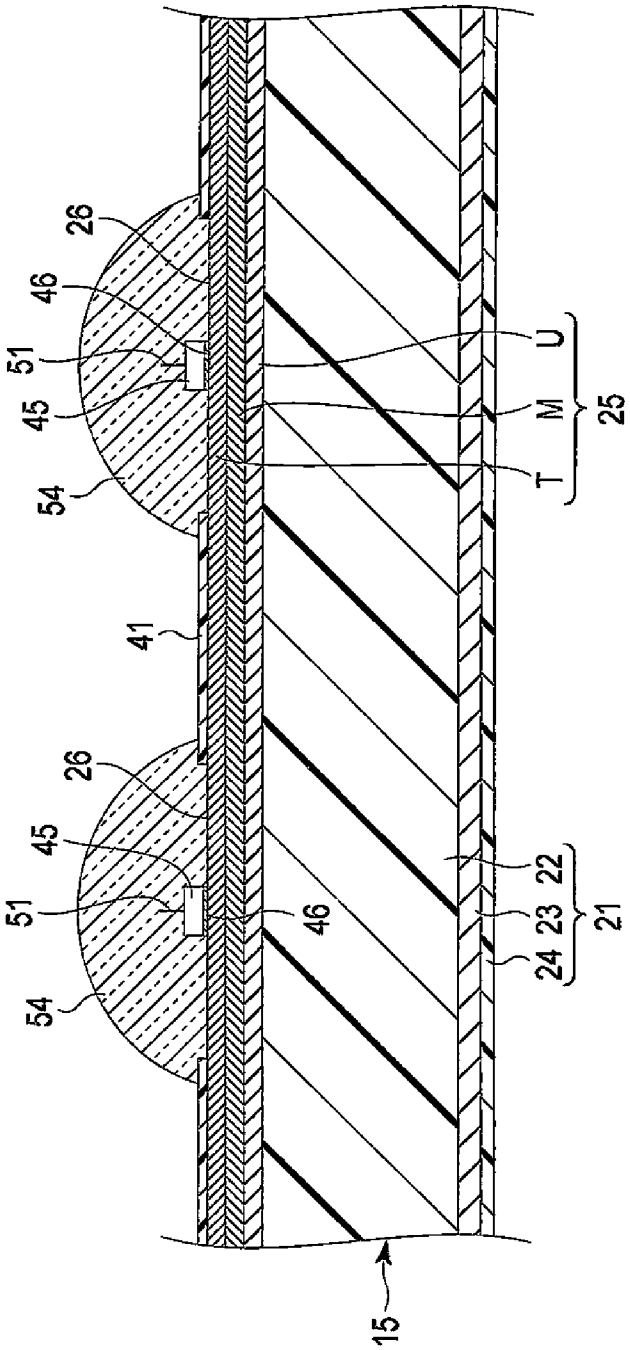

FIG. 8

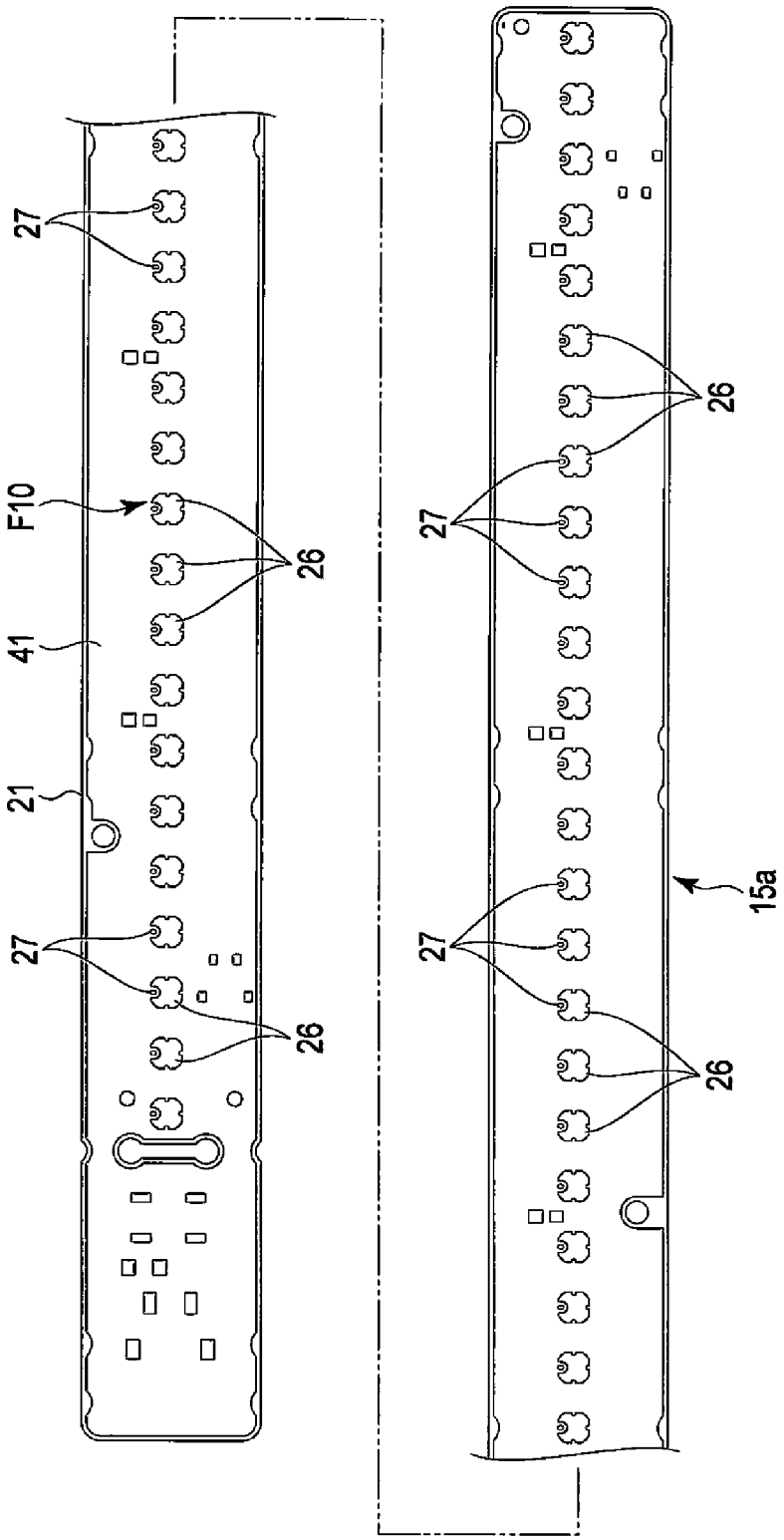

FIG. 9

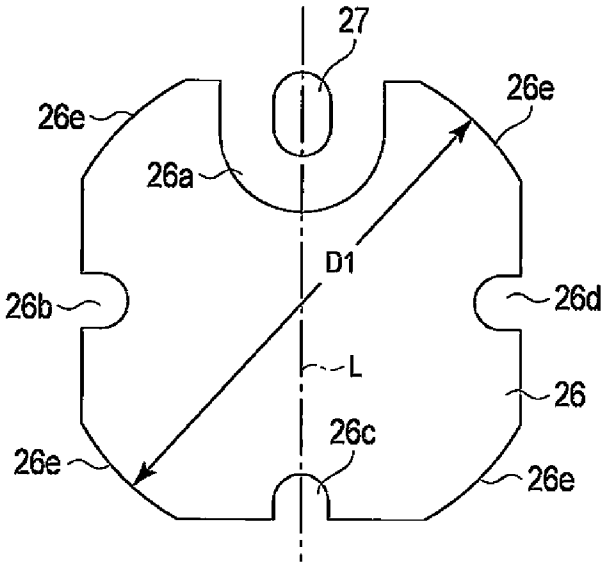
27
26e
26e
26a
D1
26b
26d
L
26
26c
26e
26e

FIG. 10

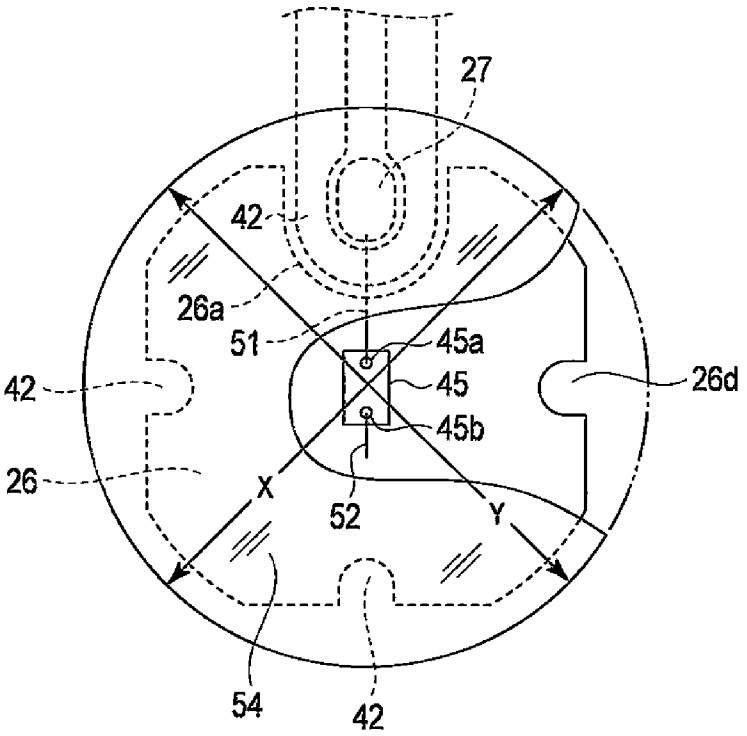
27
42
26a
51
45a
45
45b
42
26d
26
X
52
Y
54
42

FIG. 11

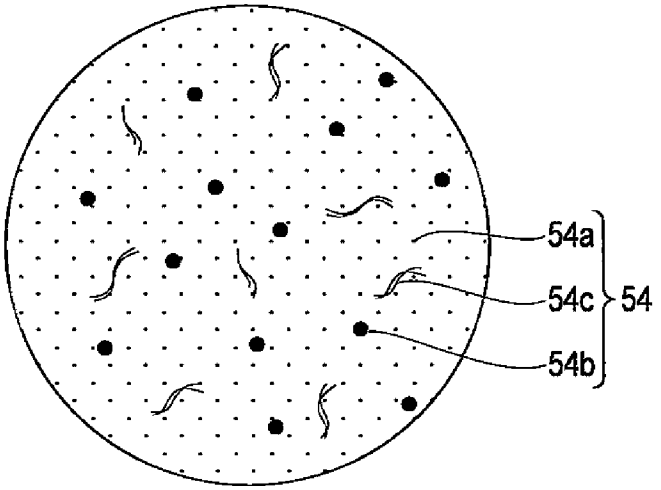

FIG. 12

LIGHT-EMITTING DEVICE AND LUMINAIRE

TECHNICAL FIELD

[0001] The present invention relates to a light-emitting device including semiconductor light-emitting elements such as LEDs (light-emitting diodes) and a luminaire such as a lighting fixture including the light-emitting device as a light source.

BACKGROUND ART

[0002] Recently, development of a light source (an LED light source) of a luminaire including a plurality of LEDs has been under way. There is known an LED array usable as the light source of the luminaire of this type. In the LED array, a plurality of first conductive patterns, a plurality of second conductive patterns, a plurality of LED chips, a plurality of bonding wires, and a plurality of transparent resins are provided on a printed board.

[0003] The surface of the printed board is covered with a white resist. The first and second conductive patterns are disposed along the longitudinal direction of the printed board. The second conductive patterns are individually adjacent to the plurality of first conductive patterns. The first conductive patterns are larger than the LED chips. The LED chips are respectively die-bonded to the first conductive patterns. The bonding wires connect the LED chips and the second conductive patterns adjacent to the first conductive patterns to which the LED chips are die-bonded. The transparent resins are formed on a substrate by potting. The transparent resin buries and seals one LED chip, the bonding wire connected to the LED chip, and the like.

[0004] Unhardened transparent resin dripped on the substrate is formed in a dome-like convex shape right after the dripping. However, the base of the transparent resin relatively easily spreads until the transparent resin is hardened and the height of the transparent resin decreases. Therefore, it is difficult to form the transparent resin in a predetermined shape.

[0005] Incidentally, in general, a phosphor is mixed in the transparent resin in order to obtain illumination light of a desired color. For example, if the LED chip emits blue light, to obtain white illumination light, a phosphor excited by the blue light to emit yellowish light is mixed in the transparent resin.

[0006] If the transparent resin mixed with the phosphor in this way is not formed in a predetermined shape, it is highly likely that the distance from the LED chip sealed by the resin to sections of the surface of the transparent resin is not equal to or larger than a fixed distance. If the distance is too small, a light emission color of the LED chip tends to be more predominant. Conversely, if the distance is too large, a color emitted from the phosphor tends to be more predominant.

[0007] Therefore, when an LED light source is visually recognized, a color difference sometimes occurs depending on an angle of viewing the LED light source (this is referred to as angular color difference).

[0008] To improve the angular color difference, a bank surrounding the transparent resin only has to be formed on the printed board to stop the spreading of the unhardened transparent resin with the bank. However, this increases the number of components and complicates a configuration. Therefore, costs increase.

CITATION LIST

Patent Literature

[0009] Patent Literature 2: JP-A-5-299702

SUMMARY OF INVENTION

Technical Problem

[0010] It is an object of an embodiment to provide a light-emitting device and a luminaire that can improve an angular color difference and emit uniform illumination light.

Solution to Problem

[0011] A light-emitting device in an embodiment includes a light-emitting module including a substrate, a plurality of light-emitting elements made of semiconductor, and a plurality of sealing members. The light-emitting elements are disposed on the substrate. The sealing members contain, as a main component, translucent resin mixed with a phosphor. The sealing members are heaped up from the bottom surfaces thereof bonded on the substrate and are each formed to bury a singularity or a plurality of the light-emitting elements. A ratio (H/D) of a diameter D of the bottom surfaces to height H of the heaps of the sealing members is set to 0.22 to 1.0.

BRIEF DESCRIPTION OF THE DRAWINGS

[0012] FIG. **1** is a perspective view showing a lighting fixture according to a first embodiment.

[0013] FIG. **2** is a sectional view showing the lighting fixture shown in FIG. **1**.

[0014] FIG. **3** is a front view showing a state in which a plurality of light-emitting modules included in a lamp of the lighting fixture shown in FIG. **1** are arranged.

[0015] FIG. **4** is a front view showing one of the light-emitting modules shown in FIG. **3**.

[0016] FIG. **5** is a front view showing an F**5** portion in FIG. **4** in enlargement.

[0017] FIG. **6** is a front view showing an F**6** portion in FIG. **4** in enlargement.

[0018] FIG. **7** is a sectional view taken along line F**7**-F**7** in FIG. **4**.

[0019] FIG. **8** is a sectional view taken along line F**8**-F**8** in FIG. **4**.

[0020] FIG. **9** is a front view showing the light-emitting module shown in FIG. **4** in a state in which mounted components and sealing members are removed.

[0021] FIG. **10** is an enlarged view of an F**10** portion in FIG. **9**.

[0022] FIG. **11** is an enlarged view showing an F**11** portion in FIG. **4** with a part thereof cut out.

[0023] FIG. **12** is a schematic diagram showing the configuration of the sealing member included in the light-emitting module shown in FIG. **4**.

DESCRIPTION OF EMBODIMENTS

[0024] A light-emitting device according to a first embodiment includes a light-emitting module. The light-emitting module includes a substrate, a plurality of light-emitting elements made of semiconductor disposed on the substrate, and a plurality of sealing members containing, as a main component, translucent resin mixed with a phosphor, heaped up from the bottom surfaces thereof bonded on the substrate, and

each formed to bury a singularity or a plurality of the light-emitting elements, a ratio (H/D) of a diameter D of the bottom surfaces to height H of the heaps being set to 0.22 to 1.0.

[0025] The light-emitting device in the first embodiment can be used as a light source mounted on, for example, a lighting fixture or a display device.

[0026] In the first embodiment, as the substrate, a single-layer or double-layer resin substrate can also be used. Further, in order to suppress a warp of the substrate and improve thermal radiation properties from the substrate, it is preferable to use a substrate having a configuration in which a metal foil of aluminum, iron, copper, or the like is laminated on the rear surface thereof.

[0027] In the first embodiment, representative examples of the light-emitting element made of semiconductor include an LED (light-emitting diode) chip. However, a semiconductor laser and the like can also be used. If the LED chip is used as the light-emitting element, a light emission color of the LED chip may be any one of red, green, and blue. LED chips having different light emission colors can also be used in combination.

[0028] In the first embodiment, as the resin contained as the main component of the sealing members that bury the light-emitting elements and the like, translucent and thermoplastic synthetic resin, for example, various kinds of epoxy resin or various kinds of silicone resin can be used. In the first embodiment, the number of the light-emitting elements buried by each of the sealing members is not limited to one and may be plural.

[0029] In the first embodiment, since the aspect ratio (H/D) of each of the sealing members, which seal the light-emitting element, is specified as explained above, a distance equal to or larger than 1 mm can be secured as a distance from the light-emitting element to positions on the surface of the sealing member. Therefore, it is possible to suppress an angular color difference without requiring a bank for preventing the sealing member from spreading before being hardened.

[0030] In a light-emitting device in a second embodiment, in the first embodiment, the sealing member is resin-based silicone resin and the hardness of the sealing member after formation is equal to or higher than 54 and equal to or lower than 94 in Shore hardness.

[0031] In the second embodiment, in the first embodiment, further, since the Shore hardness of the resin-based silicone resin forming the sealing member is in a range of (74±20), thixotropy until the hardening of the sealing members is improved. Consequently, the sealing member is suppressed from spreading before being hardened and decreasing in height. A distance equal to or larger than 1 mm can be secured as the distance from the light-emitting element to the positions on the surface of the sealing member. On the other hand, if the Shore hardness of the sealing member is lower than 54, the thixotropy decreases and it is difficult to secure a distance equal to or larger than 1 mm as the distance from the light-emitting element to the positions on the surface of the sealing member. If the Shore hardness of the sealing member exceeds 94, fluidity of the unhardened sealing member is lower than a specified value. Consequently, if the sealing member is formed by, for example, potting, an appropriate amount of the potting is difficult. Therefore, it is more likely that a potting failure is caused.

[0032] In a light-emitting device in a third embodiment, in the first embodiment, a wiring pattern is formed on the substrate. The light-emitting element is mounted on a mounting pad formed by a part of the wiring pattern. A wire connecting section adjacent to the mounting pad is formed on the substrate. The light-emitting device includes a wire that connects the mounting pad and the wire connecting section. One end of the wire connected to the light-emitting element is projected in the thickness direction of the light-emitting element to separate from the element. The other end of the wire connected to the wire connecting section is oblique. An intermediate portion of the wire between the one end and the other end is formed to be bent from the one end to be parallel to the light-emitting element. Projection height of the intermediate portion with respect to the light-emitting element is equal to or larger than 75 μm and equal to or smaller than 125 μm.

[0033] In the third embodiment, the wire is provided by wire bonding. A thin metallic wire, for example, a thin wire of gold can be suitably used. In the third embodiment, the description that the intermediate portion of the wire is formed to be bent from the one end of the wire to be parallel to the light-emitting element includes the meaning that the intermediate portion is parallel to the light-emitting element. However, actually, in some case, the intermediate portion is not completely parallel to the light-emitting element because of fluctuation in manufacturing. Such a fluctuating form is also included in the scope of the wording "to be parallel". Therefore, in the third embodiment, it is possible to rephrase the description as "the intermediate portion of the wire is substantially parallel to the light-emitting element". Therefore, a form in which the intermediate portion of the wire is obliquely bent from the one end of the wire and provided such that an angle formed by the one end and the intermediate portion is an acute angle is outside the scope of the wording.

[0034] Incidentally, the sealing member expands and contracts according to light emission and a stop of the light emission device. Stress is applied to the wire buried in the sealing member because of the expansion and contraction. However, in the third embodiment, the intermediate portion of the wire is formed to be bent from the one end of the wire connected to the light-emitting element to be parallel to the light-emitting element. At the same time, the projection height of the intermediate portion of the wire with respect to the light-emitting element is specified to be equal to or larger than 75 μm and equal to or smaller than 125 μm.

[0035] Consequently, the stress is reduced according to a reduction in the influence of the expansion and contraction of the sealing member on the wire. Therefore, it is possible to suppress the wire from being cut in a connecting section of the one end of the wire and the light-emitting element.

[0036] In a light-emitting device in a fourth embodiment, in the third embodiment, a protection member made of resin covering the wiring pattern is formed on the substrate. The mounting pad is covered with the sealing member. A groove is formed in at least one part of a peripheral portion of the mounting pad. A filled part of the protection member filled in the groove is bonded to the sealing member.

[0037] In the light-emitting device in the fourth embodiment, in the third embodiment, further, adhesiveness of the sealing member made of resin and the mounting pad made of metal covered with the sealing member is inferior to adhesiveness of resins. Consequently, it is likely that the sealing member peels. However, the filled part of the protection member made of resin filled in the groove in the peripheral portion of the mounting pad and the mounting pad are

bonded. Therefore, holding performance of the sealing resin is improved and the peeling of the sealing resin can be suppressed.

[0038] A light-emitting device in a fifth embodiment further includes, in the first embodiment, a diffusive translucent pipe in which the light-emitting module is housed. If the pipe is made of resin in this embodiment, examples of the resin include polycarbonate resin.

[0039] In the fifth embodiment, in the first embodiment, further, it is possible to diffuse, with the pipe, light emitted from the light-emitting module and emit the light to the outside of the pipe as illumination light. Therefore, if the pipe is straight, the light-emitting device in the fifth embodiment can be implemented as a straight tube type lamp, which is a light source. If the pipe is annular, the light-emitting device in the fifth embodiment can be implemented as an annular lamp, which is a light source.

[0040] In a light-emitting device in a sixth embodiment, in the fifth embodiment, the translucency of the pipe is equal to or lower than 85% and the disposing pitch of the light-emitting elements is equal to or larger than 5 mm and equal to or smaller than 9 mm.

[0041] In the sixth embodiment, since the translucency of the pipe is equal to or lower than 85%, it is possible to make it less easy for the plurality of light-emitting elements from changing to light spots to be reflected on the pipe. If the disposing pitch of the light-emitting elements is smaller than 5 mm, the light-emitting elements are arranged at high density to be a main cause of an increase in costs. If the disposing pitch of the light-emitting elements exceeds 9 mm, the light-emitting elements are arranged at low density and further tend to be reflected on the pipe.

[0042] Therefore, in the sixth embodiment, in the fifth embodiment, further, it is possible to suppress, at low costs, the plurality of light-emitting elements from changing to light spots to be reflected on the pipe and flash the pipe at substantially uniform brightness.

[0043] A luminaire in a seventh embodiment is a luminaire including a luminaire main body, at least a pair of sockets attached to the luminaire main body, and a straight tube type light-emitting device including a diffusive translucent straight pipe, a light-emitting module formed long in an extending direction of the pipe and housed in the pipe, and caps attached to longitudinal direction both ends of the pipe, the light-emitting device being supported detachably to the sockets. The light-emitting module has a configuration explained below.

[0044] The light-emitting module includes a substrate, a plurality of light-emitting elements made of semiconductor disposed on the substrate, and a plurality of sealing members containing, as a main component, translucent resin mixed with a phosphor, heaped up from the bottom surfaces thereof bonded on the substrate, and each formed to bury a singularity or a plurality of the light-emitting elements, a ratio (H/D) of a diameter D of the bottom surfaces to height H of the heaps being set to 0.22 to 1.0.

[0045] The seventh embodiment is the luminaire including the light-emitting device as a straight tube type lamp, which is a light source. The light-emitting device includes the light-emitting module described in the first embodiment. Therefore, since a distance equal to or larger than 1 mm is secured as a distance from the light-emitting element to positions on the surface of the sealing member, an effect can be expected that it is possible to provide the luminaire that can improve an angular color difference and emit uniform illumination light.

First Embodiment

[0046] A light-emitting device in a first embodiment and a luminaire, for example, a lighting fixture including the light-emitting device as a light source are explained in detail below with reference to FIGS. **1** to **12**.

[0047] Reference numeral **1** in FIGS. **1** and **2** denotes a lighting fixture for one lamp. This lighting fixture **1** includes a fixture main body (a luminaire main body) **2**, a lighting circuit **3**, a pair of sockets **4**, and a reflecting member **5** and includes, as a light-emitting device, for example, a straight tube type lamp **11** forming a light source.

[0048] The fixture main body **2** shown in FIG. **2** is made of, for example, a metal plate having an elongated shape. The fixture main body **2** extends in the front back direction of the paper surface on which FIG. **2** is drawn. The fixture main body **2** is fixed to, for example, an indoor ceiling using a not-shown plurality of screws.

[0049] The lighting circuit **3** is fixed to an intermediate portion in the longitudinal direction of the fixture main body **2**. The lighting circuit **3** is configured to receive a commercial alternating current power supply and generate a direct-current output. The lighting circuit **3** supplies the direct-current output to a below-mentioned lamp **11**.

[0050] Note that, a power supply terminal block, a plurality of member supporting fittings, a pair of socket supporting members, and the like, all of which are not shown in the figure, are attached to the fixture main body **2**. A power supply line of the commercial alternating-current power supply drawn in from the attic is connected to the power supply terminal block. Further, the power supply terminal block is electrically connected to the lighting circuit **3** and below-mentioned sockets **4** through a not-shown intra-fixture wire.

[0051] The sockets **4** are coupled to the socket supporting member and respectively disposed at longitudinal direction both ends of the fixture main body **2**. Both the sockets **4** are existing sockets matching, for example, caps **13** of a G13 type included in the below-mentioned lamp **11**. However, the sockets **4** are not limited to the existing sockets. Sockets of types matching a type of a cap can be used.

[0052] The sockets **4** include a not-shown pair of power supply terminals and the like to which below-mentioned terminal pins **13***a* and **13***b* are connected. In order to supply electric power to the below-mentioned lamp **11**, the intra-fixture wire is connected to only the power supply terminal of the socket **4** on one side. A wire for power supply is not connected to the other socket **4**.

[0053] The reflecting member **5** includes a bottom plate section **5***a*, a side plate section **5***b*, and a pair of end plates **5***c* (only one of which is shown in FIG. **1**) made of, for example, metal and is formed in a trough shape, the upper surface of which is opened.

[0054] The bottom plate section **5***a* is flat. The side plate section **5***b* is bent obliquely upward from width direction both ends of the bottom plate section **5***a*. The pair of end plates **5***c* respectively closes end face openings formed by the bottom plate section **5***a* and ends in the longitudinal direction of the side plate section **5***b*. A metal plate forming the bottom plate section **5***a* and the side plate section **5***b* is made of a color steel plate, the surface of which assumes a whitish color. Therefore, the surfaces of the bottom plate section **5***a* and the side plate section **5***b* are formed as reflection surfaces. Not-shown

socket through-holes are respectively opened at longitudinal direction both ends of the bottom plate section **5***a*.

[0055] The reflecting member **5** covers the fixture main body **2** and components attached to the fixture main body **2**. This state is retained by detachable decoration screws (see FIG. **1**) **6**. The decoration screws **6** can be turned by hand without using a tool. The decoration screws **6** are screwed into the member supporting metal piercing through the bottom plate section **5***a* upward. The sockets **4** are projected to below the bottom plate section **5***a* through the socket through-holes.

[0056] The lighting fixture **1** is not limited to the lighting fixture for one lamp. The lighting fixture **1** can also be implemented as a lighting fixture for two lamps capable of supporting two lamps **11** explained below.

[0057] The lamp **11** detachably supported by the sockets **4** is explained below with reference to FIGS. **2** to **12**.

[0058] The lamp **11** has dimensions and an outer diameter same as those of an existing fluorescent lamp. The lamp **11** includes a pipe **12**, the caps **13** attached to ends of the pipe **12**, a beam **14**, and at least one, for example, four light-emitting modules **15**. Note that, when the four light-emitting modules **15** are distinguished, the light-emitting modules **15** are illustrated and explained with suffixes a to d added thereto.

[0059] The pipe **12** is formed, for example, straight by a translucent resin material. As the resin material forming the pipe **12**, polycarbonate resin mixed with a diffusing material can be suitably used. The diffusion transmittance of the pipe **12** is 90% to 95%. As shown in FIG. **2**, the pipe **12** has a pair of convex sections **12***a* on the inner surface in a part, which is an upper part in a state of use of the pipe **12**.

[0060] The type of the caps **13** is G13. The caps **13** are respectively attached to the longitudinal direction both ends of the pipe **12**. The caps **13** are detachably connected to the sockets **4**. The lamp **11** supported by the sockets **4** by the connection is arranged right below the bottom plate section **5***a* of the reflecting member **5**. A part of light emitted from the lamp **11** to the outside is made incident on the side plate section **5***b* of the reflecting member **5**.

[0061] The respective caps **13** include terminal pins **13***a* and **13***b* as representatively shown in FIG. **2**. The terminal pins **13***a* and **13***b* are projected to the outside of the caps **13**. The terminal pins **13***a* and **13***b* are electrically insulated from each other. The terminal pins **13***a* and **13***b* of the caps **13** are connected to the sockets **4**, whereby the lamp **11** is supported by the sockets **4**. In this supported state, electric power can be supplied to the lamp **11** by the power supply terminal in the socket **4** on one side and the terminal pins **13***a* and **13***b* set in contact with the power supply terminal.

[0062] As shown in FIG. **2**, the beam **14** is housed in the pipe **12**. The beam **14** is a bar material excellent in mechanical strength and formed of, for example, an aluminum alloy to reduce weight. Longitudinal direction both ends of the beam **14** is coupled to the caps **13** while being electrically insulated therefrom. The beam **14** includes a plurality of substrate supporting sections **14***a* (only one is shown in FIG. **2**) formed in, for example, a rib shape.

[0063] As shown in FIG. **3**, all the four light-emitting modules **15***a* to **15***d* are formed in an elongated rectangular shape and arranged to form a straight row. The length of the row is substantially equal to the total length of the beam **14**. The light-emitting modules **15***a* to **15***d* are fixed by not-shown screws screwed into the beam **14** through the light-emitting modules **15***a* to **15***d*.

[0064] Therefore, the light-emitting modules **15***a* to **15***d* are housed in the pipe **12** together with the beam **14**. In this supported state, width direction both ends of the light-emitting modules **15***a* to **15***d* are placed on the convex sections **12***a* of the pipe **12**. Consequently, the light-emitting modules **15***a* to **15***d* are disposed substantially in parallel further on the upper side than a largest width section in the pipe **12**.

[0065] As shown in FIGS. **7** and **8**, each of the light-emitting modules **15** includes a substrate **21**, a wiring pattern **25**, a protection member **41**, a plurality of light-emitting elements **45**, a first wire **51**, a second wire **52**, a sealing member **54**, and various electric components **55** to **59**.

[0066] The substrate **21** includes a base **22**, a metal foil **23**, and a cover layer **24**.

[0067] The base **22** is made of resin, for example, glass epoxy resin. A substrate (FR-4) made of the glass epoxy resin is low in thermal conductivity and relatively inexpensive. The base **22** may be formed by a glass composite substrate (CEM-3) or other synthetic resin materials.

[0068] As shown in FIGS. **7** and **8**, the metal foil **23** is laminated on the rear surface of the substrate **21** and formed by, for example, a copper foil. The cover layer **24** is laminated over a peripheral portion rear surface of the metal foil **23** and the base **22**. The cover layer **24** is formed by a resist layer made of an insulating material, for example, synthetic resin. The substrate **21** is reinforced by the metal foil **23** and the cover layer **24**, which are laminated on the rear surface of the substrate **21**, not to warp.

[0069] As shown in FIGS. **7** and **8**, the wiring pattern **25** is formed on the front surface of the base **22** (i.e., the front surface of the substrate **21**) in a three-layer structure. A first layer U is formed of copper plated on the front surface of the base **22**. A second layer M is plated on the first layer U and formed of nickel. A third layer T is plated on the second layer M and formed of silver.

[0070] Therefore, the surface of the wiring pattern **25** is made of silver. The third layer T made of silver forms a reflection surface. The total light reflectance of the third layer T is equal to or higher than 90%.

[0071] For example, white resist layer containing electrically insulative synthetic resin as a main component can be suitably used for the protection member **41**. The white resist layer functions as a reflection layer having high light reflectance. The protection member **41** is formed on the substrate **21** to cover the most part of the wiring pattern **25**. That is, the protection member **41** covers the wiring pattern **25** while leaving a plurality of parts of the wiring pattern **25** as mounting pads **26**. At the same time, the protection member **41** covers the wiring pattern **25** while leaving a plurality of parts of the wiring pattern **25** as wire connecting sections **27**. Further, the protection member **41** covers the wiring pattern **25** while leaving mounting parts of the below-mentioned electric components **55** to **59**.

[0072] At a stage when the protection member **41** is formed on the substrate **21**, the mounting pads **26** and the wire connecting sections **27** are formed in portions where the third layer T is exposed without being covered with the protection member **41**. As shown in FIG. **9**, the mounting pads **26** are arranged in the longitudinal direction of the substrate **21**. The wire connecting sections **27** are respectively disposed in the vicinities of the mounting pads **26** while forming pairs with the mounting pads **26**. Therefore, the wire connecting sec-

tions **27** are arranged in the longitudinal direction of the substrate **21** at a disposing pitch same as a disposing pitch of the mounting pads **26**.

[0073] As shown in FIGS. **10** and **11**, the mounting pad **26** has grooves **26***a* to **26***d* in at least one part, for example, four parts in the peripheral portion of the mounting pad **26**. The grooves **26***a* to **26***b* are separated from one another by 90 degrees. The depths of the grooves **26***a* to **26***b* are 1/10 to 1/5 of a below-mentioned pad diameter D**1**. Further, the peripheral edge of the mounting pad **26** has arcuate edge portions **26***e* at every 90 degrees. The edge portions **26***e* are formed between the grooves adjacent to each other in the peripheral direction of the mounting pad **26** among the grooves **26***a* to **26***d*.

[0074] Since the mounting pad **26** has the grooves **26***a* to **26***b* and the edge portions **26***e*, the mounting pad **26** is formed in a substantial clover shape. The groove **26***a* is larger than the other three grooves **26***b* to **26***d*. The wire connecting section **27** is disposed on the inside of the groove **26***a*. The mounting pad **26** is formed symmetrically with respect to a straight line L (indicated by an alternate long and short dash line in FIG. **10**) that passes the center of the mounting pad **26** and the wire connecting section **27**.

[0075] In this way, the mounting pad **26** is formed in the substantial clover shape and the wire connecting section **27** is provided in the groove **26***a*. This can contribute to a reduction in a diameter D of the below-mentioned sealing member **54**. A pad diameter D**1** of the mounting pad **26** is, for example, 3.6 mm. The pad diameter D**1** is a dimension between the edge portions **26***e* located to form a pair across the center of the mounting pad **26**.

[0076] The protection member **41** is filled in the grooves **26***a* to **26***b*. Portions of the protection member **41** filled in the grooves **26***a* to **26***b* are referred to filled parts **42** (see FIGS. **7** and **11**). The filled parts **42** form convex portions projected toward the center of the mounting pad **26**. The filled parts **42** are projected from the surface of the third layer T with respect to the laminating direction of the wiring pattern **25** (see FIG. **7**). When the below-mentioned light-emitting element **45** is mounted on the mounting pad **26**, at least one of the filled parts **42** is used as a reference for deducing a mounting position of the light-emitting element **45**. The filled parts **42** are filled in the groove **26***a* avoiding the wire connecting section **27**.

[0077] The protection member **41** is filled in the grooves **26***a* to **26***b*. The portions of the protection member **41** filled in the grooves **26***a* to **26***b* are referred to filled parts **42** (see FIGS. **7** and **11**). The filled parts **42** are projected from the surface of the third layer T with respect to the laminating direction of the wiring pattern **25** (see FIG. **7**). The filled parts **42** are filled in the groove **26***a* avoiding the wire connecting section **27**.

[0078] The plurality of light-emitting elements **45** are formed by bare chips of LEDs. As the bare chips, for example, bare chips of LEDs that emit blue light are used. The bare chip of the LED includes a light-emitting layer on one surface of an element substrate made of sapphire. A plane shape of the bare chip is rectangular. As shown in FIG. **11**, an element electrode **45***b* forming an anode and an element electrode **45***a* forming a cathode are provided side by side, for example, in the longitudinal direction of the bare chip of the LED.

[0079] In the light-emitting elements **45**, the other surface of the element substrate on the opposite side of the one surface is fixed to the mounting pads **26**, which are the reflection surfaces, using an adhesive **46** (see FIGS. **7** and **8**). In this case, the light-emitting elements **45** are respectively bonded on the mounting pads **26** with the arrangement of the element electrodes **45***a* and **45***b* aligned with the arrangement of the grooves **26***a* and **26***c* of the mounting pad **26**. The light-emitting elements **45** mounted on the mounting pads **26** form a light-emitting element row arranged in the longitudinal direction of the substrate **21** (a direction in which the center axis extends). In the row, a disposing pitch of the light-emitting elements **45** is equal to or larger than 5 mm and equal to or smaller than 9 mm.

[0080] A bonding part of the light-emitting element **45** is preferably the center of the mounting pad **26**. Consequently, light emitted from the light-emitting element **45** and made incident on the mounting pad **26** can be reflected in a reflection surface region around the light-emitting element **45**.

[0081] In this case, the light made incident on the mounting pad **26** is more intense in a part closer to the light-emitting element **45**. The intense light can be reflected in the reflection surface region. The grooves **26***a* to **26***d* are out of the reflection surface region where the intense light is reflected. Therefore, the area of the surface (the reflection surface) of the mounting pad **26** is reduced by the grooves **26***a* to **26***d* in the peripheral portion of the mounting pad **26**. However, this does not substantially reduce reflection performance of the mounting pad **26** and can be neglected.

[0082] Light emission of the light-emitting element **45** formed by the bare chip of the LED is realized by feeding a forward direction current to a p-n junction of a semiconductor. Therefore, the light-emitting element **45** is a solid-state element that directly converts electric energy into light. The light-emitting element **45** that emits light according to such a light emission principle has an energy saving effect compared with an incandescent lamp that causes a filament to glow at high temperature through energization and emits visible light through thermal radiation of the filament.

[0083] The adhesive **46** preferably has thermal resistance in obtaining durability of bonding and further has translucency in order to allow reflection even right under the light-emitting element **45**. As such an adhesive **46**, it is possible to suitably use a silicone resin-based adhesive.

[0084] The first wire **51** and the second wire **52** are made of a thin metallic wire, for example, a thin wire of gold and wired using a bonding machine.

[0085] As shown in FIG. **7**, the first wire **51** is provided to electrically connect the light-emitting element **45** and the wiring pattern **25**. In this case, one end **51***a* of the first wire is connected to the element electrode **45***a* of the light-emitting element **45**. The other end **51***b* of the first wire **51** is connected to the wire connecting section **27** of the wiring pattern **25**.

[0086] The one end **51***a* of the first wire **51** is projected in a direction away from the light-emitting element **45** in the thickness direction of the light-emitting direction **45**. The wire connecting section **27** is closer to the substrate **21** side than the element electrodes **45***a* and **45***b* of the light-emitting element **45** with respect to the thickness direction of the light-emitting element **45**. The other end **51***b* of the first wire **51** is obliquely connected to the wire connecting section **27**.

[0087] An intermediate portion **51***c* of the first wire **51** is a part occupying a portion between the one end **51***a* and the other end **51***b*. As shown in FIG. **7**, the intermediate portion **51***c* is formed to be bent from the one end **51***a* to be parallel to the light-emitting element **45**. Projection height h of the intermediate portion **51***c* with respect to the light-emitting element **45** is specified to be equal to or larger than 75 μm and equal to

or smaller than 125 μm, preferably, equal to or larger than 60 μm and equal to or smaller than 100 μm. Consequently, the wire-bonded first wire **51** is wired with the height based on the light-emitting element **45** retained low (this wiring structure is referred to as low wiring loop in this specification).

[0088] The intermediate portion **51***c* and the other end **51***b* of the first wire **51** wired in this way extend in a direction orthogonal to a direction in which the light-emitting elements **45** form a row. Such wiring is realized by the explained arrangement of the light-emitting element **45** with respect to the mounting pad **26**. The length of the first wire **51** can be reduced by the wiring. Therefore, the costs of the first wire **51** can be reduced compared with the case in which the first wire **51** is arranged obliquely to the light-emitting element **45** in plan view.

[0089] The second wire **52** is provided to connect the light-emitting element **45** and the mounting pad **26** through wire bonding. In this case, one end of the second wire **52** is connected to the element electrode **45***b* of the light-emitting element **45** by first bonding. The other end of the second wire **52** is connected to the mounting pad **26** by second bonding.

[0090] The sealing member **54** is formed by mixing appropriate amounts of a phosphor **54***b* and a filler **54***c* in resin **54***a*, which is a main component, as schematically shown in FIG. **12**.

[0091] Resin-based silicone resin or hybrid silicone resin having translucency is used for the resin **54***a*. The resin-based silicone resin and the hybrid silicone resin are harder than translucent silicone rubber because the resin-based silicone resin and the hybrid silicone resin have a three-dimensionally crosslinked structure.

[0092] The phosphor **54***b* is excited by light emitted by the light-emitting element **45** and emits light having a color different from a color of light emitted by the light-emitting element **45**. In the first embodiment, since the light-emitting element **45** emits blue light, a yellow phosphor that emits, through the excitation, yellowish light having a complementary color relation with the blue light is used. Consequently, it is possible to emit white light as output light of the lamp **11**, which is the light-emitting device.

[0093] The sealing member **54** is formed on the substrate **21** to seal the mounting pad **26**, the wire connecting section **27**, the light-emitting element **45**, the first wire **51**, and the second wire **52** by burying the same. The sealing member **54** is formed by being dripped targeting the light-emitting element **45** in an unhardened state and thereafter subjected to heat treatment to be hardened. A dispenser or the like is used for the dripping (potting) of the sealing member **54**.

[0094] The hardened sealing members **54** are arranged on the substrate **21** at a predetermined interval in the longitudinal direction of the substrate **21** and disposed to form a sealing member row according to the row of the light-emitting elements **45**. The hardened sealing members **54** are bonded on the substrate **21**. That is, in the case of this embodiment, the bottom surface of the sealing member **54** is bonded to the mounting pad **26** of the wiring pattern **25** formed on the substrate **21** and the protection member **41** around the mounting pad **26**. The sealing members **54** are heaped up from the bottom surfaces thereof and are each formed to bury the light-emitting elements **45**. The sealing members **54** are formed in a dome shape or a Fuji mountain shape.

[0095] The diameter D (see FIG. **7**) of the sealing member **54** is specified to 1.0 to 1.4 times of the pad diameter D**1**. In the case of the first embodiment, the diameter D is 4.0 mm to 5.0 mm. Consequently, a part of the mounting pad **26** does not protrude from the sealing member **54**. At the same time, the sealing member **54** is not excessive with respect to the mounting pad **26**. It is possible to use a proper amount of the sealing member **54** while retaining a below-mentioned aspect ratio. Note that a frame or the like that surrounds the light-emitting element **45** and the like in order to specify the height H of the heap of the sealing member **54** from the bottom surface and the diameter D of the bottom surface is absent. Therefore, the diameter D and the height H of the sealing member **54** are controlled according to a dripping amount, hardness, and time until hardening of the sealing member **54**.

[0096] The height H of the heap of the sealing member **54** based on the light-emitting element **45** is equal to or larger than 1.0 mm. The aspect ratio of the sealing member **54** is set to 0.22 to 1.00 in order to secure the height H equal to or larger than 1.0 mm. The aspect ratio of the sealing member **54** is a ratio of the diameter D of the bottom surface of the sealing member **54** to the height H of the heap of the sealing member **54** that buries the light-emitting element **45**.

[0097] Further, a ratio of orthogonal diameters of the sealing member **54** is 0.55 to 1.00. The ratio of the orthogonal diameters indicates a ratio of diameters X and Y orthogonal to each other of the bottom surface of the sealing member **54** bonded to the substrate **21** as shown in FIG. **11**. The diameter X is the diameter of the bottom surface arbitrarily drawn to pass through the center of the light-emitting element **45**. The diameter Y is the diameter of the bottom surface drawn to be orthogonal to the diameter X.

[0098] The electric component **55** shown in any one of FIGS. **4** to **6** is a capacitor. The electric component **56** is a connector. The electric component **57** is a rectifying diode. The electric component **58** is a resistor. The electric component **59** is an input connector.

[0099] The electric component **55** consisting of the capacitor is mounted in each of the four light-emitting modules **15**. The capacitor suppresses noise from being superimposed on the wiring patterns **25** of the light-emitting modules **15** to thereby prevent the light-emitting elements **45** to emit light by mistake.

[0100] As shown in FIG. **3**, concerning the light-emitting modules **15***a* and **15***d* disposed at longitudinal direction both ends of a module row formed by the four light-emitting modules **15**, the electric component **56** consisting of the connector is mounted at only one ends of the light-emitting modules **15***a* and **15***d*. Further, concerning the light-emitting modules **15***b* and **15***c* disposed between the light-emitting modules **15***a* and **15***d*, the electric component **56** is mounted at each of longitudinal direction both ends of the light-emitting modules **15***a* and **15***d*. The electric components **56** of the adjacent light-emitting modules **15** are connected by a not-shown electric wire extending across the electric components **56**. Consequently, the light-emitting modules **15** are electrically connected in series.

[0101] As shown in FIG. **5**, all the electric components **57** to **59** are mounted at the other end of the light-emitting module **15***a*. The electric component **59** consisting of the input connector is connected to the wiring pattern **25** of the light-emitting module **15**. The electric component **59** consisting of the input connector is connected to the wiring pattern **52** of the light-emitting module **15**. The not-shown electric wire connected to the electric component **59** is connected to each of the terminal pins **13***a* and **13***b* of the cap **13** disposed closer to the electric component **59**.

[0102] When the straight tube type lamp **11** having the above-mentioned configuration is supported by the sockets **4** of the lighting fixture **1** and electric power is supplied to the lamp **11**, each of the light-emitting elements **45** emits light. According to the light emission, white light emitted from the sealing member **54** is diffused by the pipe **12** and transmitted through the pipe **12** to be emitted to the outside. Consequently, a space below the lamp **11** is illuminated. At the same time, a part of the white light emitted from the pipe **12** is reflected by the side plate section **5***b* of the reflecting member **5** and illuminates a space further on the upper side than the lamp **11**.

[0103] The mounting pad **26** of the light-emitting module **15** included in the lamp **11** forming such a light source of illumination is formed in a part of the wiring pattern **25**, the surface of which is made of silver. Consequently, the mounting pads **26** on which the light-emitting elements **45** are respectively mounted function as reflection surfaces of light.

[0104] At the same time, the sealing member **54** that buries the mounting pad **26**, the light-emitting element **45**, the wire connecting unit **27**, the first wire **51**, and the like and seals the same is formed of resin-based silicone resin. A crosslinked structure of the resin-based silicone resin is three-dimensional. Therefore, compared with silicone oil and silicone rubber, performance for transmitting gasses such as oxygen, water vapor, and the like is low. Incidentally, the oxygen permeability of the sealing member **54** is equal to or lower than 1200 cm^3 (m^2·day·atm) and the water vapor permeability of the sealing member **54** is equal to or lower than 35 g/m^2. The water vapor permeability is preferably equal to or lower than 20 g/m^2.

[0105] The mounting pad **26**, the surface of which is the reflection layer of silver, is sealed by the resin-based silicone resin having the low gas permeability in this way. Consequently, deterioration in reflection performance due to discoloration of the mounting pad **26** caused by transmission of gas in the atmosphere through the sealing member **54** is suppressed. Therefore, it is possible to improve a luminous flux maintenance factor.

[0106] Incidentally, a luminous flux maintenance factor of the conventionally provided straight tube type LED lamp is about 70% in 40,000 hours. Compared with this, it has been confirmed by a test of the inventor that the lamp **11** in the first embodiment can improve the luminous flux maintenance factor to 94% in 40,000 hours.

[0107] Incidentally, the sealing member **54** expands and contracts every time lighting and extinguishing of the lamp **11** are repeated. According to the expansion and contraction, stress is applied to the first wire **51** buried by the sealing member **54**. On the other hand, the resin-based silicone resin has high hardness compared with silicone rubber. If the hardness of the sealing member **54** is high, the stress applied to the first wire **51** increases as the projection height h of the first wire **51** with respect to the light-emitting element **45** is higher.

[0108] However, the first wire **51** is wired to form the low wiring loop. That is, the intermediate portion **51***c* of the first wire **51** is formed to be bent from the one end **51***a* of the first wire **51** connected to the light-emitting element **45** to be parallel to the light-emitting element **45**. At the same time, the projection height h of the intermediate portion **51***c* with respect to the light-emitting element **45** is equal to or larger than 75 μm and equal to or smaller than 125 μm. In this way, the first wire **51** extending over the light-emitting element **45** and the wire connecting unit **27** is wired with the height thereof specified low.

[0109] Consequently, it is possible to reduce the stress applied to the first wire **51** according to the expansion and contraction of the sealing member **54**. Therefore, the first wire **51** is suppressed from being cut in a connecting section of the one end **51***a* of the first wire **51** and the light-emitting element according to a heat cycle based on the lighting and extinguishing of the lamp **11**.

[0110] As explained above, with the lamp **11** in the first embodiment, it is possible to improve the luminous flux maintenance factor while suppressing disconnection of the first wire **51** connected to the light-emitting element **45**.

[0111] Further, the phosphor **54***b* is mixed in the sealing member **54** included in the lamp **11** in the first embodiment. At the same time, the aspect ratio (H/D) representing a relation between the height H of the heap of the sealing member **54** based on the light-emitting element **45** and the diameter D of the bottom surface of the sealing member **54** is specified to 0.22 to 1.00. According to such specification of the aspect ratio, it is possible to secure a distance equal to or larger than 1 mm as the distance from the light-emitting element **45** to the positions on the surface of the sealing member **54**.

[0112] Consequently, an angular color difference is suppressed and it is possible to suppress color unevenness of parts such as the pipe **12** irradiated by light emitted from the sealing member **54** and the sideplate section **5***b* of the reflecting member **5** irradiated by the light transmitted through the pipe **12**. In other words, it is possible to suppress a region irradiated in a bluish color by intense light of the light-emitting element **45** and a region irradiated in a yellowish color by intense light emitted from the phosphor **54***b* from being mixed to be conspicuous.

[0113] Moreover, in the first embodiment, the hardness after formation of the sealing member **54** is specified to be equal to or higher than 54 and equal to or lower than 94 in Shore hardness. Consequently, it is possible to suppress the angular color difference.

[0114] That is, since the sealing member **54** contains the filler **54***c*, the hardness of the sealing member **54** increases and thixotropy in the unhardened state of the sealing member **54** provided by potting is improved. Therefore, the potted sealing member is suppressed from spreading before being thereafter heated and hardened and decreasing in height H.

[0115] Therefore, the predetermined aspect ratio (H/D) is secured. It is possible to secure a distance equal to or larger than 1 mm as the distance from the light-emitting element **45** to the positions on the surface of the sealing member **54**.

[0116] Note that, on the other hand, if the filler **54***c* is not mixed, the thixotropy is deteriorated. According to the deterioration in the thixotropy, the sealing member **54** easily spreads before being hardened and the height of the sealing member **54** decreases. Therefore, it is difficult to secure a distance equal to or larger than 1 mm as the distance from the light-emitting element **45** to the positions on the surface of the sealing member **54**. If the content of the filler **54***c* is too high, fluidity of the unhardened sealing member is lower than a specified value. Therefore, an appropriate amount of the potting is difficult and it is more likely that a potting failure is caused.

[0117] Further, the grooves **26***a* to **26***d* are formed in the peripheral portion of the mounting pad **26** included in the lamp in the first embodiment. The filled parts **42** of the pro-

tection member **41** filled in the grooves **26***a* to **26***d* are covered with the sealing member **54** and bonded to the sealing member **54**. At the same time, the peripheral portion of the sealing member **54** is bonded to the protection member **41**.

[0118] In the first embodiment, adhesiveness of the sealing member **54** made of silicone resin and the surface made of silver of the mounting pad **26** covered with the sealing member **54** is inferior to adhesiveness of resins. Therefore, if the diameter D of the sealing member **54** is reduced, it is more likely that the sealing member **54** peels off the substrate **21**.

[0119] However, as explained above, the filled parts **42** of the protection member **41** made of resin in the grooves **26***a* to **26***d* of the mounting pad **26** are bonded to the mounting pad **26** made of resin. Consequently, holding performance of the sealing member **54**, which seals the mounting pad **26** and the like, to the substrate **21** is improved.

[0120] Therefore, even if the mounting pad **26** is reduced in diameter, peeling of the mounting pad **26** is suppressed. Therefore, it is possible to reduce an amount of use of the sealing member **54**. At the same time, the sealing member **54** is suitable for, for example, increasing disposing density of the mounting pads **26** and the light-emitting elements **45**.

[0121] Further, in the first embodiment, the pipe **12** made of resin having the diffusive translucency, in which the light-emitting module **15** is housed, diffuses light emitted from the light-emitting module **15** and emits the light to the outside as illumination light. Moreover, the pipe **12** is straight and the caps **13** are respectively attached to the longitudinal direction both ends of the pipe **12**. Therefore, the lamp **11** in the first embodiment can be implemented as a straight tube type lamp, which is a light source.

[0122] Moreover, the translucency of the pipe **12** is equal to or lower than 85% and the disposing pitch of the light-emitting elements **45** is equal to or larger than 5 mm and equal to or smaller than 9 mm.

[0123] If the translucency of the pipe **12** exceeds 85% and light permeability increases, the plurality of light-emitting elements **45** arranged in the longitudinal direction of the substrate **21** further tend to change to light dots to be reflected on the pipe **12**. If the disposing pitch of the light-emitting elements **45** is smaller than 5 mm, according to the disposing pitch, the light-emitting elements **45** are arranged at high density along the longitudinal direction of the substrate **21**. Therefore, the light-emitting elements **45** are a main cause of an increase in costs. Conversely, if the disposing pitch of the light-emitting elements **45** exceeds 9 mm, the light-emitting elements **45** are arranged at low density. Therefore, the light-emitting elements **45** further tend to be reflected on the pipe **12**.

[0124] Therefore, in the first embodiment in which the diffusive translucency of the pipe **12** and the disposing pitch of the light-emitting elements **45** are specified as explained above, it is possible to suppress, at low costs, the plurality of light-emitting elements **45** from changing to light spots to be reflected on the pipe **12**. At the same time, it is possible to flash the pipe **12** at substantially uniform brightness.

[0125] The first embodiment is configured as explained above. However, embodiments of the present invention are not limited to the first embodiment. For example, in the first embodiment, the light-emitting device is explained as the lamp including the caps. However, the light-emitting device can be implemented as a light-emitting device not including caps.

1. A light-emitting device comprising a light-emitting module,

the light-emitting module including:

a substrate;

a plurality of light-emitting elements made of semiconductor disposed on the substrate; and

a plurality of sealing members containing, as a main component, translucent resin mixed with a phosphor, heaped up from bottom surfaces thereof bonded on the substrate, and each formed to bury a singularity or a plurality of the light-emitting elements, a ratio (H/D) of a diameter D of the bottom surfaces to height H of the heaps of the sealing members being set to 0.22 to 1.0.

2. The device according to claim **1**, wherein the sealing member is resin-based silicone resin and hardness of the sealing member after formation is equal to or higher than 54 and equal to or lower than 94 in Shore hardness.

3. The device according to claim **1**, wherein a wiring pattern is formed on the substrate, the light-emitting element is mounted on a mounting pad formed by apart of the wiring pattern, a wire connecting section adjacent to the mounting pad is formed on the substrate, the light-emitting device includes a wire that connects the mounting pad and the wire connecting section, one end of the wire connected to the light-emitting element is projected in a thickness direction of the light-emitting element to separate from the element, the other end of the wire connected to the wire connecting section is oblique, an intermediate portion of the wire between the one end and the other end is formed to be bent from the one end to be parallel to the light-emitting element, and projection height of the intermediate portion with respect to the light-emitting element is equal to or larger than 75 μm and equal to or smaller than 125 μm.

4. The device according to claim **3**, wherein a protection member made of resin covering the wiring pattern is formed on the substrate, the mounting pad is covered with the sealing member, a groove is formed in at least one part of a peripheral portion of the mounting pad, and a filled part of the protection member filled in the groove is bonded to the sealing member.

5. The device according to claim **1**, further comprising a diffusive translucent pipe in which the light-emitting module is housed.

6. The device according to claim **5**, wherein translucency of the pipe is equal to or lower than 85% and a disposing pitch of the light-emitting elements is equal to or larger than 5 mm and equal to or smaller than 9 mm.

7. A luminaire comprising:

a luminaire main body;

at least a pair of sockets attached to the luminaire main body; and

a straight tube type light-emitting device including a diffusive translucent straight pipe, a light-emitting module formed long in an extending direction of the pipe and housed in the pipe, and caps attached to longitudinal direction both ends of the pipe, the light-emitting device being supported detachably to the sockets, wherein

the light-emitting module including:

a substrate;

a plurality of light-emitting elements made of semiconductor disposed on the substrate; and

a plurality of sealing members containing, as a main component, translucent resin mixed with a phosphor, heaped up from bottom surfaces thereof bonded on

the substrate, and each formed to bury a singularity or a plurality of the light-emitting elements, a ratio (H/D) of a diameter D of the bottom surfaces to height H of the heaps being set to 0.22 to 1.0.

* * * * *