(19) China National Intellectual Property Administration

(12) Patent for Utility Model

(10) Authorization notification number: CN 203036295 U
(45) Authorization notification date: 2013.07.03

(21) Application Number: 201220684246.1
(22) Application Date: 2012.12.12
(73) Patentee: Zhang Jing
(ESM) The same invention and creation has applied for invention patent on the same day
Address: 518109, West Side, 4th Floor, Building 6,
Jiaanda Science and Technology Industry Park,
No. 110, Huafan Road, Dalang Street,
Longhua District, Shenzhen, Guangdong
(72) Inventor: Zhang Jing
(74) Patent Agency: Shenzhen Zhongzhi Patent and Trademark Agency Co., Ltd
Agent: Sun Hao, Lin Hong
(51) Int.CI.
F21S 2/00(2006.01)
F21V 19/00(2006.01)
F21V 29/00(2006.01)
F21V 7/22(2006.01)
F21V 23/00(2006.01)
F21Y 101/02(2006.01)

Claims 2 pages, Specifications 5 pages, Figures 3 page

(54) **Utility Model Name**

LED fluorescent lamp

(57) **Summary**

This Utility Model provides an LED fluorescent lamp. The technical problem to be solved is to reduce the manufacturing cost. It includes a lamp tube and a circuit board arranged in the lamp tube with LED lamp beads. The circuit board is fixedly connected with the inner wall of the lamp tube through a fixed layer in the same way as the circumference curvature of the inner wall of the lamp tube in its width direction. The structure that directly fixes the circuit board onto the inner wall of the lamp tube through the fixing layer omits the metal bracket used to fix the circuit board in the LED fluorescent lamp tube in the prior art, and greatly reduces the manufacturing cost of the LED fluorescent lamp. When the fixing layer uses a bonding layer with good heat conductivity, it can improve the cooling of the fluorescent lamp. This Utility Model also sets reflective film layers on the inner and outer walls of the lamp tube, so that the light emitted from the LED light source to the back of the lamp tube can be fully utilized due to reflection, thereby correspondingly enhancing the luminance of the fluorescent lamp. In addition, a heat sink is added outside the lamp tube to further improve the cooling effect of the lamp tube.

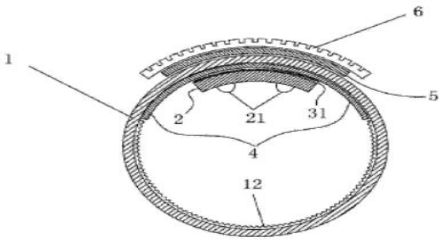

1. An LED fluorescent lamp, which includes a lamp tube (1) and a circuit board (2) arranged in the lamp tube (1) with at least one row of LED lamp beads (21) extending along the axial direction of the lamp tube (1). The LED lamp beads (21) are electrically connected with the external circuit through the circuit board (2), which is characterized in that: The circuit board (2) is fixedly connected with the inner wall of the lamp tube (1) through the fixing layer (3) in the same way as the circumference curvature of the inner wall of the lamp tube (1) in its width direction.
2. The LED fluorescent lamp according to Claim 1 is characterized in that: The fixing layer (3) is a thermally conductive adhesive layer (3).
3. The LED fluorescent lamp according to Claim 2 is characterized in that: The thermally conductive adhesive layer (3) is a thermally conductive adhesive (31), which is silicone, acrylic acid vinegar or epoxy resin.
4. The LED fluorescent lamp according to Claim 2 is characterized in that: The thermally conductive adhesive layer (3) comprises an aluminum foil layer (32), a thin aluminum layer, a copper layer, or a fiber layer doped with thermally conductive adhesive material. The front side of the aluminum foil layer (32), the thin aluminum layer, the copper layer, or the fiber layer doped with thermally conductive adhesive material is bonded with the circuit board (2) through the thermally conductive adhesive (31), and the back side is bonded with the inner wall of the lamp tube (1) through the thermally conductive adhesive (31).
5. The LED fluorescent lamp according to Claim 3 or 4 is characterized in that: An inner reflective film layer (4) is arranged on the inner wall of the lamp tube (1) corresponding to the back of the circuit board (2). The inner reflective film layer (4) is set as a continuous film layer or a discontinuous film layer in the circumference direction of the inner wall of the lamp tube (1). The continuous film layer is from one side of the circuit board (2) to the other side through the back of the circuit board (2), and its length along the circumference direction of the inner wall of the lamp tube (1) is 1/3-1/2 of the circumference of the inner wall of the lamp tube (1); The discontinuous film layer is composed of two sections respectively located on both sides of the circuit board (2). The length of the discontinuous film layer on each side along the circumference direction of the inner wall of the lamp tube (1) is 1/6-1/4 of the inner circumference length.
6. The LED fluorescent lamp according to Claim 5 is characterized in that: The inner wall of the lamp tube (1) without the inner reflective film layer (4) is the inner wall of the frosted layer (12).
7. The LED fluorescent lamp according to Claim 6 is characterized in that: The area corresponding to the circuit board (2) on the outer wall of the lamp tube (1) is equipped with an external reflective film layer (5). The length of the external reflective film layer (5) along the circumference direction of the outer wall of the lamp tube (1) is greater than the length of the circuit board (2) radially projected on the circumference direction of the outer wall of the lamp tube (1), and the

projection is covered. The length of the external reflective film layer (5) along the circumference direction of the outer wall of the lamp tube (1) is 1/4-1/2 of the outer circumference length.

8. The LED fluorescent lamp according to Claim 7 is characterized in that: The external reflective film layer (5) closely attached to the outer wall of the lamp tube (1) is equipped with a heat sink (6).
9. The LED fluorescent lamp according to Claim 7 is characterized in that: The inner reflective film layer (4) and the external reflective film layer (5) are electric coating, spray coating, vacuum coating or aluminum foil layer.
10. The LED fluorescent lamp according to Claim 7 is characterized in that: The circuit board (2) is made of aluminum base PCB, flexible PCB or glass fiber PCB.

LED Fluorescent Lamp

Technical Field

[0001] This Utility Model covers a fluorescent lamp, in particular to an assembly structure of an LED component in a fluorescent lamp tube.

Background Technology

[0002] With the rapid development of science and technology, lighting devices mainly based on LED light sources, which have the advantages of energy saving, environmental protection, high brightness and long life, are increasingly favored by consumers.

[0003] As shown in Figure 1, the LED fluorescent lamp in the prior art is composed of a glass lamp tube 1, a light emitting component arranged in the lamp tube 1, and a plug with a driver electrically connected to the light emitting component at both ends of the lamp tube. The light emitting component includes a bracket 11 made of aluminum profiles extending from one end of the lamp tube to the other end, and a circuit board 2 fixed on the bracket, which extends along the axis of the lamp tube and is equipped with LED lamp beads 21. The cross-sectional shape of the bracket 11 is an arch less than a semicircle, the arc part of the arch is connected with the inner wall of the lamp tube 1, and the chord part faces the center of the lamp tube 1. The circuit board 2 with LED lamp beads 21 is fixed on the surface of the chord part in the way of facing the center. This structure has the following shortcomings:

[0004] 1) Each fluorescent lamp needs to be equipped with a bracket with the same length as the lamp tube, so the manufacturing cost is high.

[0005] 2) Due to the barrier of the bracket, when the LED light source in the enclosed space inside the lamp tube works, the heat generated is transferred to the bracket through the circuit board, and then transferred from the bracket to the external space through the glass wall of the lamp tube. In this way, the heat resistance will be larger through two heat conduction exchange layers.

Invention Content

[0006] This Utility Model aims to provide an LED fluorescent lamp. The technical problem to be solved is to reduce the manufacturing cost.

[0007] To solve the above technical problem, the technical solution used by the Utility Model is as follows:

[0008] The LED fluorescent lamp of the Utility Model includes a lamp tube and a circuit board arranged in the lamp tube with at least one row of LED lamp beads extending along the axial direction of the lamp tube. The LED lamp beads are electrically connected with the external circuit through the circuit board. The circuit board is fixedly connected with the inner wall of the lamp tube through the fixing layer in the same way as the circumference curvature of the inner wall of the lamp tube in its width direction.

[0009] The fixing layer is a thermally conductive adhesive layer.

[0010] The thermally conductive adhesive layer is a thermally conductive adhesive (31), which is silicone, acrylic acid vinegar or epoxy resin.

[0011] The thermally conductive adhesive layer comprises an aluminum foil layer, a thin aluminum layer, a copper layer, or a fiber layer doped with thermally conductive adhesive material. The front side of the aluminum foil layer, the thin aluminum layer, the copper layer, or the fiber layer doped with thermally conductive adhesive material is bonded with the circuit board through the thermally conductive adhesive, and the back side is bonded with the inner wall of the lamp tube through the thermally conductive adhesive.
[0012] An inner reflective film layer is arranged on the inner wall of the lamp tube corresponding to the back of the circuit board. The inner reflective film layer is set as a continuous film layer or a discontinuous film layer in the circumference direction of the inner wall of the lamp tube. The continuous film layer is from one side of the circuit board to the other side through the back of the circuit board, and its length along the circumference direction of the inner wall of the lamp tube is 1/3-1/2 of the circumference of the inner wall of the lamp tube; The discontinuous film layer is composed of two sections respectively located on both sides of the circuit board. The length of the discontinuous film layer on each side along the circumference direction of the inner wall of the lamp tube is 1/6-1/4 of the inner circumference length.
[0013] The inner wall of the lamp tube without the inner reflective film layer is the inner wall of the frosted layer.
[0014] The area corresponding to the circuit board on the outer wall of the lamp tube is equipped with an external reflective film layer. The length of the external reflective film layer along the circumference direction of the outer wall of the lamp tube is greater than the length of the circuit board radially projected on the circumference direction of the outer wall of the lamp tube, and the projection is covered. The length of the external reflective film layer along the circumference direction of the outer wall of the lamp tube is 1/4-1/2 of the outer circumference length.
[0015] The external reflective film layer closely attached to the outer wall of the lamp tube is equipped with a heat sink.
[0016] The inner and external reflective film layer are electric coating, spray coating, vacuum coating or aluminum foil layer.
[0017] The circuit board is made of aluminum base PCB, flexible PCB or glass fiber PCB.
[0018] Compared with the prior art, the LED fluorescent lamp of the Utility Model uses the structure that directly fixes the LED circuit board with the same curvature as the inner wall of the lamp tube onto the inner wall of the lamp tube through the fixing layer. This omits the metal bracket used to fix the LED circuit board in the LED fluorescent lamp tube in the prior art, and greatly reduces the manufacturing cost of the LED fluorescent lamp. When the fixing layer uses a bonding layer with good heat conductivity, it can improve the cooling of the LED fluorescent lamp. This Utility Model sets reflective film layers on the inner and outer walls of the lamp tube, so that the light emitted from the LED light source to the back of the lamp tube can be fully utilized due to reflection, thereby correspondingly enhancing the luminance of the LED fluorescent lamp. In addition, a heat sink is added outside the lamp tube to further improve the cooling effect of the lamp tube.

Figures Description

[0019] Figure 1 is the sectional diagram of the LED fluorescent lamp in the prior art.

[0020] Figure 2 is the sectional diagram of Example 1 of the LED fluorescent lamp of the Utility Model.

[0021] Figure 3 is the sectional diagram of Example 2 of the LED fluorescent lamp of the Utility Model.

[0022] Figure 4 is the sectional diagram of Example 3 of the LED fluorescent lamp of the Utility Model.

[0023] Figure 5 is the sectional diagram of Example 4 of the LED fluorescent lamp of the Utility Model.

[0024] Figure 6 is the axial sectional diagram of the LED horizontal insertion lamp with single end plug.

Specific Enforcement Mode

[0025] The Utility Model will be further described below with the figures and specific examples.

[0026] The marks on the figures of this Utility Model are as follows: lamp tube 1, bracket in the lamp 11, frosted layer 12, circuit board 2, LED lamp beads 21, fixing layer 3, thermally conductive adhesive 31, thin aluminum layer 32, inner reflective film layer 4, external reflective film layer 5, heat sink 6, LED horizontal insertion lamp 7.

[0027] As shown in Figure 2, 3, 4 and 5, the LED fluorescent lamp of the Utility Model is composed of a lamp tube 1 with a circular section and glass material, a circuit board 2 arranged in the lamp tube 1 extending along the axis, and a plug with a driver arranged on both ends of the lamp tube 1 and electrically connecting the circuit board 2 with the external power supply (Or one end is an open end, the other end is a closed LED horizontal insertion lamp 7, that is, the circuit board is installed into the lamp tube through the open end of the horizontal insertion lamp tube, and then the plug with the driver electrically connected to the external power supply is blocked on the open end, as shown in Figure 6). The sectional shape of the lamp tube 1 may also be triangle to enneagon. The inner wall of lamp tube 1 can be a smooth inner wall without rough surface treatment (rough surface treatment refers to the treatment of sanding or spraying the inner wall of the lamp tube to make the light emitted by the lamp tube diffuse evenly and softly), or an inner wall with all or part of the rough surface treatment (the rough surface treated inner wall is called sanding layer 12). The circuit board 2 is made of aluminum-based printed circuit board PCB, flexible PCB or glass fiber PCB, on which one to three rows of light strips composed of LED lamp beads 21 are welded. The LED lamp beads 21 are electrically connected with the external circuit through the circuit board 2.

[0028] The circuit board 2 extends from one end of the lamp tube 1 to the other end. When the circuit board 2 is made of aluminum-based PCB or glass fiber PCB, its back (the side on which the LED lamp beads 21 are arranged is front side, and the other side is back side) can be made into arc shape, and its width direction is the same as the circumference curvature of the inner wall of the lamp tube 1. The back side of the circuit

board 2 is bonded to one side of the fixing layer 3, and the other side of the fixing layer 3 is bonded to the inner wall of the lamp tube 1. Then the circuit board 2 is fixedly connected with the inner wall of the lamp tube 1; Similarly, when the circuit board 2 is made of flexible PCB, the circuit board 2 can be fixedly connected with the inner wall of the lamp tube 1 through the fixing layer 3. This structure can fix the circuit board 2 onto the inner wall of the lamp tube 1 without using the tube bracket, thereby greatly reducing the manufacturing cost of the LED fluorescent lamp.

[0029] During the operation of LED fluorescent lamp, LED light source will emit more heat. Because the lamp tube 1 is a closed space, cooling is also a nonnegligible problem. In order to solve this problem, the fixing layer 3 of the Utility Model uses a thermally conductive adhesive layer 3, which can transmit the heat energy generated by the LED light source to the wall of the lamp tube 1 through the thermally conductive adhesive layer 3, and then release it to the external space from the wall of the lamp tube 1. The structure can dissipate the heat energy in the tube in a short time. The thermally conductive adhesive layer 3 has following two modes:

[0030] 1) The thermally conductive adhesive layer 3 is made of thermally conductive adhesive 31, which can be a silicone, acrylic acid vinegar or epoxy resin glue with heat conductivity.

[0031] 2) The thermally conductive adhesive layer 3 is composed of an aluminum foil layer 32, a thin aluminum layer (the thickness of the thin aluminum layer does not exceed 2mm), a copper layer, a fiber layer doped with thermally conductive adhesive material or a thin thermally conductive carrier, and a thermally conductive adhesive. When using, the front side of the aluminum foil layer 32, thin aluminum layer, copper layer, fiber layer doped with thermally conductive adhesive material or thin thermally conductive carrier can be bonded with the back side of the circuit board 2 through thermally conductive adhesive. Then the back side of the aluminum foil layer 32, thin aluminum layer, copper layer, fiber layer doped with thermally conductive adhesive material or thin thermally conductive carrier can be bonded with the inner wall of the lamp tube 1 through thermally conductive adhesive.

[0032] The further improvement of the Utility Model is that the inner wall of the lamp tube 1 corresponding to the back of the circuit board 2 is coated with a film that can reflect light by electroplating, spraying or vacuum coating. An aluminum foil layer can also be pasted, hereinafter referred to as inner reflective film layer 4. The inner reflective film layer 4 can be either a metal film layer or a PVC reflective film layer made by a new process in the prior art. It has two settings in the circumference direction of the inner wall of the lamp tube 1, that is continuous film layer or discontinuous film layer respectively.

[0033] The continuous film layer is from one side of the circuit board 2 to the other side through the back of the circuit board 2, and its length along the circumference direction of the inner wall of the lamp tube 1 is 1/3-1/2 of the circumference of the inner wall of the lamp tube 1;

[0034] The discontinuous film layer is composed of two sections respectively located on both sides of the circuit board 2. One side of the discontinuous film layer on each side is

connected with the corresponding side of circuit board 2, and the other side extends to the light passing part of lamp tube 1. Its length along the circumference direction of the inner wall of the lamp tube 1 is 1/6-1/4 of the inner circumference length. The specific length can be determined according to the special use of LED fluorescent lamps. For example, when consumers need a small light emission angle, the length of the inner reflective film layer 4 can be longer.

[0035] On the inner wall of the lamp tube 1, the area without inner reflective film layer can be the inner wall of the frosted layer.

[0036] The further improvement is that on the outer wall of the lamp tube 1, which is located in the outer wall area corresponding to the circuit board 2, we set a film layer that can further make the light fully reflected by electroplating, spraying or vacuum coating, hereinafter referred to as the external reflective film layer 5. The length of the external reflective film layer 5 along the circumference direction of the outer wall of the lamp tube 1 is greater than the length of the circuit board 2 radially projected on the outer wall of the lamp tube 1, and the projection must be covered. The length of the external reflective film layer 5 along the circumference direction of the outer wall of the lamp tube 1 is 1/4-1/2 of the outer circumference length.

[0037] Another improvement of the Utility Model is that on the outer wall of the lamp tube 1, a heat sink 6 is arranged at the back of the circuit board 2. The setting method can be close to the external reflective film layer 5, or close to the outer wall of the lamp tube without the external reflective film layer 5. The length of the heat sink 6 in the circumference direction of the outer wall of the lamp tube 1 can be greater or less than the length of the external reflective film layer 5, but it must be greater than the projection length of the circuit board 2 on the outer wall of the lamp tube 1, so that the heat energy generated by the light source in the tube can be further distributed to the atmosphere more quickly.

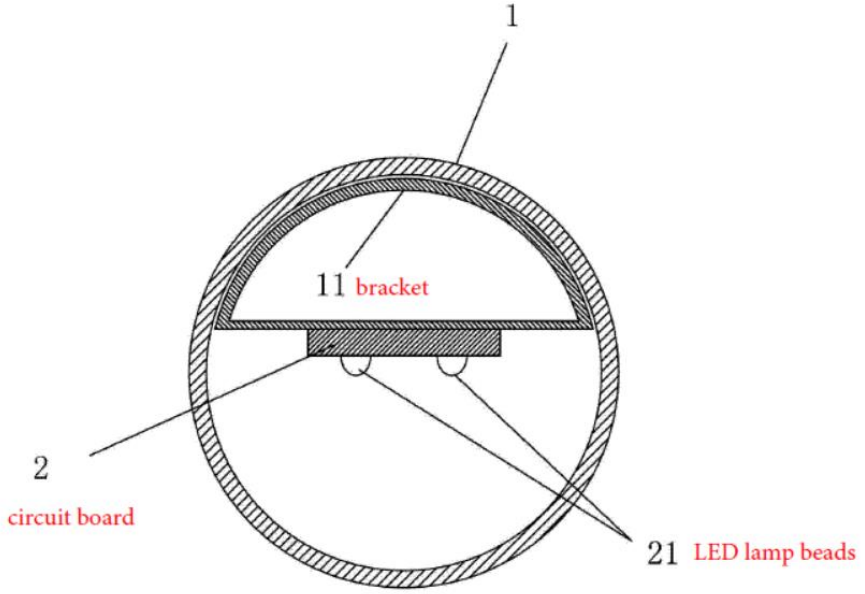

图 1 (Prior Art)

Figure 1 (Prior Art)

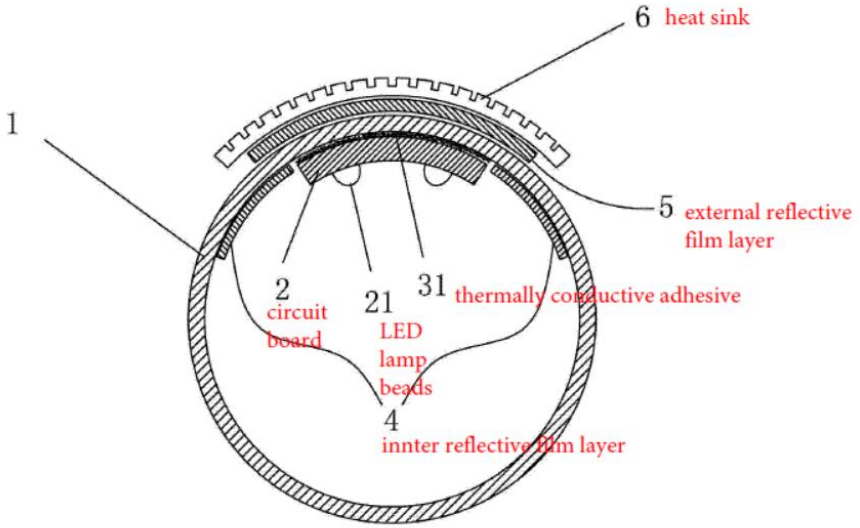

Figure 2

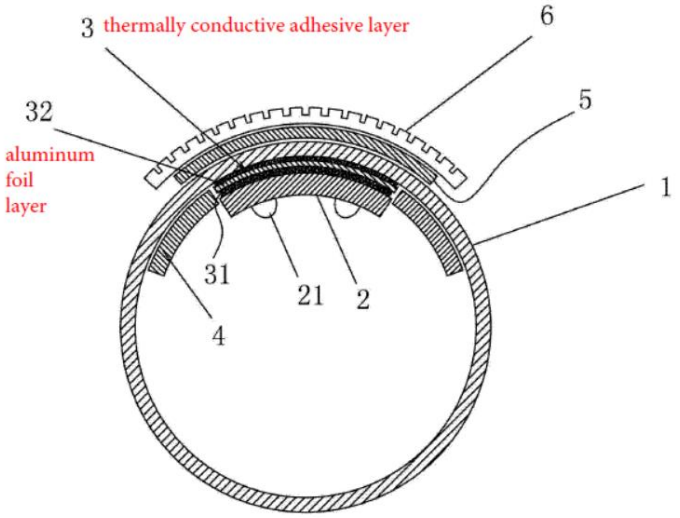

Figure 3

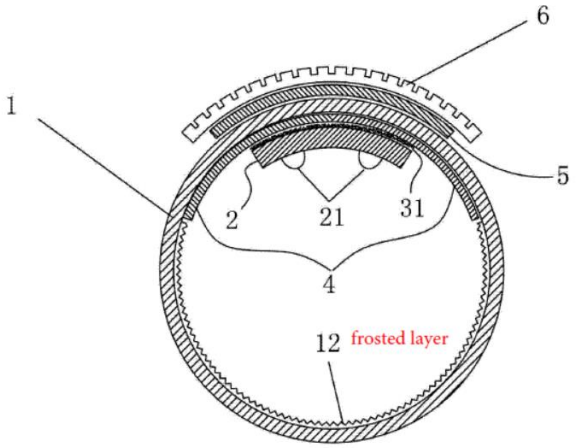

Figure 4

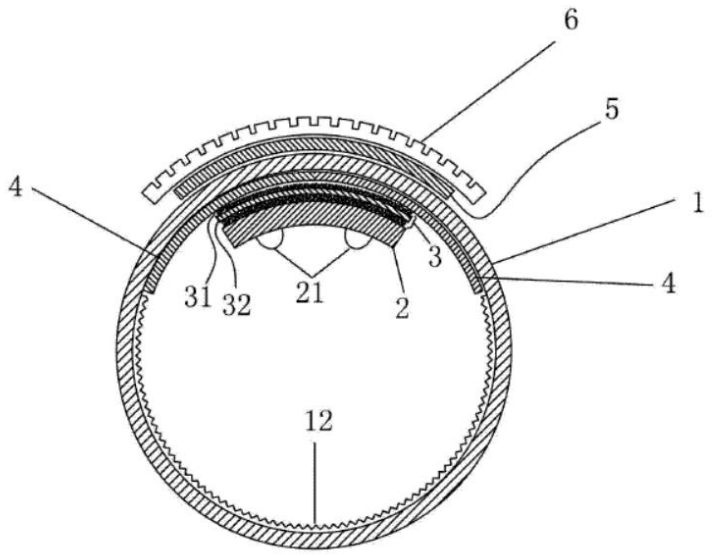

Figure 5

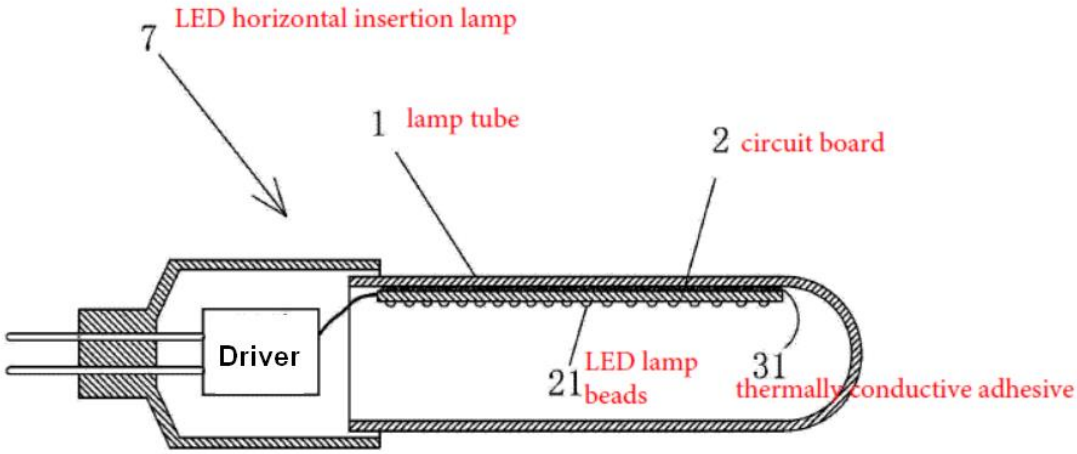

Figure 6

TRANSLATION CERTIFICATION

Date: December 12, 2022

To whom it may concern:

This is to certify that the attached translation is an accurate representation of the document received by this office. The translation was completed from:

- **Chinese**

To:

- **English**

The document is designated as:

CN203036295U-Original document

Andrea Santos, Project Coordinator in this company, attests to the following:

"To the best of my knowledge, the aforementioned document is a true, full and accurate translation of the specified document."

Signature of Andrea Santos

(19)中华人民共和国国家知识产权局

(12)实用新型专利

(10)授权公告号 CN 203036295 U
(45)授权公告日 2013.07.03

(21)申请号 201220684246.1
(22)申请日 2012.12.12
(73)专利权人 张静
地址 518109 广东省深圳市龙华区大浪街道华繁路110号嘉安达科技工业园6栋4楼西侧
(72)发明人 张静
(74)专利代理机构 深圳市中知专利商标代理有限公司 44101
代理人 孙皓 林虹
(51)Int.Cl.
F21S 2/00(2006.01)
F21V 19/00(2006.01)
F21V 29/00(2006.01)
F21V 7/22(2006.01)
F21V 23/00(2006.01)
F21Y 101/02(2006.01)

(ESM)同样的发明创造已同日申请发明专利

权利要求书1页 说明书3页 附图3页

(54)实用新型名称

发光二极管日光灯

(57)摘要

本实用新型公开了一种发光二极管日光灯LED,要解决的技术问题是降低制造成本。其包括灯管及置于灯管内的具有LED灯珠的电路板条,电路板条在其宽度方向上以与灯管内壁周向曲率相同的方式通过固定层与灯管内壁固定连接。将电路板条通过固定层直接固定在灯管内壁上的结构,省略了现有技术中在LED日光灯管内用以固定电路板条的金属支架,大大降低了LED日光灯的制造成本,当固定层使用导热良好的粘接层时,又可提高该日光灯的散热性;本实用新型还在灯管内、外壁设置反光膜层使LED光源向灯管背部发出的光线均因反射而被充分利用,由此,又相应的增强了该日光灯的发光亮度,另外,在管外增设散热片,又进一步提高了灯管的散热效果。

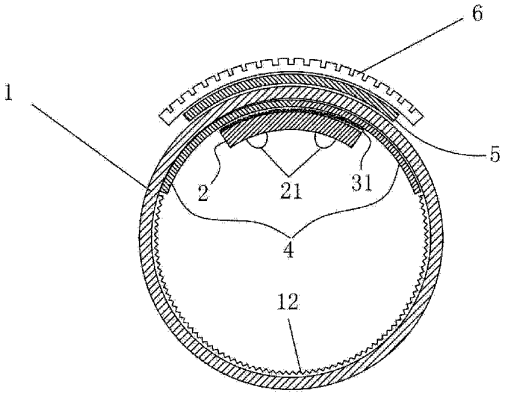

CN 203036295 U

1. 一种发光二极管日光灯，包括灯管（1）及置于灯管（1）内的具有至少一排 LED 灯珠（21）的沿灯管（1）轴向延伸的电路板条（2），所述 LED 灯珠（21）通过电路板条（2）与外部电路电连接，其特征在于：所述电路板条（2）在其宽度方向上以与灯管（1）内壁周向曲率相同的方式通过固定层（3）与灯管（1）内壁固定连接。

2. 根据权利要求 1 所述的发光二极管日光灯，其特征在于：所述固定层（3）为导热粘接层（3）。

3. 根据权利要求 2 所述的发光二极管日光灯，其特征在于：所述导热粘接层（3）为导热胶（31），其为硅硐类、丙烯酸酯类或环氧树脂类。

4. 根据权利要求 2 所述的发光二极管日光灯，其特征在于：所述导热粘接层（3）包括铝箔层（32）、薄铝层、铜皮层或掺有导热胶材料的纤维层，所述铝箔层（32）、薄铝层、铜皮层或掺有导热胶材料的纤维层正面通过导热胶（31）与电路板条（2）粘接，其背面通过导热胶（31）与灯管（1）内壁粘接。

5. 根据权利要求 3 或 4 所述的发光二极管日光灯，其特征在于：在位于所述电路板条（2）背面对应的灯管（1）内壁上设有内反光膜层（4），该内反光膜层（4）在灯管（1）内壁圆周方向上设为连续膜层或间断膜层，所述连续膜层为由所述电路板条（2）的一侧经电路板条（2）的背面至其另一侧，其沿灯管（1）内壁圆周方向的长度为灯管（1）内壁圆周长的 1/3—1/2；所述间断膜层为两段分别位于所述电路板条（2）的两侧，每侧的间断膜层沿灯管（1）内壁圆周方向的长度为内圆周长度的 1\6—1\4。

6. 根据权利要求 5 所述的发光二极管日光灯，其特征在于：未设有内反光膜层（4）的灯管（1）内壁为磨砂层（12）的内壁。

7. 根据权利要求 6 所述的发光二极管日光灯，其特征在于：在所述灯管（1）外壁上与所述电路板条（2）对应的区域设有外反光膜层（5），该外反光膜层（5）沿灯管（1）外壁圆周方向的长度大于所述电路板条（2）沿径向投影在灯管（1）外壁圆周方向上的长度并将该投影覆盖，该外反光膜层（5）沿灯管（1）外壁圆周方向的长度为外圆周长度的 1\4—1/2。

8. 根据权利要求 7 所述的发光二极管日光灯，其特征在于：在所述灯管（1）外壁上紧贴所述外反光膜层（5）设有散热片（6）。

9. 根据权利要求 7 所述的发光二极管日光灯，其特征在于：所述内反光膜层（4）、外反光膜层（5）为电镀层、喷涂层、真空镀层或铝箔层。

10. 根据权利要求 7 所述的发光二极管日光灯，其特征在于：所述电路板条（2）由铝基 PCB、柔性 PCB 或玻纤 PCB 制成。

发光二极管日光灯

技术领域

[0001] 本实用新型涉及一种日光灯，特别涉及一种发光二极管组件在日光灯管内的装配结构。

背景技术

[0002] 随着科学技术的快速发展，具有节能、环保、高亮和寿命长等优点的以发光二极管 LED 发光源为主的照明器件越来越受到消费者的喜爱。

[0003] 如图 1 所示，现有技术中的 LED 日光灯是由玻璃灯管 1、设置于灯管 1 内的发光组件和灯管两端的与所述发光组件电连接的设有驱动器的堵头构成。发光组件包括由铝型材制作的从灯管一端延至另一端的支架 11、固定在该支架上的沿灯管轴向延伸的装有 LED 灯珠 21 的电路板条 2。所述支架 11 横截面形状为小于半圆的弓形，该弓形的弧形部分与灯管 1 内壁相接，其弦形部分面向灯管 1 圆心，所述装有 LED 灯珠 21 的电路板条 2 朝向圆心的方式固定于该弦形部分的表面。该结构存在以下不足：

[0004] 1）每根日光灯需配置一根与灯管长度相当的支架，制造成本较高。

[0005] 2）由于支架的阻隔，处于灯管内封闭空间的 LED 发光光源在工作时，所产生的热量散热途径是经电路板传至支架，再由支架传至并通过灯管玻璃壁散发于外部空间，这样的散热方式，经过 2 个热传导交换层，热阻较大。

发明内容

[0006] 本实用新型的目的是提供一种发光二极管日光灯，要解决的技术问题是降低制造成本。

[0007] 为了解决上述技术问题，本实用新型采用的技术方案为：

[0008] 本实用新型的发光二极管日光灯，包括灯管及置于灯管内的具有至少一排 LED 灯珠的沿灯管轴向延伸的电路板条，所述 LED 灯珠通过电路板条与外部电路电连接，所述电路板条在其宽度方向上以与灯管内壁周向曲率相同的方式通过固定层与灯管内壁固定连接。

[0009] 所述固定层为导热粘接层。

[0010] 所述导热粘接层为导热胶，其为硅硐类、丙烯酸酯类或环氧树脂类。

[0011] 所述导热粘接层包括铝箔层、薄铝层、铜皮层或掺有导热胶材料的纤维层，所述铝箔层、薄铝层、铜皮层或掺有导热胶材料的纤维层正面通过导热胶与电路板条粘接，其背面通过导热胶与灯管内壁粘接。

[0012] 在位于所述电路板条背面对应的灯管内壁上设有内反光膜层，该内反光膜层在灯管内壁圆周方向上设为连续膜层或间断膜层，所述连续膜层为由所述电路板条的一侧经电路板条的背面至其另一侧，其沿灯管内壁圆周方向的长度为灯管内壁圆周长的 1/3—1/2；所述间断膜层为两段分别位于所述电路板条的两侧，每侧的间断膜层沿灯管内壁圆周方向的长度为内圆周长度的 1\6—1\4。

[0013] 未设有内反光膜层的灯管内壁为磨砂层的内壁。

[0014] 在所述灯管外壁上与所述电路板条对应的区域设有外反光膜层，该外反光膜层沿灯管外壁圆周方向的长度大于所述电路板条沿径向投影在灯管外壁圆周方向上的长度并将该投影覆盖，该外反光膜层沿灯管外壁圆周方向的长度为外圆周长度的 1\4—1/2。

[0015] 在所述灯管外壁上紧贴所述外反光膜层设有散热片。

[0016] 所述内反光膜层、外反光膜层为电镀层、喷涂层、真空镀层或铝箔层。

[0017] 所述电路板条由铝基 PCB、柔性 PCB 或玻纤 PCB 制成。

[0018] 与现有技术相比，本实用新型的 LED 日光灯采用将与灯管内壁相同曲率的 LED 电路板条通过固定层直接将该电路板条固定在灯管内壁上的结构，省略了现有技术中在 LED 日光灯管内用以固定 LED 电路板条的金属支架，大大降低了 LED 日光灯的制造成本，当所述固定层使用导热良好的粘接层时，又可以有效提高 LED 日光灯的散热性；本实用新型通过在灯管内、外壁设置反光膜层使 LED 光源向灯管背部发出的光线均因反射而被充分利用，由此，又相应的增强了 LED 日光灯的发光亮度，另外，在管外增设散热片，又进一步提高了灯管的散热效果。

附图说明

[0019] 图 1 为现有技术中的 LED 日光灯截面示意图。

[0020] 图 2 为本实用新型的 LED 日光灯实施例一截面示意图。

[0021] 图 3 为本实用新型的 LED 日光灯实施例二截面示意图。

[0022] 图 4 为本实用新型的 LED 日光灯实施例三截面示意图。

[0023] 图 5 为本实用新型的 LED 日光灯实施例四截面示意图。

[0024] 图 6 为单端堵头的 LED 横插灯轴向截面示意图。

具体实施方式

[0025] 下面结合附图和具体实施例对本实用新型作进一步详细说明。

[0026] 本实用新型的附图标记如下：灯管 1、灯内支架 11、磨砂层 12、电路板条 2、LED 灯珠 21、固定层 3、导热胶 31、铝箔层 32、内反光膜层 4、外反光膜层 5、散热片 6、LED 横插灯 7。

[0027] 如图 2、图 3、图 4 和图 5 所示，本实用新型的 LED 日光灯是由截面形状为圆形、材料为玻璃的灯管 1，置于灯管 1 内的沿轴向延伸的电路板条 2 和设置于灯管 1 两端并将电路板条 2 与外部电源电连接的其上设有驱动器的堵头构成（也可以是一端为开口另一端为封闭的 LED 横插灯 7，即所述电路板条由该横插灯管的开口端装入灯管内，再将装有与外部电源电连接的驱动器的堵头封堵于所述开口端，如图 6 所示）。灯管 1 的截面形状也可以为三至九边形。灯管 1 的内壁可以是没有毛面处理（毛面处理是对灯管内壁采用磨砂或喷涂工艺进行的处理，目的是让由灯管发出的光扩散均匀和柔和）的光滑内壁，也可以是全部或部分经毛面处理的内壁（将毛面处理过的内壁简称为磨砂层 12），所述电路板条 2 由铝基印制电路板 PCB、柔性 PCB 或玻纤 PCB 制成，其上焊接有一至三排由 LED 灯珠 21 构成的灯条，LED 灯珠 21 通过电路板条 2 与外部电路电连接。

[0028] 所述电路板条 2 由灯管 1 的一端伸向另一端，当电路板条 2 为铝基 PCB 或玻纤 PCB 时，可将其背面（其上设有 LED 灯珠 21 的一面为正面，另一面为背面）制作成弧形状，在其

宽度方向上与灯管 1 内壁圆周曲率相同，将电路板条 2 的背面与固定层 3 一面粘接，再将固定层 3 的另一面粘接在灯管 1 内壁上，从而将该电路板条 2 与灯管 1 内壁固定连接在一起；同理，当电路板条 2 为柔性 PCB 时，可直接通过固定层 3 将该电路板条 2 与灯管 1 内壁固定连接在一起。该结构可在不使用管内支架的情况下，将电路板条 2 固定在灯管 1 内壁上，由此，可大大降低 LED 日光灯的制造成本。

[0029] 在 LED 日光灯工作过程中，LED 光源会发出较多的热量，由于灯管 1 内为一封闭空间，因而，散热也是一个不可忽视的问题，本实用新型为了解决该问题，固定层 3 采用导热粘接层 3，由此，可将 LED 光源产生的热能通过该导热粘接层 3 传导给灯管 1 壁，再由灯管 1 壁释放于外部空间，该结构可在较短的时间内将管内热量散发出去，所述导热粘接层 3 有以下两种方式：

[0030] 1)所述导热粘接层 3 为导热胶 31，该导热胶 31 可为硅硐类、丙烯酸酯类或环氧树脂类等具有导热性能的粘接胶。

[0031] 2) 所述导热粘接层 3 为由铝箔层 32、薄铝层(该薄铝层的厚度不超过 2mm)、铜皮层、掺有导热胶材料的纤维层或轻薄的导热载体，与导热粘接剂组成，使用时，可将所述铝箔层 32、薄铝层、铜皮层、掺有导热胶材料的纤维层或轻薄的导热载体的正面通过导热粘接剂与电路板条 2 的背面粘接，再将该铝箔层 32、薄铝层、铜皮层、掺有导热胶材料的纤维层或轻薄的导热载体的背面通过导热粘接剂与灯管 1 内壁粘接。

[0032] 本实用新型的进一步改进是在位于所述电路板条 2 背面对应的灯管 1 内壁上，采用电镀、喷涂或真空镀膜的方法涂有可使光线反射的膜层，也可以粘贴一层铝箔层，以下称内反光膜层 4，该内反光膜层 4 可以为金属膜层，也可以为现有技术中新工艺制作的 PVC 反光膜层，其在灯管 1 内壁圆周方向上有两种设置，分别为连续膜层或间断膜层。

[0033] 所述连续膜层为由所述电路板条 2 的一侧经电路板条 2 的背面延至其另一侧，其沿灯管 1 内壁圆周方向的长度为灯管 1 内壁圆周长的 1/3—1/2；

[0034] 所述间断膜层为两段分别位于所述电路板条 2 的两侧，每侧的间断膜层的一边与电路板条 2 相应侧边相接，另一边向灯管 1 通光部分延伸，其在灯管 1 内壁圆周方向上的长度为内圆周长度的 1\6—1\4，具体长度可根据 LED 日光灯选择的特殊用途而定，例如，当消费者需要发光角度较小时，就可将内反光膜层 4 的长度做长些。

[0035] 在灯管 1 内壁上未设有内反光膜层的区域可为磨砂层的内壁。

[0036] 进一步的改进是在所述灯管 1 的外壁上，位于所述电路板条 2 对应的外壁区域，采用电镀、喷涂或真空镀膜方法设置可进一步使光线全反射的膜层，以下称外反光膜层 5，该外反光膜层 5 在灯管 1 外壁圆周方向上的长度要大于电路板条 2 沿径向投射在灯管 1 外壁上的投影的长度，并且要将该投影覆盖。该外反光膜层 5 沿灯管 1 外壁圆周方向的长度为外圆周长度的 1\4—1\2。

[0037] 作为本实用新型的又一改进是在灯管 1 外壁上位于所述电路板条 2 的背面位置设置散热片 6，其设置方法可紧贴所述外反光膜层 5 设置，也可以在未设外反光膜层 5 的情况下紧贴灯管外壁设置。所述散热片 6 在灯管 1 外壁圆周方向上的长度可以大于所述的外反光膜层 5 的长度，也可小于所述外反光膜层 5 的长度，但一定要大于所述电路板条 2 在灯管 1 外壁上的投影长度，这样可进一步将管内光源产生的热量更快速的散发于大气之中。

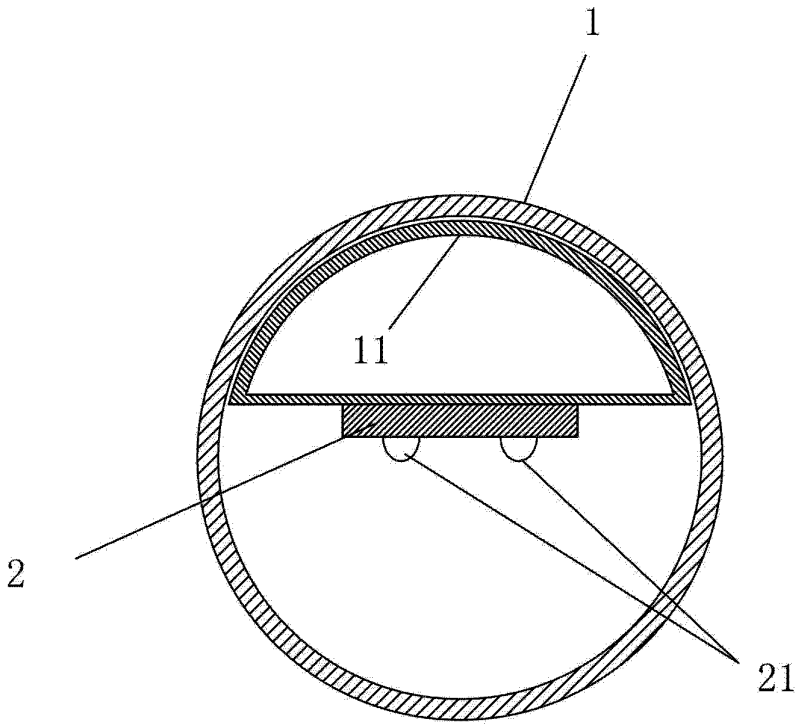

图 1

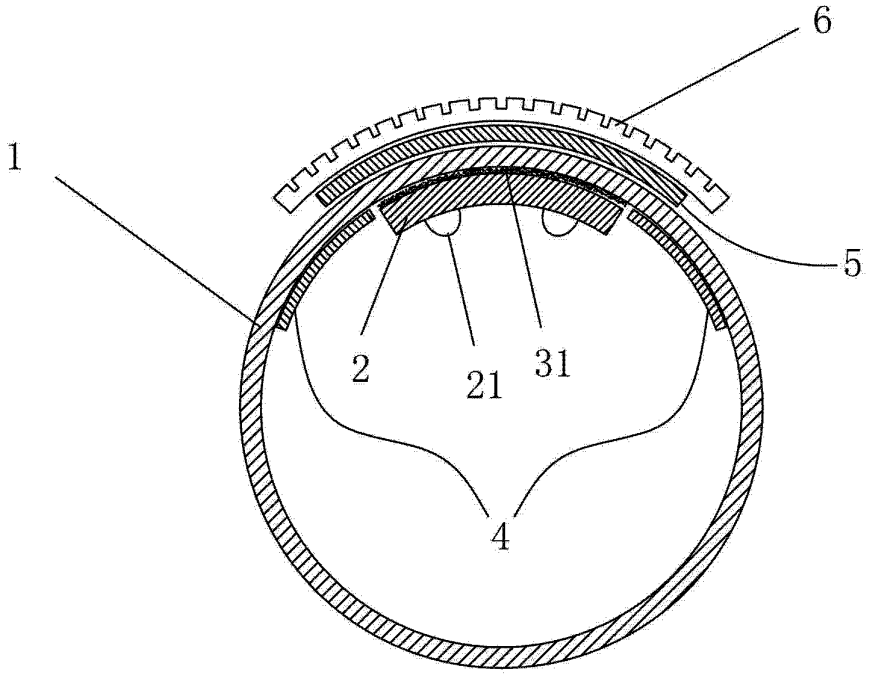

图 2

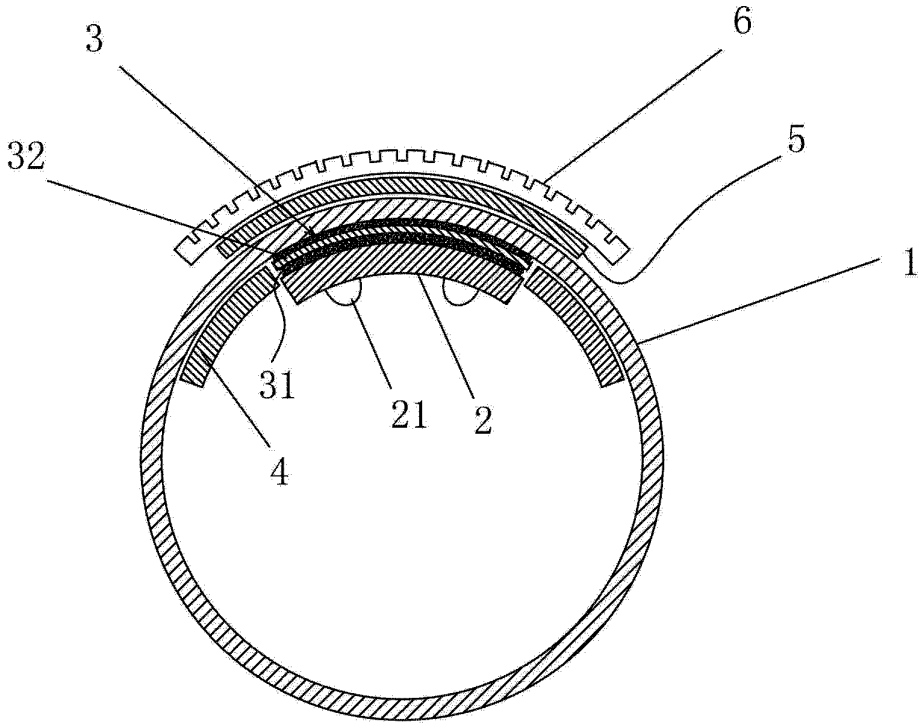

图 3

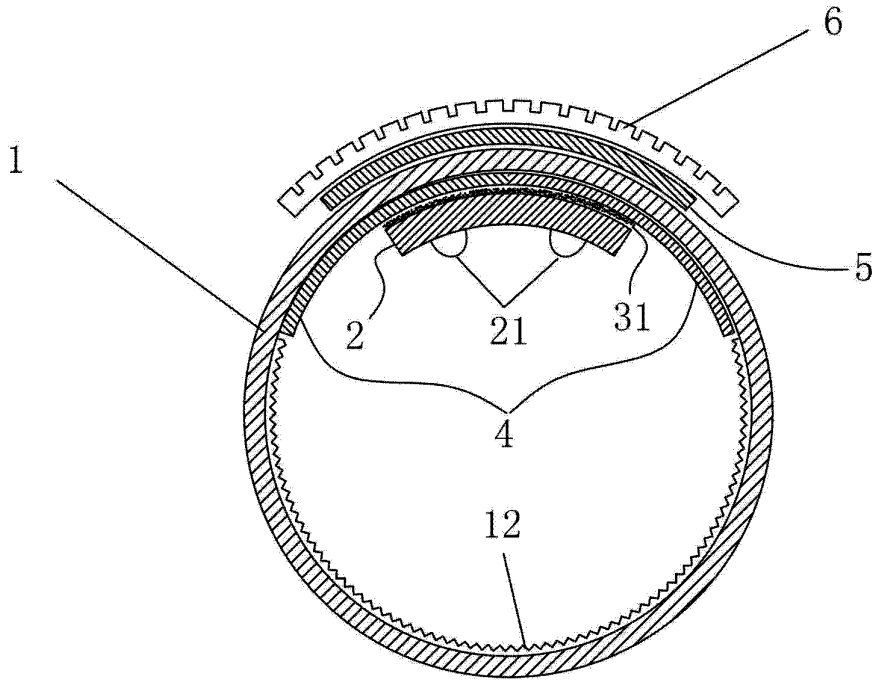

图 4

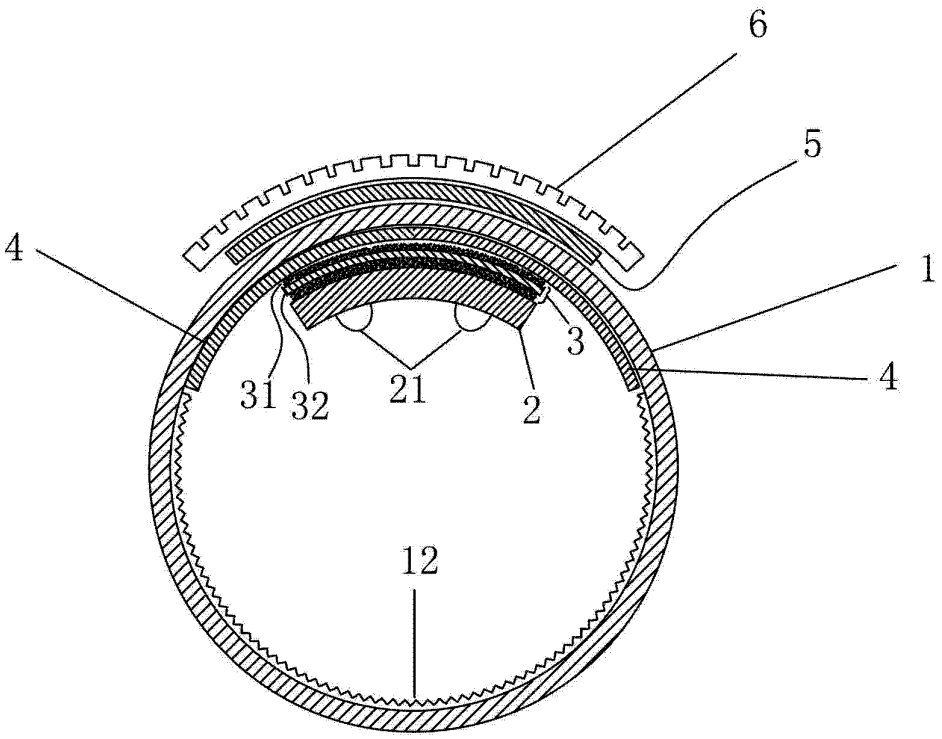

图 5

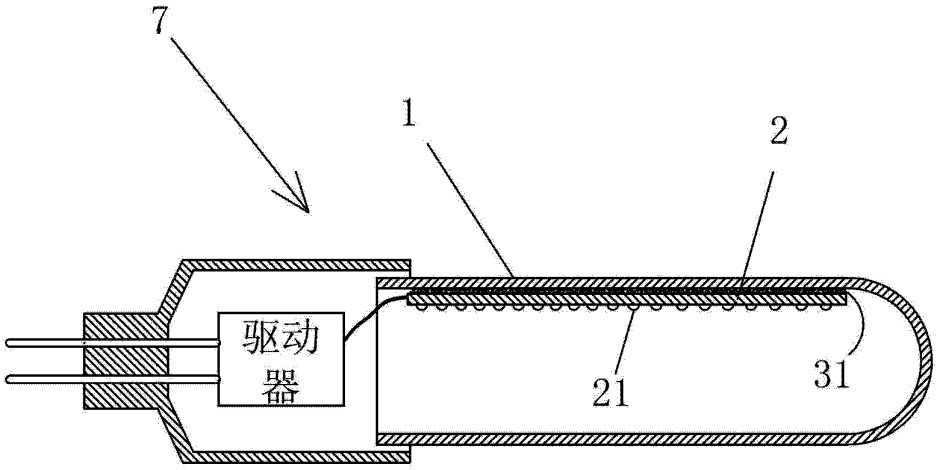

图 6