(12) INTERNATIONAL APPLICATION PUBLISHED UNDER THE PATENT COOPERATION TREATY (PCT)

(19) World Intellectual Property Organization
International Bureau

(43) International Publication Date
17 October 2013 (17.10.2013)

WIPO | PCT

(10) International Publication Number
WO 2013/152485 A1

(51) International Patent Classification:
F21S 2/00 (2006.01) *F21V 23/00* (2006.01)
F21V 3/00 (2006.01) *F21Y 101/02* (2006.01)
F21V 29/00 (2006.01)

(21) International Application Number:
PCT/CN2012/073813

(22) International Filing Date:
11 April 2012 (11.04.2012)

(25) Filing Language: English

(26) Publication Language: English

(71) Applicant *(for all designated States except US)*: **MASS TECHNOLOGY (H.K.) LIMITED** [CN/CN]; 31/F., Two Landmark East, 100 How Ming Street, Kwun Tong, Kowloon, Hong Kong (CN).

(72) Inventor; and
(75) Inventor/Applicant *(for US only)*: **FOO, Onn Fah** [CN/CN]; 31/F., Two Landmark East, 100 How Ming Street, Kwun Tong, Kowloon, Hong Kong (CN).

(74) Agent: **SHANGHAI PATENT & TRADEMARK LAW OFFICE, LLC**; 435 Guiping Road, Shanghai 200233 (CN).

(81) Designated States *(unless otherwise indicated, for every kind of national protection available)*: AE, AG, AL, AM, AO, AT, AU, AZ, BA, BB, BG, BH, BR, BW, BY, BZ, CA, CH, CL, CN, CO, CR, CU, CZ, DE, DK, DM, DO, DZ, EC, EE, EG, ES, FI, GB, GD, GE, GH, GM, GT, HN, HR, HU, ID, IL, IN, IS, JP, KE, KG, KM, KN, KP, KR, KZ, LA, LC, LK, LR, LS, LT, LU, LY, MA, MD, ME, MG, MK, MN, MW, MX, MY, MZ, NA, NG, NI, NO, NZ, OM, PE, PG, PH, PL, PT, QA, RO, RS, RU, RW, SC, SD, SE, SG, SK, SL, SM, ST, SV, SY, TH, TJ, TM, TN, TR, TT, TZ, UA, UG, US, UZ, VC, VN, ZA, ZM, ZW.

(84) Designated States *(unless otherwise indicated, for every kind of regional protection available)*: ARIPO (BW, GH, GM, KE, LR, LS, MW, MZ, NA, RW, SD, SL, SZ, TZ, UG, ZM, ZW), Eurasian (AM, AZ, BY, KG, KZ, MD, RU, TJ, TM), European (AL, AT, BE, BG, CH, CY, CZ, DE, DK, EE, ES, FI, FR, GB, GR, HR, HU, IE, IS, IT, LT, LU, LV, MC, MK, MT, NL, NO, PL, PT, RO, RS, SE, SI, SK, SM, TR), OAPI (BF, BJ, CF, CG, CI, CM, GA, GN, GQ, GW, ML, MR, NE, SN, TD, TG).

Published:
— *with international search report (Art. 21(3))*

(54) Title: LED LIGHT TUBE FOR USE IN FLUORESCENT LIGHT FIXTURE

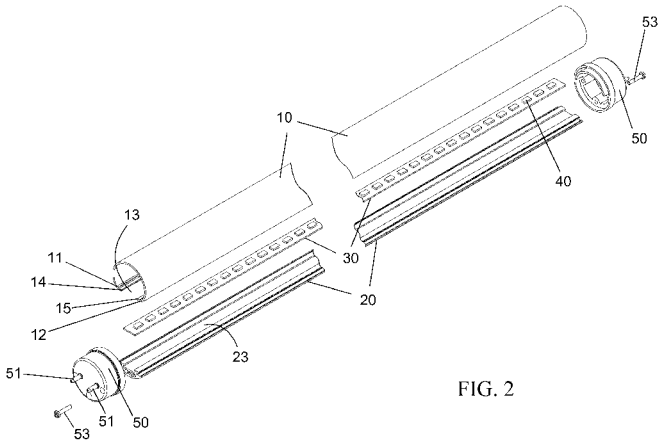

FIG. 2

(57) Abstract: A LED light tube comprises a translucent casing (10), a heat sink (20), a circuit board (30), at least one LED light source (40), and two end caps (50). The translucent casing (10) comprises first and second opposing axial edges (11,12) with an opening (13) formed therebetween. The heat sink (20) is provided with a retaining portion (23), and configured to couple to the casing (10) in a manner that the opening (13) of the casing (10) is covered by the heat sink (20). The heat sink (20) and the casing (10) together define a tubular structure with an interior cavity comprising a lower cavity half (17) and an upper cavity half (16), and the retaining portion (23) is located in the lower cavity half (17). The circuit board (30) is secured on the retaining portion (23) of the heat sink (20) in a thermally conductive manner. The LED light source (40) is mounted on the circuit board (30). The two end caps (50) are configured to fit over two ends of the tubular structure. The LED light tube produces an illumination pattern of a relatively wide angle of illumination and achieves highly efficient uniform light.

WO 2013/152485 A1

LED LIGHT TUBE FOR USE IN FLUORESCENT LIGHT FIXTURE

FIELD OF THE INVENTION

The present invention is generally related to a LED-based light tube. More specifically, the present invention concerns a LED light tube which permits an illumination pattern of a relatively wide angle of illumination and achieves highly efficient uniform lighting with high effective luminous flux.

BACKGROUND OF THE INVENTION

Fluorescent tube lamps are used extensively in commercial, industrial and household applications due to their low costs and high efficacy. Billions of fluorescent tubes are already installed worldwide. However, the fluorescent tube lamps utilize mercury to emit ultraviolet light, which is a hazardous element that may affects people's health, and the lifecycle of the fluorescent tubes are somewhat limited to about 15,000 hours or less.

As a solid state light source, LEDs (light-emitting diodes) emerged in the sixties of the 20th century and are a product with long life span, firm structure, low power consumption and flexible dimension such that they are becoming more and more popular. LED-based light tubes have been developed for use in the fluorescent light fixtures in place of conventional fluorescent tubes. The LED-based light tubes are sized in length and diameter to fit the existing fluorescent light fixtures.

However, due to the point source characteristics and limited illumination angle, the performance of the currently available LED-based light tubes do not satisfy the strict requirement of lighting professionals that the light source need to match the photometric of the luminaires to provide enough light intensity distributed evenly across wide illumination angles on the targeted illumination area in accordance with general lighting design practices.

U.S. Patent No. 7049761 discloses a light tube for illumination including a bulb portion and a circuit board with the LEDs mounted thereon. The circuit board is mounted on a structure with a H-shaped cross-section and the LEDs are all mounted on the higher location of the upper half of the bulb portion. This light tube results in limited illumination angle of 120 degrees or less as the light path to the lower half of the bulb portion is obscured by the H-shaped structure.

U.S. Patent Application No. 2010/0265732 teaches a light tube with LED light source including a casing, a control circuit board, an LED circuit board inside the casing, and LEDs

mounted on the LED circuit board. Again, the LEDs are all mounted on the upper half of the casing in this light tube, with a result of limited illumination angle similar to U.S. Patent No. 7049761. Moreover, the LEDs are distributed far apart from each other, this leads to uneven distribution of light along the light tube, and un-natural bright light spots can be clearly observed.

U.S. Patent Application No. 2010/0157608 discloses a LED lighting tube including a casing, an aluminum base board which fits into the casing and carries a plurality of LEDs, at least two reflective members respectively arranged on opposite sides of the LEDs. There are rasied ribs or similar structures formed on an inner surface of the casing to serve as a reflective member for the dispersion of light. This lighting tube has a potential disadvantage that the two reflective members limit its illumination angle and the thick tubular casing reduces light output.

U.S. Patent No. 8115411 teaches a LED light system for illumination. The illumination angle of this light system is increased by utilizing multiple strings of LEDs mounted at different angels inside a light tube. This definitely results in high costs and ineffective thermal dissipation of the LEDs.

Although a variety of LED light tubes exist in the prior art, these light tubes has the drawbacks of relatively narrow illumination angle and uneven light distribution. Even a diffusion structure is provided on the housing of the light tubes above the LEDs, the lights are diffused around the diffusion areas on the top. As a result, the ultimate illumination angle of the light tubes is still small, and a large part of the tube cannot emit light to form a dark area.

Therefore, there is a need for a LED light tube which cost-effectively provides uniform illumination along the tube with an illumination angle of 270 degrees or above to cater for various illumination applications. There is also a need for a LED light tube that increases luminous efficiency and has reduced loss of light energy.

SUMMARY OF THE INVENTION

The present invention has been developed to fulfill the needs noted above and therefore has a principle object of the provision of a LED light tube which produces evenly-distributed high lumens output along the length of the tube and covers an illumination angle of 270 degrees or above.

Another object of the invention is to provide a LED light tube in which low power LEDs are used to provide natural and evenly-distributed lighting pattern with high luminous efficiency and better management of heat generated by the LEDs during operation.

A yet object of the invention is to provide a LED light tube for use in fluorescent light

fixtures in place of conventional fluorescent tubes.

These and other objects and advantages of the invention are satisfied by providing a LED light tube comprising:

a translucent casing comprising first and second opposing axial edges with an opening formed therebetween;

a heat sink having an retaining portion, the heat sink being configured to couple to the casing in a manner that the opening of the casing is covered by the heat sink, wherein the heat sink and the casing together define a tubular structure with an interior cavity comprising a lower cavity half and an upper cavity half, and the retaining portion is located in the lower cavity half;

a circuit board secured on the retaining portion of the heat sink in a thermally conductive manner;

at least one LED light source mounted on the circuit board; and

two end caps configured to fit over two ends of the tubular structure.

Since the LED light sources are mounted at a very low position in the interior cavity of the tubular structure, together with the casing fabricated with selected materials, the LED light tube can emit light in a very wide angle which is 270 degrees or above. By selecting a material having an appropriate combination of light diffusion, transmission and reflection characteristics, the casing can produce an evenly-distributed illumination along the length of the tube with high luminous efficiency. Preferably, the material has a haze of about 85-99% and a transmittance of about 55-75%, and advantageously the material is constructed to have a surface roughness smaller than 0.8μm, e.g. 6μm or 7μm. The material may be selected from transparent plastics or glass doped with a diffusion substance selected from the powder of aluminum oxide, titanium oxide, silicon dioxide or other new nanotechnology compounds. Preferably, the diffusion substance is processed by the nanotechnologies to be in nano-powder form.

In one preferred embodiment of the invention, the material is polycarbonate doped with a diffusion substance for example titanium oxide powder. More preferably, the casing made of the polycarbonate has a thickness of about 0.5-1.5 mm, and the polycarbonate has a haze of about 90%-99% and a transmittance of about 60%-70%.

In one embodiment of the invention, the heat sink has a retention member formed along each of two opposing axial sides of the retaining portion for firm engagement with the circuit board, thereby enabling to secure the circuit board onto the heat sink. Advantageously, a thermally conductive material for example a thermally conductive grease is applied between the circuit board and the heat sink.

The first and second axial edges of the casing have first and second flanges extending

inward respectively, and the heat sink spans between the two ends of the tubular structure and is provided with two notches positionally configurable to accommodate and rigidly retain the first and second flanges in place. This ensures the firm connection between the casing and the heat sink.

At its outer surface, the heat sink has a plurality of radiating fins disposed in a spaced manner for a better thermal dissipation effect.

In order to enhance the thermal dissipation, the heat sink is advantageously formed with a thermally conductive material selected from the group consisting of aluminium, aluminium alloy, plastics, and ceramic.

In another embodiment of the invention, the circuit board extends through the tubular structure between the two ends of the tubular structure, comprising a first circuit board with a bridge rectifier and at least one second circuit board which are all electrically coupled to each other. One of the end caps has two pin connectors electrically coupled to the first circuit board, and the other end cap with two short-circuited pin connections is electrically isolated from the circuit board. The end caps may be configurable to be coupled to a fluorescent light tube socket.

Preferably, all the LED light sources in use are mounted in one straight line on the circuit board.

The circuit board may be fabricated from the glass enforced epoxy laminate sheets FR-4 type, composite epoxy material CEM-1/CEM2 type or Metal Core Printed Circuit Board (MCPCB) type. The circuit board preferably has a thickness of 1mm or less for good thermal conduction between the LED light sources mounted on one side thereof, and the heat sink that comes into contact with the other side thereof.

According to the invention, the control circuit of the LEDs including the driver and the other electronic components are not placed inside the tube, instead, they are mounted in the light fixture. This arrangement ensures that the control circuit is away from the high temperature as a result of the heat energy generated by the plurality of LED light sources during normal operation, and thus enhances its reliability and serviceability.

In contrast to the LED light tubes available in the prior art, the LED light tube of the invention is configured such that all the LED light sources are mounted in one straight line at a very low position of the lower cavity half of the cross-section of the tube. This increases the total illumination surface area on the casing especially on the lower cavity half. Another feature of the LED light tube of the invention is that the material of the casing is selected such that the light from the LED light sources are transmitted, diffused and reflected in the casing to produce a more uniform light intensity with increased illumination angle. The selected material and the controlled thickness of the casing permit to redirect a portion of

the light to pass therethrough to reduce the loss of light energy. Because the light output efficiently increases, the use of low power LEDs is possible, which allows for a heat sink of smaller size.

To have a better understanding of the invention reference is made to the following detailed description of the invention and embodiments thereof in conjunction with the accompanying drawings.

BRIEF DESCRIPTION OF THE DRAWINGS

Fig.1 is a perspective view of a LED light tube constructed in accordance with an embodiment of the invention.

Fig. 2 is an exploded view of the LED light tube of Fig. 1.

Fig. 3 is a top view of the LED light tube of Fig. 1.

Fig. 4 is a bottom view of the LED light tube of Fig. 1

Fig. 5 is a side view of the LED light tube of Fig. 1.

Fig. 6 is a cross-sectional view taken along line A-A of Fig. 5.

Fig. 7 is an end side view of the LED light tube of Fig. 1.

Fig. 8 is a view showing the light emission through the casing of the LED light tube of Fig. 1, wherein the light emission includes transmitted light emission, diffused light emission, reflected light emission and refluxed light emission.

Fig. 9A is a plot of the illumination pattern obtained from a conventional T8 LED light tube and measured under the condition of free burning.

Fig. 9B is a plot of the illumination pattern obtained from the T8 LED light tube of the invention and measured under the condition of free burning.

Fig. 9C is a plot of the illumination pattern obtained from a conventional T8 LED light tube and measured under the condition of burning in a wide-angle mirror reflector fluorescent light fixture.

Fig. 9D is a plot of the illumination pattern obtained from the T8 LED light tube of the invention and measured under the condition of burning in a wide-angle mirror reflector fluorescent light fixture.

Fig. 10A is a circuit diagram of a first PCB used in the LED light tube of Fig. 1.

Fig. 10B is a circuit diagram of a second PCB used in the LED light tube of Fig. 1.

Fig. 11 is an illustrative view of the electrical connection of the PCBs inside the LED light tube of Fig. 1.

Fig. 12A and 12B are illustrative views of the electrical connection of the LED light tube of Fig. 1 with a power source, showing that the light tube can be connected in either of the two directions.

DETAILED DESCRIPTION OF THE INVENTION

While this invention is illustrated and described in preferred embodiments, the LED light tube may be produced in many different configurations, sizes, forms and materials.

Referring now to the drawings, Figs. 1 to 7 provide a LED light tube 100 constructed consistent with a preferred embodiment of the present invention. The LED light tube 100 is sized in length and diameter for replacing conventional fluorescent light tube in a fluorescent fixture. In this embodiment, the LED light tube 100 comprises a casing 10, a heat sink 20, a circuit board 30, a plurality of LED light sources 40, and two end caps 50. The LED light tube further comprises a control circuit (not shown) for controlling the LED light sources. The control circuit is mounted outside the LED light tube 100 but fastened in the fluorescent fixture (see Figs. 12A and 12B). Such an arrangement of the control circuit not only prevents the control circuit from subjecting to the high temperature due to the heat generated by the LED light sources, but also ensures that the light emission of the LED light sources through the tube would not be hindered by the control circuit, unlike the prior art LED light tube where the control circuit is disposed inside the tube. The control circuit is not the essence of the invention and therefore not described in detail herein.

The casing 10 has a substantially Ω-shaped cross section comprising first and second opposing axial edges 11, 12 with an opening 13 formed therebetween. First and second flanges 14, 15 extend inward from the first and second axial edges 11, 12 in the axial direction, respectively. While the illustrated casing 10 is Ω-shaped, the casing having a square, triangular or other cross sectional shape may be used. The casing is made of a material having light diffusion, reflection and transmission properties for providing uniform light distribution and increasing the illumination angle of light distribution, which will be described in detail herein below.

The heat sink 20 is configured to couple to the casing 10 in a manner that the opening 13 of the casing 10 is completely covered by the heat sink 20 to define a tubular structure. As illustrated in Figs. 2 to 6, the heat sink 20 spans between two ends of the tubular structure. The heat sink 20 has two notches 21, 22 positionally correspond to the flanges 14, 15 of the casing 10 and a top surface which serves as a retaining portion 23 for carrying the circuit board 30 with the LED light sources 40 mounted thereon. By clamping the

flanges 14, 15 into the notches 21, 22, the casing 10 and the heat sink 20 can be fixed rigidly together to define a tubular structure with an interior cavity. Of course, the casing 10 and the heat sink 20 can be fixed together by use of a technique known in the art, for example snap-fit or fasteners. The interior cavity of the tubular structure consists of two sections on the halves along a horizontal central axis B-B: an upper cavity half 16 and a lower cavity half 17. The heat sink 20 is sized such that the retaining portion 23 is located in the lower cavity half 17, allowing more than a half of the surface of the casing 10 to emit light. In the present embodiment, the heat sink 20 is sized in height such that the retaining portion 23 is located at a position close to the bottom of the tubular structure, allowing a large portion of the tubular structure (e.g. more than 60% of the surface of the tubular structure) to emit light.

Positioned along each of two opposing axial sides of the retaining portion 23 is a retention member formed as a slot 24. The slot 24 is sized and shaped such that it is snugly engaged with the circuit board 30 while the LED light sources 40 mounted on the circuit board 30 are exposed centrally. A layer of a thermally conductive material for example a thermally conductive grease may be applied between the circuit board 30 and the retaining portion 23 of the heat sink 20 to obtain a better thermally conductive effect. Of course, the circuit board 30 can be secured on the heat sink 20 to create good performances of thermal conduction and thermal dissipation therebetween by use of a technique known in the art. For example, the circuit board 30 can be attached to the heat sink 20 through a viscous conductive grease or glue. In addition, the heat sink 20 has on its outer surface a plurality of radiating fins 25 that are parallel to the axis of the tubular structure and disposed in a spaced manner. The arrangement of the radiating fins 25 further boosts the dissipation of heat energy generated by the LED light sources 40. The heat sink 20 further comprises a screw hole 26 at both ends thereof at a position corresponding to the screw holes 52 of the end caps 50.

The heat sink 20 is preferably formed with a thermally conductive material selected from the group consisting of metals such as aluminium and aluminium alloy, plastics and ceramic. The material of the heat sink 20 preferably has a high mechanical strength, so that the tubular structure formed by coupling the heat sink and the casing together remains rigid in the required length.

The circuit board 30 is formed by electrically connecting one first printed circuit board (PCB) 31 and a plurality of second printed circuit board (PCB) 32. The first and second PCBs may be joined by electrical connectors 34 (see Fig. 11). The first PCB 31 is configured to contain a bridge rectifier 33 such that the light tube is not sensitive to the polarity of the direct current feed from the control circuit, hence the light tube 100 can be operatively mounted in either of the two directions in the fluorescent lighting fixture. The

second PCB 32 does not have the rectifier. Alternatively, the circuit board 30 may be made in one piece with one end containing the bridge rectifier. The circuit board 30 has a LED-mounting side on which the LED light sources 40 are mounted and a heat transferring side opposite the LED-mounting side for facilitating the heat transfer from the LED light sources 40 to the heat sink 20. The circuit board 30 can be the conventional FR4 or CEM type, or the metal core printed circuit board (MCPCB) for better thermal management. As discussed above, the circuit board 30 is slid into the slots 24 of the heat sink and fixed in place.

The LED light source 40 can be a LED, a LED package or an LED array. All the LED light sources 40 may be connected in series and/or in parallel, but they are mounted axially in a single straight line on the circuit board 30. This one-straight-line arrangement of the LED light sources is particularly cost-effective in terms of the capacity of the heat sink and the light output efficiency of the light tube. The number of the LED light sources 40 in the light tube 100 is selected to cater for the desired power according to the actual needs and the particular applications. For example, a single line of total 144 pieces of LED at a total consumption of 33W attains an output of 3,000 Lumens at 4000K color temperature.

Figs. 10A and 10B illustrate the circuit diagrams of the LED light sources mounted on the first PCB 31 and the second PCB 32, respectively. The LED light sources 40 can be mounted on the first PCB 31 and the second PCB 32 by solder, snap-fit connection or other means known in the art. The light output of the LED light tube 100 can obtain an enhanced luminous efficiency, and it has been found that the luminous flux of the LED light tube 100 is increased with respect to the existing LED light tubes in the prior art for the reasons of improved light emission discussed below, hence low power LED light sources can be used in the LED light tube 100 to provide natural and evenly distributed light pattern. This saves energy and allows for a heat sink of smaller size.

The end caps 50 are provided to fit over the two ends of the tubular structure defined by the casing 10 and the heat sink 20. Fig. 7 is an end view of the end cap 50 which is a G13 end cap adapted for coupling to a conventional fluorescent light fixture. It would be appreciated that other configuration is possible for the end caps. In this embodiment, each end cap 50 includes two pin connectors 51 for connection to the fluorescent light tube socket, and a screw hole 52. The two pin connectors 51 of one of the end caps 50 are electrically connected to the rectifier 33 of the first PCB 31 for providing power to the LED light sources 40; and the two pin connectors 51 of the other end cap 50 are shorted together and electrically isolated from the second PCB 32. With such a wiring arrangement, the LED light tube 100 can maintain its functionality no matter which direction it is plugged into the fluorescent light tube sockets, which is shown more clearly in Figs. 12A and 12B. As illustrated, the LED light tube 100 is allowed to be installed onto the sockets without the need of distinguishing the polarity of the LED light sources 40. The end cap 50 and the heat

sink 20 are fixed together by using a self tapping screw 53 through the screw hole 52 of the end cap 50 and the screw hole 26 of the heat sink 20. The end caps 50 can be made of plastics, or metal or a combination thereof.

Preferably, the inner surface of the casing 10 and the exposed surface of the circuit board 30 are made to possess reflective properties to enhance the reflection of light inside the interior cavity of the light tube. For example, these surfaces may be configured as reflective white surfaces.

To assemble the LED light tube 100, it involves electrically attaching the first and second PCBs to form the circuit board 30 with the LED light sources mounted thereon, securing the circuit board 30 onto the heat sink 20, coupling the casing 10 to the heat sink 20, and attaching the end caps 50 onto the two ends of the tubular structure, thereby forming an integrated and solid light tube structure.

One of the features of the invention is the selection of a material for the casing 10. By selecting the material having an appropriate combination of characteristics of light-diffusion, light transmission and light reflection, the casing enables to increase the illumination angle of the light emitting from the LED light sources to 270 degrees or above and also result in uniform light distribution. In particular, the material is selected to allow the light emitting from the LED light sources to pass through the casing 10 through light transmission, light diffusion, light reflection and light refluxing.

The degree of light diffusion and transmission of a material is called “haze”. The haze may be controlled by the doping level of a microscopic diffusion substance such as titanium oxide powder in the material. The higher level of doping, the more light is diffused to the neighboring areas and the less light penetrates the material and transmit directly through the material, resulting in higher light attenuation and lower light output, which can be described as a low transmittance and high haze condition. On the opposite, if there are too little doping materials, the more light escapes from the material and the weaker the diffusing effect of the material is, resulting in bright spots and uneven light distribution observed along the length of the light tube, which can be described as a high transmittance and low haze condition.

To achieve the even light distribution and the effective light extraction as described above, the material of the casing 10 should be selected properly. The casing 10 may be made from polycarbonate, acrylic/PMMA, glass or other suitable transparent materials doped with a diffusion substance such as titanium oxide, aluminum oxide, silicon dioxide etc.. to obtain the desired haze and transmittance according to the invention. In one preferred embodiment, the material of the casing 10 is polycarbonate doped with titanium oxide, which has a haze of about 90%-99% preferably 96%-99%, and a transmittance of

about 60%-70%.

Fig. 8 illustrates a schematic diagram of the light passing through the casing 10. The lines in bold represent a portion of light 61 transmitting directly from the LED light sources 40, and a part of the light 61 penetrate through the casing 10, which forms the primary light emission. The lines in thin represent a portion of the light 62 which is first reflected from the casing 10 and then passes through the casing 10 in the lower cavity half 16, this portion of the light facilitates to increase the illumination angle to more than 270 degrees.

As discussed above, the inner surface of the casing 10 is highly reflective, a large portion of the incident light generated by the LED light sources 40 are reflected back to the interior cavity of the light tube. The reflected light can exit the casing 10 from different angles or directions, which go beyond the LED's original light emission coverage of less than 120 degrees defined by the transmitted lights 61. The reflected lights can also generate secondary "reflux" reflections on the reflective inner surface of the casing 10, the heat sink 20, and the reflective exposed surface of the circuit board 30 to yield a portion of refluxed light 63. Although the portion of the refluxed light 63 is less luminous than the transmitted light 61 and the directly reflected light 62, it not only extends the light to the low angle locations very close to the bottom of the tubular structure, but also enhances the light output of the light tube 100. The inner surface of the casing 10 may be constructed to have a surface roughness of smaller than 0.8μm to enhance the reflectance and reflux of the light.

Another portion of light emission of the casing 10 is the diffused light 64 which is represented in broken line in Fig. 8. The diffused light is achieved by selecting the material of light diffusing properties with controlled diffusion indexes that emit the light at a wide illumination angle. As can be seen in Fig. 8, the portion of diffused light 64 enables to spread the light evenly and extract light more effectively across a wide illumination angle.

The thickness of the casing also affects its transmittance. At the same diffusion doping level, the thinner the casing, the more the cost effectiveness because less material will be used and the maximum light output will be higher. However the thinner the diffuser, the mechanical strength is affected and the light tube will be less robust in construction. In one embodiment of the invention, the diameter of the light tube is 1 inch, the thickness of the casing 30 is 0.5 to 1.5 mm, preferably 1.0mm.

Reference is now made to Figs. 9A to 9D. These figures illustrate the illumination patterns obtained from a conventional T8 LED light tube and the LED light tube 100 with its casing made from polycarbonate doped with titanium oxide having the preferred haze and transmittance discussed above, which are measured under the condition of free burning and the condition of burning in a wide-angle mirror reflector fluorescent light fixture, respectively. The term "free burning" refers to the condition where the light tube is turned on

without coupling to any light tube fixture, and the term “burning in a wide angle mirror reflector fluorescent light fixture” refers to the condition where the light tube is turned on after it is coupled to a light tube fixture with a wide angle mirror reflector. In these figures, the inner plots are measured when the light tubes are viewed from the end caps of the light tubes, while the outer plots are measured when the light tubes are viewed along the axial lines of the light tubes.

Figs. 9A and 9C show the illumination patterns obtained using a conventional T8 LED light tube in the art; and Figs. 9B and 9D show the illumination patterns obtained using the LED light tube 100 of T8 type. As can be seen, no matter the light tubes are viewed from the end caps or along the axial lines thereof, the coverage of illumination obtained by the LED light tube 100 is larger than the coverage of the illumination obtained by the conventional LED light tube. This suggests that the LED light tube of the invention has a wider illumination angle than the conventional LED light tube.

The invention thus provides a LED light tube for use in the fluorescent light fixtures in place of conventional fluorescent tubes, which is able to distribute light evenly and extract light more effectively across a wide illumination angel of 270 degrees or above. The LED light tube has improved light efficiency and higher luminous flux. This is because the LED light sources are positioned close to the bottom of the tube and the material of the casing is selected to have the desired light diffusion, light transmission and light reflection properties.

Having sufficiently described the nature of the present invention according to some preferred embodiments, the invention, however, should not be limited to the structures and functions of the embodiments and drawings. It is stated that insofar as its basic principle is not altered, changed or modified it may be subjected to variations of detail. Numerous variations and modifications that are easily obtainable by means of the skilled person's common knowledge without departing from the scope of the invention should fall into the scope of this invention.

What is claimed is:

1. A LED light tube comprising:

a translucent casing comprising first and second opposing axial edges with an opening formed therebetween;

a heat sink having an retaining portion, the heat sink being configured to couple to the casing in a manner that the opening of the casing is covered by the heat sink, wherein the heat sink and the casing together define a tubular structure with an interior cavity comprising a lower cavity half and an upper cavity half, and the retaining portion is located in the lower cavity half;

a circuit board secured on the retaining portion of the heat sink in a thermally conductive manner;

at least one LED light source mounted on the circuit board; and

two end caps configured to fit over two ends of the tubular structure.

2. A LED light tube according to claim 1, wherein a material capable of transmitting, diffusing, and reflecting light is selected to make the casing.

3. A LED light tube according to claim 2, wherein the material has a haze of about 85-99% and a transmittance of about 55-75%.

4. A LED light tube according to 3, wherein the material is selected from transparent plastics or glass doped with a diffusion substance

5. A LED light tube according to claim 4, wherein the diffusion substance is selected from titanium oxide, aluminum oxide, silicon dioxide or zinc oxide.

6. A LED light tube according to 4, wherein the material is polycarbonate doped with titanium oxide.

7. A LED light tube according to 6, wherein the casing made of the polycarbonate has a thickness of about 0.5-1.5 mm, and the polycarbonate has a haze of about 90%-99% and a transmittance of about 60%-70%.

8. A LED light tube according to claim 1, wherein the casing has an inner surface with a surface roughness smaller than 0.8μm.

9. A LED light tube according to any one of claims 1 to 8, wherein the heat sink has a retention member formed along each of two opposing axial sides of the retaining portion for firm engagement with the circuit board.

10. A LED light tube according to any one of claims 1 to 8, wherein the first and second axial edges of the casing have first and second flanges extending inward respectively, and the heat sink spans between the two ends of the tubular structure and is

provided with two notches positionally configurable to accommodate and rigidly retain the first and second flanges in place.

11. A LED light tube according to any one of claims 1 to 8, wherein a thermally conductive material for example a thermally conductive grease is applied between the circuit board and the heat sink.

12. A LED light tube according to any one of claims 1 to 8, wherein the heat sink has a plurality of radiating fins in a spaced fashion on its outer surface.

13. A LED light tube according to any one of claims 1 to 8, wherein the heat sink is formed with a thermally conductive material selected from the group consisting of aluminium, aluminium alloy, plastics, and ceramic.

14. A LED light tube according to any one of claims 1 to 8, wherein the circuit board extends through the tubular structure between the two ends of the tubular structure, comprising a first circuit board with a bridge rectifier and at least one second circuit board which are electrically coupled to each other.

15. A LED light tube according claim 14, wherein one of the end caps has two pin connectors electrically coupled to the rectifier of the first circuit board, and the other end cap with two short-circuited pin connectors is electrically isolated from the second circuit board.

16. A LED light tube according to any one of claims 1 to 8, wherein the circuit board is the type of FR-4, CEM1, CEM2 or metal core printed circuit board.

17. A LED light tube according to any one of claims 1 to 8, wherein the end caps are configurable to be coupled to a fluorescent light tube socket.

18. A LED light tube according to any one of claims 1 to 8, wherein the casing is configurable to have a reflective inner surface, and the circuit board is configurable to have a reflective exposed surface.

19. A LED light tube according to any one of claims 1 to 8, comprising a plurality of LED light sources which are mounted in one straight line on the circuit board.

20. A LED light tube according to any one of claims 1 to 8, wherein the LED light source is arranged in the lower cavity half of the tubular structure at a position close to a bottom of the tubular structure.

21. A LED light tube according to claim 20, wherein the LED light tube produces an illumination pattern having an illumination angle greater than 270 degrees.

1/11

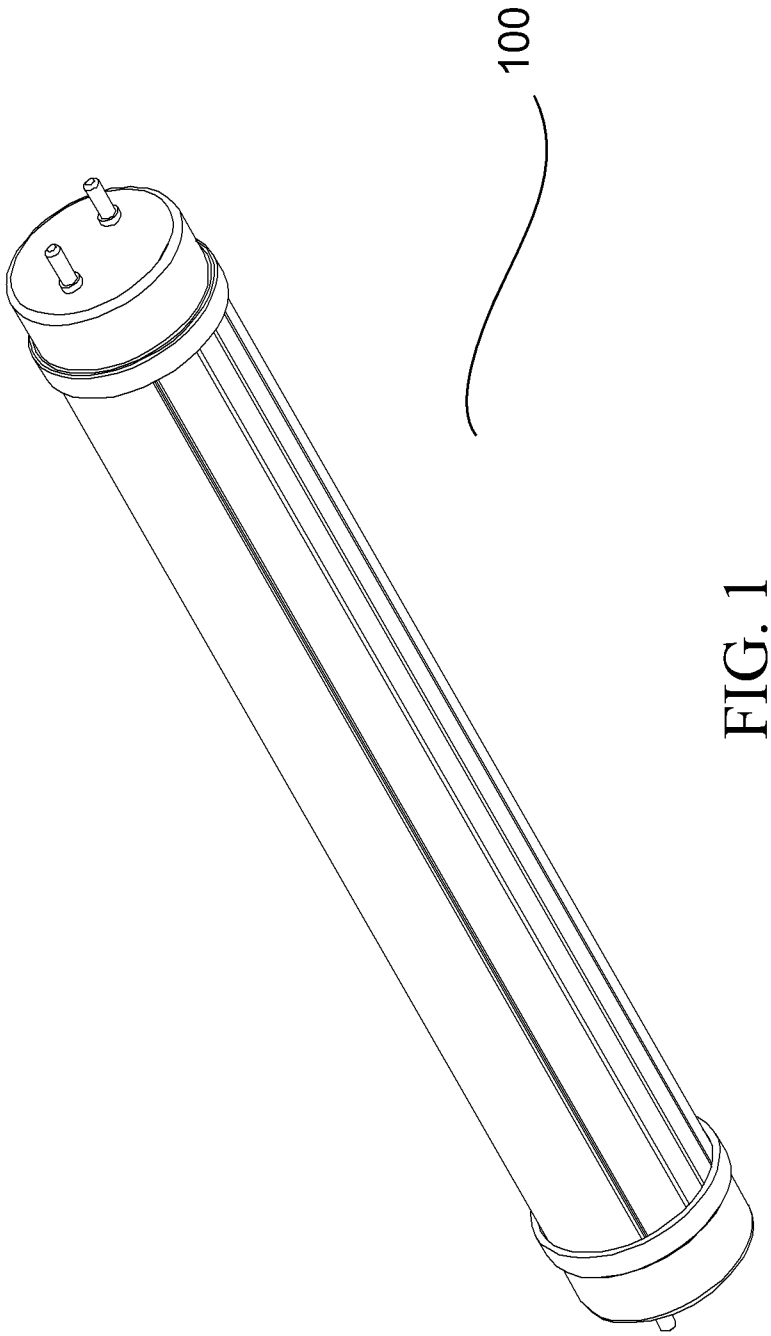

FIG. 1

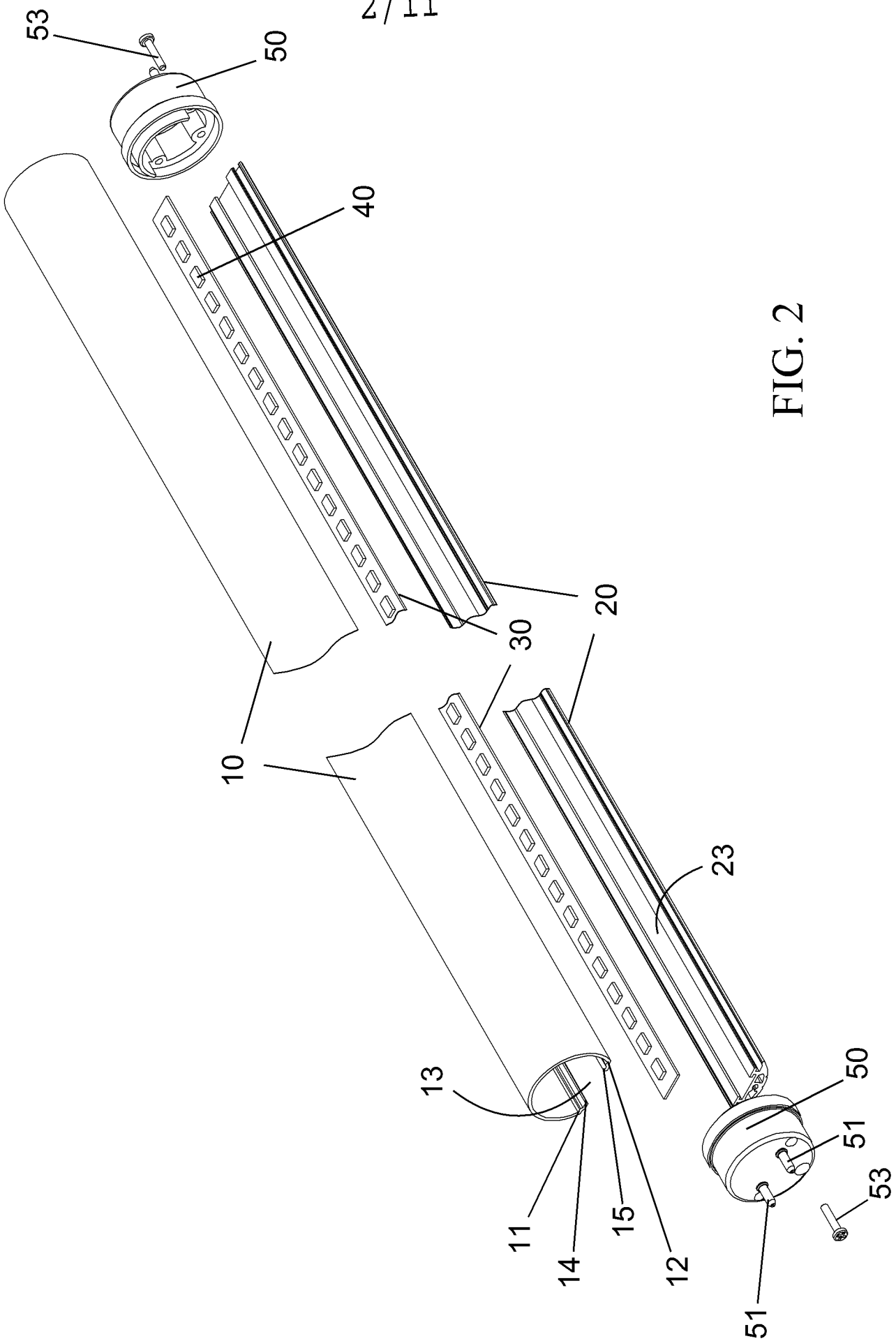

FIG. 2

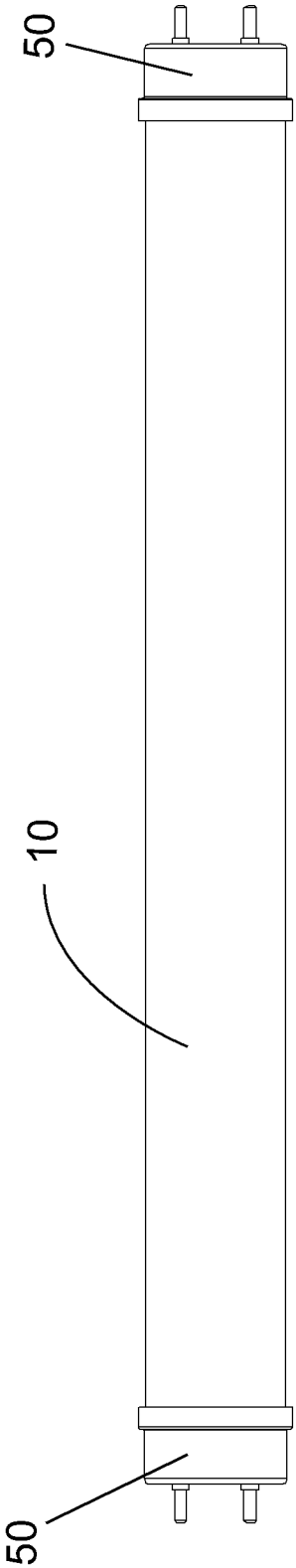

FIG. 3

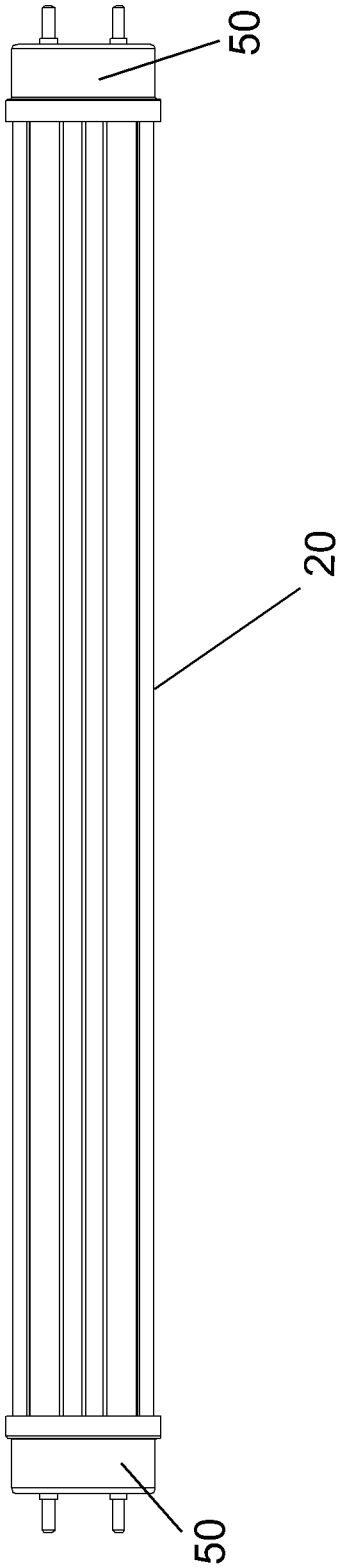

FIG. 4

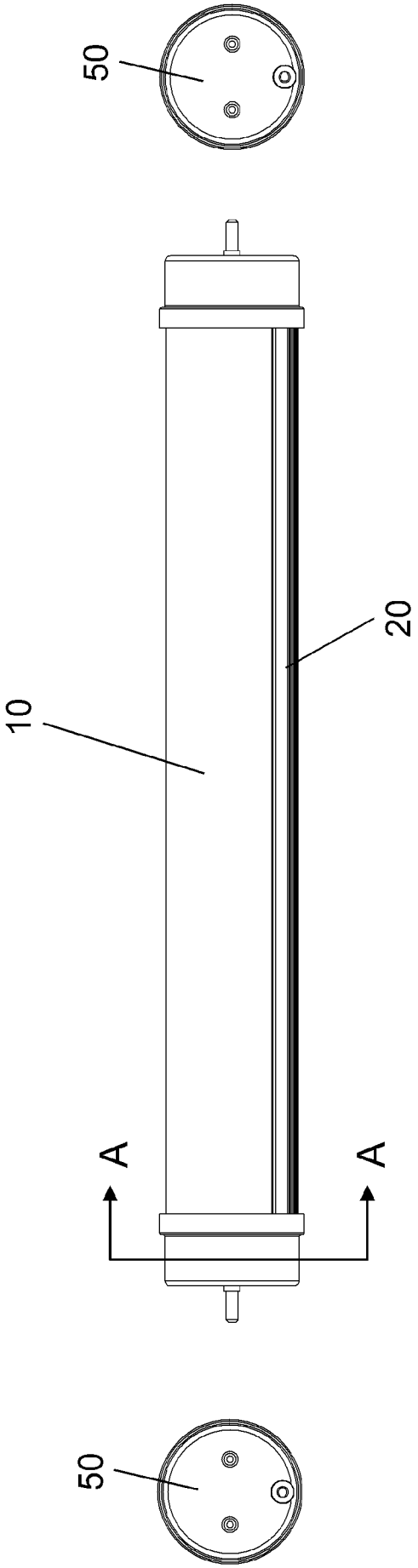

FIG. 5

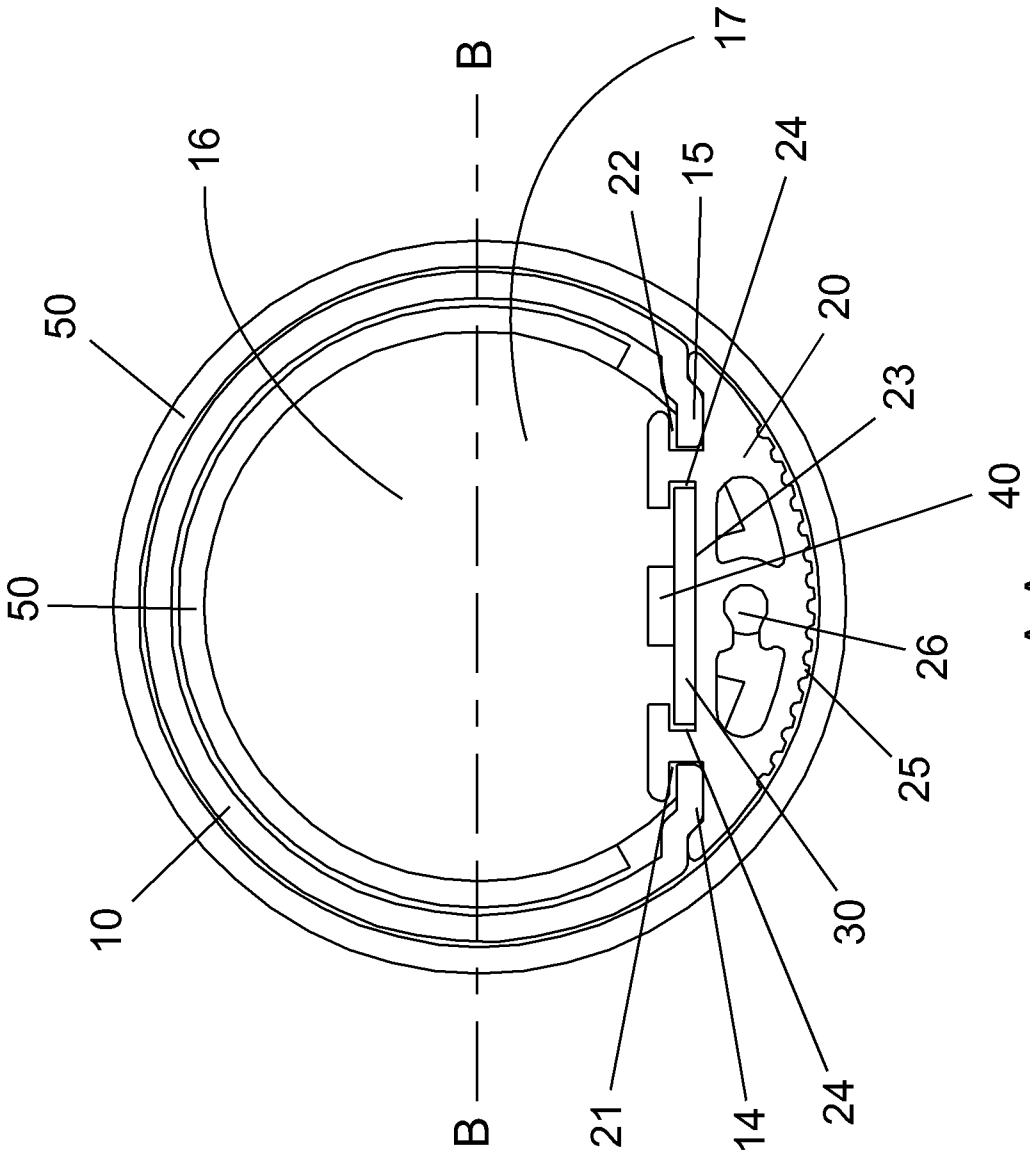

A-A

FIG. 6

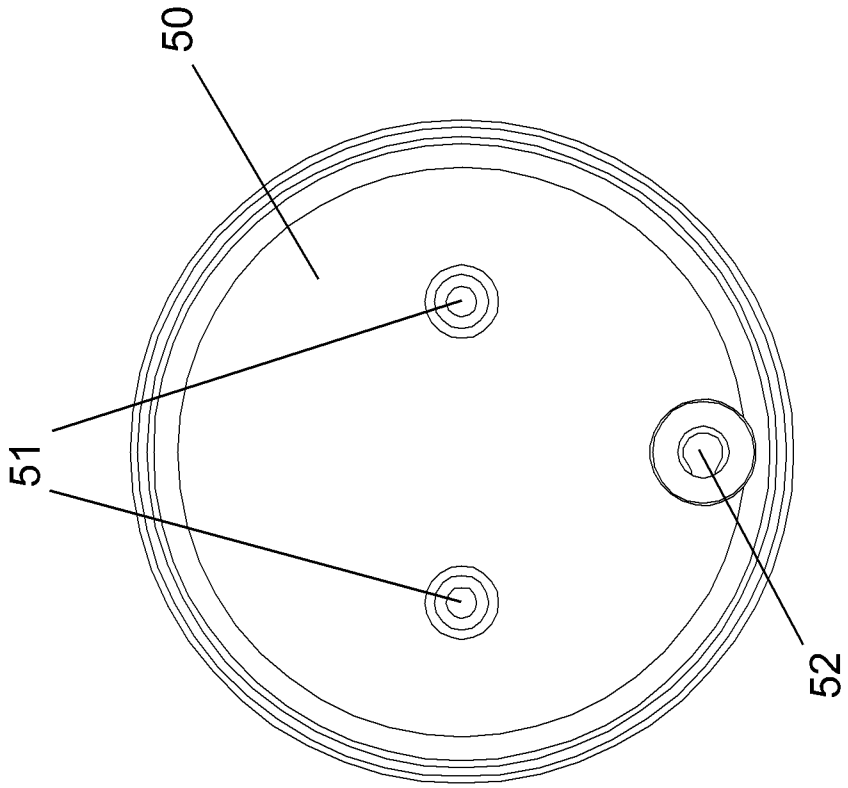

FIG. 7

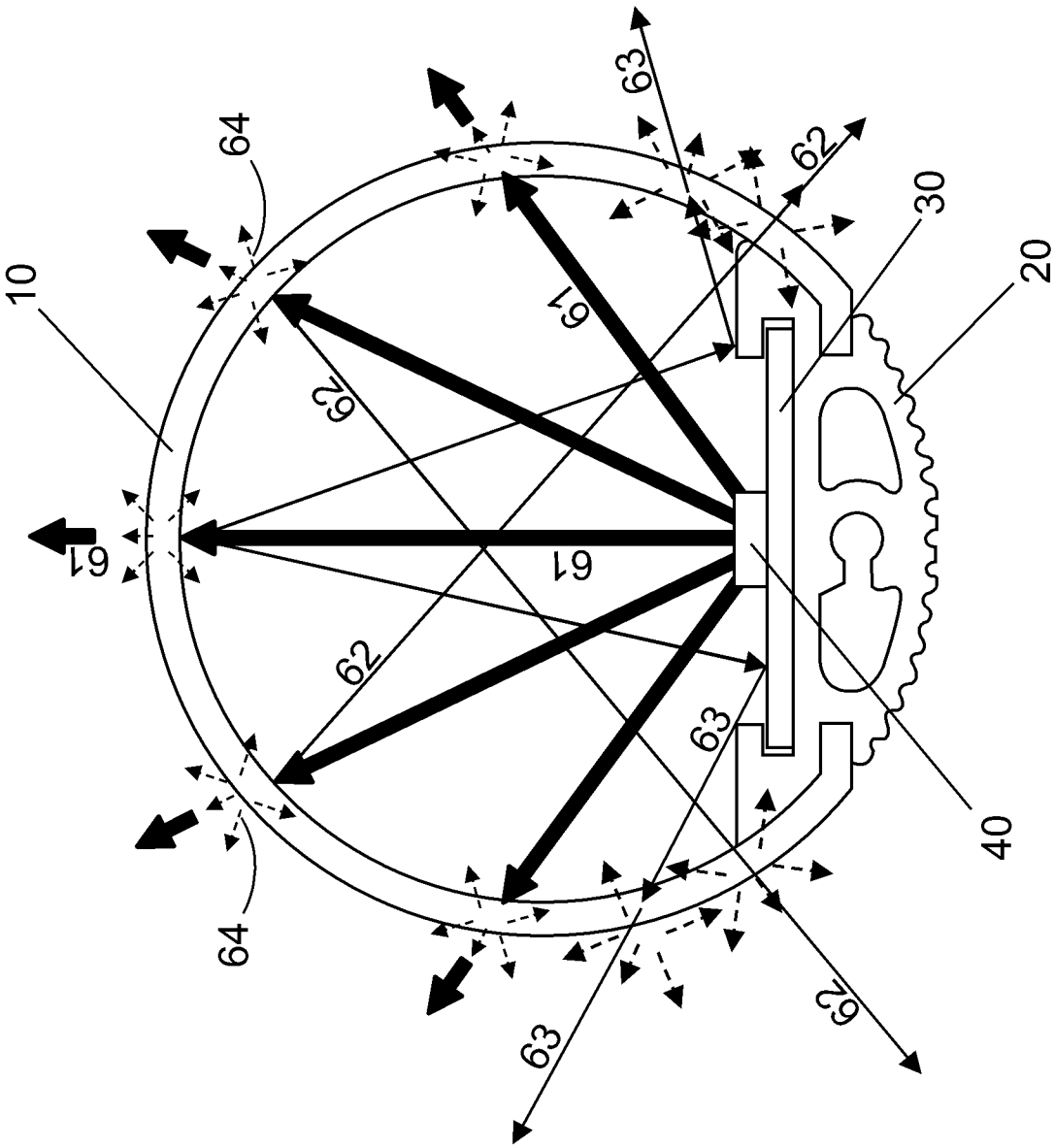

FIG. 8

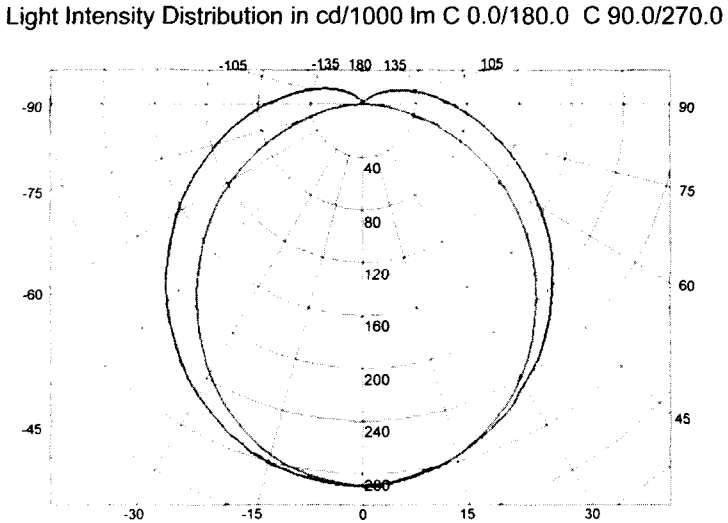

FIG 9A

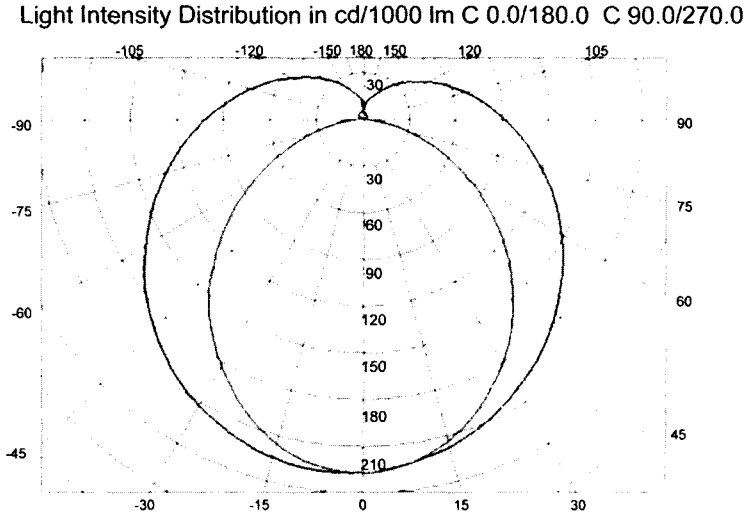

FIG 9B

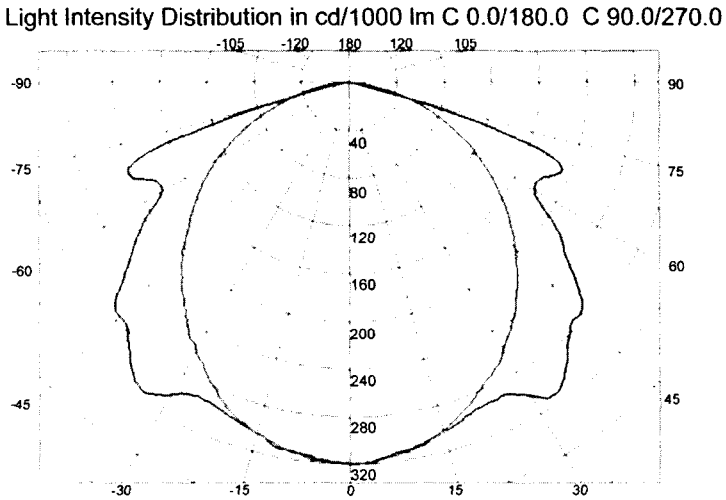

FIG 9C

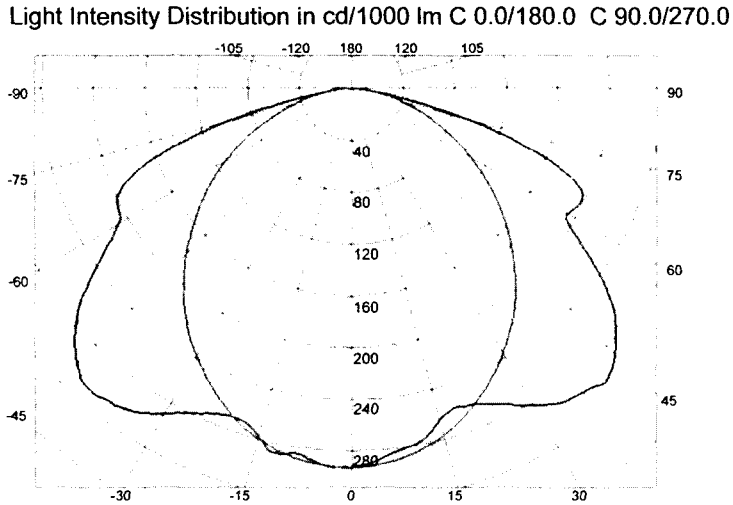

FIG 9D

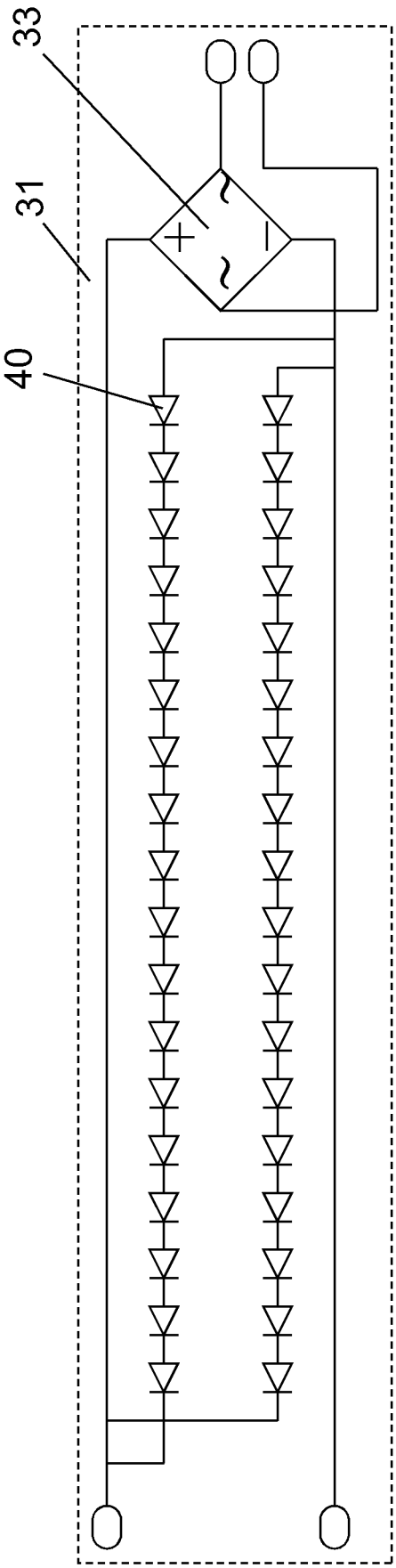

FIG. 10A

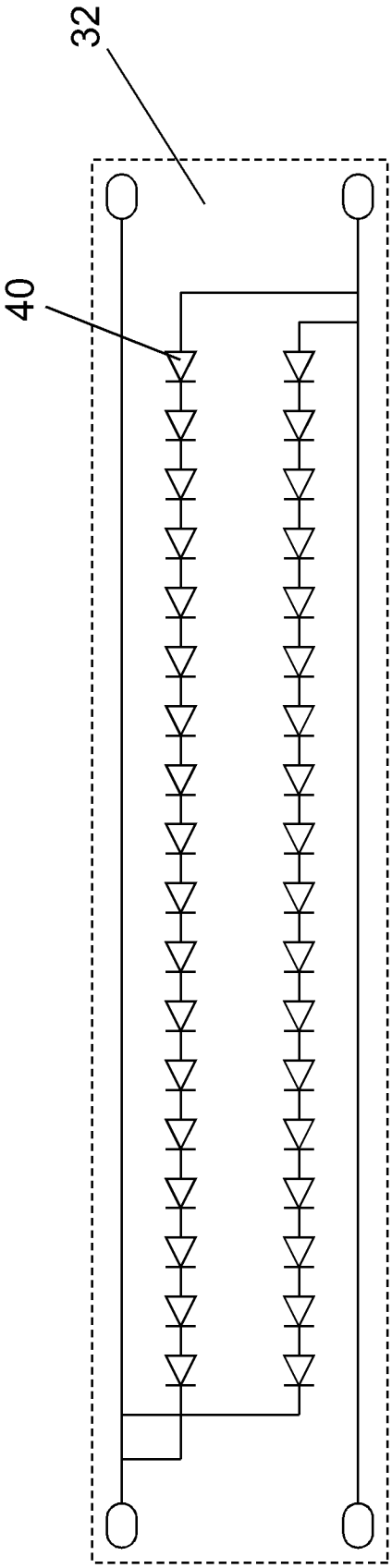

FIG. 10B

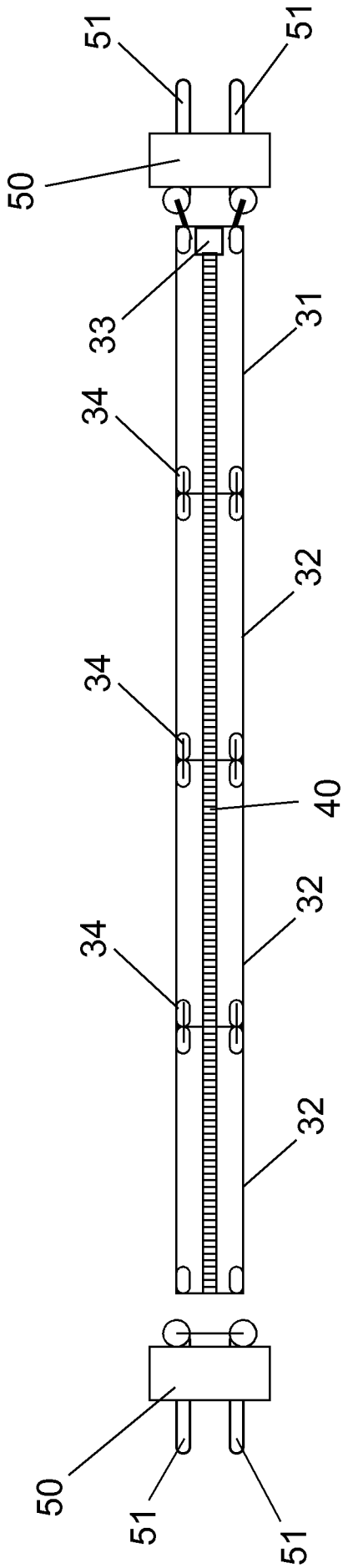

FIG. 11

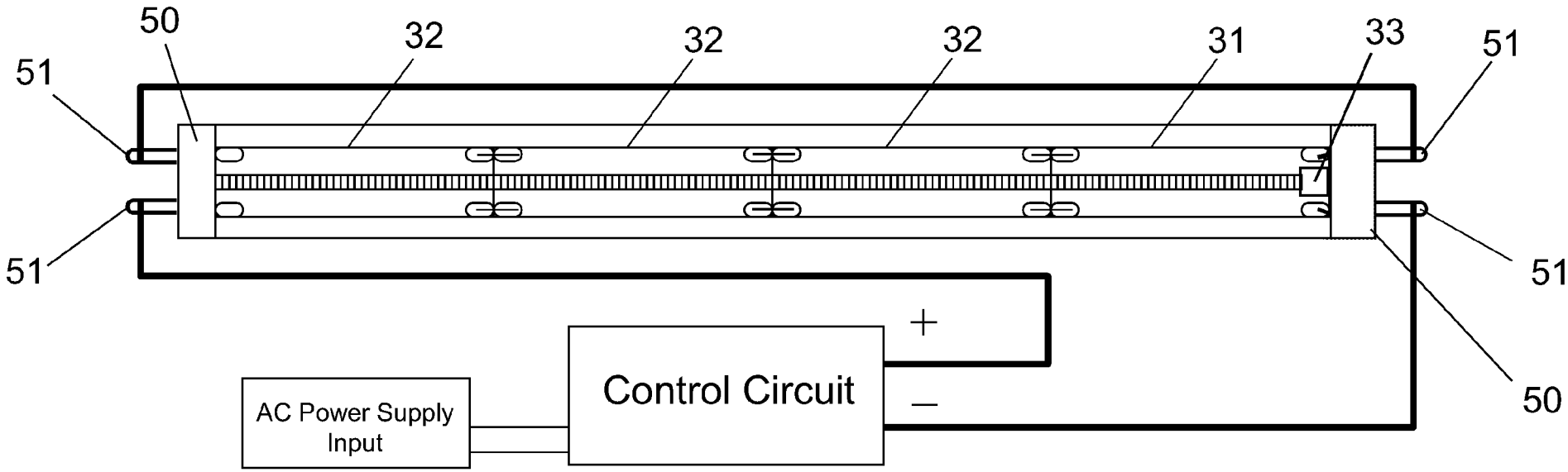

FIG. 12A

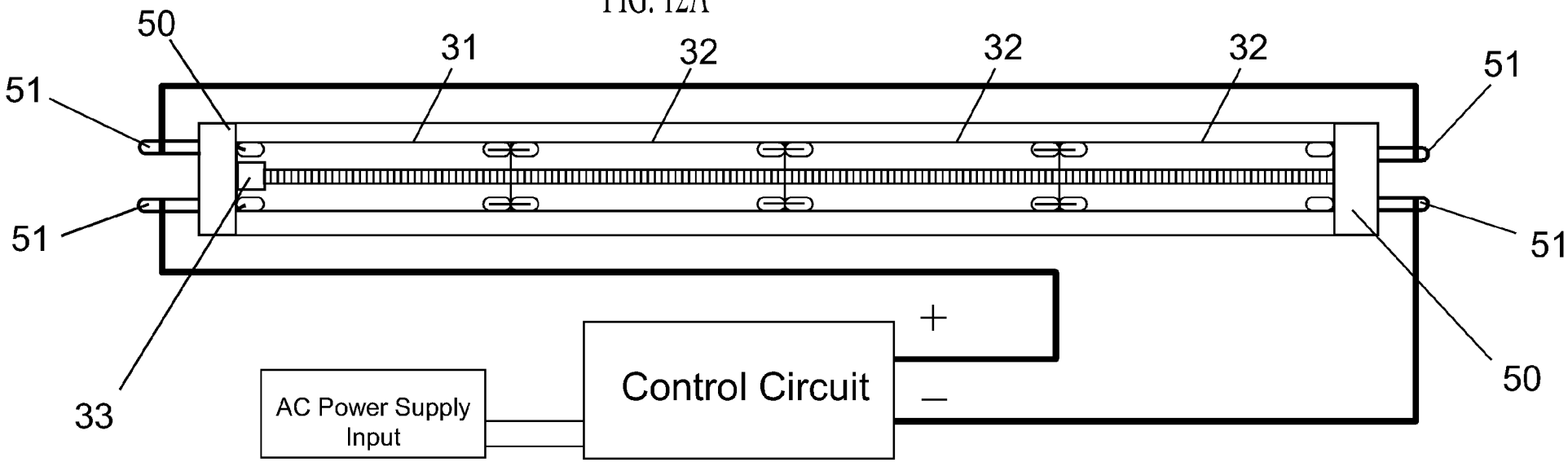

FIG. 12B

INTERNATIONAL SEARCH REPORT

International application No.
PCT/CN2012/073813

A. CLASSIFICATION OF SUBJECT MATTER

See extra sheet

According to International Patent Classification (IPC) or to both national classification and IPC

B. FIELDS SEARCHED

Minimum documentation searched (classification system followed by classification symbols)

IPC:F21

Documentation searched other than minimum documentation to the extent that such documents are included in the fields searched

Electronic data base consulted during the international search (name of data base and, where practicable, search terms used)

CNABS,CPRSABS,DWPI,SIPOABS,CNKI LED?,LIGHT+ 1W EMIT+ 1W DIODE?,FLUORESCENT, DAYLIGHT,SOLAR,LAMP?,LIGHT+,TUBE,PCB,CIRCUIT? 1W BOARD?,HEAT,THERMAL,DISSIPAT+, SINK,DISPERS+,DIFFUS+,RELEAS+,DISCHARG+,EXCHANG+,RADIAT+,SCAT+

C. DOCUMENTS CONSIDERED TO BE RELEVANT

Category*	Citation of document, with indication, where appropriate, of the relevant passages	Relevant to claim No.
X	CN201964257U(BEIJING LED LIGHTING ENGINEERING CO LTD), 07 Sept. 2011 (07.09.2011), the description paragraphs 8-49, figures 1-4	1-21
X	CN201539754U(DONGGUAN JINYANG POWER SAVING TECHNOLOGY CO LTD), 04 Aug.2010(04.08.2010), the description paragraphs 6-25, figures 1-5	1-21
X	CN202140824U(XIAMEN SUPERLIGHT OPTOELECTRONICS), 08 Feb. 2012(08.02.2012), the description paragraphs 6-32, figures 2-4	1-21

☒ Further documents are listed in the continuation of Box C. ☒ See patent family annex.

* Special categories of cited documents:

"A" document defining the general state of the art which is not considered to be of particular relevance

"E" earlier application or patent but published on or after the international filing date

"L" document which may throw doubts on priority claim (S) or which is cited to establish the publication date of another citation or other special reason (as specified)

"O" document referring to an oral disclosure, use, exhibition or other means

"P" document published prior to the international filing date but later than the priority date claimed

"T" later document published after the international filing date or priority date and not in conflict with the application but cited to understand the principle or theory underlying the invention

"X" document of particular relevance; the claimed invention cannot be considered novel or cannot be considered to involve an inventive step when the document is taken alone

"Y" document of particular relevance; the claimed invention cannot be considered to involve an inventive step when the document is combined with one or more other such documents, such combination being obvious to a person skilled in the art

"&"document member of the same patent family

Date of the actual completion of the international search	Date of mailing of the international search report
7 Jan. 2013(07.01.2013)	**24 Jan. 2013 (24.01.2013)**
Name and mailing address of the ISA/CN The State Intellectual Property Office, the P.R.China 6 Xitucheng Rd., Jimen Bridge, Haidian District, Beijing, China 100088 Facsimile No. 86-10-62019451	Authorized officer ZHU, Yucheng Telephone No. (86-10)62085161

Form PCT/ISA /210 (second sheet) (July 2009)

INTERNATIONAL SEARCH REPORT

International application No.
PCT/CN2012/073813

C (Continuation). DOCUMENTS CONSIDERED TO BE RELEVANT

Category*	Citation of document, with indication, where appropriate, of the relevant passages	Relevant to claim No.
X	CN202165893U(JIANGXI LATTICE LIGHTING CO LTD), 14 Mar.2012(14.03.2012), the description paragraphs 4-35, figures 2-4	1-21
X	CN201992403U(CHANGZHOU JIAJIAAI OPTOELECTRONICS TECHN), 28.Sept.2011 (28.09.2011), the description paragraphs 3-23, figures 1-3	1-21
X	JP2010040496A(EMESEUEMTEK CO LTD et al),18 Feb.2010(18.02.2010), the description paragraphs 10-52, figures 1-6	1-21

Form PCT/ISA /210 (continuation of second sheet) (July 2009)

INTERNATIONAL SEARCH REPORT
Information on patent family members

International application No.
PCT/CN2012/073813

Patent Documents referred in the Report	Publication Date	Patent Family	Publication Date
CN201964257U	07.09.2011	无	
CN201539754U	04.08.2010	无	
CN202140824U	08.02.2012	无	
CN202165893U	14.03.2012	无	
CN201992403U	28.09.2011	无	
JP2010040496A	18.02.2010	KR20100018894A	18.02.2010

Form PCT/ISA /210 (patent family annex) (July 2009)

INTERNATIONAL SEARCH REPORT

International application No.
PCT/CN2012/073813

A. CLASSIFICATION OF SUBJECT MATTER

F21S 2/00(2006.01)i

F21V 3/00(2006.01)i

F21V 29/00(2006.01)i

F21V 23/00(2006.01)i

F21Y 101/02(2006.01)n