Trials@uspto.gov
571-272-7822

Paper 31
Entered: June 12, 2024

UNITED STATES PATENT AND TRADEMARK OFFICE

BEFORE THE PATENT TRIAL AND APPEAL BOARD

ZF NORTH AMERICA, INC. and ZF ACTIVE SAFETY US INC.,
Petitioner,

v.

STONERIDGE CONTROL DEVICES, INC.,
Patent Owner.

IPR2023-00273
Patent 7,021,415 B2

Before SCOTT C. MOORE, BARRY L. GROSSMAN and GEORGE R. HOSKINS, *Administrative Patent Judges.*

MOORE, *Administrative Patent Judge*.

JUDGMENT
Final Written Decision
Determining All Challenged Claims Unpatentable
35 U.S.C. § 318(a)
Denying in Part and Dismissing in Part Petitioner's Motion to Exclude Evidence
37 C.F.R. § 42.64

I. INTRODUCTION

Stoneridge Control Devices, Inc. ("Patent Owner") is the owner of U.S. Patent No. 7,021,415 B2 (Ex. 1001, "the '415 Patent"). ZF North America, Inc. and ZF Active Safety US Inc. (collectively "Petitioner") filed a Petition requesting an *inter partes* review of claims 1–25 of the '415 Patent. Paper 2 ("Pet."). Patent Owner disclaimed claims 1–4, 6, 9–13, and 20–23, eliminating those claims from the scope of this proceeding. *See* Ex. 2001. We instituted *inter partes* review of the remaining claims challenged in the Petition: claims 5, 7, 8, 14–19, 24, and 25. Paper 9.

After institution, Patent Owner filed a Response (Paper 12, "PO Resp."), Petitioner filed a Reply (Paper 18, "Pet. Reply"), and Patent Owner filed a Sur-Reply (Paper 20, "PO Sur-Reply"). Petitioner also filed a motion to exclude. Paper 23. Patent Owner filed an opposition to the motion to exclude (Paper 24), and Petitioner filed a reply (Paper 26). We held an oral hearing on March 6, 2024, a transcript of which is in the record. Paper 29 ("Hrg. Tr.").

We have jurisdiction under 35 U.S.C. § 6. This Final Written Decision is entered pursuant to 35 U.S.C. § 318(a). For the reasons below, we determine that Petitioner demonstrates by a preponderance of the evidence that challenged claims 5, 7, 8, 14–19, 24, and 25 are unpatentable as obvious under 35 U.S.C. § 103.

II. BACKGROUND

A. Related Matters

The '415 Patent is asserted in *Stoneridge Control Devices, Inc. v. ZF North America, Inc. et al.*, Case No. 2:22-cv-10289 (E.D. Mich., filed Feb. 11, 2022). Pet. v; Paper 6, 1.

B. The '415 Patent

The '415 Patent, titled "Electro-Mechanical Actuator for an Electrically Actuated Parking Brake," issued on April 4, 2006, from U.S. Application No. 10/712,764, filed November 13, 2003, as a continuation-in-part of U.S. Application No. 10/061,940, filed February 1, 2002. Ex. 1001, codes (22), (45), (54), (63). The '415 Patent expired on February 1, 2022.[1]

The '415 Patent is directed "to an actuator assembly for controlling . . . parking brake function within passenger vehicles." Ex. 1001, code (54), 1:21–22. According to the '415 Patent, "audible noise is a significant feature differentiating actuators in parking brake systems and many other actuation applications" (*id.* at 1:34–36) and there is a "need for a method of tuning the actuator for audible noise performance" (*id.* at 1:43–44). To address this need, the '415 Patent discloses an actuator including an isolator with an effective spring and damping constants coupled to a component (e.g., motor) to isolate it from the rest of the actuator. *Id.* at 1:56–61.

Figure 7 of the '415 Patent, reproduced below, is an exploded view of an exemplary actuator. Ex. 1001, 2:44–45.

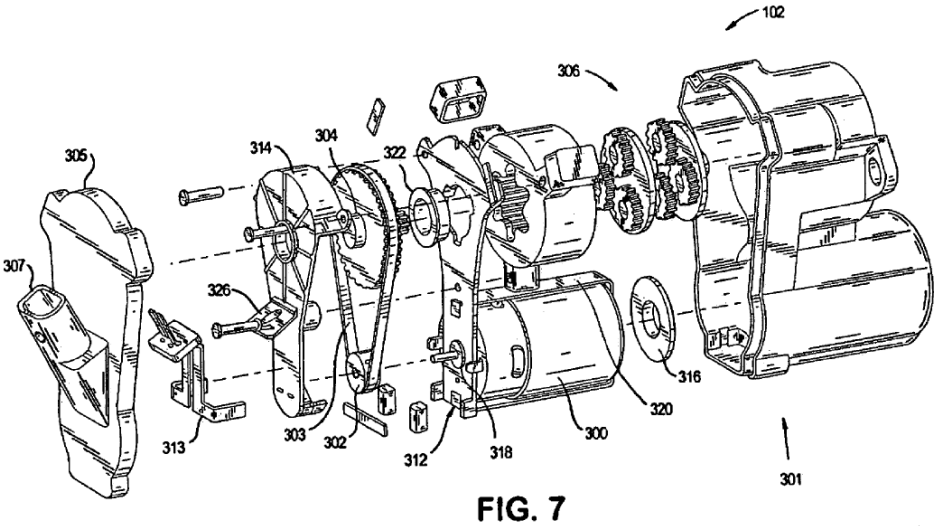

FIG. 7

[1] Both parties acknowledge the '415 Patent is expired. Pet. vi; Paper 7, 39.

Figure 7 shows the mechanical assembly of actuator 102, which includes motor 300 mounted to sub-frame 312 (e.g., mid plate). *Id.* at 4:23–25, 4:29–31. Motor 300 includes a shaft that carries drive pulley 302, which drives driven pulley 304 via drive belt 303. *Id.* at 4:31–34. Driven pulley 304 drives double planetary gear set 306 via a shaft that extends through sub-frame 312. *Id.* at 4:34–39. Housing top portion 305 is positioned on actuator housing 301 to substantially enclose the actuator. *Id.* at 4:55–58. Actuator 102 also includes output 308 (not shown in Figure 7) extending from actuator housing 301. *Id.* at Fig. 5, 4:16–22.

First isolation bushing 316 and second isolation bushing 318 may be provided at associated ends of motor 300 to prevent vibrations from being transmitted to other components of the actuator, and, thereby, reduce audible noise. *Id.* at 6:1–9. According to the '415 Patent, "the audible noise may be adjusted by selection of the isolation bushing material to provide appropriate spring and damping constants." *Id.* at 6:9–11.

C. Asserted Grounds

Petitioner asserts the following grounds of unpatentability for the challenged claims:[2]

[2] The Petition provides various grounds that apply only to disclaimed claims 1–4, 6, 9–13, and 20–23. *See* Pet. 15 (Grounds A, C, D, and F). As these claims are no longer part of this proceeding, we address only the asserted grounds that apply to remaining challenged claims 5, 7, 8, 14–19, 24, and 25. *See id.*

Ground[3]	Claims Challenged	35 U.S.C. §[4]	Reference(s)/Basis
1	5, 7, 8, 14–19	103(a)	Poertzgen[5], Boucheret[6]
2	5, 7, 8, 14–19	103(a)	Poertzgen, Boucheret, Drennen[7]
3	5, 7, 8, 14–19	103(a)	Poertzgen, Boucheret, Weiler[8]
4	24, 25	103(a)	Weiler
5	24, 25	103(a)	Weiler, Boucheret

In support of these challenges, Petitioner submits the initial and reply declarations of Dr. Bruno Lequesne. *See* Exs. 1002, 1021. Patent Owner submits declarations from Dr. Jeffrey Stein (Ex. 2005), Rolf Patrick (Ex. 2011), and Holly Stringfield (Ex. 2022).

D. Challenged Claims

Claims 5, 7, 8, 14–19, 24, and 25 are challenged in this proceeding. Claims 5, 8, 16, and 17 are independent. Claim 7 depends from, and thus incorporates, disclaimed independent claim 6. Claims 14 and 15 depend from, and thus incorporate, disclaimed independent claim 13. Claims 18 and

[3] For clarity, this decision will refer to the grounds in the Petition that pertain to the challenged claims (Grounds B, E, G, H, and I) as Grounds 1–5.
[4] The Leahy-Smith America Invents Act ("AIA") included revisions to 35 U.S.C. § 103 that became effective on March 16, 2013. We apply the pre-AIA version of § 103 here because the patent issued before the effective date of the AIA. *See* Ex. 1001, code (45).
[5] German Pat. No. 19732168 C1, issued Jan. 7, 1999 (Ex. 1008). Petitioner filed a certified English translation of Poertzgen as Exhibit 1007 ("Poertzgen").
[6] U.S. Pat. No. 6,098,948, issued Aug. 8, 2000 (Ex. 1010, "Boucheret").
[7] U.S. Pat. No. 6,390,247 B1, issued May 21, 2002 (Ex. 1011, "Drennen").
[8] PCT App. Pub. No. WO 00/61962, published Oct. 19, 2000 (Ex. 1013). Petitioner filed a certified English translation of Weiler as Exhibit 1012 ("Weiler").

19 depend from independent claim 17. Claims 24 and 25 depend from, and thus incorporate, disclaimed independent claim 20.

Claim 5, reproduced below with Petitioner's bracketed identifiers and formatting added (*see* Pet. 88), is illustrative of the challenged claims.

> 5. [5A] An electrically actuated parking brake system comprising:
> [5B] a vehicle power source;
> [5C] an electromechanical actuator comprising a motor having a drive shaft, a drive gear coupled to said drive shaft, a driven gear coupled to said drive gear,
> [5D] at least one planetary gear set coupled to said driven gear for driving an actuator output, and
> [5E] a sub-frame, said motor being mounted on said sub-frame,
> [5F] said actuator further comprising a component isolator having a spring constant and a damping constant, said isolator coupled between said motor and said sub-frame; and
> [5G] a brake caliper coupled to said actuator output, said actuator output being configured for driving said brake caliper between an engaged position and a released position.

Ex. 1001, 9:25–40.

Independent claim 8 is similar to claim 5, except that claim 8 recites that the isolator is "coupled between said sub-frame and a remainder of said actuator." Ex. 1001, 10:3–5. Independent claim 17 is similar to claim 5, except that claim 17 recites that the isolator is "disposed between said sub-frame and an actuator housing." Ex. 1001, 11:15–16.

Independent claim 16 is directed to "[a]n electro-mechanical actuator" including, similarly to claim 17, an isolator disposed between a sub-frame and an actuator housing. Ex. 1001, 10:64–11:5.

III. ANALYSIS

A. Burden of Proof

To prevail in its challenges, Petitioner must prove unpatentability by a preponderance of the evidence. 35 U.S.C. § 316(e) (2018); 37 C.F.R. § 42.1(d) (2018); *see also Harmonic Inc. v. Avid Tech., Inc.*, 815 F.3d 1356, 1363 (Fed. Cir. 2016) ("In an [*inter partes* review], the petitioner has the burden from the onset to show with particularity why the patent it challenges is unpatentable."). This burden of persuasion never shifts to Patent Owner.[9] *See Dynamic Drinkware, LLC v. Nat'l Graphics, Inc.*, 800 F.3d 1375, 1378 (Fed. Cir. 2015) (discussing the burdens of proof in an *inter partes* review).

B. Level of Ordinary Skill in the Art

The level of ordinary skill in the art is "a prism or lens" through which we view the prior art and the claimed invention. *Okajima v. Bourdeau*, 261 F.3d 1350, 1355 (Fed. Cir. 2001).

Petitioner asserts that a person of ordinary skill in the art "would have had a bachelor's degree (or equivalent) in mechanical engineering, electrical engineering, automotive engineering, or a similar discipline, and at least two years of experience with electromechanical devices such as actuators." Pet. 16 (citing Ex. 1002 ¶¶ 17–20).

Patent Owner "objects" to Petitioner's proposed formulation because "Petitioners include 'electrical engineering' as a degree that a person of ordinary skill in the art could hold," and because the "unrestricted reference to 'electromechanical devices'" is too broad. PO Resp. 14. In Patent Owner's view, an electrical engineering degree should not automatically

[9] Although occasionally we may focus on Patent Owner's arguments, we do not shift the ultimate burden from Petitioner. We focus on Patent Owner's arguments merely to identify issues in dispute.

qualify an individual as a person of ordinary skill in the art, and such a person also would have had specific experience with isolators. *See id.* Patent Owner accordingly proposes that one of ordinary skill in the art "would have had a bachelor's degree (or equivalent) in mechanical engineering, automotive engineering, or a similar discipline, and at least two years of experience with vibration isolation, vibration damping, or noise attenuation in the context of mechanical or electromechanical systems." *Id.* at 15.

Both parties agree that one skilled in the relevant art would have had a bachelor's degree in a relevant engineering discipline, plus at least two years of experience with what each believes to be the relevant technology. Though Patent Owner objects to explicitly listing a bachelor's degree in electrical engineering as a qualifying educational background, its proposed formulation includes open-ended language (i.e., "or a similar discipline") that is broad enough to encompass electrical engineering degrees. Patent Owner also concedes that Dr. Lequesne, who has a bachelor's degree in electrical engineering, is qualified to give testimony from the perspective of one of ordinary skill in the art. *See* Hrg. Tr. 36:9–21. Accordingly, it does not appear that there is a substantive dispute regarding the educational requirements that is relevant to this proceeding.

As to the necessary experience, Petitioner correctly points out that "most" claims of the '415 Patent do not recite isolators or require attenuation or damping. Pet. Reply 23. However, the challenged independent claims (claims 5, 8, 16, and 17) all recite at least an isolator with a damping coefficient, and the '415 Patent repeatedly mentions noise attenuation as being a goal of the claimed invention. *See, e.g.*, Ex. 1001, 1:53–55, 5:33–56. Patent Owner's proposal also uses the disjunctive "or," and thus is broad

enough to encompass individuals having two years of total experience in any one or more of vibration isolation, vibration damping, or noise attenuation.

On this record, we adopt Patent Owner's proposal, and determine that one of ordinary skill in the art to which the '415 Patent pertains would have had a bachelor's degree (or equivalent) in mechanical engineering, automotive engineering, or a similar discipline, and at least two years of experience with vibration isolation, vibration damping, or noise attenuation in the context of mechanical or electromechanical systems. We find that this formulation is consistent with the level of skill reflected in the cited prior art references. *See Okajima*, 261 F.3d at 1355. We note, however, that none of the issues in this case appears to turn on differences between the parties' proposed formulations, and that all of the findings and conclusions set forth below would have remained the same had we instead adopted Petitioner's proposed formulation.

C. Claim Construction

We apply "the same claim construction standard that would be used to construe the claim in a civil action under 35 U.S.C. [§] 282(b)." 37 C.F.R. § 42.100(b). Thus, the *Phillips* claim construction standard applies in this case. *See Phillips v. AWH Corp.*, 415 F.3d 1303 (Fed. Cir. 2005) (en banc). Under *Phillips*, words of a claim generally are given their ordinary and customary meaning. *Phillips*, 415 F.3d at 1312. "[T]he ordinary and customary meaning of a claim term is the meaning that the term would have to a person of ordinary skill in the art in question at the time of the invention." *Id.* at 1313. "[T]he person of ordinary skill in the art is deemed to read the claim term not only in the context of the particular claim in which the disputed term appears, but in the context of the entire patent, including the specification." *Id.*

"[W]e need only construe terms 'that are in controversy, and only to the extent necessary to resolve the controversy.'" *Nidec Motor Corp. v. Zhongshan Broad Ocean Motor Co.*, 868 F.3d 1013, 1017 (Fed. Cir. 2017) (quoting *Vivid Techs., Inc. v. Am. Sci. & Eng'g, Inc.*, 200 F.3d 795, 803 (Fed. Cir. 1999)). In this case, the parties dispute the meanings of the claim terms "sub-frame" and "actuator housing." *See* PO Resp. 16–21.

"Sub-Frame"

Patent Owner asserts that a sub-frame is "a frame for a sub-assembly." PO Resp. 16. Patent Owner additionally argues that the specification of the '415 Patent limits the claim term sub-frame to a structure that "is distinct from the actuator housing, which is an outer casing of the actuator." *Id.* Petitioner agrees that a sub-frame is "a frame for a subassembly." *See* Pet. Reply 13; Hrg. Tr. 13:7–12. Petitioner, however, does not agree "that a sub-frame must also be 'distinct from the actuator housing.'" Pet. Reply 13.

We begin our analysis of this dispute by looking at the language of the claims themselves. *See Vitronics Corp. v. Conceptronic, Inc.*, 90 F.3d 1576, 1582 (Fed. Cir. 1996). In so doing, we note that Patent Owner is correct in asserting that certain claims recite a vibration isolator disposed between a sub-frame and an actuator housing. *See* Ex. 1001, Claims 16, 17; PO Resp. 17. Other challenged claims, however, do not contain any limitations that pertain to an actuator housing. *See* Ex. 1001, claims 5, 7, 8. Patent Owner's proposed construction, thus, would incorporate new limitations pertaining to an actuator housing into at least claims 5, 7, and 8.

Next, we turn to the specification. *See Vitronics*, 90 F.3d at 1582. In so doing, we note that it is generally improper to incorporate limitations from the specification into the claims because 35 U.S.C. § 112 "requires that the claims themselves set forth the limits of the patent grant, [and] also

because persons of ordinary skill in the art would rarely confine their definitions of terms to the exact representations depicted in the embodiments." *Phillips*, 415 F.3d at 1323. There are, of course, exceptions. A specification may contain a "special definition given to a claim term by the patentee that differs from the meaning it would otherwise possess." *Akamai Techs., Inc. v. Limelight Networks, Inc.*, 805 F.3d 1368, 1375 (Fed. Cir. 2015). But any such special definition must "clearly redefine a claim term 'so as to put a reasonable competitor or one reasonably skilled in the art on notice that the patentee intended to so redefine the claim term.'" *Elekta Instrument S.A. v. O.U.R. Scientific Int'l, Inc.*, 214 F.3d 1302, 1307 (Fed. Cir. 2000) (quoting *Process Control Corp. v. Hydreclaim Corp.*, 190 F.3d 1350, 1357 (Fed. Cir. 1999)). The specification also may "reveal an intentional disclaimer, or disavowal of claim scope by the inventor." *Phillips*, 415. F.3d at 1316. But any such disclaimer "must be clear." *Conoco, Inc. v. Energy & Envtl. Int'l, L.C.*, 460 F.3d 1349, 1357 (Fed. Cir. 2006).

Patent Owner is correct in its assertion that the specific embodiments disclosed in the '415 Patent specification have separate sub-frames and actuator housings. *See* PO Resp. 16–17 (citing Ex. 1001, 4:44–54, 6:36–54). But the specification also makes clear that the applicant intended for these embodiments not to be construed as limiting the scope of the claims. *See* Ex. 1001, 8:36–42 (clarifying that the disclosed embodiments "are set forth here by way of illustration but not of limitation"). Patent Owner identifies nothing in the specification that rises to level of a definition or clear and intentional disclaimer or disavowal of claim scope, and we see no such definition or disclaimer in the specification. Patent Owner's reliance on *In re Smith Int'l, Inc.*, 871 F.3d 1375 (Fed. Cir. 2017), is also misplaced. *In re*

Smith pertained to the construction of the claim limitation "body" under the broadest reasonable interpretation standard—a standard that does not apply in this case. *See id.* at 1381–82. Moreover, the claim construction at issue in *Smith* was so broad that the Federal Circuit characterized it as "generic." *See id.* at 1382. Here, the parties agree that the claim term sub-frame has a specific meaning: a frame for a sub-assembly. *See* PO Resp. 16; Pet. Reply 13; Hrg. Tr. 13:7–12. Nothing in *Smith* requires or suggests that under the *Phillips* standard, we must interpret the non-generic claim term "sub-frame" in a way that would incorporate new limitations pertaining to an actuator housing into claims that do not even mention an actuator housing.

On this record, we construe "sub-frame" as "a frame for a sub-assembly." We reject Patent Owner's contention that a sub-frame must necessarily be a component that is distinct from an actuator housing.

"Actuator Housing"

Patent Owner asserts that the claim limitation "actuator housing" means "an outer casing of the actuator." PO Resp. 19. Patent Owner further asserts that the term actuator housing "should not be construed to cover a brake caliper, because the specification consistently refers to actuator housings as structures that are distinct from brake calipers, and because at least some claim terms use the terms separately to refer to different structures." *Id.* Petitioner does not dispute that an actuator housing is "an outer casing of the actuator," but objects to Patent Owner's attempt to further argue that an actuator housing cannot be part of a brake caliper. *See* Pet. Reply 19–20.

Turning first to the claim language, Patent Owner is correct that certain challenged claims recite both a caliper and an actuator housing. *See* Ex. 1001, claims 17–19. Those claims, however, do not require or exclude

any particular structural relationship between the recited brake caliper and the separately recited actuator housing. *See id.* Other challenged claims recite an actuator housing but not a caliper. *See* Ex. 1001, claims 16, 24, 25. Patent Owner's proposed construction, thus, would incorporate new limitations pertaining to a brake caliper into at least claims 16, 24, and 25. Patent Owner's proposal would also improperly incorporate new limitations into claims 17–19 precluding any part of the brake caliper from serving as part of an actuator housing. *See, e.g., Google LLC v. EcoFactor, Inc.*, 92 F.4th 1049, 1058 (Fed. Cir. 2024) (holding that separately recited inputs did not need to be "entirely separate and distinct" because the claim "language places no constraint on the manner in which the inputs are used" and "[t]he specification contains no restrictive language and does not explicitly require that the claim inputs be separate").

Moving to the specification, Patent Owner is correct that the specific embodiments disclosed in the '415 Patent have actuator housings that are structurally separate from the disclosed brake calipers. *See* PO Resp. 17–18. But the specification also makes clear that the applicant intended for these embodiments not to be construed as limiting the scope of the claims. *See* Ex. 1001, 8:36–42. Patent Owner identifies nothing in the specification that rises to level of a definition or clear and intentional disclaimer or disavowal of claim scope, and we see no such definition or disclaimer in the specification. Patent Owner's citations to *In re Smith* are unavailing for substantially the same reasons described above with respect to the "sub-frame" claim limitation.

On this record, we agree with Patent Owner's contention that an "actuator housing" is "an outer casing of the actuator," and adopt this as our

construction. We reject Patent Owner's further contention that no portion of a brake caliper may form part of an actuator housing.

D. The Credibility of Petitioner's Declarant, Dr. Lequesne

Patent Owner argues in its Response that "Dr. Lequesne is not a [person of ordinary skill in the art] under Patent Owner's definition." PO Resp. 15. However, as noted above, Patent Owner does not dispute that Dr. Lequesne is qualified to give testimony from the perspective of one of ordinary skill in the art. *See* Hrg. Tr. 36:9–21.

Patent Owner also argues that "[a]lthough Dr. Lequesne has commendable credentials in the electrical engineering space, they are not in an area relevant to this matter," which "is about vibration isolators and noise attenuation, an area where Patent Owner's declarant, Dr. Stein, is an expert." PO Resp. 3–4; *see also* PO Sur-Reply 19. Patent Owner argues that "Dr. Lequesne's testimony in this case should be weighted according to Dr. Lequesne's experience level with noise vibration and damping, which is minimal." PO Resp. 15 (citing PTAB Consolidated Trial Practice Guide 34 (Nov. 2019), https://www.uspto.gov/TrialPracticeGuideConsolidated); *see also* PO Sur-Reply 19 ("Patent Owner maintains that Dr. Lequesne's testimony should be weighted according to his experience with vibration damping for actuators, which is minimal.").

We decline to find Dr. Lequesne less credible based solely on his electrical engineering degree and relative level of experience with noise vibration and damping. As noted above, Patent Owner does not dispute that Dr. Lequesne is qualified to give testimony from the perspective of one of ordinary skill in the art. Petitioner asserts, and Patent Owner does not dispute, that "Dr. Lequesne has spent his 40-year career as a designer in the automotive industry, has worked on EPBA [electronic parking brake

actuator] systems, and also has vast experience with electromechanical actuators and NVH [noise, vibration, and harshness]." Pet. Reply 24 (citing Ex. 1002 ¶¶ 7–9; Ex. 2007, 10:6–17, 11:21–16:3, 20:3–31:8; Ex. 1023). On this record, we find Dr. Lequesne qualified to provide expert testimony on the subject matter of the challenged claims of the '415 Patent and asserted prior art references because he has a degree in electrical engineering, which is a "similar discipline," and at least two years of experience with "vibration isolation, vibration damping, or noise attenuation in the context of mechanical or electromechanical systems." *See supra* § III.B; Ex. 1002 ¶¶ 4–12 (outlining Dr. Lequesne's education and experience); Hrg. Tr. 36:9–21 (Patent Owner's counsel conceding that Dr. Lequesne is qualified to provide expert testimony).

In judging the credibility of competing witnesses, we have weighed their testimony, taking into account the witnesses' different educational qualifications and experiential backgrounds as they pertain to the '415 Patent, as well as whether the witnesses offer corroboration for their opinions, and whether those opinions are consistent with the '415 Patent, the prior art, and their cross-examination testimony.

E. Secondary Considerations

Patent Owner contends that non-obviousness is supported by evidence of copying, industry praise, and commercial success. PO Resp. 60–63; PO Sur-Reply 22–23. Petitioner argues that Patent Owner has not established a nexus between its evidence of non-obviousness and the claimed invention. Pet. Reply 25–27.

As explained by the Federal Circuit,

> [f]or objective evidence of secondary considerations to be relevant, there must be a nexus between the merits of the claimed

> invention and the objective evidence. *See In re GPAC*, 57 F.3d 1573, 1580 (Fed. Cir. 1995). A showing of nexus can be made in two ways: (1) via a presumption of nexus, or (2) via a showing that the evidence is a direct result of the unique characteristics of the claimed invention.
>
> A patent owner is entitled to a presumption of nexus when it shows that the asserted objective evidence is tied to a specific product that "embodies the claimed features, and is coextensive with them." *Brown & Williamson Tobacco Corp. v. Philip Morris, Inc.*, 229 F.3d 1120, 1130 (Fed. Cir. 2000).

Volvo Penta of the Americas, LLC v. Brunswick Corp., 81 F.4th 1202, 1210 (Fed. Cir. 2023).

Patent Owner asserts that in 2003, Patent Owner gave one of Petitioner's real parties-in-interest a presentation describing "a prototype design embodying the invention of the '415 Patent." PO Resp. 60 (citing Ex. 2012, 1; Ex. 2011 ¶ 4). Patent Owner argues that Petitioner then "copied Patent Owner's design" and "later introduced an updated design with a sub-frame and vibration isolators." *Id.* at 60–61 (citing Ex. 2016; Ex. 2005 ¶ 163). Patent Owner also argues that "[t]he copied design was lauded by Petitioners as a 'great success story' as Petitioners went on to sell over 200 million units." *Id.* at 4 (citing Ex. 2010); *see also id.* at 61–63 (discussing its evidence of industry praise and commercial success). Patent Owner argues that "a nexus should be presumed because each of the accused devices at issue are coextensive with at least one independent claim of the '415 Patent." PO Resp. 62 (citing Ex. 2016; Ex. 2005 ¶ 166; *Brown & Williamson*, 229 F.3d at 1130.

Petitioner contends that Patent Owner "never links its evidence [of copying, praise, and commercial success] to the claimed invention." Pet. Reply 25. As for Patent Owner's evidence of copying, Petitioner argues that

"there is no nexus linking the '415 patent claims to the presentation, no evidence that whomever saw the presentation designed the accused products, and no analysis showing that the accused products copy the design from the presentation." *Id.* As for Patent Owner's evidence of industry praise, Petitioner argues that the press release (Ex. 2010) Patent Owner relies on "nowhere singles out any particular EPBA, much less any *claimed* features of EPBAs" and that "[t]here is no support for [Patent Owner]'s expert's statement that Ex. 2010 'constitutes praise for the invention of the '415 patent.'" *Id.* at 25–26 (quoting Ex. 2005 ¶ 165). As for Patent Owner's evidence of commercial success, Petitioner argues that "[n]either [Patent Owner nor its expert] offers any analysis to justify the conclusion" that "the accused devices 'are coextensive' with the claims." *Id.* at 27 (quoting PO Resp. 62).

We agree with Petitioner that Patent Owner's purported evidence of copying, industry praise, and commercial success lacks nexus to the claimed invention. To show that the accused devices at issue, i.e., the purportedly copied, praised, and commercially successful products sold be Petitioner, are coextensive with at least one independent claim of the '415 Patent, Patent Owner relies on the claim charts shown in Exhibit 2016. PO Resp. 62; Ex. 2005 ¶¶ 163–166. Patent Owner identifies those charts as "Exhibits A and B from Patent Owner's Infringement Contentions, served in *Stoneridge Control Devices, Inc. v. ZF North America, Inc. et al.*, U.S. District Court for the Eastern District of Michigan, Case No. 2:22cv10289." *Id.* at viii. As such, the claim charts are apparently attorney argument summarizing Patent Owner's allegations in the district court, not substantive evidence. *See Icon Health & Fitness, Inc. v. Strava, Inc.*, 849 F.3d 1034, 1043 (Fed. Cir. 2017) ("Attorney argument is not evidence."). Patent Owner's attempt to

cite the claim charts for their substantive comparisons of accused devices to challenged claims also constitutes an improper incorporation by reference. *See* 37 C.F.R. § 42.6(a)(3) ("Arguments must not be incorporated by reference from one document into another document."); PTAB Consolidated Trial Practice Guide 35–36; *Cisco Sys., Inc. v. C-Cation Techs., LLC*, IPR2014-00454, Paper 12 at 8–10 (PTAB Aug. 29, 2014) (informative).

Moreover, Dr. Stein's declaration lacks any explanation or analysis to support his belief that "there is a component in each of the photographed products" in the claim charts "that corresponds to each one of the claim elements," his "overall agreement with the positions taken in the claim charts," or his "understand[ing]" that the accused devices "in Ex. 2016 are co-extensive in scope with the '415 Patent." Ex. 2005 ¶¶ 163, 166. Dr. Stein's declaration merely repeats, in conclusory fashion, that there is a nexus between the accused devices and the claimed invention, and is thus insufficient to establish a nexus. *See Bosch Auto. Serv. Sol., LLC v. Matal*, 878 F.3d 1027, 1037 (Fed. Cir. 2017) ("As the Board recognized, however, the Pierce declaration lacks any explanation or analysis to support his asserted 'understand[ing]' that these commercial reset tools are covered by, or coextensive with, the claims of the '796 patent. The Board permissibly concluded that this conclusory testimony lacks foundation."); *In re Cree, Inc.*, 818 F.3d 694, 703–04 (Fed. Cir. 2016) ("We agree with the Board that Dr. Brandes' declaration merely repeats, in conclusory fashion, that there is a nexus between the success of white LEDs and the claimed invention."). Patent Owner has thus failed to make a sufficient showing to establish a presumption of nexus.

Patent Owner also does not attempt to establish nexus by arguing that its secondary considerations evidence is a direct result of the unique characteristics of the claimed invention.

For the reasons explained above, we conclude that Patent Owner's evidence purportedly showing copying, industry praise, and commercial success is entitled to little weight in our obviousness analysis because Patent Owner has not shown a sufficient nexus between the evidence presented and the invention claimed in any of the challenged claims.

F. Obviousness under 35 U.S.C. § 103

An invention is not patentable under 35 U.S.C. § 103 "if the differences between the subject matter sought to be patented and the prior art are such that the subject matter as a whole would have been obvious at the time the invention was made to a person having ordinary skill in the art to which said subject matter pertains." The question of obviousness is resolved on the basis of underlying factual determinations including: (1) the scope and content of the prior art; (2) any differences between the claimed subject matter and the prior art; (3) the level of skill in the art; and, (4) where in evidence, so-called secondary considerations, including commercial success, long-felt but unsolved needs, and failure of others. *Graham v. John Deere Co.*, 383 U.S. 1, 17–18 (1966).

When evaluating a combination of teachings, we must also "determine whether there was an apparent reason to combine the known elements in the fashion claimed by the patent at issue." *KSR Int'l Co. v. Teleflex Inc.*, 550 U.S. 398, 418 (2007) (citing *In re Kahn*, 441 F.3d 977, 988 (Fed. Cir. 2006)).

1. *Ground 1: Obviousness of Claims 5, 7, 8, and 14–19 Over Poertzgen and Boucheret*

a) *Summary of Poertzgen*

Poertzgen is directed to "a hydraulic vehicle brake." Ex. 1007, 2:2. Poertzgen explains that "[t]he underlying task of the invention is to provide a hydraulic vehicle brake that can be used both as a service brake and a parking brake, and the design of which is more compact than that of the [prior art] vehicle brake." *Id.* at 2:12–13. Poertzgen describes that the hydraulic vehicle brake has a space-saving arrangement including a reduction gear connected between an electric motor and a spindle. *Id.* at 2:20–23.

Figure 1 of Poertzgen, reproduced below, is a partial section view of an exemplary hydraulic vehicle parking brake. Ex. 1007, 7:4–5.

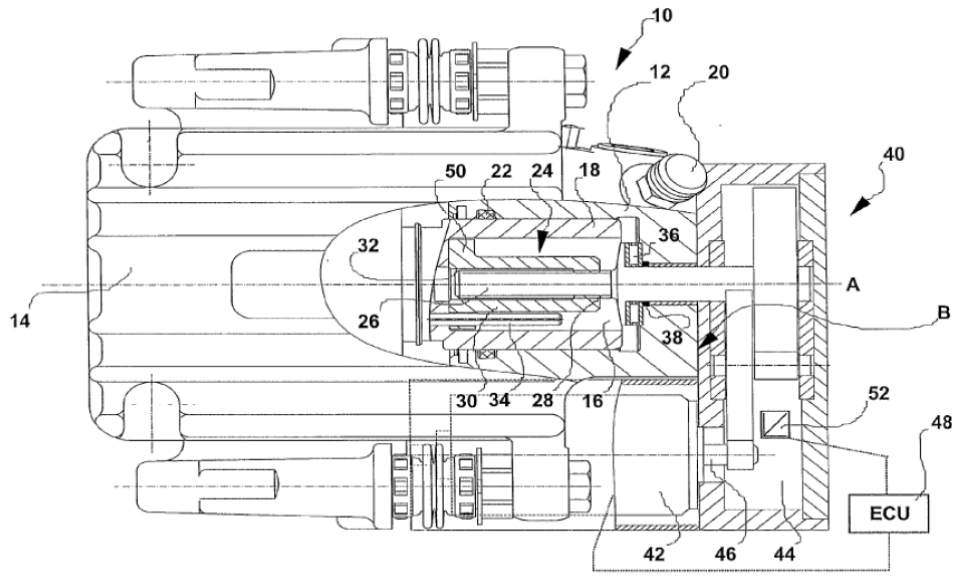

Fig. 1

Figure 1 shows vehicle brake 10 including housing 12 with an integrally-formed floating caliper 14 that straddles a brake disk (not shown). *Id.* at 7:8–10. Vehicle brake 10 includes spindle/nut arrangement 24 that converts rotational movement of spindle 26, which is arranged coaxial to axis A and

includes male thread 28, into translational movement of nut 30, which includes a corresponding female thread 32. *Id.* at 7:26–34. Spindle 26 is rotationally-driven by unit 40, which is a subassembly including electric motor 42 driving reduction gears 44 via driveshaft 46. *Id.* at 8:5–7, 8:9–11; *see also id.* at 2:31–33 (describing that the reduction gear may be a planetary gear). In order to lock vehicle brake 10, electronic control unit 48 drives electric motor 42 so that output shaft 46 rotates reduction gear 44 and spindle 26 in a first direction. *Id.* at 8:17–21. Rotating spindle 26 causes nut 30 to move linearly along axis A, and annular flange 50 contacts brake piston 18 and forces it to engage friction pads and the brake disk (not shown). *Id.* at 8:21–24. Electric motor 42 can be switched off, and spindle/nut arrangement 24 will maintain its position due to male thread 28 and female thread 32 being self-locking. *Id.* at 8:24–27.

b) Summary of Boucheret

Boucheret is directed to "a device for the resilient fastening of an electric motor within a housing, especially one adapted to supply an electric current to a motorised fan unit in a motor vehicle." Ex. 1010, 1:6–9. Boucheret describes, in particular, "a fastening device for a motor having radial fastening lugs which receive damping elements adapted to be lodged within matching cavities defined within the housing." *Id.* at 1:10–13.

Figure 3 of Boucheret, reproduced below, shows an exemplary fastening device. Ex. 1010, 2:54–56.

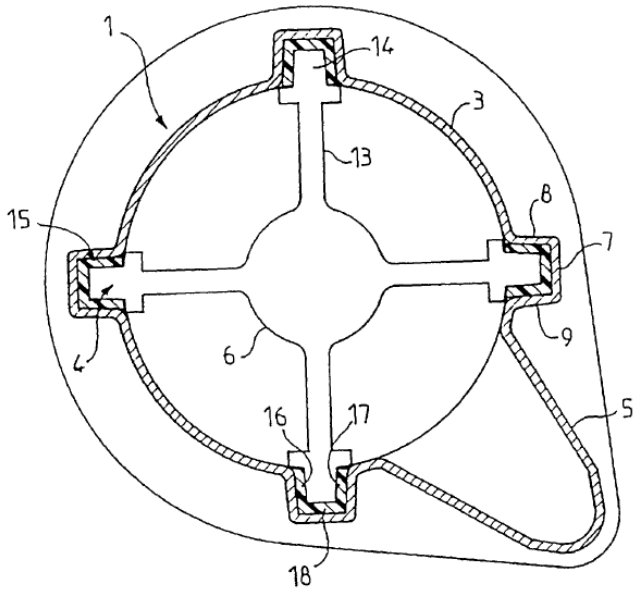

FIG. 3

Figure 3 depicts housing 1, which includes side surface 3 having four cavities 4 projecting radially outward. Ex. 1010, 2:62–3:2. Motor 6 is equipped with four fastening lugs 13 extending radially and comprising end portions 14 having a shape that matches cavities 4. *Id.* at 3:11–14. Each end portion 14 includes removable damping element 15 comprising resilient material. *Id.* at 3:15–19. Damping elements 15 serve as vibration dampers between electric motor 6 and housing 1. *Id.* at 3:20–22.

c) Analysis of Claim 5

Petitioner contends that the combination of Poertzgen and Boucheret renders obvious independent claim 5. Pet. 40–42. Petitioner's contentions are supported by testimony from Dr. Lequesne. Ex. 1002 ¶¶ 174–182; Ex. 1021 ¶¶ 2–18.

[5A] An electrically actuated parking brake system

Petitioner contends that Poertzgen discloses an electrically actuated parking brake system of the type recited in the preamble of claim 5. Pet. 30–

31 (citing Ex. 1007, code (57), 2:2–30, 4:30–5:10, 6:7–13, 7:26–8:32, Fig. 1; Ex. 1002 ¶ 87).[10]

Patent Owner does not dispute Petitioner's assertion based on Poertzgen as to the preamble [5A]. *See* PO Resp. 29–40. On this record, we are persuaded that Poertzgen discloses the preamble of claim 5.

[5B] a vehicle power source;

Petitioner contends that Poertzgen's control unit 48 and electric motor 42 are both powered by a "a vehicle power source," as recited in claim 5. Pet. 17–18 ("Having an electric control unit activating an electric motor and controlling its direction teaches to a POSA that there is a power source for the motor and its control unit.") (citing Ex. 1007, code (57), 2:2–30, 4:30–5:10, 6:7–13, 7:26–8:32, Fig. 1; Ex. 1002 ¶¶ 88–90).

Patent Owner does not dispute Petitioner's assertion based on Poertzgen as to limitation [5B]. *See* PO Resp. 29–40. On this record, we are persuaded that Poertzgen discloses this limitation of claim 5.

[5C] an electromechanical actuator comprising a motor having a drive shaft, a drive gear coupled to said drive shaft, a driven gear coupled to said drive gear,

Petitioner contends that Poertzgen's electric motor 42 (with output shaft 46) is "an electromechanical actuator comprising a motor having a drive shaft," and output shaft 46 drives reduction gear 44. Pet. 18 (citing

[10] The discussion of claim 5 in the Petition refers back to earlier sections of the Petition discussing similar limitations appearing in disclaimed claims 2, 3, and 6. *See* Pet. 40–41 (asserting that various limitations recited in claim 5 are "identical" to limitations recited in claims 2, 3, and 6, which Patent Owner subsequently disclaimed (*see* Ex. 2001)). Accordingly, our analysis of Petitioner's contentions for claim 5 necessarily includes citations to portions of the Petition addressing disclaimed claims 2, 3, and 6, despite the fact that these claims are not part of this proceeding.

Ex. 1007, code (57), 2:18–3:8, 8:5–8:32, Fig. 1). Petitioner contends that Poertzgen's reduction gear 44 preferably includes a belt gear or toothed-belt gear. *Id.* at 18–19 (citing Ex. 1007, 2:31–3:8; Ex. 1002 ¶¶ 93–94); *see also id.* at 19 (contending that one of ordinary skill in the art "would have understood that both the preferred belt gear or toothed-belt gear include a drive gear and a driven gear coupled via a drive belt"). According to Petitioner, one of ordinary skill in the art "would have appreciated that Poertzgen teaches that the motor output shaft 46 rotates the drive gear of the belt gear (the '*drive gear coupled to said drive shaft*') that in turn rotates the driven gear of the belt gear (the '*driven gear coupled to said drive gear*')." *Id.* Petitioner also contends that, because "the brake is actuated using the electric motor 42 which drives the various gears 44, Poertzgen also discloses the recited *electromechanical actuator*." *Id.* at 20 (citing Ex. 1002 ¶ 96).

Patent Owner does not dispute Petitioner's assertions based on Poertzgen as to limitation [5C]. *See* PO Resp. 29–40. On this record, we are persuaded that Poertzgen discloses this limitation of claim 5.

> *[5D] at least one planetary gear set coupled to said driven gear for driving an actuator output, and*

Petitioner contends that Poertzgen's reduction gear 44 is preferably arranged in two stages including a belt gear and a planetary gear, which may be upstream or downstream of the belt gear. Pet. 21 (citing Ex. 1007, 2:31–3:8). Petitioner contends that Poertzgen discloses an embodiment in which "electric motor 42 drives a belt gear as a first stage of reduction gear 44, the belt gear comprising a drive gear and a driven gear coupled together via a belt," and "the driven belt gear in turn drives a planetary gear set, as a second stage of reduction gear 44 (the recited '*at least one planetary gear set coupled to said driven gear*')." *Id.* (citing Ex. 1002 ¶ 101). Petitioner

also contends that Poertzgen's electric motor 42 and reduction gear 44 together form a subassembly (unit 40) that "provides an output that rotates spindle 26, which is what causes nut 30 to move and close and open the brake caliper." *Id.* (citing Ex. 1007, 7:26–8:32). According to Petitioner, unit 40 provides an "actuator output," as recited in claim 5. *Id.* at 22 (citing Ex. 1002 ¶¶ 102–104).

Patent Owner does not dispute Petitioner's assertions based on Poertzgen as to limitation [5D]. *See* PO Resp. 29–40. On this record, we are persuaded that Poertzgen discloses this limitation of claim 5.

> *[5E] a sub-frame, said motor being mounted on said sub-frame,*

Petitioner contends that Poertzgen's motor 42 and reduction gear 44 together comprise a subassembly (unit 40) that can be manipulated independently and attached to various brakes to be actuated. Pet. 24 (citing Ex. 1007, code (57), 2:24–30, 8:5–16). Petitioner contends that "motor 42 and reduction gear 44 are mounted on a sub-frame that allow[s] them to be separately handled, apart from the remainder of the braking system shown in Figure 1." *Id.* (citing Ex. 1002 ¶ 115). Poertzgen's Figure 1, as annotated by Petitioner, is reproduced below.

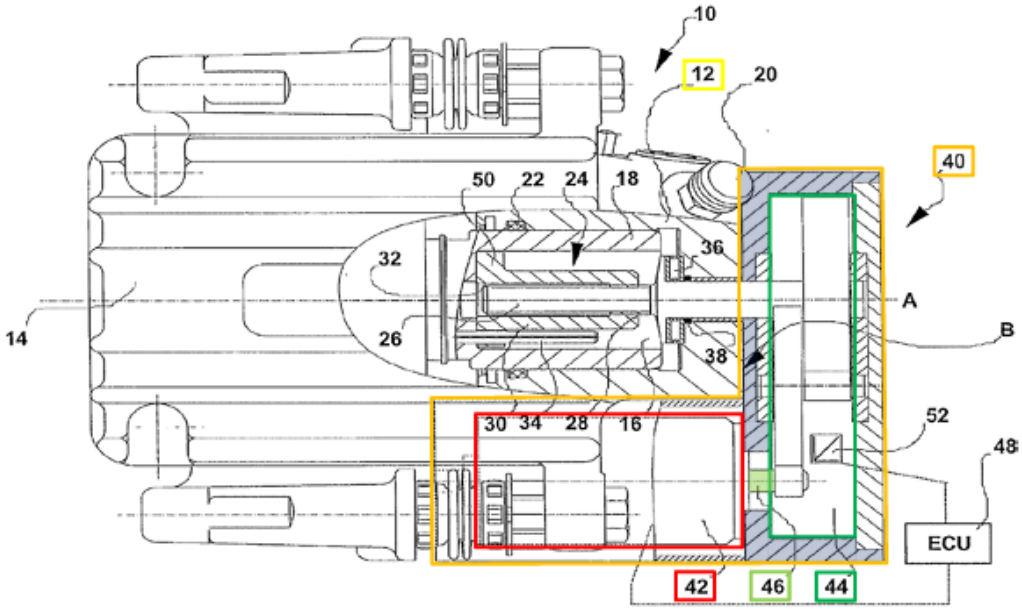

Ex. 1007, Figure 1 (annotated).

Id. at 24. Referring to annotated Figure 1 of Poertzgen, above, Petitioner contends that "part of the unit 40 (annotated in **orange**) has a plate (**gray**) between the motor and the gears through which the driveshaft 46 (**light green**) passes (all or part of which is the recited '*sub-frame*'), to which the motor 42 and gears 44 are mounted." *Id.* at 25 (citing Ex. 1002 ¶¶ 116–120).

Patent Owner argues that claim 5 would not have been obvious "because Poertzgen lacks a 'sub-frame' that is distinct from an actuator housing." PO Resp. 38 (citing Ex. 2005 ¶¶ 126, 127). Referring to Petitioner's annotated Figure 1 of Poertzgen, shown above, Patent Owner argues that "the alleged sub-frame (Petitioners have colored the alleged sub-frames grey) is just a portion of the alleged actuator housing (Petitioners have colored it yellow)," even though the claimed "sub-frame must be a separate structure from the actuator housing." *Id.* at 39.

Patent Owner's argument is not persuasive because, as discussed above, we reject Patent Owner's claim construction contention that a sub-

frame must be a component that is distinct from an actuator housing. *See supra* § III.C. Patent Owner identifies nothing in the '415 Patent specification that rises to the level of a definition or clear and intentional disclaimer or disavowal of claim scope, and we see no such definition or disclaimer in the specification. *See id.* On this record, we are persuaded that Poertzgen discloses this limitation of claim 5. *See* Pet. 23–25.

> *[5F] said actuator further comprising a component isolator having a spring constant and a damping constant, said isolator coupled between said motor and said sub-frame; and*

Petitioner contends that Poertzgen's "Figure 1 shows a narrow rectangle between the motor 42 and the plate to which the motor is attached," but "Poertzgen does not explicitly describe this as an isolator." Pet. 35. However, relying on the testimony of Dr. Lequesne, Petitioner contends that "it was within the general knowledge in the art that the transmission of NVH could be reduced by placing an isolator or damping element between automotive components," and "[t]he simplest such isolators are passive elastic members placed between components to act as cushions and dampen NVH." *Id.* (citing Ex. 1014,[11] 198; Ex. 1002 ¶¶ 159–160).

Petitioner also contends that "Boucheret discloses a housing 1 for an electric motor 6, wherein damping members (essentially elastic cushions) 15 are coupled between the motor and the motor housing." Pet. 35 (citing Ex. 1010, code (57), 1:5–64, 2:30–34, 3:11–40, 4:27–56, Figs. 1–4; Ex. 1002 ¶¶ 161–162). Petitioner contends that one of ordinary skill in the art "would have been motivated to combine the idea of a resilient isolator as

[11] Julian Happian-Smith, *An Introduction to Modern Vehicle Design* (2001) (Ex. 1014, "Happian-Smith").

taught in Boucheret with the motor mount of Poertzgen so that the isolator is coupled between the motor and a remainder of the actuator or parking brake system, so as to dampen NVH coming from the motor." *Id.* at 36–37. Petitioner reasons that

> [p]lacing a resilient isolator between an electric motor (indeed, any component that might have NVH) and the components to which it is mounted or abuts is nothing more than the use of a known technique (having an isolator between components to reduce NVH) to improve a similar device (Poertzgen's actuator which has a motor mounted to other actuator components) in the same way (NVH is dampened).

Id. at 37 (citing Ex. 1002 ¶ 164). Petitioner also contends that one of ordinary skill in the art would appreciate that the benefit of reducing NVH taught by Boucheret would also apply to Poertzgen, as each reference relates to electric motor actuators used in vehicles and recognizes the benefits of NVH reduction. *Id.* (citing Ex. 1007, 2:12–3:8; Ex. 1010, 1:5–64, 3:20–22, 4:27–56). According to Petitioner, "the use of isolators between components to reduce NVH was well within the general knowledge of the [person of ordinary skill in the art (POSA or POSITA)] and thus, the POSA would have a reasonable expectation of success in applying an isolator to Poertzgen." *Id.* (citing Ex. 1002 ¶ 165).

In opposing Petitioner's contentions, Patent Owner argues that "Petitioners never allege that Poertzgen needs a reduction in NVH." PO Resp. 30. Patent Owner's argument is unavailing. Petitioner sets forth in the petition that "[a] POSA would have been motivated to combine the idea of a resilient isolator as taught in Boucheret with the motor mount of Poertzgen so that the isolator is coupled between the motor and a remainder of the actuator or parking brake system, so as *to dampen NVH coming from the motor*" of Poertzgen. Pet. 36–37 (emphasis added); *see also* Ex. 1002

¶ 164. Petitioner points out that "Poertzgen discusses the noise generated by its electric motor." Pet. Reply 11 (citing Ex. 1007, 3:6–8). Petitioner also points out that "[a] POSITA knew that rotating parts, such as motors and gears, generate unwanted NVH." *Id.* at 10 (citing Pet. 43–44; Ex. 1022, 116:20–121:4; Ex. 1021 ¶ 18). Under Supreme Court precedent, "any need or problem known in the field of endeavor at the time of invention and addressed by the patent can provide a reason for combining the elements in the manner claimed." *KSR*, 550 U.S. at 420.

Patent Owner also argues that "[t]he main problem with [Petitioner's] approach is that Petitioners wish to marry a precision actuator [of Poertzgen] with a non-precise fan motor [of Boucheret]" and "[i]n reality, one would not have introduced the claimed isolator into Poertzgen." PO Resp. 23, 31. Patent Owner asserts that "[t]he actuator of Poertzgen is of the type that prioritizes precision, and relies on tight tolerances between adjacent mechanical components." *Id.* at 31. Referring to Figure 1 of Poertzgen, Patent Owner asserts that "Poertzgen desires to maintain a constant distance of about 0.5 mm between its nut 30 and brake piston 18." *Id.* at 24 (citing Ex. 1007, 9:3–10). According to Patent Owner,

> [i]n order to maintain this 0.5 mm spacing between nut 30 and piston 18, Poertzgen describes a number of sensors that can be used to determine the position of the nut 30. Critically, Poertzgen relies on sensed motor rotations to deduce whether the nut 30 has returned to the desired 0.5 mm spacing after release of its parking brake. Poertzgen is able to deduce nut position "[b]ecause of the known reduction ratio between the output shaft 46 of the electric motor and the spindle 26." Specifically, because the reduction ratio is known, Poertzgen states that the spacing between the nut 30 and piston 18 can be adjusted "very precisely" simply by counting a number of revolutions of the output shaft.

Id. at 24–25 (citing and quoting Ex. 1007, 10:8–20). Patent Owner argues that "if one introduced isolators between Poertzgen's otherwise rigidly-mounted components, one would introduce adverse motion and misalignments into Poertzgen's device, and Poertzgen could no longer reliably deduce a precise nut position using sensed motor rotation." *Id.* at 25 (citing Ex. 2005 ¶ 81); *see also id.* at 32 ("Using isolators in Poertzgen . . . would make it difficult if not impossible for Poertzgen to reliably determine the precise relationship between its nut and brake piston.") (citing Ex. 2005 ¶¶ 81–88, 116).

But neither Patent Owner nor Dr. Stein provides persuasive explanation of how Petitioner's proposed addition of an isolator to the actuator of Poertzgen would prevent electric motor 42 and output shaft 46 from interfacing with the remaining components of the brake and prevent deduction of a precise nut position using sensed motor rotation. Poertzgen discloses that a Hall sensor 52 "measures the *revolutions* per time of the output shaft 46 of the electric motor 42." Ex. 1007, 10:10–11 (emphasis added). In other words, Poertzgen's Hall sensor is not disclosed as measuring small changes in output shaft position; it measures only full 360° rotations, i.e., revolutions, of the output shaft. This is inconsistent with Patent Owner's argument that Poertzgen's system must control the precise position of the motor 42/output shaft 46. Moreover, even if Hall effect sensor 52 were configured to measure partial rotations of output shaft 46, Petitioner has offered persuasive testimony that a component isolator would not prevent Poertzgen's system from determining the precise position of the disclosed nut. *See* Ex. 1021 ¶¶ 7–10. We also agree with Dr. Lequesne that one of ordinary skill in the art would have known, and been able, to fashion an isolator that would permit motor 42 to be mounted in a stable and secure

fashion. *See id.* ¶ 6. Dr. Stein's testimony that an isolator "could" introduce misalignments is not persuasive because Dr. Stein fails to adequately explain why one of ordinary skill in the art allegedly would have been unable to design an isolator that was sufficiently stable. *See* Ex. 2005 ¶ 116.

On this record, Patent Owner's argument that introduction of an isolator would prevent Poertzgen's actuator from deducing a precise nut position using sensed motor rotation is not persuasive.

Patent Owner also argues that "Petitioners have fallen into a 'hindsight trap,'" pointing out the "vast" differences between Poertzgen and Boucheret. PO Resp. 33. Patent Owner argues that "[g]iven the significant differences between the two systems, Boucheret's vibration dampers would not even necessarily work as dampers when introduced into Poertzgen." *Id.* at 33–34. On this record, Patent Owner's arguments are unavailing. Petitioner has offered declaration evidence that Boucheret's teaching of adding an isolator between an electric motor and a component to which it is mounted in order to reduce NVH would have led one of ordinary skill in the art to add an isolator between Poertzgen's electric motor 42 and the sub-frame of unit 40. Pet. 36–38 (citing Ex. 1002 ¶¶ 164–166). Patent Owner does not argue that the proposed modification would have been beyond the level of ordinary skill in the art. *See KSR*, 550 U.S. at 417 (noting that, "if a technique has been used to improve one device, and a person of ordinary skill in the art would recognize that it would improve similar devices in the same way, using the technique is obvious unless its actual application is beyond his or her skill"). On this record, we find Petitioner's reason to combine is not based on hindsight.

Moreover, to the extent Patent Owner's arguments suggest that obviousness could only be shown if Boucheret's dampers could be bodily

incorporated into Poertzgen to arrive at the claimed invention, an obviousness analysis is not so constrained. *See, e.g.*, *Allied Erecting & Dismantling Co. v. Genesis Attachments, LLC*, 825 F.3d 1373, 1381 (Fed. Cir. 2016) ("The test for obviousness is not whether the features of a secondary reference may be bodily incorporated into the structure of the primary reference[.]"); *see also In re Mouttet*, 686 F.3d 1322, 1332 (Fed. Cir. 2012) ("It is well-established that a determination of obviousness based on teachings from multiple references does not require an actual, physical substitution of elements.").

Patent Owner also contests Petitioner's citation of Happian-Smith (Exhibit 1014). PO Resp. 36. Patent Owner argues that Happian-Smith "describes two use-cases where dampers are used to damp vibrations in continuously-running, steady-state systems," but "does not discuss short-burst actuators or precision positioning actuators (like Poertzgen) at all." *Id.* (citing Ex. 2005 ¶¶ 122, 123). Thus, Patent Owner argues, Happian-Smith "teaches one to use dampers in systems similar to Boucheret's, as opposed to actuators like those of Poertzgen," and "would simply not lead one to introduce isolators into the precision positioning device of Poertzgen." *Id.* (citing Ex. 2005 ¶¶ 122, 123). But Petitioner merely relies on Happian-Smith to support the contentions that "it was within the general knowledge in the art that the transmission of NVH could be reduced by placing an isolator or damping element between automotive components" and "[t]he simplest such isolators are passive elastic members placed between components to act as cushions and dampen NVH." Pet. 35 (citing Ex. 1014, 198; Ex. 1002 ¶¶ 159–160). Petitioner does not rely on Happian-Smith to demonstrate that one of ordinary skill would have placed a vibration damper where Poertzgen's motor 42 is mounted to Poertzgen's sub-frame.

Moreover, Patent Owner does not persuasively explain why the context of isolating an engine from a vehicle's structure would make Happian-Smith's vibration damping teachings inapplicable to Poertzgen's electric motor mounting arrangement.

Patent Owner also disputes Petitioner's interpretation that Poertzgen's Figure 1 shows a "spacer" between the motor and sub-frame. PO Resp. 36–37 (citing Pet. 35, 38). Poertzgen's Figure 1, as annotated by Patent Owner, is reproduced below.

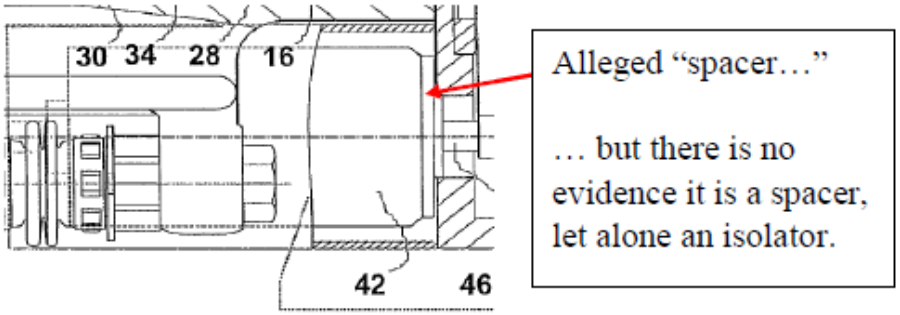

Id. at 37. Patent Owner argues that there is no basis for Petitioner to call the rectangular-shaped feature between the motor and sub-frame a spacer. *Id.* According to Patent Owner, instead, the "rectangular-shape could be an end section or end cap of the motor as opposed to a spacer (let alone an isolator)." *Id.*

On this point, Patent Owner may be correct. Although Petitioner cites testimony to support its interpretation (*see* Pet. 38 (citing Ex. 1002 ¶ 166)), this testimony provides only a conclusory parenthetical statement that Figure 1 of Poertzgen shows a "spacer between the motor and the rest of the actuator" (Ex. 1002 ¶ 166). On this record, it appears equally likely that the rectangular feature is a section of the motor, as argued by Patent Owner. PO Resp. 37. This potential insufficiency, however, is not fatal to

Petitioner's contentions. As discussed above, Petitioner has provided other persuasive reasoning to support its contention that one of ordinary skill in the art would have had reason to locate an isolator between Poertzgen's motor and sub-frame.

Finally, Patent Owner's argument that "Petitioners have either ignored or did not appreciate that isolators could have disadvantages when used in Poertzgen" (PO Resp. 38) is unavailing because, as the Federal Circuit has explained, "a given course of action often has simultaneous advantages and disadvantages, and this does not necessarily obviate motivation to combine." *Medichem, S.A. v. Rolabo, S.L.*, 437 F.3d 1157, 1165 (Fed. Cir. 2006).

On this record, upon considering and weighing all the evidence and the parties' arguments, we determine that Petitioner has demonstrated persuasively that one of ordinary skill in the art would have had reason to combine the teachings of Poertzgen and Boucheret in the manner proposed in the Petition with a reasonable expectation of success. Namely, Petitioner provides credible evidence and argument that, based on Boucheret's teaching to use vibration dampers between an electric motor and a structure to which it mounts (e.g., a housing), one of ordinary skill in the art would have had reason to modify Poertzgen to include such a vibration damper between electric motor 42 and the sub-frame of unit 40 (i.e., the structure to which the motor mounts) to reduce NVH. *See* Pet. 36–37; Pet. Reply 3–12; Ex. 1002 ¶¶ 175–182; Ex. 1021 ¶¶ 2–18.

> *[5G] a brake caliper coupled to said actuator output, said actuator output being configured for driving said brake caliper between an engaged position and a released position.*

Petitioner contends that Poertzgen's housing 12 with integrally-formed floating caliper 14 is "a brake caliper coupled to said actuator

output," as claimed. Pet. 22 (citing Ex. 1007, 7:8–10). Petitioner contends that rotating spindle 26 translates nut 30, causing it "to contact the brake piston 18, which causes the caliper to close and the friction pad to contact the brake disk, thus engaging the brake (the recited '*engaged position*' of the brake caliper)." *Id.* at 23 (citing Ex. 1007, code (57), 2:4–11, 4:30–5:7, 6:7–13, 7:26–8:27, Fig. 1). Petitioner also contends that reversing the rotation of spindle 26 causes "nut 30 to translate in the opposite direction, relieving the brake piston of pressure and causing the brake caliper to open (the recited '*released position*' of the brake caliper)." *Id.* (citing Ex. 1007, code (57), 5:8–14, 8:28–32; Ex. 1002 ¶¶ 107–109).

Patent Owner does not dispute Petitioner's assertions based on Poertzgen as to limitation [5G]. *See* PO Resp. 29–40. On this record, we are persuaded that Poertzgen discloses this limitation of claim 5.

Conclusion for Claim 5

For the reasons discussed above, Petitioner has shown persuasively that one of ordinary skill in the art would had had reason to combine the teachings of Poertzgen and Boucheret in the manner set forth in the Petition with a reasonable expectation of success, and that the resulting combination would have satisfied all limitations of claim 5. *See* Pet. 40–42; Pet. Reply 3–17; Ex. 1002 ¶¶ 174–182; Ex. 1021 ¶¶ 2–18. Weighing all the evidence and the parties' arguments, we determine that Petitioner has demonstrated by a preponderance of the evidence that claim 5 is unpatentable as obvious over Poertzgen and Boucheret under 35 U.S.C. § 103(a).

d) Analysis of Claims 7, 8, and 14–19

Petitioner's contentions account for each limitation recited in independent claims 8, 16, and 17, and dependent claims 7, 14, 15, 18, and 19

(*see* Pet. 42–52), and are supported by testimony from Dr. Lequesne (*see* Ex. 1002 ¶¶ 183–207; Ex. 1021 ¶¶ 2–19).

Patent Owner argues that claims 7 and 8 would not have been obvious over Poertzgen and Boucheret for the same reasons as independent claim 5. PO Resp. 40–41. These arguments are unavailing for the reasons discussed above. *See supra* § III.F.1.c.

As for claim 7, which requires an isolator coupled between a planetary gear set and a sub-frame (Ex. 1001, 9:56–59), Patent Owner argues that "[o]ne would not couple an isolator between a sub-frame and planetary gear set in light of Poertzgen (no isolators) and Boucheret (isolator mounted relative to motor)." PO Resp. 40. But Patent Owner cites no evidence or testimony to support its argument. Petitioner provides declaration testimony to support its contention that "[t]he teachings of Boucheret (and the general knowledge of the POSA to place isolators in potential NVH paths) with respect to the benefits of placing an isolator between the motor and the sub-frame . . . render obvious the placement of an isolator between the sub-frame and a planetary gear set, *e.g.*, on the other side of [Poertzgen's] sub-frame." Pet. 43 (citing Ex. 1002 ¶¶ 183–184). On this record, we find Petitioner's contention persuasive.

As for claim 8, which requires an isolator coupled between a sub-frame and a remainder of an actuator (Ex. 1001, 10:3–5), Patent Owner argues that neither Poertzgen nor Boucheret "teaches one to mount an isolator to a subframe at all, let alone between a sub-frame and a remainder of an actuator." PO Resp. 41. But under Supreme Court precedent, "any need or problem known in the field of endeavor at the time of invention and addressed by the patent can provide a reason for combining the elements in the manner claimed." *KSR*, 550 U.S. at 420. Petitioner provides declaration

testimony to support its contention that "it would have been obvious, in view of Boucheret, for a POSA to place an isolator between the sub-frame . . . and the remainder of the actuator, as required by limitation [8F], to reduce transmission of NVH from the motor (which is mounted to the sub-frame . . .) to the remainder of the actuator." Pet. 45 (citing Ex. 1002 ¶¶ 189–190). On this record, we find Petitioner's contention persuasive.

Patent Owner argues that claims 14 and 15 would not have been obvious over Poertzgen and Boucheret for the same reasons as independent claim 5. PO Resp. 42. These arguments are unavailing for the reasons discussed above. *See supra* § III.F.1.c.

As for claim 15 requiring "a second motor isolator" disposed between the motor and the actuator housing, Patent Owner argues that "once one adds a second isolator the problems identified by Dr. Stein of deterioration of the precision movement of the components would only be further increased." PO Resp. 42 (citing Ex. 2005 ¶¶ 132–134, 138, 139). But Patent Owner's argument regarding deterioration of the precision movement of the components due to an isolator is unavailing for the reasons discussed above. *See supra* § III.F.1.c.[5F]. For similar reasons, we are not persuaded by Patent Owner's argument that a second isolator would compound precision-related problems.

Patent Owner also argues that "because Boucheret teaches one to absorb all vibrations from a common location, Boucheret would not lead one to add multiple isolators in different locations, as in claim 15." PO Resp. 42 (citing Ex. 2005 ¶ 134). To the extent Patent Owner's argument suggests that Boucheret teaches away from adding multiple isolators at different locations, we disagree as Patent Owner has not identified any teaching in Boucheret that "criticize[s], discredit[s], or otherwise discourage[s]

investigation into the claimed invention." *Meiresonne v. Google, Inc.*, 849 F.3d 1379, 1382 (Fed. Cir. 2017) (quotation omitted); *see also DyStar Textilfarben GmbH v. C.H. Patrick Co.*, 464 F.3d 1356, 1364 (Fed. Cir. 2006) ("We will not read into a reference a teaching away from a process where no such language exists."). On this record, we are persuaded that one of ordinary skill in the art would have had reason to add a "second motor isolator" of the type recited in claim 15 to Poertzgen's system. *See* Pet. 38–40, 46–47; Pet. Reply 4–7.

Patent Owner argues that claims 16 and 17 would not have been obvious over Poertzgen and Boucheret for the same reasons as claim 8. PO Resp. 43. These arguments are unavailing for the reasons discussed above. *See supra* § III.F.1.d (claim 8).

Noting that claims 16 and 17 recite both an "actuator housing" and a "sub-frame," Patent Owner further argues that "[i]t is improper for Petitioners to read a 'sub-frame' on a portion of an 'actuator housing' in all claims, but undeniably so in claim 16." PO Resp. 43; *see also id.* at 44 ("[C]laim 17 recites both an 'actuator housing' and a 'sub-frame' which underscores that these are separate, distinct structures, and Petitioners have not appreciated the claimed distinction."). Patent Owner's argument is not persuasive because, as discussed above, we reject Patent Owner's claim construction contention that a sub-frame must necessarily be a component that is distinct from an actuator housing. *See supra* § III.C.

We further note that the structure that Petitioner identifies as a sub-frame is merely one component of the structures that Petitioner contends collectively comprise an actuator housing. This is apparent from the annotated version of Poertzgen's Figure 1 from page 24 of the Petition, which is reproduced below.

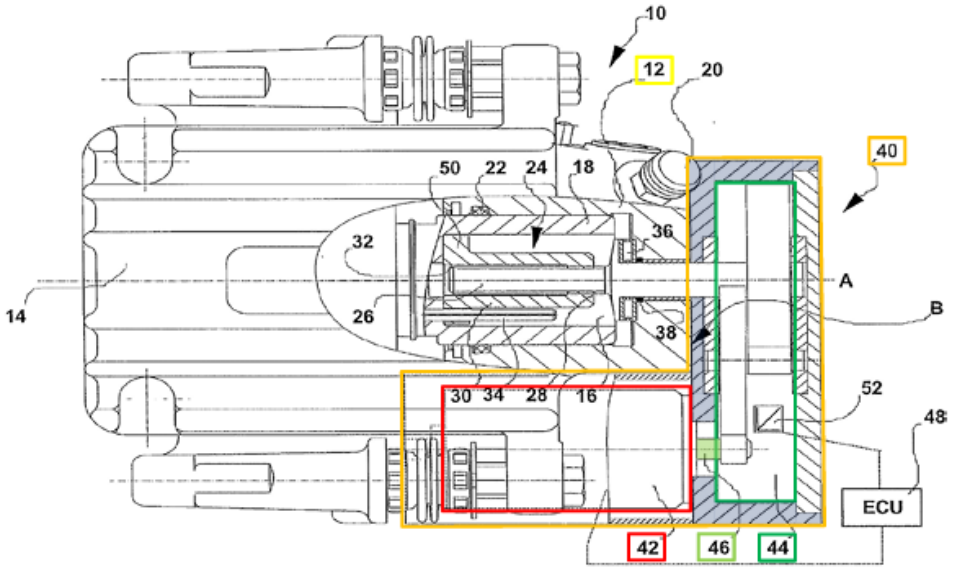

The annotated version of Poertzgen's Figure 1, above, identifies with orange outlining the structures that Petitioner contends collectively constitute the claimed actuator housing. Pet. 27. The Petitioner-identified subframe—designated with gray shading—is merely one component of this actuator housing. *See* Pet. 24–25. This is apparent because the adjoining structures forming the Petitioner-identified actuator housing are depicted with different types of hatching. *See* 37 C.F.R. § 1.84(h)(3) ("Hatching must be used to indicate section portions of an object . . . . The various parts of a cross section of the same item should be hatched in the same manner and should accurately and graphically indicate the nature of the material(s) that is illustrated in cross section. The hatching of juxtaposed different elements must be angled in a different way.").

On this record, we are persuaded by Petitioner's contention, supported by declaration testimony, that "adding Boucheret's isolator between Poertzgen's components, such as its sub-frame and housing, combines those prior art elements according to known methods (interposing an isolator

between the components) to obtain the predictable result (dampening NVH)." Pet. 49 (citing Ex. 1002 ¶ 200).

Patent Owner argues that claims 18 and 19 would not have been obvious over Poertzgen and Boucheret for the same reasons as claim 17. PO Resp. 44. But these arguments are unavailing for the reasons discussed above with respect to claim 17. *See supra* § III.F.1.d (claim 17).

As for claim 18 reciting a "motor isolation cavity," Patent Owner argues that "there is no evidence that Poertzgen's motor is actually contained within anything that could be considered a motor isolation cavity." PO Resp. 45. Patent Owner asserts that "[t]he drawings of Poertzgen are simply inconclusive as to whether a motor cavity is shown." *Id.* at 47 (citing Ex. 2005 ¶¶ 140–144). Poertzgen's Figure 1, as annotated by Petitioner and further annotated by Patent Owner, is reproduced below.

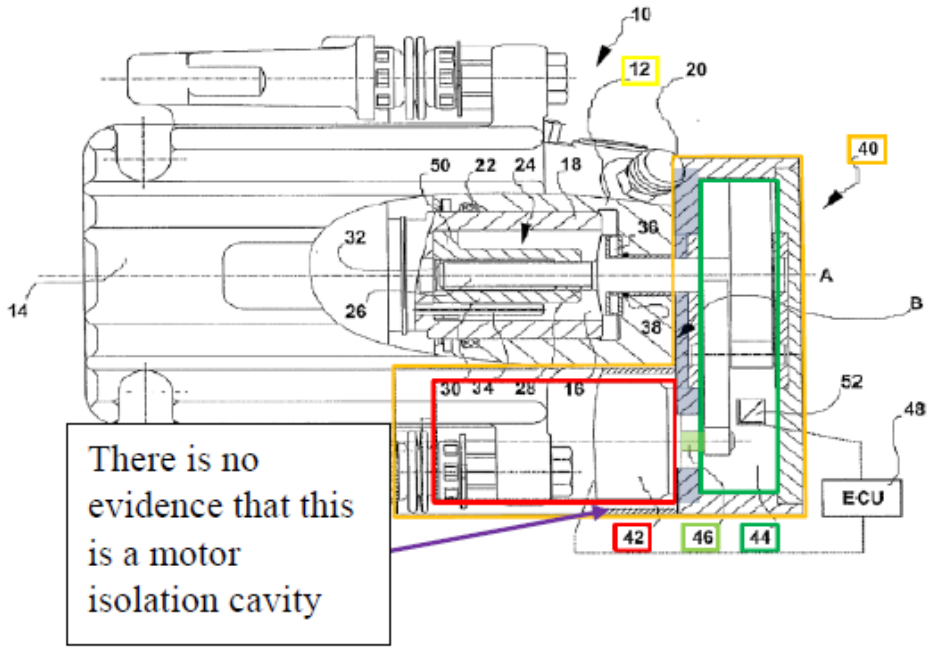

Id. at 45. In the above version of Poertzgen's Figure 1, Patent Owner has added an annotation indicating that there is no evidence that the un-

numbered components surrounding electric motor 42 define "a motor isolation cavity."

In its Reply, Petitioner provides a close-up view of Poertzgen's Figure 1 (reproduced below with Petitioner's annotations) and asserts that "there is empty space (blue) between the wall of the actuator housing (yellow) and the motor (red), and that the housing surrounds the motor, as shown by the fact that the housing wall is cutaway in the figure (cutaway line indicated with the purple arrow)." Pet. Reply 18.

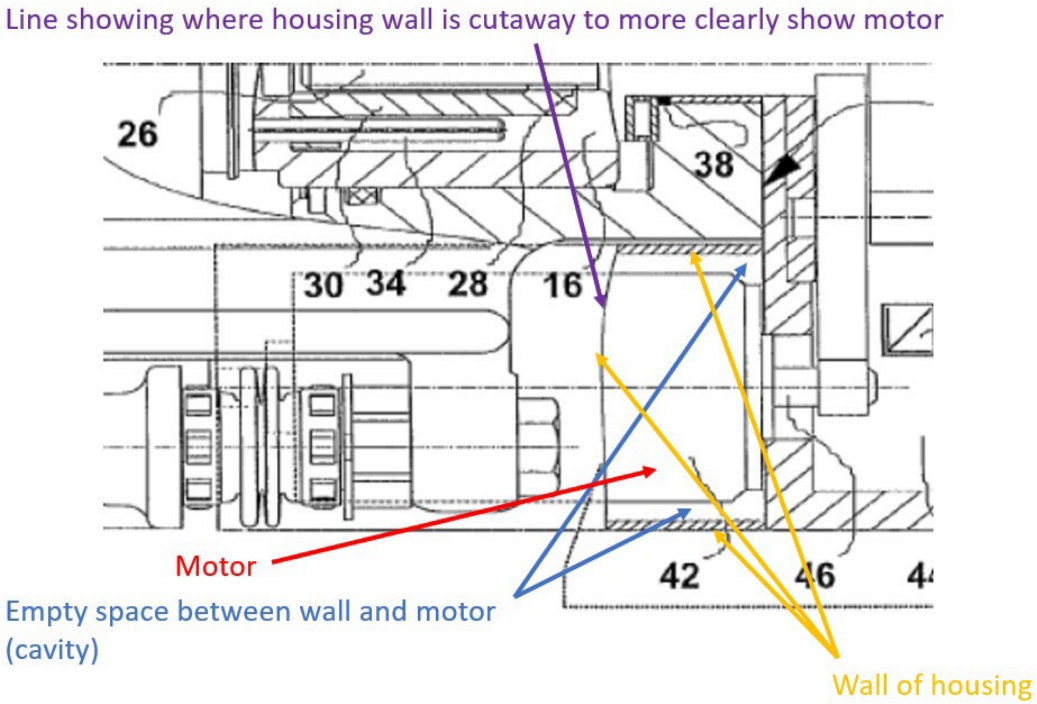

Id. at 19 (citing Ex. 1007, Fig. 1 (annotated); Ex. 1002 ¶¶ 126–28). The close-up version of Figure 1, above, depicts motor 42 and un-numbered components identified with yellow arrows that Petitioner contends are the walls of a housing. Upon considering and weighing the parties' arguments and cited evidence, including what Poertzgen's Figure 1 reasonably discloses to a person of ordinary skill in the art, we find Petitioner's argument that Poertzgen discloses a motor isolation cavity persuasive. In

particular, we note that the outline of electric motor 42 is dotted to the left side of the Petitioner-identified cutaway line (the line identified with the purple arrow), and solid to the right side of that line. This is consistent with Petitioner's contention that this figure depicts a housing covering electric motor 42. The cross-hatched areas to the right of the Petitioner-identified cutaway line appear to depict the side walls of a housing, and are consistent with Petitioner's contention that the housing extends to the right of the cutaway line.

As for claim 19 reciting "further comprising a motor isolator," Patent Owner argues that "Boucheret would not lead one to place isolators in different locations within an actuator." PO Resp. 44 (citing Ex. 2005 ¶¶ 138, 139). Patent Owner also argues that "a plurality of isolators would only provide that much more of a challenge to achieving the precision movement that Poertzgen requires." *Id.* at 45 (citing Ex. 2005 ¶ 139). These arguments are unavailing for the reasons discussed above with respect to claim 15. *See supra* § III.F.1.d (claim 15). We are persuaded on this record that one of ordinary skill in the art would have had reason to add an additional isolator between the motor and the mounted plate, as recited in claim 19. *See* Pet. 49–52.

For the reasons discussed above, Petitioner has shown persuasively that one of ordinary skill in the art would had had reason to combine the teachings of Poertzgen and Boucheret in the manner set forth in the Petition with a reasonable expectation of success, and that the resulting combination would have satisfied all limitations of claims 7, 8, and 14–19. *See* Pet. 42–52; Pet. Reply 3–17; Ex. 1002 ¶¶ 183–207; Ex. 1021 ¶¶ 2–19. Weighing all the evidence and the parties' arguments, we determine that Petitioner has demonstrated by a preponderance of the evidence that claims 7, 8, and 14–

19 are unpatentable as obvious over Poertzgen and Boucheret under 35 U.S.C. § 103(a).

2. Ground 2: Obviousness of Claims 5, 7, 8, and 14–19 Over Poertzgen, Boucheret, and Drennen

Petitioner contends that the combination of Poertzgen, Boucheret, and Drennen renders obvious claims 5, 7, 8, and 14–19. Pet. 61–63. In particular, Petitioner argues that to the extent Poertzgen lacks the required sub-frame, one of ordinary skill in the art would have found it obvious to mount the motor and gears of Poertzgen on a subframe of the type taught by Drennan. *Id.* at 61–62. Petitioner's contentions are supported by testimony from Dr. Lequesne. Ex. 1002 ¶¶ 236–239; Ex. 1021 ¶¶ 2–19.

Patent Owner argues that "the alleged sub-frame of Drennen would still be a part of what Petitioners deem the 'actuator housing,' which is improper," and "Ground 2 suffers from the same flaws as Ground 1." PO Resp. 48, 49. Patent Owner's argument is not persuasive because, as discussed above, we reject Patent Owner's claim construction contention that a sub-frame must necessarily be a component that is distinct from an actuator housing. *See supra* § III.C. In addition, for the reasons discussed above, we do not determine on this record that Petitioner's proposed combination of Poertzgen and Boucheret in Ground 1 is deficient. *See supra* § III.F.1.c. Accordingly, Patent Owner's arguments against Petitioner's proposed combination of Poertzgen, Boucheret, and Drennen are not persuasive.

For the reasons discussed above, Petitioner has shown persuasively that one of ordinary skill in the art would have had reason to combine the teachings of Poertzgen, Boucheret, and Drennen in the manner set forth in the Petition with a reasonable expectation of success, and that the resulting

combination would have satisfied all limitations of claims 5, 7, 8, and 14–19. *See* Pet. 61–63; Pet. Reply 13–17; Ex. 1002 ¶¶ 236–239; Ex. 1021 ¶¶ 2–19. Weighing all of the evidence and arguments offered by the parties, we determine that Petitioner has demonstrated by a preponderance of the evidence that claims 5, 7, 8, and 14–19 are unpatentable over Poertzgen, Boucheret, and Drennen under 35 U.S.C. § 103(a).

3. Ground 3: Obviousness of Claims 5, 7, 8, and 14–19 Over Poertzgen, Boucheret, and Weiler

Petitioner contends that the combination of Poertzgen, Boucheret, and Weiler renders obvious claims 5, 7, 8, and 14–19. Pet. 70–71. In particular, Petitioner argues that to the extent Poertzgen lacks the required sub-frame, one of ordinary skill in the art would have found it obvious to mount the motor and gears of Poertzgen on a sub-frame as taught by Weiler. *Id.* Petitioner's contentions are supported by testimony from Dr. Lequesne. Ex. 1002 ¶¶ 259–262; Ex. 1021 ¶¶ 2–19.

Patent Owner argues that "the alleged sub-frame from Weiler would still be part of the alleged 'actuator housing,' which is not consistent with the meaning of the term 'sub-frame.'" PO Resp. 49. Patent Owner's argument is not persuasive because, as discussed above, we reject Patent Owner's claim construction contention that a sub-frame must necessarily be a component that is distinct from an actuator housing. *See supra* § III.C. In addition, for the reasons discussed above, we do not determine on this record that Petitioner's proposed combination of Poertzgen and Boucheret in Ground 1 is deficient. *See supra* § III.F.1.c. Accordingly, Patent Owner's arguments against Petitioner's proposed combination of Poertzgen, Boucheret, and Weiler are not persuasive.

Petitioner has shown persuasively that one of ordinary skill in the art would have had reason to combine the teachings of Poertzgen, Boucheret, and Weiler in the manner set forth in the Petition with a reasonable expectation of success, and that the resulting combination would have satisfied all limitations of claims 5, 7, 8, and 14–19. *See* Pet. 70–71; Pet. Reply 13–17; Ex. 1002 ¶¶ 259–262; Ex. 1021 ¶¶ 2–19. Weighing all of the evidence and arguments offered by the parties, we determine that Petitioner has demonstrated by a preponderance of the evidence that claims 5, 7, 8, and 14–19 are unpatentable over Poertzgen, Boucheret, and Weiler under 35 U.S.C. § 103(a).

4. Ground 4: Obviousness of Claims 24 and 25 Over Weiler

Petitioner contends that Weiler renders obvious claims 24 and 25. Pet. 80–83; *see also id.* at 72–75 (addressing disclaimed independent claim 20, from which each of claims 24 and 25 depends). Petitioner's contentions are supported by testimony from Dr. Lequesne. Ex. 1002 ¶¶ 278–282; Ex. 1021 ¶¶ 2, 3, 5–12, 19; *see also* Ex. 1002 ¶¶ 263–282 (addressing disclaimed independent claim 20, from which each of claims 24 and 25 depends).

a) Summary of Weiler

Weiler is directed "to an electromechanically actuated partially lined disk brake . . . that can be used both to realize a service and a parking brake function." Ex. 1012, 1:4–5. Weiler describes a brake caliper that includes an electromechanical actuator unit, a multi-stage reduction gear, and an actuator element for bringing a brake lining into engagement with a brake disk surface. *Id.* at 2:19–26. According to Weiler, "[t]his allows a particularly compact design of the brake caliper, wherein the brake caliper is

capable of implementing both the service and parking brake functions." *Id.* at 2:26–28.

Figure 1 of Weiler, reproduced below, shows a partial section view of a brake caliper according to one embodiment. Ex. 1012, 7:7–9.

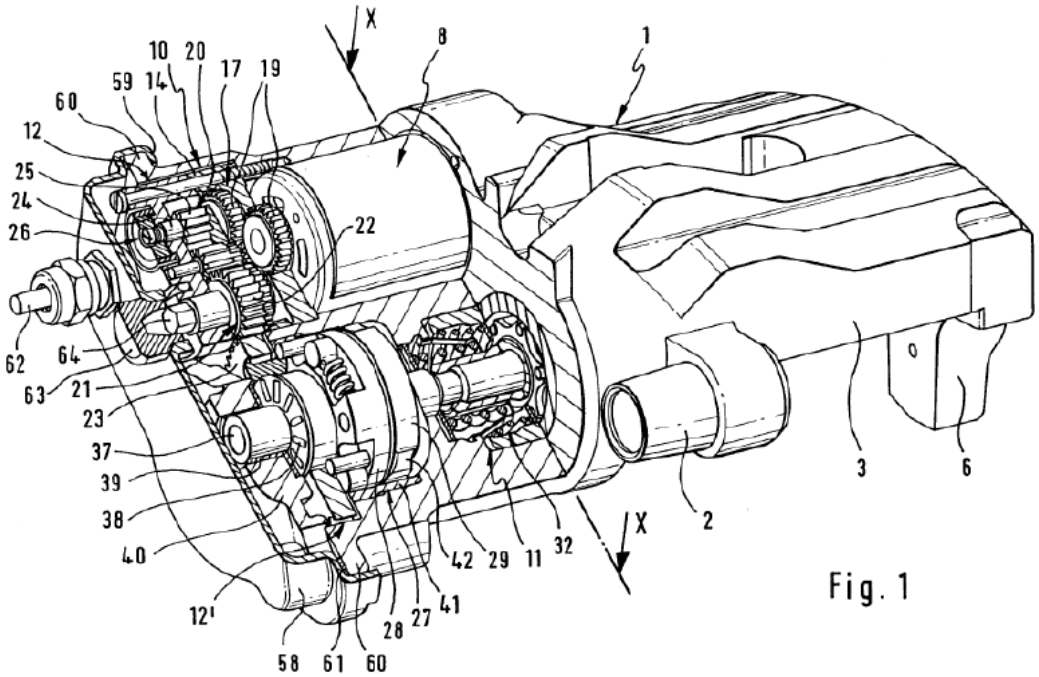

Figure 1 depicts brake caliper 1 of a partially-lined disk brake. *Id.* at 7:23–24. Brake caliper 1 includes brake piston 5 (identified in Figure 2) connected to brake linings that interact with a brake disk (not shown). *Id.* at 7:27–8:2. Electromechanical actuator unit 8 (i.e., electric motor) provides a parking brake function via multi-stage reduction gear 10 and actuator element 11. *Id.* at 8:16–18, 8:21–22.

Figure 2 of Weiler, reproduced below, shows a section view of the brake caliper embodiment shown in Figure 1. Ex. 1012, 7:11.

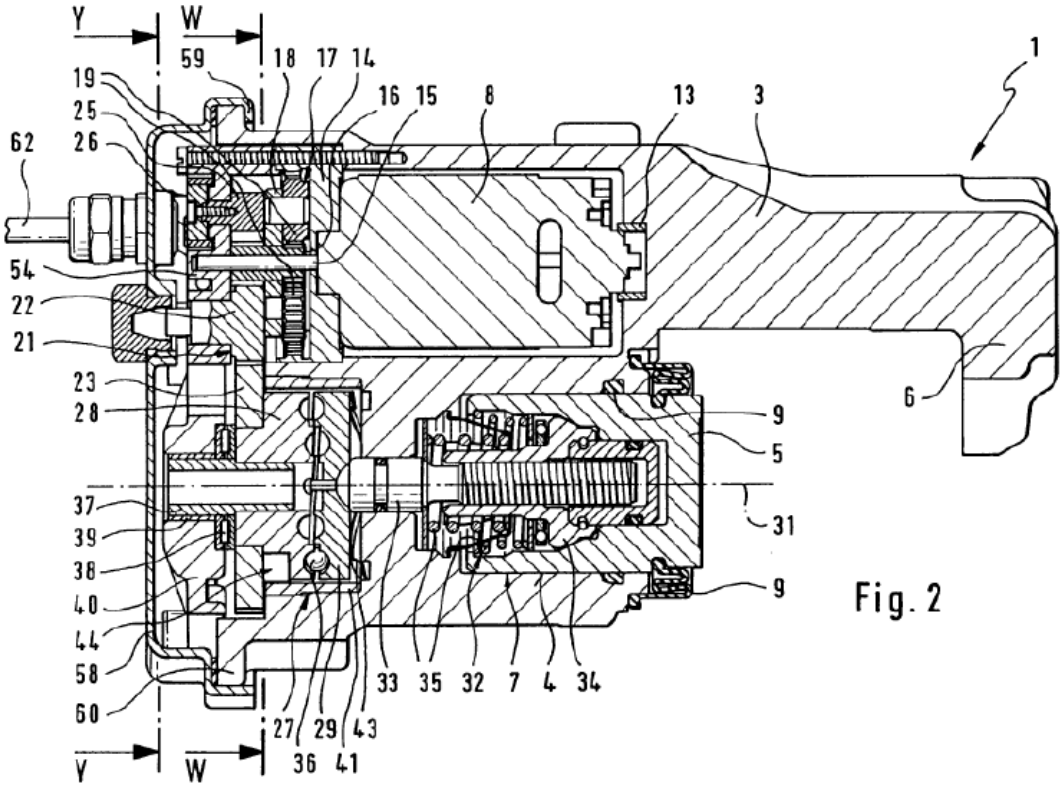

Fig. 2

Figure 2 depicts brake caliper 1 including electromechanical actuator unit 8 arranged parallel to brake piston axis 31 and accommodated on both sides via bearing bushing 13 and bearing plate 14. *Id.* at 8:24–25, 13:28–14:1. A first subassembly comprises electromechanical actuator unit 8 arranged parallel to brake piston axis 31, planetary gear 17, bearing plate 14 with ring gear 20 (not shown), angular position sensor 26, drive wheel 22, and gear cover 54. *Id.* at 13:28–14:4. Brake caliper 1 also includes a second subassembly comprising rolling-element ramp-type gear 27, switchable freewheel 44, output gear 23, and hollow shaft 37, which is mounted via bearing bush 39, bearing 38, and traverse 40. *Id.* at 14:11–14.

b) Analysis of Claim 24

Claim 24 depends from, and thus incorporates, disclaimed independent claim 20. *See* Ex. 1001, 12:22–23 (claim 24), 12:1–6 (claim

20). Petitioner contends that Weiler renders obvious claim 24. Pet. 80–81.[12] Petitioner's contentions are supported by testimony from Dr. Lequesne. Ex. 1002 ¶¶ 264–267, 275–280; Ex. 1021 ¶¶ 2, 3, 5–12, 19.

[20A][13] A method of assembling an actuator comprising:

Petitioner contends that Weiler discloses assembling an actuator for an electronic parking break. Pet. 72 (citing Ex. 1012, code (57), 1:4–14, 2:12–28, 5:17–25, 6:10–7:2, 8:16–9:18, 13:28–14:29, Figs. 1–4; Ex. 1002 ¶ 264).

Patent Owner does not dispute Petitioner's assertion based on Weiler as to this limitation of claim 24. *See* PO Resp. 49–58. On this record, we are persuaded that Weiler discloses the preamble of claim 24.

[20B] mounting a motor and a gear train to a sub-frame;

Petitioner contends that Weiler discloses motor 8 and gears 16–19 mounted on bearing plate 14. Pet. 72–73 (citing Ex. 1012, 2:17–28, 5:17–25, 6:10–7:2, 8:16–9:1, 13:28–14:29, Figs. 1–4; Ex. 1002 ¶ 265).

Patent Owner does not dispute Petitioner's assertion based on Weiler as to this limitation of claim 24. *See* PO Resp. 49–58. On this record, we are persuaded that Weiler discloses this limitation of claim 24.

---

[12] Petitioner's discussion of claim 24 refers back to earlier sections of the Petition discussing limitations appearing in disclaimed claims 20 and 23. Accordingly, our analysis of Petitioner's assertions for claim 24 necessarily references portions of the Petition concerning disclaimed claims 20 and 23.
[13] We refer to the bracketed claim limitation identifiers used in the Petition.

> *[20C] coupling said sub-frame to a portion of an actuator housing to at least partially enclose said motor in a motor isolation cavity defined by said portion of said actuator housing and said sub-frame;*

Petitioner contends that Weiler discloses a brake caliper having a housing-like recess in which motor 8, reduction gear 10, and actuator element 11 are disposed. Pet. 74 (citing Ex. 1012, code (57), 2:17–28, 6:10–7:2, 8:16–25, 13:28–14:9, claims 1, 19). Petitioner provides an annotated version of Weiler's Figure 2, reproduced below, to support its contentions.

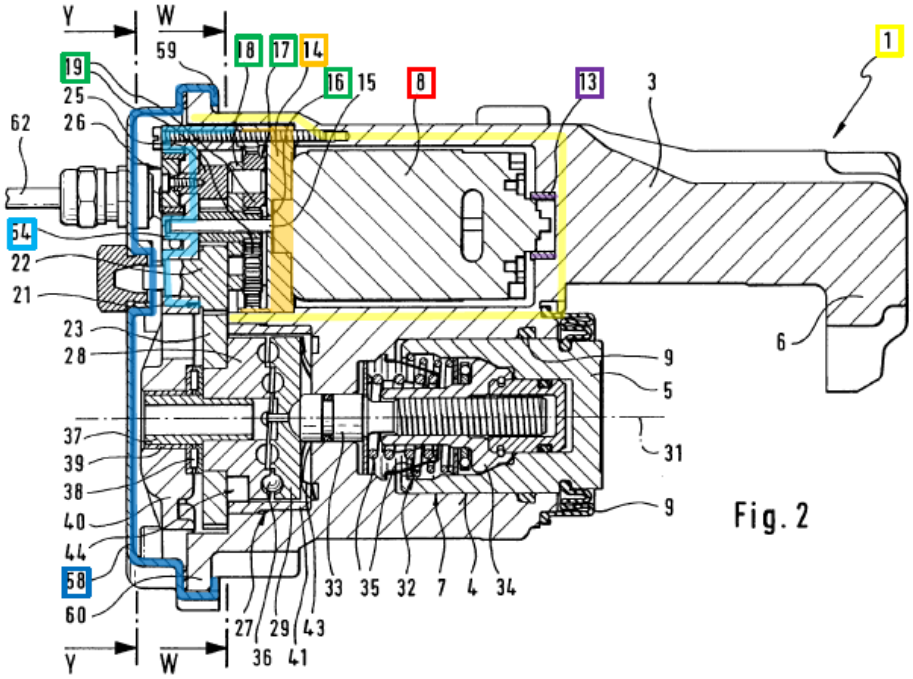

Fig. 2

Id. Petitioner contends, with reference to annotated Figure 2 of Weiler, that "[t]he '*motor isolation cavity*' is defined by a portion of the '*actuator housing*' (the housing around the recess, **yellow**) and the sub-frame (bearing plate 14, **orange**, coupled over the cavity to enclose the motor)." *Id.* Petitioner also contends that one of ordinary skill in the art "would have understood from Weiler that the portion of the brake caliper surrounding the

'housing-like recess 12,' houses the actuator's motor and is a portion of the actuator housing." *Id.* (citing Ex. 1012, 8:18–21; Ex. 1002 ¶ 266).

Patent Owner argues that the portion of Weiler's brake caliper 1 identified by Petitioner is not an "actuator housing" of the type required by claim 24. PO Resp. 54 (citing Pet. 74; Ex. 2005 ¶¶ 153, 154). Patent Owner argues that Weiler's "'housing-like recess' of its brake caliper . . . is not an actuator housing, consistent with how that term is used in the claims, as interpreted in light of the specification." *Id.* at 54–55. Patent Owner's argument is not persuasive because, as discussed above, we reject Patent Owner's claim construction contention that no portion of a brake caliper may form part of an actuator housing. *See supra* § III.C.

Weiler discloses that electric motor 8 is housed within brake caliper 1. *See* Ex. 1012, 8:24–25 ("Within the brake caliper 1, the electric motor 8 . . . is accommodated on both sides via a bearing bush 13 and a bearing plate 14."). Although the "actuator housing" identified by Petitioner in Weiler's annotated Figure 2 (*see* Pet. 74 (yellow box)) is indeed a portion of Weiler's brake caliper 1, challenged claims 24 and 25 do not recite a brake caliper, much less require that the recited "actuator housing" be a structure separate from the brake caliper. On this record, we agree with Petitioner's reading of the claimed actuator housing on Weiler's brake caliper 1, which at least partially encloses motor 8 of Weiler's actuator. Thus, we are persuaded that Weiler discloses this limitation of claim 24.

> *[24B] providing a first motor isolation bushing between said portion of said actuator housing and said motor, and*

Petitioner contends that "Weiler discloses that motor 8 is accommodated between bearing bush 13 (**purple**) (the recited *motor*

isolation bushing) and bearing plate 14," and "bearing bush 13 is positioned between the motor 8 and the actuator housing." Pet. 78 (citing Ex. 1012, 8:16–25, Fig. 2; Ex. 1002 ¶¶ 275–276); *see also id.* at 79 (including annotated reproduction of Figure 2 of Weiler showing bearing bush 13 color coded in purple). Petitioner contends that one of ordinary skill "would have recognized that the bearing bush 13 is physically interposed between the motor and the housing (*i.e.*, isolates the motor from the housing) similar to the bushing 316 in the '415 [P]atent." *Id.* at 79.

Patent Owner argues that Weiler's bearing bush 13 is not an "isolation bushing" of the type required by claim 24. PO Resp. 54. Patent Owner argues that Weiler's "bearing bush 13 likely performs the function of increasing the ease of inserting the motor and radially supporting the motor" and "there is no evidence that the bearing bush 13 is actually designed to function as a vibration isolator." *Id.* at 53–54 (citing Ex. 2005 ¶¶ 107, 108). Patent Owner's argument is not persuasive. As Petitioner contends in its Reply and we agree, "the bushing in Weiler physically separates (isolates) the motor from the housing" and it would have been obvious to make this bushing "out of, e.g., rubber or polymer." Pet. Reply 21, 22 n.5; Pet. 79–80. On this record, we are persuaded that Weiler discloses this limitation of claim 24.

[24C] providing a second motor isolation bushing between said sub-frame and said motor.

Petitioner contends that "having an isolator bushing between the motor and the sub-frame is equally as obvious as having one between the motor and the housing." Pet. 80 (citing Pet. § V). Petitioner contends that one of ordinary skill in the art "would have understood that the bushing 13 between the motor and the housing in Weiler helped isolate the motor, and

that having another bushing between the motor and sub-frame," which is located at the opposite side of the motor, "would further isolate the motor." *Id.* Petitioner reasons that adding a bushing between the motor and sub-frame amounts to "using a known technique (bushings between parts for isolation) disclosed in Weiler in a similar device (Weiler's own actuator) in the same way (to isolate the motor)." *Id.* (citing Ex. 1002 ¶ 279).

Patent Owner argues that "[i]ntroducing isolators into Weiler's system would introduce misalignments and unwanted motion that could bring some components out of tolerance, leading to unwanted behaviors and usability concerns," and "would render Weiler's sensor readings unreliable." PO Resp. 53 (citing Ex. 2005 ¶¶ 149–152). But as with Poertzgen discussed above, neither Patent Owner nor Dr. Stein provides persuasive explanation of how Petitioner's proposed addition of an isolation bushing between Weiler's sub-frame and motor would lead to misalignments and unwanted motions in Weiler's system such that one skilled in the art would be taught away from doing so. Upon considering and weighing the parties' arguments and cited evidence, we find Petitioner's argument more persuasive.

Patent Owner also argues that "adding the claimed isolators to Weiler would be redundant in view of Petitioners' characterization of Weiler as already having existing isolation and load dissipation features." PO Resp. 55. Patent Owner asserts that "Petitioners have already alleged that bearing bushes 13 and bearing plates 14 are known to accomplish at least some, if not all, of the functions of the isolator Petitioners seek to add to Weiler." *Id.* at 56. According to Patent Owner, "[a]dding another bushing between the motor 8 and bearing plate 14 would be unnecessary or redundant in view of Weiler's existing bush bearing 13 and bearing plate 14." *Id.* In the Reply, Petitioner responds that "[t]he additional isolators are not truly redundant, in

that they provide additional damping." Pet. Reply 23 (citing Ex. 1021 ¶ 19). Petitioner contends that "[t]he additional isolator . . . is obvious because it acts exactly as expected," noting that Patent Owner "does not even argue that the second isolator achieves some unexpected result." *Id.* at 22 (citing *In re Huang*, 100 F.3d 135, 139 (Fed. Cir. 1996)). Upon considering and weighing the parties' arguments and cited evidence, we find Petitioner's argument more persuasive. In this regard, we note that Weiler's motor, a source of NVH, has two points of attachment. The right side of the motor is attached to the caliper via bearing bush 13. *See* Pet. 80–81. The left side of the motor is attached to bearing plate 14. *See id.* We are persuaded by Petitioner's contentions that one of ordinary skill in the art would have had reason to employ motion isolation bushings at both locations. *See id.*; Pet. Reply 22–23.

c) Conclusion for Claim 24

For the reasons discussed above, Petitioner has shown persuasively that Weiler teaches or suggests all limitations of claim 24. *See* Pet. 72–75, 80–81; Pet. Reply 19–23; Ex. 1002 ¶¶ 264–267, 275–280; Ex. 1021 ¶¶ 2, 3, 5–12, 19. Weighing all the evidence and the parties' arguments, we determine that Petitioner has demonstrated by a preponderance of the evidence that claim 24 is unpatentable as obvious over Weiler under 35 U.S.C. § 103(a).

d) Analysis of Claim 25

Claim 25 depends directly from, and thus incorporates, disclaimed independent claim 20. Ex. 1001, 12:28–29. Petitioner contends that "Weiler teaches claim 20 for the reasons discussed in Section XI.A [of the Petition]." Pet. 81–82; *see also id.* at 72–75 (discussing independent claim 20).

Claim 25 also recites "providing at least one isolation bushing between said portion of said actuator housing and said sub-frame." Ex. 1001, 12:30–31. Petitioner contends that one of ordinary skill "would have understood that the bushing between the motor and the housing in Weiler helped to isolate the motor, and that having another between the housing and the sub-frame would serve to further isolate the motor." Pet. 82; *see also id.* at 83 (citing Ex. 1002 ¶¶ 281–282). According to Petitioner, such a modification amounts to the mere application of a known technique to improve a similar device in the same way. *Id.* at 82 (citing Ex. 1002 ¶ 281).

Patent Owner argues that Petitioner has not explained why one would have wanted to add another bushing between Weiler's bearing plate 14 and the actuator housing. PO Resp. 57 (citing Pet. 82). However, Petitioner provides reasoning and evidence for the proposed modification of Weiler. *See* Pet. 81–82; Ex. 1002 ¶¶ 281–282. Patent Owner's argument is unpersuasive because it is not adequately developed or explained, and is not responsive to Petitioner's contentions as presented.

Patent Owner also argues that Petitioner has not addressed whether adding another bushing between Weiler's bearing plate 14 and the actuator housing would have been redundant in view of Weiler's existing isolation features. PO Resp. 57. In the Reply, Petitioner responds that "[t]he additional isolators are not truly redundant, in that they provide additional damping." Pet. Reply 23 (citing Ex. 1021 ¶ 19). Petitioner contends that "[t]he additional isolator . . . is obvious because it acts exactly as expected," noting that Patent Owner "does not even argue that the second isolator achieves some unexpected result." *Id.* at 22 (citing *In re Huang*, 100 F.3d at 139). Upon considering and weighing the parties' arguments and cited

evidence, we find Petitioner's argument more persuasive. On this record, we are persuaded that one of ordinary skill in the art would have had reason to add an additional isolation bushing in the location recited by claim 25.

e) Conclusion for Claim 25

For the reasons discussed above, Petitioner has shown persuasively that Weiler teaches or suggests all limitations of claim 25, when viewed in the context of the knowledge and experience of one of ordinary skill in the art. *See* Pet. 72–75, 81–83; Pet. Reply 19–23; Ex. 1002 ¶¶ 264–267, 281–282; Ex. 1021 ¶¶ 2, 3, 5–12, 19. Weighing all the evidence and the parties' arguments, we determine that Petitioner has demonstrated by a preponderance of the evidence that claim 25 is unpatentable as obvious over Weiler under 35 U.S.C. § 103(a).

5. Ground 5: Obviousness of Claims 24 and 25 Over Weiler and Boucheret

Petitioner contends that the combination of Weiler and Boucheret renders obvious claims 24 and 25. Pet. 83. In particular, Petitioner contends that to the extent Weiler does not teach the required isolation bushings, one of ordinary skill in the art would have found it obvious in view of the teachings of Boucheret to incorporate isolation bushings between Weiler's motor and housing, motor and frame, and frame and housing. *Id.* Petitioner's contentions are supported by testimony from Dr. Lequesne. Ex. 1002 ¶¶ 283–285; Ex. 1021 ¶¶ 2–19.

In contesting this ground, Patent Owner relies on the arguments presented against Petitioner's Ground 4. *See* PO Resp. 58–59 (asserting that "Ground 5 fails for the same reasons as Ground 4 despite the addition of Boucheret"). However, for the reasons discussed above, we do not

determine on this record that Petitioner's Ground 4 is deficient. *See supra* § III.F.4.

Patent Owner also argues that Boucheret does not teach one to place isolators between the actuator housing and the motor and between the sub-frame and the motor, as required by claim 24, and between the actuator housing and the sub-frame, as required by claim 25. PO Resp. 59 (citing Ex. 2005 ¶ 159). On this record, Patent Owner's argument is unavailing. It is not necessary to find precise teachings in the prior art directed to the specific subject matter claimed because inferences and creative steps that a person of ordinary skill in the art would employ can be taken into account. *See KSR*, 550 U.S. at 418. Here, Petitioner has offered declaration evidence that Boucheret's teaching of adding an isolator between an electric motor and a component to which it is mounted in order to reduce NVH would have led one of ordinary skill in the art to add, to Weiler's existing isolator between its motor and actuator housing (i.e. bearing bush 13), a second isolator between Weiler's motor and sub-frame per claim 24, or a second isolator between Weiler's sub-frame and actuator housing per claim 25. Pet. 83 (citing Ex. 1002 ¶ 284). Patent Owner does not argue that the proposed modifications would have been beyond the level of ordinary skill in the art.

For the reasons discussed above, Petitioner has shown persuasively that one of ordinary skill in the art would have had reason to combine the teachings of Weiler and Boucheret in the manner set forth in the Petition with a reasonable expectation of success, and that the resulting combination would have satisfied all limitations of claims 24 and 25. *See* Pet. 83; Pet. Reply 19–23; Ex. 1002 ¶¶ 283–285; Ex. 1021 ¶¶ 2–19. Weighing all the evidence and the parties' arguments, we determine that Petitioner has demonstrated by a preponderance of the evidence that claims 24 and 25 are

unpatentable as obvious over Weiler and Boucheret under 35 U.S.C. § 103(a).

G. Petitioner's Motion to Exclude

Petitioner filed a Motion to Exclude Evidence requesting that Exhibit 2005 ¶¶ 160–166, and Exhibits 2009–2012 and 2016–2018, be excluded. Paper 23 ("Mot. Excl."). Patent Owner filed an Opposition to the Motion (Paper 24), and Petitioner filed a Reply in support of the Motion (Paper 26).

Our general approach for considering challenges to the admissibility of evidence was outlined in *Corning Inc. v. DSM IP Assets B.V.*, IPR2013-00053, Paper 66, 19 (PTAB May 1, 2014). As stated in *Corning*, similar to a district court in a bench trial, the Board, sitting as a non-jury tribunal with administrative expertise, is well-positioned to determine and assign appropriate weight to evidence presented. *Id.* (citing *Donnelly Garment Co. v. NLRB*, 123 F.2d 215, 224 (8th Cir. 1941) (stating, in the context of reviewing an administrative determination of the National Labor Relations Board based on findings by a Trial Examiner, "We think that experience has demonstrated that in a trial or hearing where no jury is present, more time is ordinarily lost in listening to arguments as to the admissibility of evidence and in considering offers of proof than would be consumed in taking the evidence proffered . . . . One who is capable of ruling accurately upon the admissibility of evidence is equally capable of sifting it accurately after it has been received . . . .")).

Moreover, "there is a strong public policy for making all information filed in an administrative proceeding available to the public." *Liberty Mut. Ins. Co. v. Progressive Cas. Ins. Co.,* CBM2012-00010, Paper 59, 40 (PTAB Feb. 24, 2014). Rather than excluding evidence that is allegedly hearsay, confusing, misleading, untimely, and/or irrelevant, we may simply not rely

on it, if appropriate under the circumstances, or give it little or no probative weight, as appropriate, in our analysis.

"In an *inter partes* review, we regard it as the better course to have a complete record of the evidence to facilitate public access, as well as appellate review." *Sony Computer Entm't Am. LLC v. Game Controller Tech. LLC*, IPR2013-00634, Paper 32, 31 (PTAB Apr. 14, 2015); *see also Gnosis S.p.A. v. S. Alabama Med. Sci. Found.*, IPR2013-00118, Paper 64, 43 (PTAB June 20, 2014) (citing *Donnelly*, 123 F.2d at 224 ("If the record on review contains not only all evidence which was clearly admissible, but also all evidence of doubtful admissibility, the court which is called upon to review the case can usually make an end of it, whereas if evidence was excluded which that court regards as having been admissible, a new trial or rehearing cannot be avoided.")).

Petitioner seeks to exclude portions of Dr. Stein's declaration testimony relating to secondary considerations, Exhibit 2005 ¶¶ 160–166, as unsupported and unreliable expert testimony. *See* Mot. Excl. 1–4. Petitioner argues that Dr. Stein's opinions at issue "are simply his conclusory 'understandings' of the law and Exhibits 2010 and 2016 (and potentially Exhibits 2011 and 2012, implicitly)," and are "bereft of any substantive analysis." *Id.* at 2.

Petitioner's objections go more to the weight to be afforded Dr. Stein's testimony, rather than its admissibility. *See Liquid Dynamics Corp. v. Vaughan Co.*, 449 F.3d 1209, 1221 (Fed. Cir. 2006). We have broad discretion to assign the proper weight to declarations. *Velander v. Garner*, 348 F.3d 1359, 1371 (Fed. Cir. 2003). In addition, whether Patent Owner failed to provide sufficient evidence or neglected to supply all of the necessary analysis does not negate the relevance of that evidence. We also

note that this portion of Petitioner's Motion is moot because of our decision above that the challenged claims are unpatentable even considering this evidence. Accordingly, this portion of the Motion is *denied*.

Petitioner also moves to exclude Exhibits 2009–2012 and 2016–2018. *See* Mot. Excl. 4–14. We note that Patent Owner proffered these exhibits to support its contentions regarding secondary considerations of non-obviousness. *See generally* PO Resp. 60–63 (citing Exs. 2009–2012, 2016–2018); Ex. 2005 ¶¶ 163, 165, 166 (citing Exs. 2010, 2016). This portion of Petitioner's Motion is moot because of our decision above that Patent Owner failed to show a nexus between the evidence and the claimed inventions. *See supra* § III.E. Because we do not rely on any of Exhibits 2009–2012 and 2016–2018 in a manner adverse to Petitioner, this portion of the Motion is *dismissed* as moot.

H. Jurisdiction over Expired Patents

Patent Owner argues that the Board does not have jurisdiction over expired patents. PO Resp. 63–65. In particular, Patent Owner asserts:

> When a patent expires, . . . the public franchise ceases to exist and the franchisee (e.g., the patent owner) no longer has the right to exclude others. At most, the franchisee may be entitled to collect damages from the public franchise that formerly existed through an infringement action in district court. But because the public franchise no longer exists, the PTO has nothing in its authority to cancel or amend. Expiration removes the patent from the PTO's jurisdiction and returns it to the sole jurisdiction of the Article III courts, which have exclusive authority to govern claims for damages. If this were not so, the PTO would purport to have authority to retroactively modify a public franchise that no longer exists, in a setting where the expired public franchise does not enjoy any presumption of validity, and in which amendment of claims is no longer practical, let alone permitted.

Id. at 63–64. Patent Owner also argues that a patent owner's ability to move to amend its claims is integral to the IPR process. *Id.* at 64 (citing 35 U.S.C. § 316(a)(9); 37 C.F.R. § 42.121). Patent Owner asserts that "[t]his opportunity for amendment explains the lower burden of proof required to invalidate a patent in an IPR as compared to in an Article III proceeding in district court, where the patent-in-suit cannot be amended." *Id.* According to Patent Owner, "[i]t is clear that Congress did not intend to grant the Board jurisdiction to consider an IPR of an expired patent" because "expired patents would be subject to the lower burden of proof for invalidation without the justification of the opportunity to amend the expired patents." *Id.* at 65. We disagree.

"Inter partes review is 'a second look at an earlier administrative grant of a patent.'" *Oil States Energy Servs., LLC v. Greene's Energy Grp., LLC*, 138 S. Ct. 1365, 1374 (2018) (quoting *Cuozzo*, 136 S. Ct. at 2144)). Our reviewing court has affirmed final determinations of the Board with respect to expired patents in an *inter partes* review. *See, e.g.*, *Wasica Fin. GmbH v. Cont'l Auto. Sys., Inc.*, 853 F.3d 1272, 1279 (Fed. Cir. 2017) (noting that "[t]he Board construes claims of an expired patent in accordance with *Phillips*").

The statutes governing *inter partes* review also do not limit the proceedings to non-expired patents. For example, 35 U.S.C. § 311(b), which sets forth the scope of *inter partes* review, merely refers to patents, with no mention of the expiration date. Further, 35 U.S.C. § 311(c), entitled "Filing Deadline," makes no mention of the expiration date of the patent. Elsewhere, 35 U.S.C. § 315 does limit the filing of IPRs based on civil actions and the serving of complaints, but again makes no mention of the

expiration date of the patent. Patent Owner does not identify any statute that expressly limits *inter partes* review to non-expired patents.

Patent Owner additionally fails to adequately explain why the requirement to establish procedures to allow for amendments to a patent means that expired patents are not subject to *inter partes* review. For example, the statute does not mandate that amendments to the patent be allowed in all cases.

For the above reasons, we do not agree that the Board lacks jurisdiction over expired patents in *inter partes* reviews.

I. Constitutional Challenges

1. Due Process

Patent Owner argues that *inter partes* review proceedings violate due process rights because the Board allegedly has a financial incentive to favor institution and has an unconstitutional structural bias. PO Resp. 65–67. Patent Owner asserts that "the same people making decisions about the merits of an IPR also participate in making financial decisions about the operation of the Board." *Id.* at 66 (citing *Mobility Workx, LLC v. Unified Patents, LLC*, 15 F.4th 1146, 1154 (Fed. Cir. 2021); *id.* at 1165 (Newman, J., dissenting)).

But, the Federal Circuit's holding in *Mobility Workx* directly rejected the argument that Patent Owner attempts to raise here. *See Mobility Workx*, 15 F.4th at 1154 (explaining that even the "leadership APJs' role in budgeting is . . . too remote to constitute a due process violation" and that "[t]he role of other APJs in the budgetary process is even more remote, and even less a due process problem"), 1155 (stating that "congressional control of the USPTO's budget renders any agency interest in fee generation too tenuous to constitute a due process violation"), 1156 ("Mobility has

therefore failed to establish that APJs have an unconstitutional financial interest in instituting AIA proceedings."). In view of this controlling precedent, Patent Owner's argument is not persuasive.

2. Appointments Clause

Patent Owner argues that the Director's delegating authority to institute *inter partes* review to the Board is in conflict with the Supreme Court's decision in *United States v. Arthrex, Inc.*, 141 S. Ct. 1970 (2021). PO Resp. 67–68. In particular, Patent Owner argues that "Board judges are not princip[al] officers and therefore they cannot act alone on behalf of the USPTO by rendering final institution decisions." *Id.* (citing *Arthrex*, 141 S. Ct. at 1985). However, the Federal Circuit already addressed and rejected this argument. *See In re Palo Alto Networks, Inc.*, 44 F.4th 1369, 1377 (Fed. Cir. 2022) ("We conclude that the delegation of authority as to whether to institute IPR and PGR proceedings to the Board and the Director's policy refusing to accept party requests for Director rehearing of decisions not to institute do not violate the Appointments Clause.") In view of this controlling precedent, Patent Owner's argument is not persuasive.

IV. CONCLUSION

For the foregoing reasons, Petitioner has shown by a preponderance of the evidence that claims 5, 7, 8, 14–19, 24, and 25 of U.S. Patent No. 7,021,415 B2 are unpatentable.

In summary:

Claim(s) Challenged	35 U.S.C. §	Reference(s)	Claims Shown Unpatentable	Claims Not Shown Unpatentable
5, 7, 8, 14–19	103(a)	Poertzgen, Boucheret	5, 7, 8, 14–19	
5, 7, 8, 14–19	103(a)	Poertzgen, Boucheret, Drennen	5, 7, 8, 14–19	
5, 7, 8, 14–19	103(a)	Poertzgen, Boucheret, Weiler	5, 7, 8, 14–19	
24, 25	103(a)	Weiler	24, 25	
24, 25	103(a)	Weiler, Boucheret	24, 25	
Overall Outcome			5, 7, 8, 14–19, 24, 25	

V. ORDER

In consideration of the foregoing, it is hereby:

ORDERED that claims 5, 7, 8, 14–19, 24, and 25 of U.S. Patent 7,021,415 B2 have been shown to be unpatentable under 35 U.S.C. § 103(a);

FURTHER ORDERED that Petitioner's Motion to Exclude Evidence (Paper 23) is denied in part and dismissed in part; and

FURTHER ORDERED that because this is a final written decision, parties to the proceeding seeking judicial review of this decision must comply with the notice and service requirements of 37 C.F.R. § 90.2.

FOR PETITIONER:

John R. Hutchins
Paul T. Qualey
Shambhavi Patel
BANNER & WITCOFF, LTD.
jhutchins@bannerwitcoff.com
pqualey@bannerwitcoff.com
spatel@bannerwitcoff.com

FOR PATENT OWNER:

Timothy J. Murphy
William G. Gottschalk
CARLSON, GASKEY & OLDS, P.C.
tmurphy@cgolaw.com
bgottschalk@cgolaw.com