US005697554A

United States Patent [19]

Auwaerter et al.

[11] Patent Number: 5,697,554

[45] Date of Patent: Dec. 16, 1997

[54] METERING VALVE FOR METERING A FLUID

[75] Inventors: **Gerhard Auwaerter**, Stuttgart; **Katsuoki Itoh**, Leonberg; **Rudolf Heinz**, Renningen; **Winfried Moser**, Ludwigsburg; **Christoph Franke**, Wolfenbüttel, all of Germany

[73] Assignee: **Robert Bosch GmbH**, Stuttgart, Germany

[21] Appl. No.: **581,959**

[22] Filed: **Jan. 2, 1996**

[30] **Foreign Application Priority Data**

Jan. 12, 1995 [DE] Germany 195 00 706.9

[51] **Int. Cl.**[6] **F02M 51/06**

[52] **U.S. Cl.** **239/88**; 239/584

[58] **Field of Search** 239/88, 584, 585.1

[56] **References Cited**

U.S. PATENT DOCUMENTS

4,022,166	5/1977	Bart	239/584
4,544,096	10/1985	Burnett	239/88 X
5,452,858	9/1995	Tsuzuki et al.	239/584 X
5,495,957	3/1996	Sturman	239/88

FOREIGN PATENT DOCUMENTS

0324905	7/1989	European Pat. Off. .
0371469	6/1990	European Pat. Off. .
0477400	1/1992	European Pat. Off. .
3533085	3/1987	Germany .

Primary Examiner—Lesley D. Morris

Attorney, Agent, or Firm—Edwin E. Greigg; Ronald E. Griegg

[57] **ABSTRACT**

A metering valve for metering a fluid for a fuel injection valve for internal combustion engines, with a hydraulic displacement amplifier for converting the actuating displacement of a piezoelectric actuator into an increased stroke of the valve needle. Integrating the displacement amplifier spatially into the valve housing in an "O valve" to give a small overall volume is served by providing the lifting piston of the displacement amplifier with an end section of reduced diameter which projects into a recess in the operation piston of the displacement amplifier. A Belleville spring lying in the amplifier chamber bounded by the pistons presses the operating piston against the actuator, and a helical compression spring arranged in the recess concentrically to the end section presses the lifting piston against the valve needle.

20 Claims, 7 Drawing Sheets

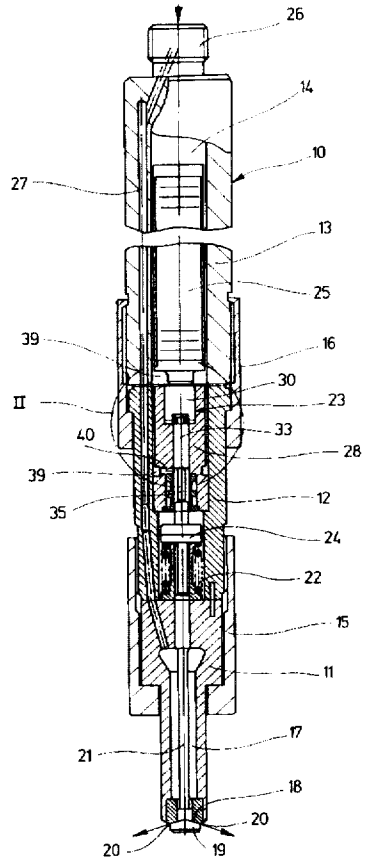

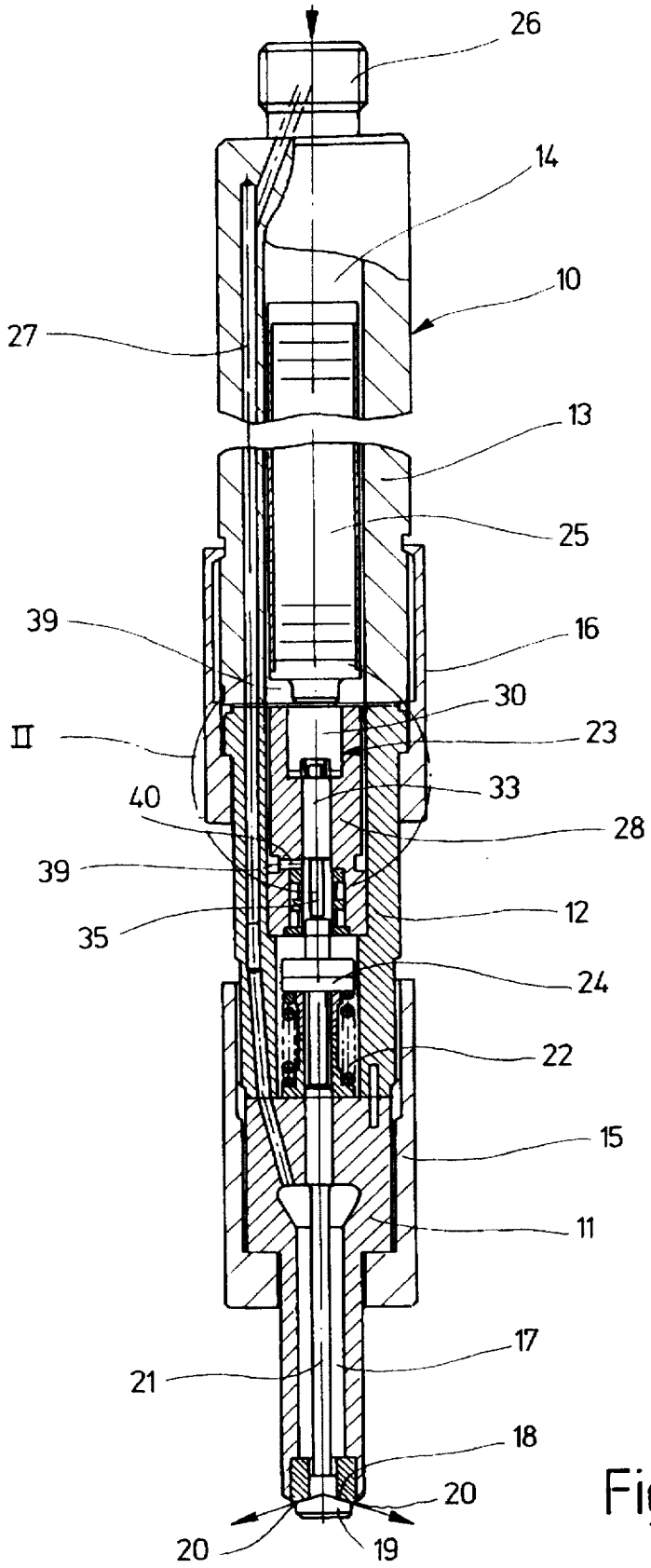
26
14
10
27
13
25
39
16
30
II
23
33
40
28
39
12
35
24
22
15
11
17
21
18
20
20
19

Fig. 1

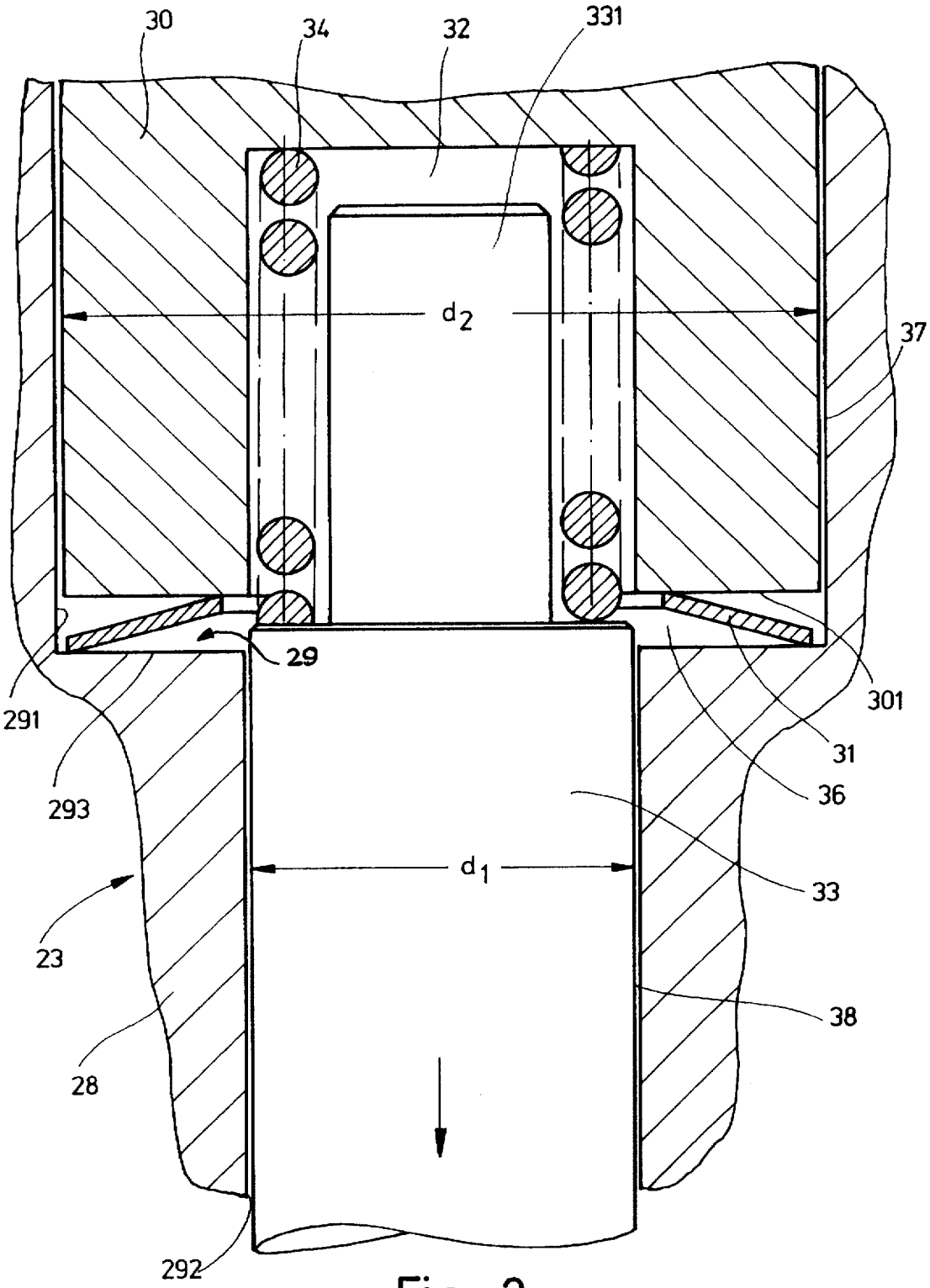

Fig. 2

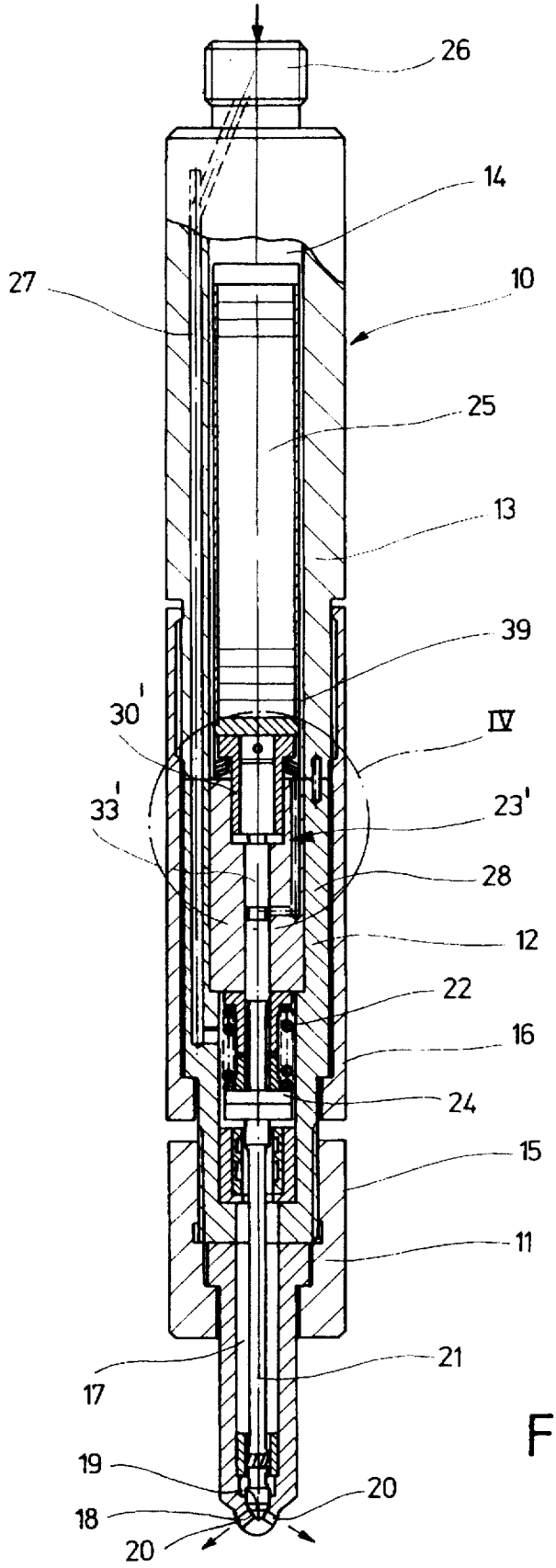

Fig. 3

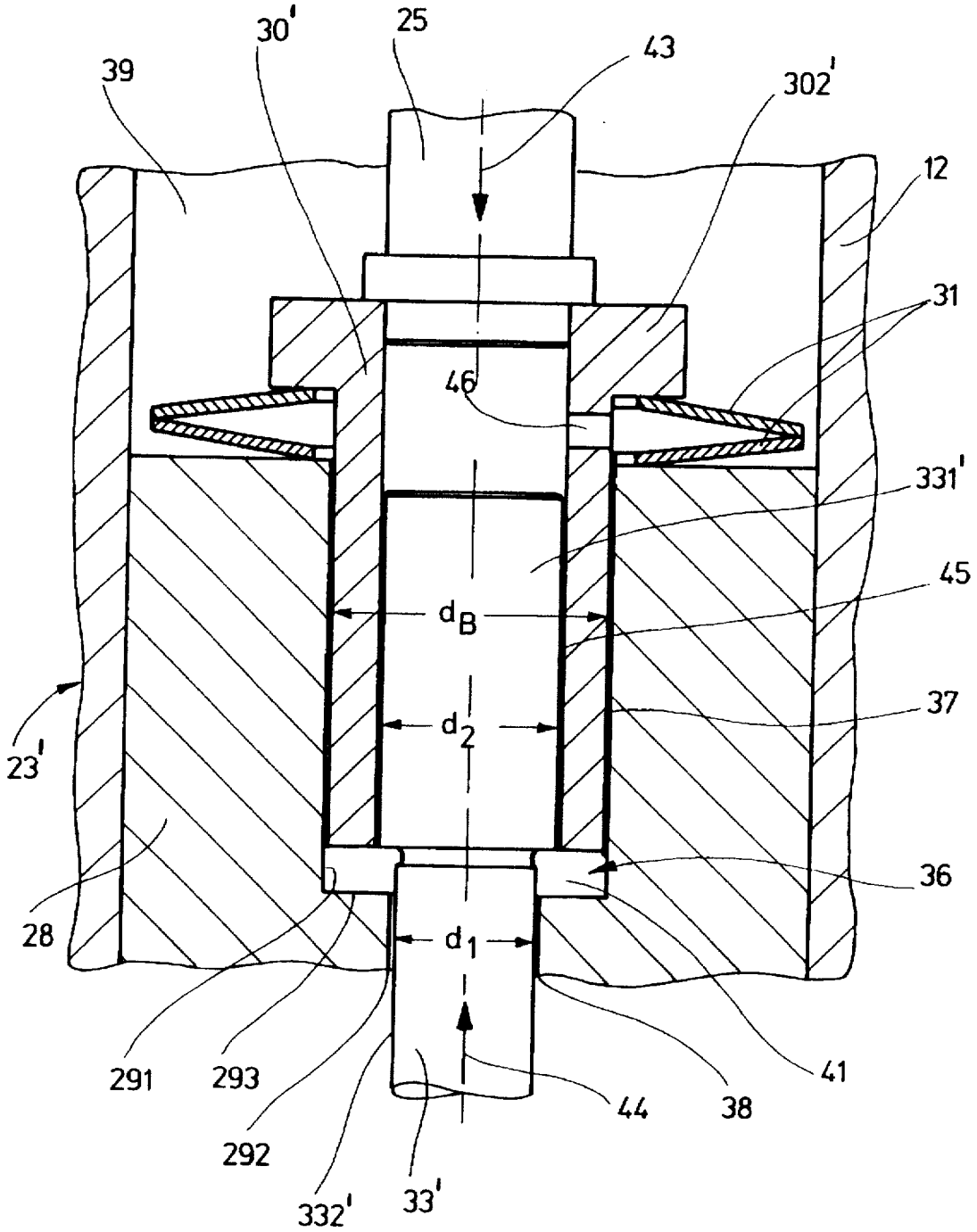
30'
25
43
39
302'
12
31
46
331'
45
d_B
37
d_2
23'
36
28
d_1
291
293
41
44
38
292
332'
33'

Fig. 4

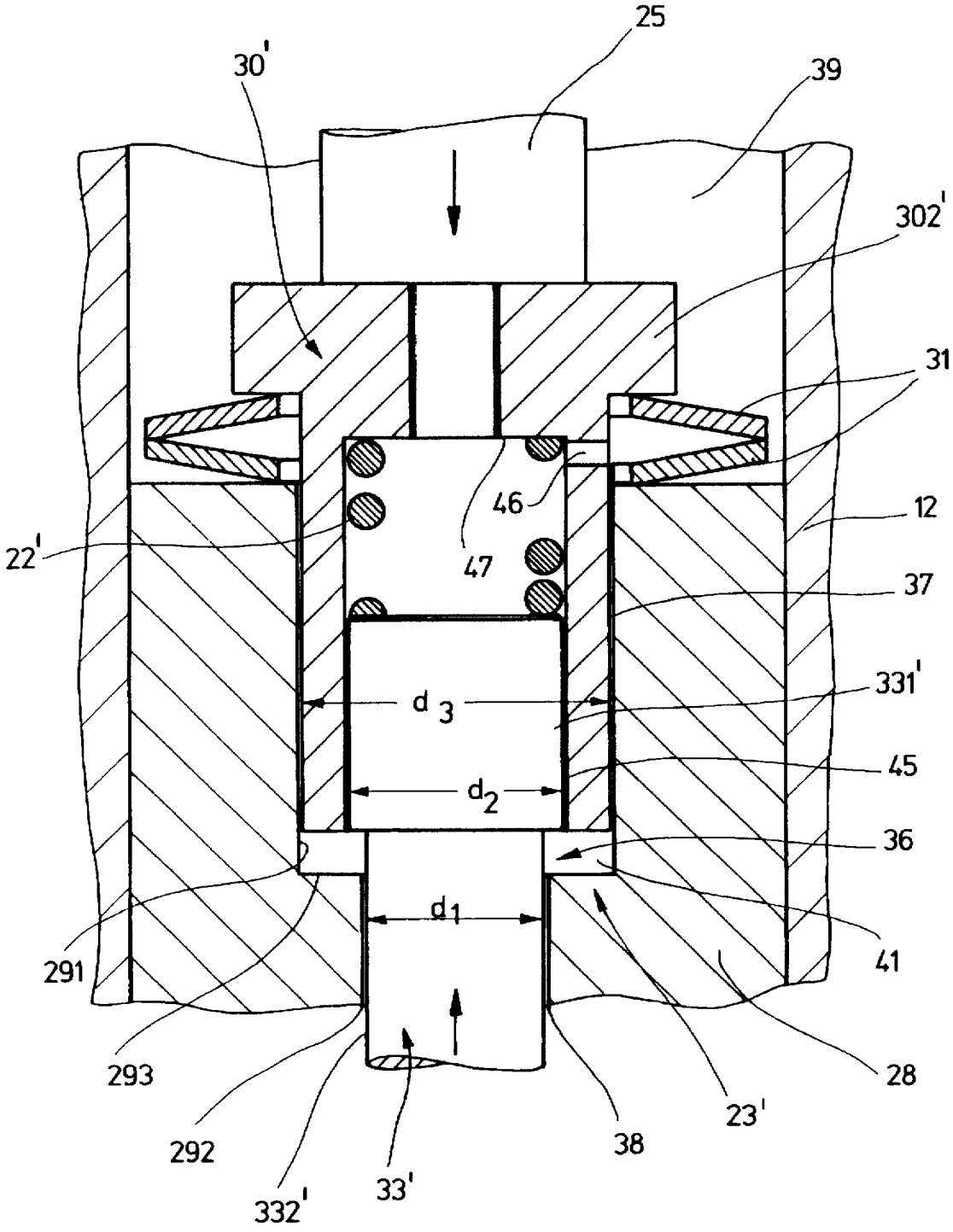
25
30'
39
302'
31
46
12
22'
47
37
331'
d 3
45
d2
36
d1
41
291
28
293
23'
292
38
332'
33'

Fig. 5

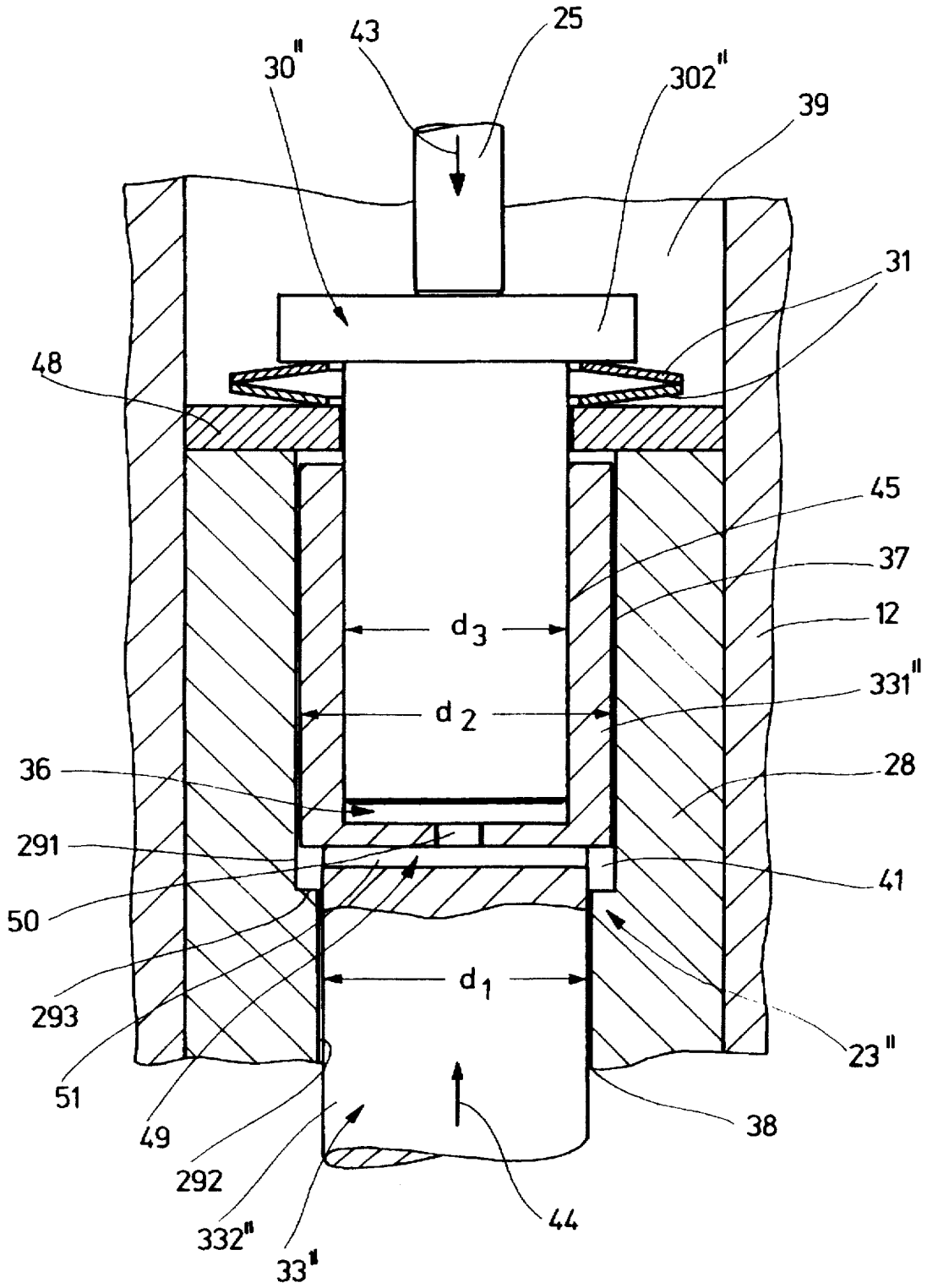
43
25
30"
302"
39
31
48
45
37
12
d3
331"
d2
36
28
291
41
50
d1
293
23"
51
38
49
292
44
332"
33"

Fig. 6

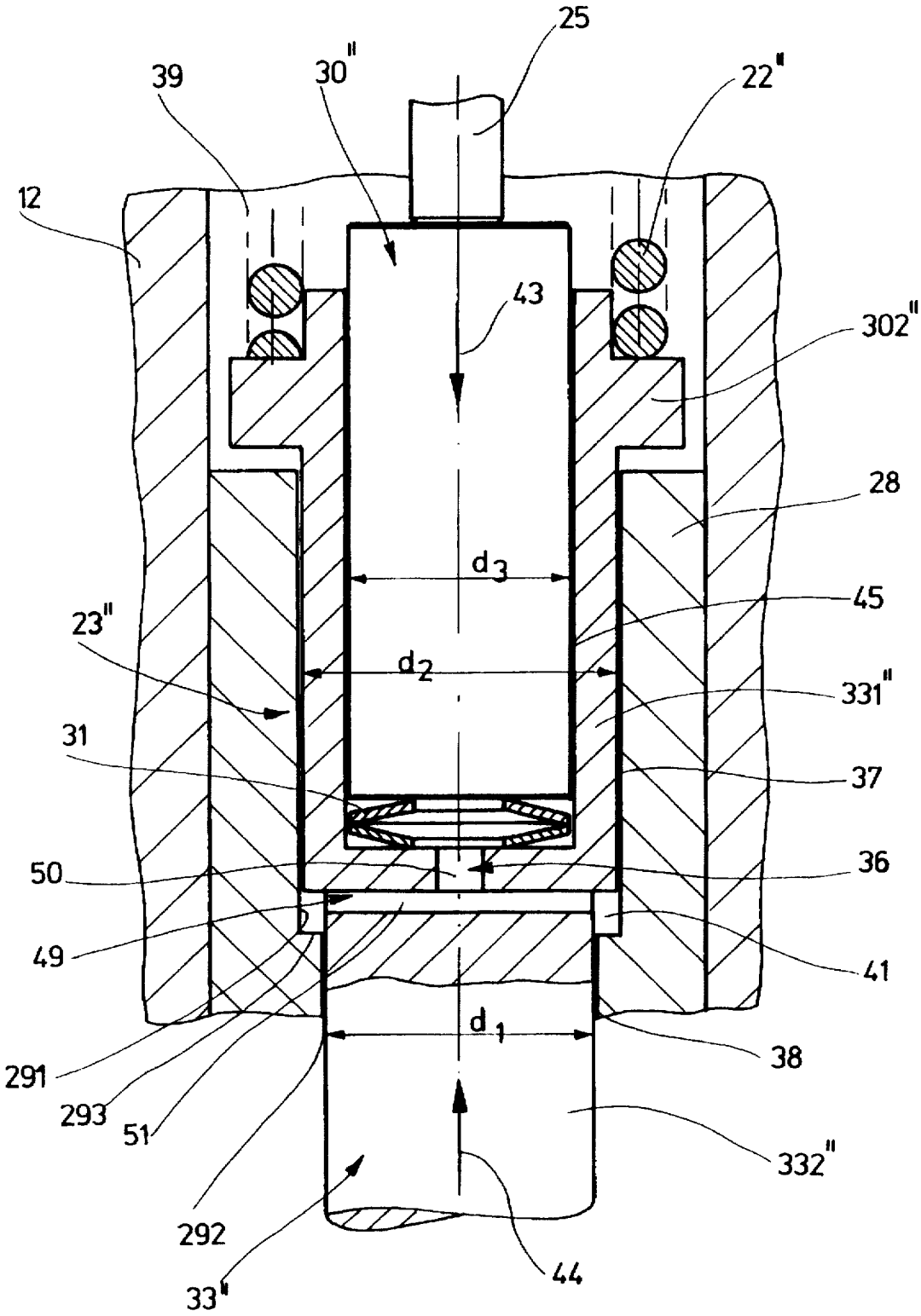
25
39
30"
22"
12
43
302"
28
d3
45
23"
d2
331"
31
37
50
36
49
41
d1
38
291
293
51
332"
292
44
33"

Fig. 7

METERING VALVE FOR METERING A FLUID

PRIOR ART

The invention sets forth a metering valve for metering liquids or gases, especially an injection valve for fuel injection systems of internal combustion engines such as direct-injection diesel engines.

In a known metering valve designed as an injection valve for fuel injection systems (DE 35 33 085 A1), the aim of compensating the effects of temperature changes, wear and manufacturing tolerances on the actuating displacement of the piezoelectric actuator that directly drives the valve needle is served by arranging a hydraulic damping space at that end of the actuator which is remote from the valve needle, the said damping space being bounded by a damping piston rigidly connected to the actuator. The damping space is connected by at least one restrictor gap to a compensating space. The volume made available by the damping space, the restrictor gap and the compensating space is filled with liquid and closed off, the system pressure being regulated with the aid of an overflow valve. By means of this encapsulated damping system, it is possible to ensure a liquid cushion which is completely incompressible and constant in volume in the face of brief dynamic pressure effects such as those produced by the expansion of the actuator upon application of an excitation voltage. Quasi-static processes such as changes in the length of the actuator due to temperature changes, wear and manufacturing tolerances, on the other hand, cause a displacement of the damping piston by displacement of liquid through the restrictor gap and hence compensation thereof, with the result that the constant actuating displacement of the actuator is not affected.

EP 0 477 400 A1 has disclosed a displacement transformer or displacement amplifier for a metering valve of this kind which converts the relatively small actuating displacement of the actuator into a larger stroke of the valve needle. In this arrangement, the deflection of the actuator is introduced into the amplifier chamber by way of the operating piston of the displacement amplifier and is transmitted by the lifting piston to the valve needle, which executes an increased stroke in proportion to the ratio of the piston areas bounding the amplifier chamber at the ends. To compensate for temperature effects, wear and manufacturing tolerances on the actuating displacement of the actuator, the hydraulic chamber has a defined leakage, which is achieved by means of an annular gap between the pistons and the respective valve housing wall and which has a sufficiently high flow resistance. The defined leakage has a leakage rate which is dependent on the maximum stroke time of the actuator.

ADVANTAGES OF THE INVENTION

The metering valve according to the invention has the advantage of spatial integration of a displacement amplifier into a metering valve with the small overall volume which that entails, both in the form of an outward-opening valve with a valve seat arranged on the outside of the housing ("O valve") and in the form of an inward-opening valve with a valve seat arranged in the interior of the housing ("I valve"), which, in particular, permits a small overall length of the valve. The constructional integration meets the requirement for a rapidly closing valve and, at the same time, the risk of cavitation in the amplifier chamber of the hydraulic displacement amplifier during rapid closure is largely counteracted.

In the constructional integration of the displacement amplifier into an "O valve", the lifting piston and the valve needle are separated from one another. Two compression springs ensure that the actuator, the amplifier piston and the valve needle rest against one another without play and move jointly during the opening of the metering valve. During closure, the lifting piston separates from the valve needle, thereby enabling the lifting piston, which preferably has a small mass, to follow the actuator movement or movement of the operating piston connected to the latter very rapidly, thus preventing any significant temporary increase in the volume of the amplifier chamber, which is the cause of cavitation phenomena.

In the constructional integration of the displacement amplifier into an "I valve", the required opposed motion of the actuator and the valve needle during the opening and closure of the metering valve is achieved by the fact that the lifting piston is part of the valve needle and that the amplifier pistons are arranged concentrically to one another, the amplifier chamber having an annular space which surrounds the lifting piston and is arranged at that end of the operating piston which is remote from the actuator. A compression spring, which presses the operating piston against the actuator, and the valve-closing spring ensure that the actuator, the amplifier pistons and the valve needle move jointly during the opening and closure of the metering valve. The risk of cavitation during the rapid closure of the I valve is countered exclusively by means of an overpressure in the amplifier chamber which is greater than the vapour pressure of the liquid which fills the amplifier chamber.

Advantageous developments and improvements of the metering valve specified herein are possible by virtue of the measures presented hereinafter.

In both types of metering valve, the effects of temperature changes, wear and manufacturing tolerances on the actuating displacement of the actuator can be compensated for by providing a respective liquid-filled hollow-cylindrical restrictor gap between the amplifier pistons themselves, on the one hand, and between the amplifier pistons and, in each case, the inner wall of the valve housing, on the other hand, via which restrictor gap the amplifier chamber is connected to a liquid-filled low-pressure space. The volume provided by the amplifier chamber, the restrictor gaps and the low-pressure space is closed off, the liquid in it being under a pressure of about 2–50 bar.

BRIEF DESCRIPTION OF THE DRAWINGS

The invention is explained in greater detail in the following description with reference to exemplary embodiments illustrated in the drawing, in which:

FIG. 1 shows a longitudinal section of a fuel injection valve designed as an O-valve,

FIG. 2 shows an enlarged representation of the detail II in FIG. 1,

FIG. 3 shows a longitudinal section of a fuel injection valve designed as an I-valve,

FIG. 4 shows an enlarged representation of the detail IV in FIG. 3, and

FIGS. 5 to 7 each show the same view as that in FIG. 4 of a modified fuel injection valve of the I type in accordance with three further exemplary embodiments.

DETAILED DESCRIPTION OF THE EXEMPLARY EMBODIMENTS

The injection valve, sketched in longitudinal section in FIG. 1, for a fuel injection system of internal combustion engines as a specific exemplary embodiment of a more

generally conceived metering valve for metering liquids or gases has a housing **10** comprising three housing parts **11**, **12**, **13** which are placed one upon the other, end to end, and in each case joined together by sleeves **15**, **16**. The lower housing part **11** forms what is referred to as the valve body, which has an axial hole **17** with two hole sections of different diameters and at the bottom end of which a valve seat **18** is formed on the outside of the valve body **11**. A valve member **19** is seated on the valve seat **18** and seals off a metering opening **20** which is designed as a spray hole, which can be opened in the course of the opening stroke of the valve member **19** and into which the axial hole **17** emerges. The valve member **19** is formed integrally on a valve needle **21** which is arranged in the axial hole **17** and is guided in axially displaceable fashion in the smaller-diameter hole section of the axial hole **17**. The hollow-cylindrical central housing part **12** accommodates a valve-closing spring **22** and a hydraulic displacement transformer or displacement amplifier **23**. The valve-closing spring **22**, which is designed as a helical compression spring, concentrically surrounds the valve needle **21**, which also projects into the central housing part **12**, and is supported, on the one hand, on a spring plate **24** rigidly connected to the valve needle **21** and, on the other hand, on the end of the valve body **11**. The hydraulic displacement amplifier **23**, which is described in detail below, connects the valve needle **21** to a piezoelectric or magnetostrictive actuator **25**, which is accommodated in a pocket-type recess **14** in the upper housing part **13**. A connecting stub **26** for a fuel-filled injection delivery line at high pressure is provided at the upper end of the upper housing part **13**. As indicated schematically in FIG. **1**, the connecting stub **26** is connected to the larger-diameter hole section of the axial hole **17** in the lower housing part **11**, referred to as the "valve body", by a connecting hole **27** running through the housing parts **13**, **12** and **11**.

When the actuator **25** is not excited, the valve member **19** on the valve needle **21** is pressed onto the valve seat **18** surrounding the metering opening **20** on the outside of the valve body **11**. The valve is closed. If an excitation voltage is applied to the actuator **25**, the actuator **25** moves by an actuating displacement in accordance with the magnitude of the excitation voltage applied. This actuating displacement is transmitted via the displacement amplifier **23** to the valve needle **21**, which executes a corresponding needle stroke, the latter, however, being larger than the corresponding actuating displacement of the actuator **25** owing to the displacement transformation or displacement amplification by the displacement amplifier **23**. The valve member **19** moves from the valve seat **18** and exposes a metering cross section of the metering opening **20**, the size of which depends on the stroke of the valve needle **21**. An injection valve of this kind, with an outward-opening valve needle, is referred to as an "O-valve".

The displacement amplifier **23**, which is illustrated on an enlarged scale in FIG. **2**, is arranged in a housing insert **28** which forms part of the valve housing **10**, is inserted into the central housing part **12** and is supported there on a radial shoulder. The housing insert **28** has a coaxial stepped through-hole **29** with a larger-diameter hole section **291** and a smaller-diameter hole section **292**. Guided in axially displaceable fashion in hole section **291** is an operating piston **30** which is pressed against the actuator **25** (FIG. **1**) by a Belleville spring **31** supported, on the one hand, on the radial transitional shoulder **293** between the two hole sections **291** and **292** and, on the other hand, on that end face **301** of the operating piston **30** which faces the transitional shoulder **293**. The operating piston **30** has a coaxial pocket-type recess **32** introduced into it from its end face **301**. Guided in axially displaceable fashion in the smaller-diameter hole section **292** is a lifting piston **33** which, at its end facing the operating piston **30**, bears an end section **331** of reduced diameter which projects into the recess **32** in the operating piston **30**. A helical compression spring **34** concentrically surrounding the end section **331** is supported, on the one hand, in the bottom of the recess **32** and, on the other hand, on the lifting piston **33**. As can be seen from FIG. **1**, this helical compression spring **34** presses the lifting piston **33** against the valve needle **21**. In order to reduce the mass of the lifting piston **33** and enable the movement of the valve needle **21** to be measured inductively, the diameter of its other end section, that remote from end section **331**, is reduced to give a thin actuating pin **35** (FIG. **1**). Enclosed in the larger-diameter hole section **291**, between the operating piston **30** and the lifting piston **33**, is a liquid-filled amplifier chamber **36** by means of which an actuating displacement of the operating piston **30** is transformed into an amplified stroke of the lifting piston **33**. If, as indicated in FIG. **2**, the diameter of the operating piston **30** is d_2 and the diameter of the lifting piston **33** is d_1, the geometric transformation or amplification ratio is $m=(d_2/d_1)^2$.

Respective annular or hollow-cylindrical restrictor gaps **37** and **38** are provided between the operating piston **30** and the inner wall of hole section **291** and between the lifting piston **33** and the inner wall of hole section **292**. Via these restrictor gaps **37**, **38**, the amplifier chamber **36** is connected to a liquid-filled low-pressure space **39** which includes the interior of housing parts **12** and **13**. A radial hole **40** in the housing insert **28** which emerges into the smaller-diameter hole section **292** ensures a connection between the restrictor gap **38** and the low-pressure space **39**. The total liquid-filled volume occupied by the amplifier chamber **36**, the restrictor gaps **37**, **38** and the low-pressure space **39** is under a pressure of 2–50 bar. The restrictor gaps **37**, **38** are dimensioned in such a way that only quasi-static processes such as changes in the length of the actuator **25**, the valve needle **21** or the amplifier pistons **30**, **33** due to temperature effects, wear and manufacturing tolerances bring about a displacement of the amplifier pistons **30**, **33** by displacement of liquid via the restrictor gaps **37**, **38**, and, as a result, the constant actuating displacement of the actuator **25** is not affected. Brief dynamic pressure effects, on the other hand, such as those which are generated by the expansion of the actuator **25** when an excitation voltage is applied, encounter a completely incompressible and constant-volume liquid cushion in the amplifier chamber **36** and the change in length of the actuator **25** is thus transmitted to the lifting piston **33** and hence to the valve needle **21** with the amplification ratio m.

FIG. **3** shows, in longitudinal section, a fuel injection valve of the "T" type, in which, in contrast to the injection valve of the O type, the valve seat **18** surrounding the metering opening **20** is formed on the inside of the valve body **11** and, to open the valve, the valve needle **21** rises inwards from the valve seat **18**. The direction of motion of the valve needle **21** during opening and closure of the valve is thus opposite to the direction of motion of the valve needle **18** in FIG. **1**. The injection valve, which again has a valve housing **10** made up of three housing parts **11**–**13**, largely corresponds to the injection valve described with reference to FIG. **1** and identical components are thus provided with identical reference numerals. The valve-closing spring **22** which presses the valve member **19** on the end of the valve needle **21** onto the valve seat **18** is again designed as a

helical compression spring, which is here supported on the spring plate **24** rigidly connected to the valve needle **21** and on the housing insert **28** which is inserted into the central housing part **12** and again contains the displacement amplifier **23'**. The displacement amplifier **23'** again connects the valve needle **21** to the piezoelectric (or magnetostrictive) actuator **25**, which lengthens by an actuating displacement when an excitation voltage is applied and raises the valve needle **21** from the valve seat **18** by a corresponding lifting displacement. A fuel injection quantity corresponding to the valve stroke is sprayed out of the fuel-filled axial hole **17** through the metering opening **20**.

To couple the opposing motions of the actuator **25** and the valve needle **21** during the opening and closure of the injection valve, the displacement amplifier **23'** illustrated on an enlarged scale in FIG. **4** is modified in comparison with the displacement amplifier described above. However, identical components are provided with identical reference numerals. The displacement amplifier **23'** again has an operating piston **30'** and a lifting piston **33'** which enclose between them an amplifier chamber **36'**. The amplifier chamber **36'** here has an annular space **41** which surrounds the lifting piston **33'** at the end of the operating piston **30'** remote from the actuator **25**. The operating piston **30'** is pressed against the actuator **25** by two Belleville springs **31** supported on the housing insert **28** and the operating piston **30'**.

In the exemplary embodiment illustrated in FIG. **4**, the operating piston **30'** is of sleeve-shaped or hollow-cylindrical design and is guided in axially displaceable fashion in the larger-diameter hole section **291** of the housing insert **28**. The lifting piston **33'**, which is guided in axially displaceable fashion in the smaller-diameter hole section **292**, is guided by its end section **331'** in the operating piston **30'**, the end section **331'** having a larger diameter than the lifting-piston section **332'** which continues from it. The mentioned annular space **41** of the amplifier chamber **36** is thus bounded at one end by the operating piston **30'** and the end section **331'** of the lifting piston **33'** and, at its other end, by the transitional shoulder **293** between the hole sections **291**, **292** in the housing insert **28**. The diameter designations d_1 for the lifting-piston section **332'**, d_2 for the end section **331'** of the lifting piston **33'** and d_3 for the outside diameter of the operating piston **30'** which are entered in FIG. **4** give a transformation or amplification ratio $m'=d_3^2-d_2^2/d^2-d_1^2$.

If the actuator **25** is excited, it displaces the operating piston **30'** by an actuating displacement in the direction of arrow **43** in FIG. **4**. By means of the displacement amplifier **23'** with the amplification ratio m', the lifting piston **33'** and the valve needle **21** integral with it are displaced by a correspondingly larger stroke in the direction of arrow **44** in FIG. **4**. The valve needle **21** is thereby raised from the valve seat **18** and the metering opening **20** freed for fuel injection.

As in the case of the displacement amplifier **23** in FIGS. **1** and **2**, compensation of the effects of changes in length of the actuator **25**, the valve needle **21** or the amplifier pistons **30'**, **33'** due to temperature changes, wear and manufacturing tolerances is again provided in the case of the displacement amplifier **23'** in FIGS. **3** and **4**. For this purpose, the hollow-cylindrical restrictor gaps **37**, **38** are again provided between the operating piston **30'** and the inner wall of the larger-diameter hole section **291** and between the lifting piston **33'** and the inner wall of the smaller-diameter hole section **292** and connect the amplifier chamber **36** including annular space **41** to a low-pressure space **39**. In addition, a third hollow-cylindrical restrictor gap **45** is provided between the piston sections which slide in one another of the lifting piston **33'** and the operating piston **30'**, i.e. between the end section **331'** of the lifting piston **33'** and the inner wall of the hollow-cylindrical operating piston **30'**, and this restrictor gap **45** is likewise filled with liquid and connected to the low-pressure space **39**. For this purpose, the hollow-cylindrical operating piston **30'** has introduced into it at least one radial hole **46**, which opens freely into the interior of the upper housing part **13**, which forms part of the low-pressure space **39**. The displacement amplifier **23'** illustrated on an enlarged scale and in section in FIG. **5** is modified in relation to the displacement amplifier **23'** in FIG. **4** inasmuch as the valve-closing spring **22'** is integrated into the displacement amplifier **23'**. For this purpose a radial shoulder **47** is formed in the interior of the hollow-cylindrical operating piston **30'**. The valve-closing spring **22'**, which is again designed as a helical compression spring, is supported on this radial shoulder **47** and on the end section **331'** of the lifting piston **33** and hence on the valve needle **21**. All the other components correspond to those in FIG. **4** and are designated by the same reference numerals.

The displacement amplifier **23"** sketched in longitudinal section in FIG. **6** can be inserted into the injection valve of the I type shown in FIG. **3** instead of the displacement amplifier **23'**. Here, the lifting piston **33"** is designed with a cup-shaped end section **331"** which is guided in axially displaceable fashion in the larger-diameter hole section **291** in the housing insert **28**. Adjoining this end section **331"** is a lifting-piston section **332"** with a reduced outside diameter d_1 in relation to the outside diameter d_2 of the end section **331"**, this lifting-piston section being guided in the smaller-diameter hole section **292** in the housing insert **28**. The operating piston **30"** is guided in axially displaceable fashion in the interior of the cup of the end section **331"** of the lifting piston **33"** and is again pressed against the actuator **25** by an assembly of two Belleville springs **31**, the Belleville springs **31** being supported on a flange **302"** formed on the operating piston **30"** and via a washer **48** on the housing insert **28**. The amplifier chamber **36** enclosed between the amplifier pistons **30"** and **33"** again has the annular space **41** which surrounds the lifting-piston section **332"** and is connected to the interior of the cup of the end section **331"** by way of a connecting hole **49**. This connecting hole **49** is made up of a coaxial pocket hole **50**, which is introduced at the bottom of the cup-shaped end section **331"**, and of two diametrically extending radial holes **51**, which are introduced into the lifting-piston section **332"** and open into the pocket hole **50** and the annular space **41**. With the diameters indicated in FIG. **6** for the lifting piston **33"** and the operating piston **30'**, the amplification ratio is given by $m''=d_3^2/d_2^2-d_1^2$. As in the case of the displacement amplifier **23'** in FIG. **5**, the displacement amplifier **23"** shown in FIG. **6** is also provided with the restrictor gaps **37**, **38** and **45**, which are connected to the low-pressure space **39**.

The hydraulic displacement amplifier **23"** illustrated schematically in longitudinal section in FIG. **7** is modified in relation to the displacement amplifier **23"** described with reference to FIG. **6** only insofar as the Belleville springs **31** which press the operating piston **30"** against the actuator **25** are now arranged in the interior of the cup-shaped end section **331"** of the lifting piston **33"** and are supported, on the one hand, on the cup bottom and, on the other hand, on the end of the operating piston **30"** facing the cup bottom. In addition, as a modification in relation to FIG. **3**, the valve-closing spring **22**, which is there supported on the spring plate **24**, can be omitted and, as shown in FIG. **7**, integrated into the displacement amplifier **23"**. The valve-closing spring **22"** is here supported on the flange **302"**, formed on

the operating piston 30", and on the actuator 25 and, at the same time, fixes the latter in the upper housing part 13. The construction and mode of operation of the displacement amplifier 23" in FIG. 7 otherwise corresponds to that of the displacement amplifier 23" in FIG. 6, and components which are the same are thus designated by the same reference numerals.

The foregoing relates to preferred exemplary embodiments of the invention, it being understood that other variants and embodiments thereof are possible within the spirit and scope of the invention, the latter being defined by the appended claims.

We claim:

1. Metering valve for metering fluids in a fuel injection system of an internal combustion engines such as direct-injection diesel engines, comprising a valve housing (10) with a metering opening (20), a valve needle (21) which, together with a valve seat (18) surrounding the metering opening (20), controls the metering opening (20), is guided in axially displaceable fashion in the valve housing (10) and is pressed onto the valve seat (18) under the action of a valve-closing spring (22), a piezoelectric or magnetostrictive actuator (25) which displaces the valve needle (21) axially counter to a closing force of the valve-closing spring (22), and a hydraulic displacement amplifier (23) which converts a rapid change in length of the actuator (25) into a larger stroke of the valve needle (21) and, for this purpose, has an operating piston (30) coupled to the actuator (25), a lifting piston (33) coupled to the valve needle (21), and an amplifier chamber (36) enclosed in the valve housing (10) by the operating and lifting pistons (30, 33) with different piston areas that are guided in axially displaceable fashion therein, in which, for its use as a rapid, outward-opening valve with the valve seat (18) arranged on the outside of the housing (10), the lifting piston (33), which is of small-mass design, projects with an end section (331) of reduced diameter into a recess (32) in the operating piston (30), and a first compression spring (31), which presses the operating piston (30) against the actuator (25) and is designed as a flat spring, is supported on the operating piston (30) and on the valve housing (10), and a second compression spring (34), which presses the lifting piston (33) against the valve needle (21) in the opposite direction and is supported on the lifting piston (33) and on the bottom of the recess (32) in the operating piston (30), are arranged in the amplifier chamber (36).

2. A metering valve as claimed in claim 1, in which a liquid-filled, hollow-cylindrical restrictor gap (37, 38) is provided between the operating piston (30) and the valve housing (10) and between the lifting piston (33) and the valve housing (10), and in that the amplifier chamber (36) is connected by the restrictor gaps (37, 38) to a liquid-filled low-pressure space (39).

3. A metering valve as claimed in claim 2, in which the pressure in the amplifier chamber (36) is made greater than the vapour pressure of the liquid filling the amplifier chamber (36).

4. Metering valve for metering fluids in a fuel injection system of an internal combustion engine, comprising a valve housing (10) with a metering opening (20), a valve needle (21) which, together with a valve seat (18) surrounding the metering opening (20), controls the metering opening (20), is guided in axially displaceable fashion in the valve housing (10) and is pressed onto the valve seat (18) under the action of a valve-closing spring (22), a piezoelectric or magnetostrictive actuator (25) which displaces the valve needle (21) axially counter to a closing force of the valve-closing spring (22), and a hydraulic displacement amplifier (23) which converts a rapid change in length of the actuator (25) into a larger stroke of the valve needle (21) and, for this purpose, has an operating piston (30) coupled to the actuator (25), a lifting piston (33) coupled to the valve needle (21), and an amplifier chamber (36) enclosed in the valve housing (10) by the operating and lifting pistons (30, 33) with different piston areas that are guided in axially displaceable fashion therein, in which, for its use as a rapid, inward-opening valve with the valve seat (18) arranged in the interior of the housing (10), the lifting piston (33', 33") is rigidly connected to the valve needle (21), the lifting piston and the operating piston (30', 33', 30", 33") are arranged concentrically to one another, the amplifier chamber (36) has an annular space (41) which surrounds the lifting piston (33', 33") at an end of the operating piston (30', 30") which is remote from the actuator (25), and a compression spring (31) which presses the operating piston (30', 30") against the actuator (25) and is designed as a flat spring supported on the operating piston (30, 30") and on the valve housing (10).

5. A metering valve as claimed in claim 4, in which the operating piston (30') is of hollow-cylindrical design, and the lifting piston (33') is guided in axially displaceable fashion by an end section (331') in the operating piston (30'), in that the end section (331') of the lifting piston (33'), is adjoined by a lifting-piston section (332') with a diameter that is reduced in comparison, and in that the annular space (41) of the amplifier chamber (36) surrounds the reduced-diameter lifting-piston section (332'), and is bounded at one end by the hollow-cylindrical operating piston (30') and the end section (331') of the lifting piston (33') and, at its other end, by the valve housing (10).

6. A metering valve as claimed in claim 5, in which a respective liquid-filled, hollow-cylindrical restrictor gap (37, 38, 45) is provided between the operating piston (30'; 30") and the valve housing (10), between the lifting piston (33'; 33") and the valve housing (10) and between the concentric sections, sliding upon one another, of the operating piston and the lifting piston (30', 33'; 30", 33"), and in that the amplifier chamber (36) including the annular space (41) is connected to a liquid-filled low-pressure space (39) by the restrictor gaps (37, 38, 45).

7. A metering valve as claimed in claim 5, in which, near to an end facing the actuator (25), the hollow-cylindrical operating piston (30') has an inward-projecting radial shoulder (47), and in that the valve-closing spring (22') is supported on the radial shoulder (478) and on that end of the lifting piston (33') which faces this radial shoulder.

8. A metering valve as claimed in claim 7, in which the pressure in the amplifier chamber (36) is made greater than the vapour pressure of the liquid filling the amplifier chamber (36).

9. A metering valve as claimed in claim 7, in which a respective liquid-filled, hollow-cylindrical restrictor gap (37, 38, 45) is provided between the operating piston (30'; 30") and the valve housing (10), between the lifting piston (33'; 33") and the valve housing (10) and between the concentric sections, sliding upon one another, of the operating piston and the lifting piston (30', 33'; 30", 33"), and in that the amplifier chamber (36) including the annular space (41) is connected to a liquid-filled low-pressure space (39) by the restrictor gaps (37, 38, 45).

10. A metering valve as claimed in claim 4, in which the lifting piston (33") has an end section (331") of cup-shaped design in which the operating piston (30") is guided in axially displaceable fashion, and has a lifting-piston section (332") which adjoins it and the outside diameter of which is

reduced relative to the outside diameter of the end section (331"), and in that the annular space (41) of the amplifier chamber (36) surrounds the reduced-diameter lifting-piston section (332"), is bounded at one end by the end section (331") of the lifting piston (33") and, at its other end, by the valve housing (10), and is connected to the interior of the cup of the end section (331") by way of at least one large-diameter connecting hole (49).

11. A metering valve as claimed in claim 10, in which the large-diameter connecting hole (49) has at least one axial pocket hole (50), which is sunk into a bottom of the cup-shaped end section (331") of the lifting piston (33"), and at least one radial hole (51) which opens into the said pocket hole and is introduced into the lifting-piston section (332") of reduced diameter.

12. A metering valve as claimed in claim 11, in which the pressure in the amplifier chamber (36) is made greater than the vapour pressure of the liquid filling the amplifier chamber (36).

13. A metering valve as claimed in claim 11, in which the compression spring which presses the operating piston (30") against the actuator (35) is supported on the inner cup bottom of the end section (331") of the lifting piston (33") instead of on the valve housing (10).

14. A metering valve as claimed in claim 11, in which a respective liquid-filled, hollow-cylindrical restrictor gap (37, 38, 45) is provided between the operating piston (30'; 30") and the valve housing (10), between the lifting piston (33'; 33") and the valve housing (10) and between the concentric sections, sliding upon one another, of the operating piston and the lifting piston (30', 33'; 30", 33"), and in that the amplifier chamber (36) including the annular space (41) is connected to a liquid-filled low-pressure space (39) by the restrictor gaps (37, 38, 45).

15. A metering valve as claimed in claim 10, in which the compression spring which presses the operating piston (30") against the actuator (35) is supported on the inner cup bottom of the end section (331") of the lifting piston (33") instead of on the valve housing (10).

16. A metering valve as claimed in claim 15, in which the pressure in the amplifier chamber (36) is made greater than the vapour pressure of the liquid filling the amplifier chamber (36).

17. A metering valve as claimed in claim 15, in which a respective liquid-filled, hollow-cylindrical restrictor gap (37, 38, 45) is provided between the operating piston (30'; 30") and the valve housing (10), between the lifting piston (33'; 33") and the valve housing (10) and between the concentric sections, sliding upon one another, of the operating piston and the lifting piston (30', 33'; 30", 33"), and in that the amplifier chamber (36) including the annular space (41) is connected to a liquid-filled low-pressure space (39) by the restrictor gaps (37, 38, 45).

18. A metering valve as claimed in claim 4, in which a respective liquid-filled, hollow-cylindrical restrictor gap (37, 38, 45) is provided between the operating piston (30'; 30") and the valve housing (10), between the lifting piston (33'; 33") and the valve housing (10) and between the concentric sections, sliding upon one another, of the operating piston and the lifting piston (30', 33'; 30", 33"), and in that the amplifier chamber (36) including the annular space (41) is connected to a liquid-filled low-pressure space (39) by the restrictor gaps (37, 38, 45).

19. A metering valve as claimed in claim 4, in which the pressure in the amplifier chamber (36) is made greater than the vapour pressure of the liquid filling the amplifier chamber (36).

20. A metering valve as claimed in claim 1, in which the pressure in the amplifier chamber (36) is made greater than the vapour pressure of the liquid filling the amplifier chamber (36).

* * * * *