United States Patent [19]

Cotter et al.

[11] **Patent Number: 4,684,067**

[45] **Date of Patent: Aug. 4, 1987**

[54] **TWO-STAGE, HYDRAULIC-ASSISTED FUEL INJECTION NOZZLE**

[75] Inventors: **David H. Cotter**, Coopersville; **Richard F. Teerman**, Wyoming; **Robert C. Timmer**, Grandville, all of Mich.

[73] Assignee: **General Motors Corporation**, Detroit, Mich.

[21] Appl. No.: **842,553**

[22] Filed: **Mar. 21, 1986**

[51] **Int. Cl.**[4] **F02M 45/00**

[52] **U.S. Cl.** **239/533.3**; 123/467; 137/489.5; 239/533.8

[58] **Field of Search** 239/88–96, 239/533.3–533.12, 585, 583; 137/489.5; 123/461, 506

[56] **References Cited**

U.S. PATENT DOCUMENTS

3,910,503	10/1975	Barber	239/96 X
3,997,117	12/1976	Kohler et al.	239/533.8
4,269,360	5/1981	Kopse	239/533.8
4,403,740	9/1983	Eblen et al.	239/553.2
4,448,356	5/1984	Nakajima et al.	239/533.5
4,475,515	10/1984	Mowbray	239/88 X
4,573,433	2/1986	Deckard	239/88
4,594,097	10/1985	Aoki et al.	239/533.3 X
4,598,863	7/1986	Kunesaka	239/96

Primary Examiner—Andres Kashnikow
Assistant Examiner—Kevin Patrick Weldon
Attorney, Agent, or Firm—Arthur N. Krein

[57] **ABSTRACT**

A fuel injection nozzle is provided with a pressure actuated injection valve with a first spring and a second spring operatively associated therewith to permit two stage opening of the injection valve, these spring also controlling opening movement of a valve during the injection cycle in the mid to higher speed range of engine operation to allow pressurized fuel to act on the stem end of the injection valve to effect its closure at a higher valve closing pressure than the valve closing pressure from idle to a predetermined mid-speed range of engine operation.

3 Claims, 2 Drawing Figures

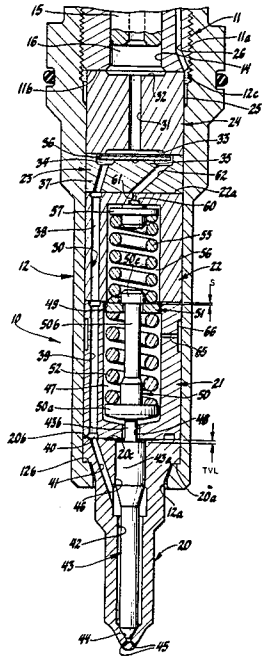

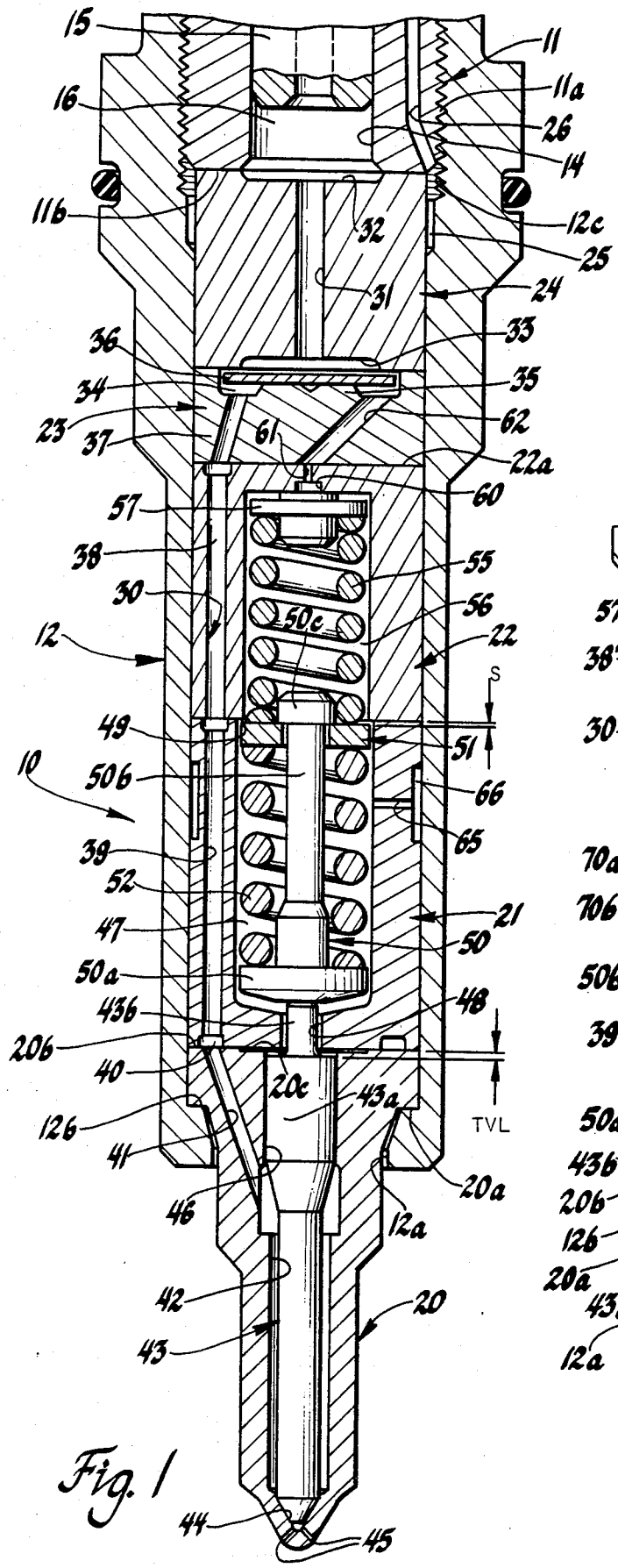
15
11
11a
16
26
14
11b
12c
32
25
31
24
36
33
34
35
23
37
62
61
22a
57
60
38
55
30
56
50c
22
12
S
49
51
10
50b
66
39
65
52
21
47
50
50a
48
43b
20b
40
20c
43a
12b
TVL
41
20a
46
12a
42
20
43
44
45

Fig. 1

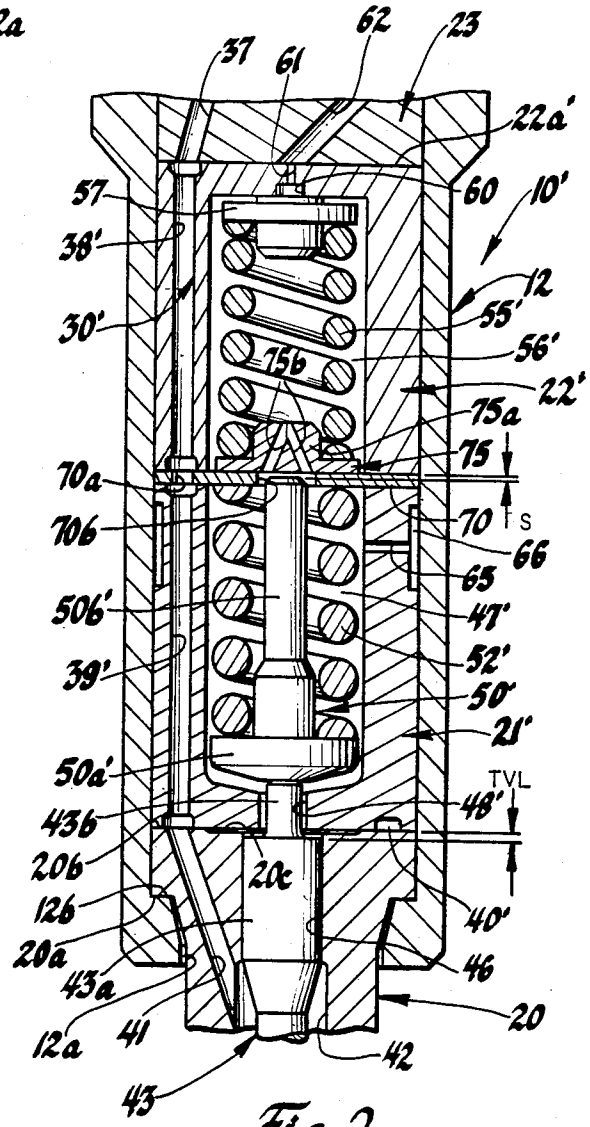
37
61
62
23
22a'
57
60
10'
38'
12
30'
55'
56'
75b
22'
75a
75
70a
70
S
70b
66
65
50b'
47'
52'
39'
50'
21'
50a'
TVL
48'
43b
20b
20c
12b
40'
20a
46
43a
20
12a
41
42
43

Fig. 2

TWO-STAGE, HYDRAULIC-ASSISTED FUEL INJECTION NOZZLE

FIELD OF THE INVENTION

This invention relates to fuel injection nozzles as used in diesel engines and, in particular, to a two-stage, hydraulic-assisted fuel injection nozzle.

DESCRIPTION OF THE PRIOR ART

The desirability of controlling the valve lift of a diesel fuel injection nozzle in two stages so as to provide for a first stage, as for pilot injection or for an idle engine mode of operation, during which a limited quantity of fuel is injected into the combustion chamber with which the injection nozzle is associated and then to provide for a second stage so as to increase the quantity of fuel to be injected into the combustion chamber as engine speed increases has been recognized. Various arrangements have been proposed to accomplish such two stage injection as, for example, by the use of two springs of different bias forces as disclosed, for example, in U.S. Pat. No. 4,448,356 entitled "Double-Injection Type Fuel Injection Valve" issued May 15, 1984 to Nakajima et al or by the use of two springs and a control piston as disclosed, for example, in U.S. Pat. No. 4,403,740 entitled "Fuel Injection Nozzle", issued Sept. 13, 1983 to Eblen et al.

In diesel fuel injection nozzles of the type using a conventional pressure actuated needle valve, the valve opening pressure (VOP) is normally greater than the valve closing pressure (VCP). Thus under normal operation of a standard pressure actuated needle valve type fuel injection nozzle for a particular diesel engine application, the needle valve can be set to open at a valve opening pressure (VOP) of 3500 psi and to close at a valve closing pressure (VCP) of approximately 2800 psi. However, it is also realized that any fuel injected at relatively low pressure, such as pressures below 3500 psi down to 2800 psi, during high speed engine operation is not adequately injected for complete atomization due to combustion chamber pressures so as to be completely consumed during the combustion cycle for that injection period.

SUMMARY OF THE INVENTION

The present invention relates to a two-stage, hydraulic-assisted diesel fuel injection nozzle of the type having an injection valve of the pressure actuated needle valve type controlling discharge flow from the spray tip end of the nozzle, with the needle valve being normally biased to a valve closed position by a first preset lower-load spring, the needle valve also being operatively associated with a second high-load spring, whereby the valve will be opened in two stages, as the first low-load spring force is overcome and then the second spring force is overcome by the pressure of fuel supplied to the downstream end of the needle valve, the spring cages housing these springs also being adapted to be supplied with pressurized fuel via a valve controlled orifice passage and one of the spring cages having a drain flow orifice for the drain flow of fuel from the spring cages to a source of low pressure fuel, so that hydraulic fuel pressure can act on the needle valve whereby the valve closing pressure (VCP) can be increased, as desired, to a value substantially greater than the valve opening pressure (VOP), so as to effect a reduction in the duration of injection from approximately a mid-range to high-speed operation, which will eliminate pressure blow-back, reduce smoke, and improve overall engine operation efficiency.

It is therefore a primary object of this invention to provide an improved diesel fuel injection nozzle wherein a pair of valve springs are used to effect the two-stage opening of a pressure actuated needle type injection valve and wherein hydraulic pressurized fuel during engine operation at higher speed ranges is supplied at a controlled rate to the stem side of the needle valve whereby the injection valve can be closed at a preselected high valve closing pressure that is higher than the valve opening pressure.

For a better understanding of the invention as well as other objects and further features thereof, reference is made to the following detailed description of the invention to be read in connection with the accompanying drawings.

BRIEF DESCRIPTION OF THE DRAWINGS

FIG. **1** is a longitudinal cross-sectional view of a diesel fuel injection nozzle in accordance with a preferred embodiment of the invention incorporated into an electromagnetic unit fuel injector, with parts shown in elevation; and,

FIG. **2** is a cross-sectional view of a portion of a diesel fuel injection nozzle in accordance with an alternate embodiment of the invention.

DESCRIPTION OF THE EMBODIMENTS OF THE INVENTION

Referring first to FIG. **1** there is shown a preferred embodiment of a two-stage, hydraulic-assisted fuel injection nozzle, generally designated **10**, in accordance with the invention, which for purpose of illustration only, is shown as being incorporated into a conventional electromagnetic unit fuel injector, only a portion of which is illustrated. The electromagnetic unit fuel injector, for example, may be of the general type disclosed in U.S. Pat. No. 4,392,612 issued July 12, 1983 to John I. Deckard and Robert D. Straub or, as disclosed in U.S. Pat. No. 4,540,122 issued Sept. 10, 1985 to Richard F. Teerman, the disclosures of which are incorporated herein by reference thereto.

In the construction illustrated, the electromagnetic unit fuel injector has an injector housing that includes an injector pump body **11** and a nozzle nut **12** that is threaded to the lower end of the injector body **11** to form an extension thereof. The injector pump body **11** is provided with a stepped bore that defines at the lower end thereof a cylindrical wall or bushing **14** to slidably receive a pump plunger **15** that is externally actuated in a conventional manner, not shown, whereby the pump plunger **15** can be reciprocated through a suction stroke and a pump stroke. The pump plunger **15** together with the bushing **14** defines a variable volume pump chamber **16** at the lower open end of the bushing **14**.

The nozzle nut **12** has an opening **12*a*** at its lower end through which extends the lower end of a combined injector valve body or spray tip **20**, hereinafter referred to as the spray tip **20**. As shown, the spray tip **20** is enlarged at its upper end to provide a shoulder **20*a*** which seats on an internal shoulder **12*b*** provided by the through counterbore in nozzle nut **12**.

Between the spray tip **20** and the lower end of the injector pump body **11**, in the embodiment shown in FIG. **1**, there is positioned, in sequence starting from the

spray tip **20**, a first spring cage **21**, a second spring cage **22**, an inlet member **23** and an inlet director cage **24**, these elements being formed as separate elements for ease of manufacturing and assembly. Nozzle nut **12** is provided with internal threads **12***c* for mating engagement with the external threads **11***a* at the lower end of the injector pump body **11**. The threaded connection on the nozzle nut **12** to the injector pump body **11** holds the spray tip **20**, first and second spring cages **21**, **22** respectively, inlet member **23** and inlet director cage **24** clamped and stacked end-to-end between the upper surface **20***b* of the spray tip **20** and the bottom surface **11***b* of the injector pump body **11**. All of the above-described elements preferably have lapped mating surfaces whereby they are held in pressure sealed relationship to each other. In addition, a predetermined angular orientation of the first and second spring cages **21**, **22**, respectively and the inlet member **23** with respect to each other is maintained in a conventional manner, as well known in the art by means of dowel or alignment pins, not shown.

While a relatively close fit exists between the inner peripheral wall of the nozzle nut **12** and the outer peripheral surface of the first and second spring cages **21**, **22**, respectively, inlet member **23** and the lower portion of the inlet director cage **24**, as is conventional, there is a predetermined diametral clearance between these parts for the venting of fuel back to a relatively low pressure area. In a particular application and for a purpose to become apparent hereinafter, this diametral clearance provides a flow area of 0.54 square mm.

In the construction illustrated, this fuel is drained into a cavity **25**, defined by the internal wall of the nozzle nut **12** and the upper outer peripheral surface of the inlet director cage **24**, and from this cavity **25**, fuel is returned to a drain outlet passage, not shown, via a drain passage **26** provided for this purpose in the lower end of the injector body **11**.

During operation, on a pump stroke of plunger **15**, when fuel is adapted to be pressurized it is adapted to be discharged from pump chamber **16** into the inlet end of a discharge passage means **30** to be described next hereinafter.

An upper part of this discharge passage means **30**, with reference to FIG. **1**, includes a vertical passage **31** extending from an upper recess **32** through inlet director cage **24** for flow communication with an annular recess **33** provided in the lower surface of the inlet director cage **24**.

As shown in FIG. **1**, the inlet member **23** is provided with an enlarged chamber **34** formed therein so as to face the recess **33** and, projecting upwardly from the bottom of the chamber **34** is a protuberance **35** which forms a stop for a circular flat disc check valve **36**. The chamber **34** extends laterally beyond the extremities of the opening defining recess **33** whereby the lower end surface of the inlet director cage **24** will form a seat for the check valve **36** when in a position to close the opening defined by recess **33**.

At least one inclined passage **37** is also provided in the inlet member **23** to connect the chamber **34** with a longitudinal passage **38** that extends through the second spring cage **22** for flow communication with a longitudinal passage **39** extending through the first spring cage **21** so as to open into an annular groove **40** provided in the lower end of the first spring cage **21**. The lower groove **40** is, in turn, connected by at least one inclined passage **41** to a central passage **42** surrounding a needle type injection valve **43** movably positioned within the spray tip **20**. At the lower end of passage **42** is an outlet for fuel delivery with an encircling annular conical valve seat **44** for the injection valve **43** and, below the valve seat **44** are connecting spray orifices **45** in the lower end of the spray tip **20**.

The upper end of spray tip **20** is provided with a bore **46** for guiding opening and closing movement of the injection valve **43**. The piston portion **43***a* of the injection valve slidably fits this bore **46** and has its lower end exposed to fuel pressure in passage **42** and its upper end exposed to fuel pressure in a first spring chamber **47** via an opening **48**, both being formed in first spring cage **21** by a stepped bore, the upper portion thereof having an internal diameter that is greater than the enlarged diameter portion of the stepped bore in the second spring cage **22** whereby the lower surface of cage **22** defines an annular abutment shoulder **49**. A reduced diameter upper end portion **43***b* of the injection valve **43** extends through the central opening **48** in the first spring cage and abuts a first spring seat, generally designated **50**.

In the preferred embodiment shown in FIG. **1**, and as a feature of the invention, the first spring seat **50** includes a lower flange seat **50***a* having a shank **50***b* extending upward therefrom for a predetermined axial extent to terminate at an upper head **50***c*. Compressed between the flange seat **50***a* of the first spring seat **50** and a slotted spring retainer **51** loosely encircling the shank **50***b* for abutment against the upper head **50***c* is a first coil spring **52**, of a predetermined force, which is operative, in cooperation with a second coil spring **55** to be described, to normally bias the injection valve **43** to its closed position shown.

With the injection valve **43** in its closed position shown in FIG. **1**, a predetermined gap TVL (total valve lift) exists between the upper free surface of the piston portion **43***a* thereof and the lower opposing surface of the first spring cage **21**, the upper surface of the spray tip being provided with an annular recessed cavity **20***c* encircling the upper end of this piston portion **43***a*. In addition, a predetermined gap S, for pilot injection, exists between the upper surface of the slotted spring retainer **51** and the annular shoulder **49**. In a particular application, the TVL gap for total valve lift was 0.012 inch while the gap S for pilot injection was 0.004 inch.

In addition, a second coil spring **55** of a predetermined force less than that of the first coil spring **52** is operatively positioned in the spring cavity **56** of the second spring cage **22** so that its lower one end abuts against the slotted spring retainer **51** while its opposite or upper end abuts against a disc valve **57** to normally bias this disc valve **57** into a position blocking flow through a passage means **60** having a flow control orifice **61** thereabove of predetermined cross-sectional flow area opening centrally through the base portion **22***a* of the second spring cage **22**. This flow orifice **61** and passage means **60** being adapted to receive pressurized fuel during a pump stroke of the plunger **15** via an inclined passage **62** provided in the inlet member **23** so as to be in flow communication at one end with the flow orifice **61** and at its opposite end with the chamber **34**.

As should now be apparent, the spring chambers **47** and **56** which are, in effect, in direct flow communication with each other define a spring chamber means **47**, **56** to control fuel pressure in this spring chamber means **47**, **56**, that normally contains trapped fuel. The first spring cage **21** is provided, in the construction shown, with a radial vent orifice passage **65** of predetermined

cross-sectional flow area so as to extend through the wall thereof to open into an annular groove **66** provided in the outer peripheral surface of the first spring cage **21** that is thus in flow communication with the diametral clearance previously described.

In the particular application, previously referred to, the flow orifices **61** and **65** were each of 0.15 mm diameter so as to provide for a cross-sectional flow area of 0.018 square mm through each of these flow orifices. Thus drain flow from the spring chamber means **47**, **56** is, in effect, controlled by the flow orifice **65** since its flow area is substantially less than the diametral clearance flow area between the inner peripheral surface of the nozzle nut **12** and the outer peripheral surface of the first and second spring cages **21** and **22**, the inlet element **23** and the inlet director cage **24** as previously described. In addition, the passage **60** for the particular application referred to was formed with an internal diameter of 1.64 mm so that with a predetermined spring force applied to the disc valve **57**, this valve will open as the fuel pressure during injection reaches approximately 8000 psi. This pressure, in the engine and injection nozzle application referred to occurs near or slightly above the speed range of engine operation.

Also in the particular application referred to hereinabove, the force of the low-force second spring **55** was preselected so that the needle type injection valve **43** would open at a valve opening pressure (VOP) of 2000 psi and would normally close at a valve closing pressure (VCP) of 1600 psi. In said application, the forces of the **52** and **55** were selected so that further opening movement of the injection valve **43** will begin to occur at a pump injection pressure output of 5000 psi, with increased valve lift to a maximum of 0.012 occurring as injection pressure reaches a predetermined maximum value.

FUNCTIONAL DESCRIPTION

Before describing the functioning operation of the subject two-stage, hydraulic-assisted fuel injection nozzle **10** of the preferred embodiment of the subject invention as shown in FIG. **1**, a brief description of the process for injecting fuel into the cylinder of a direct injected type diesel engine is deemed necessary for a complete understanding of the operation of the subject fuel injection nozzle.

In such a direct injection type diesel engine, fuel at a relatively low pressure, for example at a pressure of approximately 2000 psi can be injected into an associate cylinder effectively during the start of an injection cycle, starting at the idle speed mode of operation and up through the high speed mode of engine operation, since the start of injection is normally set to occur at, for example, between 10°-5°, depending on the engine application, before the associate piston on its compression stroke reaches top dead center (TDC).

Such a low valve opening pressure provides for a reduced variability of the plural injectors used in an engine, thus improving idle quality. In addition, in a direct injection diesel engine, lower injection pressures are preferred so as to reduce idle combustion noise.

As well known in such an engine, the time interval during which fuel is injected into the cylinder will vary as a function of engine speed such that, for example, during idle speed operation the fuel injection cycle can extend through approximately only 5° of crankshaft rotation whereas at high speeds the injection cycle can extend through approximately 30° of crankshaft rotation.

It is also well known in the art, that as engine speed increases as from idle up to a high speed mode of operation, the time period during which the fuel that is being injected into the cylinder can burn progressively decreases due to the increase in operating speed of the engine. Also, because of the discharge flow rate through the injector spray orifices, such as spray orifices **45**, is controlled by the number and sizes of such orifices, and because as engine speed increases an increase in the speed of the pump plunger on its pump stroke also increases. The result is a corresponding increase in the injection discharge pressure developed by the pump, with maximum pressures reaching, for example, 15,000 psi to 25,000 psi, depending on the particular injection pump and engine application being used.

Assuming now that the subject injection nozzle assembly **10** is full of fuel and that the pump plunger **15** is moving downward on a pump stroke and that drain flow from the pump chamber **16** has been blocked, the pressure of fuel in the pump chamber **16** and in the discharge passages in flow communication therewith will be substantially increased. As this fuel discharge pressure increases, the needle valve **43** will lift, against the bias force of the low force spring **55** at a valve opening pressure of 2000 psi, a predetermined amount S, that is 0.004 inches, which is the axial extent through which the slotted retainer **51** can move before it comes into abutment against the shoulder **49** in the construction illustrated. In the particular embodiment shown, and as used in a particular engine application, this will be the maximum lift of the injection valve **43** from an idle mode of engine operation up through a predetermined mid-speed range of engine operation.

Accordingly, through this predetermined range of engine operation, the end of injection will occur as the drain flow from the pump chamber **16** is initiated in a suitable manner as disclosed, for example in the above-identified U.S. Pat. Nos. 4,392,612 and 4,540,122 to permit injection pressure to decrease with the injection valve **43** then closing at a valve closing pressure of 1600 psi. Such a low terminal injection pressure can be tolerated during this relatively low speed mode of engine operation because any such low pressure fuel injected into the cylinder at the end of an injection cycle will have a relatively long time interval in which to burn completely.

Now as engine speed increases slightly over the previously identified mid-speed range, the increased speed of operation of the pump plunger **15** will be such so as to increase the injection pressure to a value of over 8000 psi. As this occurs the flow of this high pressure fuel through the flow orifices **61** into passage **60** will effect unseating of disc valve **57** so as to allow the pressure of fuel in the spring chamber means **47**, **56** to reach a pressure value so as to effect a substantial pressure balance on the injection valve **43** so that when the injection cycle begins to be terminated, as by permitting the drain flow of fuel from the pump chamber **16** to sources of low pressure fuel in the manner, for example, as described hereinabove, the injection valve **43** will be moved to the closed position shown in FIG. **1** at a valve closing pressure (VCP) of approximately 8000 psi.

Thus also, as the speed of the engine further increases, so will the speed of the pump plunger increase resulting in the injection pressures to increase accord-

ingly. Thus at higher engine speeds, the injection pressure will rise substantially so that additional lift of the injection valve **43** will begin to occur as the fuel pressure in the passage **42** acting on the injection valve **43** reaches, for example, 5000 psi in the particular nozzle application being referred to herein, so as to overcome the bias force of the springs **55** and **52** and as injection pressures increase further beyond this pressure level additional valve lift will occur as up to a total valve lift (TVL) of 0.012 inch in the particular application referred to at the maximum high speed operation of the engine, that is, when injection pressure, in this particular application, reaches a maximum pressure of approximately 15,000 psi.

Referring again to the hydraulic-assisted valve closing feature of the invention, it should now be appreciated that by increasing the valve closing pressure of the injection valve **43**, which normally has a lower valve closing pressure than its valve opening pressure at all engine speeds as described, during the upper speed range of engine operation, the hydraulic-assisted closing of the injection valve **43** will, in effect, reduce the duration period of fuel injection, which in turn, will eliminate cylinder blow back, reduce smoke and improve overall engine operating efficiency. Otherwise if fuel is injected into the combustion chamber at a relatively low pressure at the end of an injection cycle while the engine is operating above a predetermined speed for a particular engine this low pressure fuel injected near the end of an injection cycle cannot effect proper penetration into the combustion chamber so as to be fully burned therein during the reduced time interval at which the combustion process occurs during the upper speed mode range of engine operation.

Thus by terminating fuel injection at a relatively high injection pressure above a preselected speed of engine operation, fuel injected at this high pressure will attain sufficient penetration so as to permit combustion thereof.

An alternate embodiment of a two-stage, hydraulic-assist fuel injection nozzle, generally designated **10'**, in accordance with the invention is shown in FIG. **2**, wherein similar parts are designated by similar numerals, but with the addition of a prime (') where appropriate.

In this alternate embodiment, a circular, disc spring retainer **70** is sandwiched between the first spring cage **21'** and the second spring cage **22'** with a suitable clearance between its outer peripheral surface and the inner peripheral surface of the nozzle nut **12**. As shown in FIG. **2**, the disc spring retainer **70** is provided with a passage **70*a*** to effect flow communication between the passages **39'** and **38'** in the first and second spring cages **21'** and **22'**, respectively, thus forming part of the discharge passage means **30'** of this nozzle assembly. In addition the disc spring retainer **70** is provided with a central aperture **70*b*** of a suitably large internal diameter for a purpose to be described.

In this alternate embodiment shown in FIG. **2**, the first spring seat **50'** includes a lower flange seat **50*a'*** with a shank **50*b'*** extending upward therefrom for a predetermined axial extent. The upper free end of this shank **50*b'*** has an external diameter whereby it will be loosely received through the aperture **70*b*** in the disc spring retainer **70**. Thus, in this embodiment, the first coil spring **52'**, of a predetermined force, has one end thereof engaging the flange seat **50*a'*** of the first spring seat **50'** while its opposite end abuts against the disc spring retainer **70** to normally bias the needle valve **43** to its closed position.

In this alternate embodiment, the second coil spring **55'** which in this embodiment is of a predetermined force greater than the force of the first coil spring **52'** is loosely received in the spring cavity **56'** in the second spring cage **22'** whereby one end thereof, the lower end with reference to FIG. **2**, abuts against a second spring retainer **75** that is provided with a central upstanding boss **75*a*** to effect centering of the spring **55'**, while its opposite or upper end abuts against the disc valve **57** to normally bias this disc valve **57** to a position so as to block fluid flow through the passage means **60** and the flow control orifice **61** provided in the center of the base portion **22*a'*** of the second spring cage **22'**. Also, as shown, the boss **75*a*** of this spring retainer **75** is provided with a plurality of inclined passages **75*b*** to effect free flow communication between the spring cavities **56'** and **47'**, the bottom end of these passages **75*b*** opening into the aperture **70*b*** of the disc spring retainer **70** outward of the free end of shank **51*b'*** of the first spring retainer, it being noted that the spring retainer **75** is normally biased into abutment against the upper surface of the disc spring retainer **70**, the position shown in FIG. **2**.

As illustrated in FIG. **2**, the axial extent of the shank **50*b'*** of the first spring seat **50'** and the axial position of the disc spring retainer **70** are preselected so that with the needle valve **43** in its closed position, a predetermined gap S, of, for example, 0.004 inch, exists between the upper free end surface of the shank **50*b'*** and the lower face of the second spring retainer **75**. In the same manner, as described with reference to the FIG. **1** embodiment, a predetermined total valve lift gap (TVL) is also provided for in the alternate embodiment between the upper free surface of the piston portion **43*a*** of the needle valve **43** and the lower opposing surface of the first spring cage **21'**.

Assuming that the spring forces and the valve **57** opening force in this alternate embodiment injection nozzle **10'** are the same as described with reference to the FIG. **1** embodiment, this injection nozzle **10'** will operate in the same manner described with reference to the injection nozzle **10**, except that in the FIG. **2** embodiment, initial injection valve **43** lift is limited by the abutment of the shank **50*b'*** of the first spring retainer **50'** against the lower surface of the second spring retainer **75**. However, as injection pressures increases to 9000 psi and above, the injection valve **43** will move upward carrying the first spring seat **50'** with it thus causing corresponding upward movement of the second spring retainer **75** against the bias force.

It will be appreciated by those skilled in the art that the bias forces of the two springs can be selected as desired to provide for initial injection opening at a desired valve opening pressure and additional valve opening at any desired higher pressure and that the valve **57** controlling the hydraulic-assist valve closing feature can be designed so as to open at any predetermined pressure as desired, either by controlling the bias force of the associated spring(s) or by increasing the flow area of the orifice **61** in the constructions illustrated.

Accordingly, while the invention has been described with reference to the structures disclosed herein, it is not confined to the specific details set forth, since it is apparent that many modifications and changes can be made by those skilled in the art. This application is therefore intended to cover such modifications or

changes as may come within the purposes of the improvements or scope of the following claims.

The embodiments of the invention in which an exclusive property or privilege is claimed are defined as follows:

1. A fuel injection nozzle for internal combustion engines including, in combination, a nozzle body means having a fuel inlet means at one end thereof and a fuel injection spray orifice means at its opposite spray outlet end with a discharge passage means interconnecting said inlet means to said spray orifice means; a valve seat in said passage means upstream of said spray orifice means, a spring chamber means in said nozzle body means intermediate said ends, a pressure actuated injection valve in said nozzle body movable relative to said valve seat and having one end thereof extending into said spring chamber means, a first spring means and second spring means in said spring chamber means operatively connected to each other and to said injection valve to effect the opening of said injection valve in two stages is controlled by said first spring means and said second spring means with a first stage opening as controlled by said first spring and a second stage opening as controlled by both said first and second springs, a valve controlled orifice passage means in flow communication at one end with said discharge passage means and at its opposite end with said spring chamber means, said valve controlled passage means including an orifice passage and an enlarged passage, a valve means associated with said enlarged passage portion of said valve controlled orifice passage means and normally biased by one of said spring means so as to block flow through said orifice passage means; and, a drain orifice passage means in flow communication at one end with said spring chamber means and connectable at its opposite end to a source of low pressure fuel, said valve means being operative to open at a predetermined pressure whereby pressurized fluid entering said spring chamber means will act on said injection valve to effect closing of said injection valve at a predetermined valve closing pressure substantially higher than said valve opening pressure.

2. A fuel injection nozzle for internal combustion engines including, in combination, a nozzle body means having a fuel inlet means at one end thereof and a fuel injection, spray orifice means at its opposite spray outlet end with a discharge passage means interconnecting said inlet means to said spray orifice means; a spring chamber means in said nozzle body means intermediate said ends, a valve seat in said passage means upstream of said spray orifice means, a pressure actuated injection valve in said nozzle body movable relative to said valve seat and having one end thereof extending into said spring chamber means, a first and second spring means in said spring chamber means operatively connected to each other and to said injection valve, said first spring means being of a force so as to control the initial opening of said injection valve at a first predetermined valve opening pressure, said second spring means being of a force so as to be operative to control the further opening movement of said injection valve at a second predetermined fuel pressure, a valve controlled passage means having a flow control orifice therein in flow communication at one end with said discharge passage means and at its opposite end with said spring chamber means, said valve controlled passage means including a valve means associated with said passage means downstream of said flow control orifice and normally biased by one of said spring means so as to block flow through said orifice passage means; and, a drain orifice passage means in flow communication at one end with said spring chamber means and connectable at its opposite end to a source of low pressure fuel, said valve means being operative to open at a predetermined pressure whereby pressurized fluid entering said spring chamber means will act on said injection valve to effect closing of said injection valve at a predetermined valve closing pressure substantially higher than said valve opening pressure.

3. A fuel injection nozzle for internal combustion engines including, in combination, a nozzle body means having a fuel inlet means at one end thereof and a fuel injection, spray orifice means at its opposite spray outlet end with a discharge passage means interconnecting said inlet means to said spray orifice means; a valve seat in said passage means upstream of said spray orifice means; a spring chamber means in said nozzle body means intermediate said ends, a pressure actuated injection valve in said nozzle body movable relative to said valve seat and having one end thereof extending into said spring chamber means, a first and second spring means in said spring chamber means operatively connected to each other and to said injection valve, said first spring means being of a force so as to control the initial opening of said injection valve at a first predetermined valve opening pressure, said second spring means being of a force so as to be operative to control the further opening movement of said injection valve at a second predetermined fuel pressure, a valve controlled orifice passage means in flow communication at one end with said discharge passage means and at its opposite end with said spring chamber means, said valve controlled passage means including a valve means associated with the orifice passage portion of said valve controlled orifice passage means and normally biased by one of said spring means so as to block flow through said orifice passage means up to a predetermined pressure of fuel in said discharge passage means; and, a drain orifice passage means in flow communication at one end with said spring chamber means and connectable at its opposite end to a source of low pressure fuel, said valve means being operative to open at a predetermined pressure whereby pressurized fluid entering said spring chamber means will act on said injection valve to effect closing of said injection valve at a predetermined valve closing pressure substantially higher than said valve opening pressure.

* * * * *