(19) FEDERAL REPUBLIC OF GERMANY

GERMAN PATENT AND TRADE MARK OFFICE

(12) **Published patent application**

(10) **DE 199 42 816 A 1**

(21) File number: 199 42 816.6

(22) Filing date: 09/ 08/1999

(43) Disclosure date: 03/ 22/2001

(51) Int. Cl.[7]: **F 02 M 51/06**

DE 199 42 816 A 1

(71) Applicant:
DaimlerChrysler AG, 70567 Stuttgart, DE

(72) Inventor:
Klenk, Rolf, Dipl.-Ing., 70327 Stuttgart, DE

(56) Citations:

DE	195 19 191 C2
DE	43 06 073 C1
DE	43 06 072 C2
DE	41 19 467C2
DE	198 02 495 A1
DE	197 44 235 A1
DE	197 14 292 A1
DE	197 08 304 A1
DE	196 42 441 A1
DE	195 48 526 A1

The following information is taken from the documents submitted by the applicant

The request for examination pursuant to § 44 of the German Patent Act has been submitted

(54) Injection valve

(57) (57) An injection valve for internal combustion engines has a valve body in which a valve member is displaceably arranged. In an open position, the valve member releases an opening to the combustion space for injecting fuel into a combustion space of the internal combustion engine. The valve member can be brought into the open position by a final control element. A hydraulic transmission element is arranged between the final control element and the valve member. The hydraulic transmission element has a base body forming a circumferential wall and two membrane-like elements fixedly connected to the base body at the respective end faces. Together with the two membrane-like elements, the base body forms a cavity which is filled with a hydraulic fluid. One membrane-l ke element is associated with the final control element and the other membrane-like element is associated with the valve member. The cross-sectional area of the membrane-like element associated with the final control element is larger than the cross-sectional area of the membrane-like element associated with the valve member.

DE 199 42 816 A 1

Westport Fuel Systems Canada Inc.
EX 2006
Robert Bosch LLC et al. v. Westport Fuel Systems Canada Inc.
IPR2023-00292
Page 1 of 8

Description

The invention relates to an injection valve for internal combustion engines, having a valve body in which a valve member is displaceably arranged, of the type defined in more detail in the preamble of claim 1.

A generic injection valve is known from DE 196 42 441 A1.

In this case, a hydraulic working space, which is located between an adjusting piston acted upon by a final control element and the end of the valve member facing the final control element, translates the path passed from the final control element to the adjusting piston for the valve member in such a way that only a small path of the adjusting piston or a small lengthening of the final control element is necessary for a relatively large deflection of the valve member.

A disadvantage of this injection valve, however, is the sealing problems that inevitably occur in the hydraulic working space.

Further injection valves for internal combustion engines, in which the path or the elongation of a final control element is passed on to the valve member with the aid of a hydraulic transmission, can be found in DE 195 19 191 G2, DE 43 06 072 C2 and DE 43 06 073 C1.

In this case, the final control element acts on a pressure piston, which is adjoined by a reciprocating piston, which then transmits the applied force to the valve member. The different cross-sections of the pressure piston and of the reciprocating piston result in a translation of the path traveled by the final control element, so that the valve member travels a longer path.

However, the injection valves described in these publications have complicated constructions and in all cases the fuel space can only be insufficiently sealed.

DE 41 19 467 C2 takes a different approach and proposes the attachment of an elastomer pad between the final control element and the valve member. Although sealing problems can largely be avoided in this way, the elastomer pad itself has such great internal friction that a not inconsiderable part of the energy applied is consumed as a result.

Reference is also made to DE 195 48 526 A1 for the further prior art with regard to injection valves.

It is the object of the present invention to provide an injection valve for internal combustion engines, by means of which the above-mentioned sealing problems can be avoided, which injection valve can be constructed in a structurally simple manner and used in a simple manner in various internal combustion engines.

According to the invention, this object is achieved by the features mentioned in the characterizing part of claim 1.

Due to the fact that the hydraulic transmission element according to the invention has a base body forming a circumferential wall and two membrane-like elements fixedly connected to the base body at the respective end faces, a self-contained transmission element results between the final control element and the valve member which, due to this structure, does not cause any problems with regard to tightness.

Due to the hydraulic fluid in the cavity, which is formed by the base body and the two membrane-like elements, the force acting from the final control element on the membrane-like element assigned to the final control element is transmitted to the membrane-like element assigned to the valve member and thus to the valve member, whereby the injection of fuel into the combustion space is made possible. This is ensured by the elasticity of the membrane-like elements.

The advantages of this hydraulic transmission, namely the reduction of the loads on the final control element by reducing the elongation thereof and the possible increase in the maximum stroke of the valve member, are thereby fully retained. The increased valve lift makes it possible to increase the fuel throughput in the injection valve, which results in a better mixture preparation for the internal combustion engine.

In this context, the respective cross-sectional areas of the two membrane-like elements can be changed in such a way that different transmission ratios arise and a hydraulic transmission element, which is largely identical in construction and has at least the same external dimensions, can be used without having to carry out modifications on the rest of the injection valve. The use of a standardized injector is thus possible for various internal combustion engines.

Particularly simple sealing of the space in which the final control element is located from a fuel space in which the valve member is located can be achieved in an advantageous further development of the invention in that a sealing device, which in this case acts statically and is not dynamically stressed, is arranged on the outside of the base body. This results in a good sealing effect and a very long service life of the sealing device.

In a further embodiment of the invention, the transmission element can be tightly sealed and filled with the hydraulic fluid. This results in an exchangeable element which can be mounted very easily and optionally replaced by another transmission element, if necessary also with a different transmission ratio due to different cross-sectional areas of the membranes.

Further advantageous embodiments and developments of the invention result from the remaining subclaims and from the exemplary embodiment illustrated in principle below with reference to the drawing.

FIG. 1 shows a section through an injection valve according to the invention;

FIG. 2 shows an enlarged view of the transmission element from FIG. 1;

FIG. 3 shows a first alternative embodiment of the transmission element;

FIG. 4 shows a second alternative embodiment of the transmission element; and

FIG. 5 shows an alternative embodiment of an anti-rotation device for the valve member.

FIG. 1 shows an injection valve **1** for an internal combustion engine (not shown in its entirety). The injection valve **1** has a valve body **2** which is divided into an upper housing **3** and a lower housing **4**. In the present case, the lower housing **4** is screwed into the upper housing **3** to allow easy assembly.

An inner housing **5**, which is located in the lower housing **4** and has an elongated recess **6** for receiving a valve member 7, projects out of the lower housing 4. In the region protruding from the lower housing **4**, a valve seat **8** is formed on the inner housing **5**, against which the valve member **7** rests in its closed position shown in **FIG.** 1. In an open position (not shown), the valve member 7 lifts outwards in the direction of a combustion space (not shown) of the internal combustion engine, which combustion space is located below the inner housing **5**, and thus exposes an opening **9** on the underside of the recess **6**. In the open position of the valve member **7**, fuel is injected into the combustion space. In this case, the fuel passes via a fuel supply line **10** located in the upper housing **3** and a fuel space **11** arranged between the upper housing **3** and the lower housing **4** to the recess **6** in the inner housing **5** and can leave the injection valve **1** through the opening **9**.

The lifting movement of the valve member **7** from the valve seat **8** is provided by a final control element **13** which is arranged in a space **12** of the upper housing **3**and which in the embodiment shown is designed as a piezo stack or piezo

Westport Fuel Systems Canada Inc.
EX 2006
Robert Bosch LLC et al. v. Westport Fuel Systems Canada Inc.
IPR2023-00292
Page 2 of 8

actuator **13**, but in an embodiment not shown can also be designed as a magnetic actuator. The piezo actuator **13** is connected in a manner known per se, but not shown, via electrical connecting lines to an electrical control device which is provided for controlling the energization of the piezo actuator **13**.

Between the piezo actuator **13** and the valve member **7** there is a transmission element **14**which is supported on the upper housing **3** and on the inner housing **5**. The transmission element **14** has a base body **15** forming a circumferential wall and two membrane-like elements **16**and **17** which are fixedly connected to the respective end faces of the base body **15**, which in this embodiment is made of steel. Between the base body **15** and the membrane-like elements **16** and **17** , a cavity **18**is thus formed which is filled with a hydraulic fluid, such as, for example, water or oil. The membrane-like elements **16** and **17** can be made of steel, preferably spring steel, rubber or plastic.

The membrane-like element **16** is assigned to the piezo actuator **13** and has a cross-sectional area A_1, whereas the membrane-like element **17** is assigned to the valve member **7** and has a cross-sectional area A_2. In order to be able to reduce the expansion of the piezo actuator **13** necessary for the opening movement of the valve member **7**, the cross-sectional area A_1 of the membrane-like element **16** is larger than the cross-sectional area A_2 of the membrane-like element **17**. As a result, the path traveled by the valve member **7** is longer than the path actually predetermined by the piezo actuator **13**. The valve member **7** can thus be acted upon directly by the piezo actuator **13** via the transmission element **14**, the path of the valve member **7** is proportional to the elongation of the piezo actuator **13**, and the injection of fuel into the combustion space depends directly on the actuation of the piezo actuator **13**.

The membrane-like element **17** is connected to the valve member **7** via an intermediate part **19**. The connection of the intermediate part **19** to the membrane-like element **17** can take place in any desired manner. The valve member **7** is screwed into the intermediate part **19**, as a result of which a loss of the valve member **7** can be avoided. In order to return the valve member **7** to the closed position when the final control element **13** is not supplied with current, a return spring **20** acts on the intermediate part **19** and is supported on the other side on the inner housing **5**.

As an alternative to closing the valve member **7** by the return spring **20**, this can also be achieved by the fuel pressure. In this case, the surfaces in the closing direction of the valve member **7**, that is to say the sum of the surfaces of the membrane-like element **17** and of the intermediate part **19**, are larger than the corresponding surface on the sealing side of the valve member 7. This leads to a relief of the return spring **20**, as a result of which this is only necessary in the de-energized state without an applied fuel pressure.

In order to prevent rotation of the valve member **7**, an anti-rotation device **21** is provided which, according to **FIG.** 1, has a projection **22** which engages in a groove **23** extending in the longitudinal direction in the valve member **7**.

The membrane-like element **16** is connected on its side facing away from the cavity **18** to a pressure plate **24** on which a pressure piston **25** acts. The pressure piston **25** is located in the space **12** of the upper housing **3** and is supported with respect to the upper housing **3** by a spring device **26** in the form of a disk spring assembly. The piezo actuator **13** acts on the pressure piston **25** via a pressure piece **27**which has a flat surface on its side facing the piezo actuator **13** and a spherical surface on its side facing the pressure piston **25**. This prevents oblique loading of the piezo actuator **13**. The elongation of the final control element **13** is thus transmitted to the membrane-like element **16**via the pressure piece **27**, the pressure piston **25** and the pressure plate **24**. Furthermore, spacer disks **52** are provided, which make it possible to adjust the play between the pressure piston **25** and the pressure piece **24**, which may be necessary, for example, due to thermal expansion.

The piezo actuator **13** can be prestressed in the space **12** by a prestressing device **28**. In addition to the pressure piece **27**, pressure piston **25** and spring device **26** components arranged from the piezo actuator **13** in the direction of the transmission element **14**, the prestressing device **28** also has an adjusting screw **29**, spacer disks **30** and a further pressure piece **31**. By means of the adjusting screw **29**, which can be screwed into a threaded bore **32** of the upper housing **3**, the pretensioning of the final control element **13** can thus be adjusted very precisely and in a defined manner, since this is supported on the spring device **26** via the pressure piece **27** and the pressure piston **25** against the pressure applied by the adjusting screw **29**. The screw-in depth of the adjusting screw **29** depends on the number of spacer disks **30** previously inserted into the threaded bore **32**. The pressure piece **31** located between the piezo actuator **13** and the adjusting screw **29** has, like the pressure piece **27**, a flat surface on its side facing the piezo actuator **13** and a spherical surface on its side facing the adjusting screw **29**, in order to be able to avoid a load acting obliquely on the piezo actuator **13**. In order to prevent damage to the piezo actuator **13**, the flat surface of the pressure pieces **27** and **31** is polished.

The fuel space **11** is sealed with respect to the space **12** by a sealing device **33** which is located in a groove **34** of the upper housing **3**. The sealing device **33** rests against the base body **15** of the transmission element **14**, resulting in a purely statically acting and non-dynamically loaded sealing device **33**. This reliably prevents fuel from penetrating into the space **12**.

A further sealing device **35** is located between the lower housing **4** and the inner housing **5** in a groove **36** of the inner housing 5. This sealing device **35** is provided for sealing the fuel space **11** from the combustion space. In addition, a sealing device **37** is housed in a groove **38** on the outside of the lower housing **4**, which serves to seal the injection valve **1** in its receiving bore (not shown). Alternatively, it would also be possible to provide a copper ring seal on the end face **53** of the housing **4** facing the combustion space or a sealing cone. A further sealing device **54** is provided between the upper housing **3** and the lower housing **4**, specifically in such a way that the fuel space **11** is sealed with respect to the thread between the upper housing **3** and the lower housing **4**.

In **FIG.** 2, the transmission element **14** of **FIG.** 1 is shown in its own right and it can be seen that the membrane-like elements **16** and **17** are connected to the base body **15** by welds **39**. Alternatively, it would also be conceivable for the membrane-like elements **16** and **17** to be adhesively bonded to the base body **15**, especially if the membrane-like elements **16** and **17** consist of plastic. A pressure plunger **40** is attached to the membrane-like element **17** associated with the valve member **7** and acts on the intermediate part **19**. The transmission element **14** is thus tightly sealed and, as already mentioned above, receives a one-time filling of hydraulic fluid into the cavity **18** before it is welded or glued.

FIG. 3 shows an alternative embodiment of the transmission element **14**, through which a fuel line **41**, which branches off from the fuel supply line **10** in a manner not shown, is passed. In the inflow direction, a check valve **42** is located in the fuel line **41**, which prevents the hydraulic fluid from flowing out of the cavity **18** of the transmission element **14**. In the outflow direction, a throttle element **43** is provided in the fuel line **41**. In this embodiment of the transmission element **14**, the first filling of the cavity **18** would take place by fuel, which could no longer flow out of the cavity **18**with

the aid of the check valve **42** and the throttle element **43**, which could also be replaced by a second check valve in a manner not shown.

FIG. 4 shows a further embodiment of the transmission element **14.** In this case, the base body **15** has two threads **44** and **45** which are attached to both sides of the cavity **18**. By means of screw-in parts **46** and **47** screwed into the threads **44** and **45**, the previously inserted membrane-like elements **16** and **17** can be clamped firmly and the cavity **18** is formed between the membrane-like elements **16** and **17**.This embodiment of the transmission element **14** can be used in particular when the membrane-like elements **16** and **17** are made of rubber.

FIG. 5 shows an alternative embodiment of the anti-rotation device **21**, in which the groove **23** is likewise provided in the valve member **7**. However, in the inner housing **5** there is a stepped through bore **48**,in which a ball **49** is inserted. The ball **49** is pressed against the edge of the bore **48** by means of a spring **50** and is held in its front position by means of a threaded pin **51** and thus prevents a rotation of the valve member 7. As an alternative to the two variants of the anti-rotation device **21**, it would also be possible to design the valve member **7** and the recess **6** with a non-circular cross section, such as, for example, a multi-tooth or polygonal profile.

Patent claims

1. Injection valve for internal combustion engines with a valve body in which a valve member is displaceably arranged, wherein
   - 1.1 in an open position, the valve member releases an opening to the combustion space for injecting fuel into a combustion space of the internal combustion engine,
   - 1.2 the valve member can be brought into the open position by a final control element, and
   - 1.3 a hydraulic transmission element is arranged between the final control element and the valve member,

characterized in that
   - 1.4 the hydraulic transmission element (**14**) has a base body (**15**) forming a circumferential wall and two membrane-like elements (**16**, **17**)fixedly connected to the base body (**15**) at the respective end faces,
   - 1.5 the base body (**15**) forms a cavity (**18**) with the two membrane-like elements (**16**,**17**), which cavity is filled with a hydraulic fluid,
   - 1.6 one membrane-like element (**16**) is assigned to the final control element (**13**) and the other membrane-like element (**17**) is assigned to the valve member (**7**), and
   - 1.7 the cross-sectional area ($_{A1}$) of the membrane-like element (**16**) associated with the final control element (**13**) is larger than the cross-sectional area ($_{A2}$) of the membrane-like element (**17**) associated with the valve member (**7**).

2. Injection valve according to claim 1, characterized in that a sealing device (**33**) for sealing a space (**12**)in which the final control element (**13**) is located is arranged on the outside of the base body (**15**) opposite a fuel space (**11**) in which the valve member (**7**) is located.

3. Injection valve according to claim 1 or 2, characterized in that the transmission element (**14**) is tightly sealed and filled with a hydraulic fluid.

4. Injection valve according to claim 1 or 2, characterized in that the transmission element (**14**) is integrated in a fuel line (**41**), a non-return valve (**42**) being provided in the fuel line (**41**) in the inflow direction, and a throttle element (**43**) or a further check valve being provided in the fuel line (**41**) in the outflow direction.

5. Injection valve according to one of claims 1 to 4, characterized in that a return spring (**20**) is provided, by means of which the valve member (**7**) can be brought into a closed position when the final control element (**13**) is not actuated.

6. Injection valve according to one of claims 1 to 5, characterized in that the valve member (**7**) is guided relative to the valve body (**2**) by means of an anti-rotation device (**21**).

7. Injection valve according to one of claims 1 to 6, characterized in that the membrane-like element (**17**) assigned to the valve member (**7**) is connected to an intermediate part (**19**) which is screwed to the valve member (**7**).

8. Injection valve according to one of claims 1 to **7**, characterized in that a prestressing device (**28**) is arranged in the valve body (**2**) in order to prestress the final control element (**13**).

9. Injection valve according to claim 8, characterized in that the prestressing device (**28**) has a pressure piston (**25**) which is arranged between the final control element (**13**)and the membrane-like element (**16**) assigned to the final control element (**13**) and is supported on the valve body (**2**) via a spring device (**26**), and in that the prestressing device (**28**) has an adjusting screw (**29**) which can be screwed into the valve body (**2**), it being possible to adjust the prestress of the final control element (**13**) via the adjusting screw (**29**)and the spring device (**26**) assigned to the pressure piston (**25**).

10. Injection valve according to claim 9, characterized in that pressure pieces (**27**, **31**) are arranged in each case between the pressure piston (**25**) and the final control element (**13**) and between the adjusting screw (**29**) and the final control element (**13**), which pressure pieces each have a flat surface on the sides assigned to the final control element (**13**) and a spherical surface on the sides facing the pressure piston (**25**)and the adjusting screw (**29**).

11. Injection valve according to one of claims 1 to 10, characterized in that the valve member (**7**) lifts off from the valve seat (**8**) in the direction of the combustion space in order to reach the open position.

12. Injection valve according to one of claims 1 to 11, characterized in that the valve member (**7**) can be acted upon directly by the final control element (**13**) via the transmission element (**14**).

13. Injection valve according to one of claims 1 to 12, characterized in that the final control element (**13**) is designed as a piezo actuator or as a magnetic actuator.

Related 2 page(s) of drawings

– Blank page –

Number: **DE 199 42 816 A1**
Int. Cl.[7]: **F 02 M 51/06**
Disclosure date: March 22, 2001

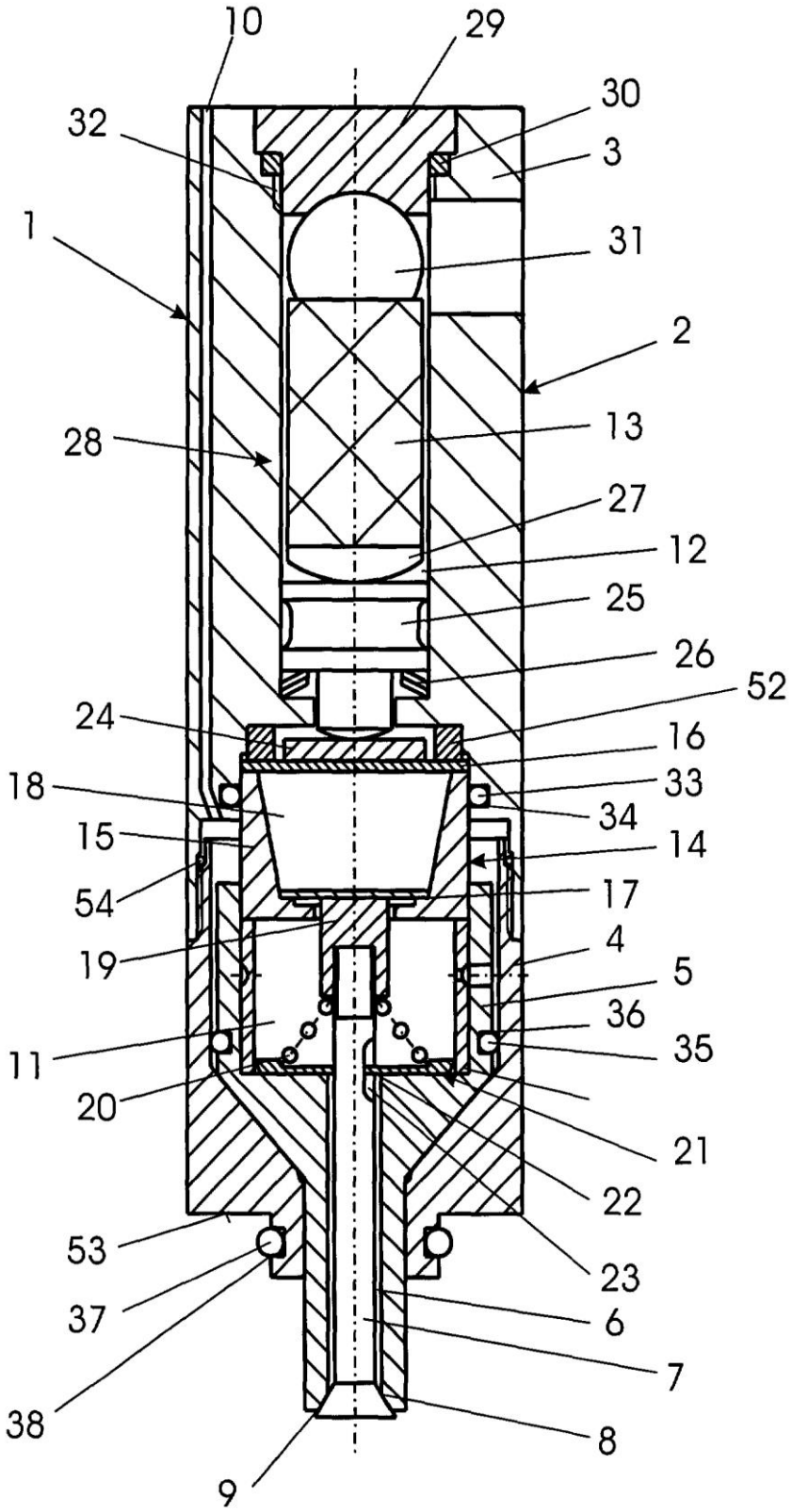

Fig. 1

Number: DE 199 42 816 A1
Int. Cl.[7]: F 02 M 51/06
Disclosure date: March 22, 2001

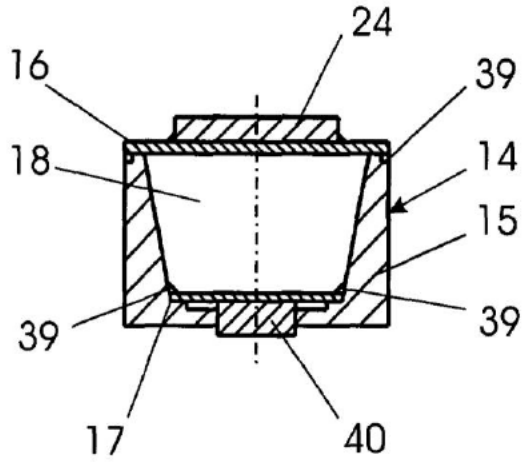

Fig. 2

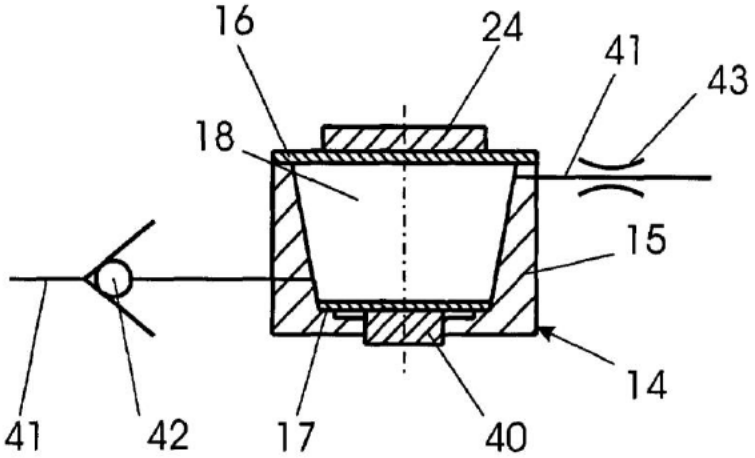

Fig. 3

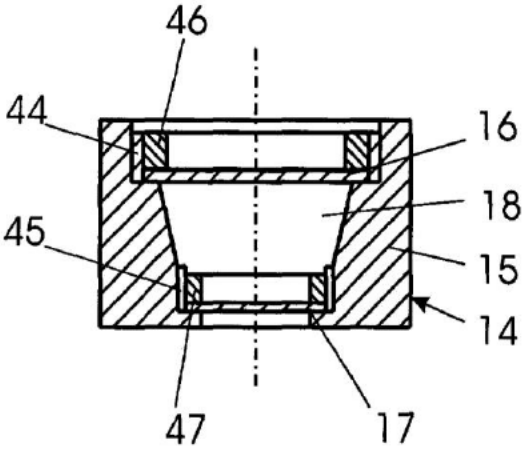

Fig. 4

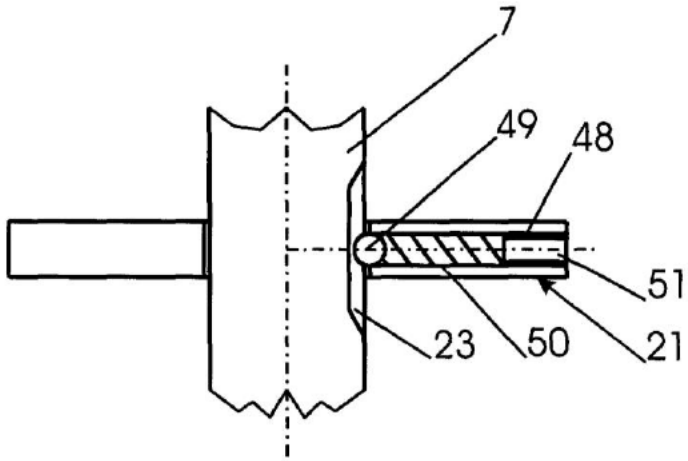

Fig. 5

TRANSLATION CERTIFICATION

Date: March 6, 2023

To whom it may concern:

This is to certify that the attached translation from German into English is an accurate representation of the documents received by this office.

The documents are designated as:

- DE19946732B4 (Schmutzler)
- DE19962177A1 (Gottlieb2)
- DE19856617A1 (Klugl2)
- DE19942816A1 (Klenk)

_Prince Williams _____, Project Manager, attests to the following:

"To the best of my knowledge, the aforementioned documents are a true, full and accurate translation of the specified documents. I affirm that the provided translation was produced under the ISO 9001:2015 certified quality management process and the agents responsible for the specified translations are qualified to translate and review documents for the above language pair."

_____

Signature of __Prince Williams___