UNITED STATES PATENT AND TRADEMARK OFFICE

BEFORE THE PATENT TRIAL AND APPEAL BOARD

ROBERT BOSCH LLC, and
MERCEDES-BENZ USA, LLC,
Petitioner

v.

WESTPORT FUEL SYSTEMS CANADA INC.,
Patent Owner

Inter Partes Review No. IPR2023-00292
Patent No. 6,298,829

DECLARATION OF DR. CHRISTOPHER ATKINSON

TABLE OF CONTENTS

Page

I. INTRODUCTION AND SCOPE OF WORK 1

II. PROFESSIONAL BACKGROUND 1

III. COMPENSATION 2

IV. LEGAL PRINCIPLES 2

V. PERSON OF ORDINARY SKILL IN THE ART 5

VI. CLAIM CONSTRUCTION 5

VII. FUEL INJECTORS 6

VIII. THE ’829 PATENT 11

IX. ART RELIED ON BY PETITIONERS 15

X. THE COMBINATION OF WIRBELEIT AND KLÜGL DOES NOT RENDER ANY CHALLENGED CLAIM UNPATENTABLE 49

XI. THE COMBINATION OF KLÜGL AND HAYES DOES NOT RENDER ANY CHALLENGED CLAIM UNPATENTABLE 61

XII. CONCLUSION 68

LIST OF DOCUMENTS CONSIDERED

Exhibit No.	Description
1001	U.S. Patent No. 6,298,829 (the ’829 Patent”)
1002	File History of the ’829 Patent
1003	Declaration of Dr. Matt Quinlan
1004	U.S. Patent No. 5,479,902 (“Wirbeleit”)
1005	DE 197 08 304 A1
1006	Translation of DE 197 08 304 A1 (“Klügl”)
1007	U.S. Patent No. 5,735,240 (“Ito”)
1008	U.S. Patent No. 6,295,969 (“Kato”)
1009	U.S. Patent No. 5,697,554 (“Auwaerter”)
1010	U.S. Patent No. 4,725,002 (“Trachte”)
1011	U.S. Patent No. 3,598,506 (“O’Neill”)
1012	U.S. Patent No. 4,684,067 (“Cotter”)
1013	EP 0 107 894 A2 (“Beck”)

1014	U.S. Patent No. 4,284,263 ("Newcomb")
1015	GB 2 318 390 A ("Roessler")
1016	Docket Entries, *Westport Fuel Sys. Can. Inc. v. Ford Motor Co.*, No. 2:21-cv-00453 (E.D. Tex.)
1017	Docket Entries, *Westport Fuel Sys. Can. Inc. v. Mercedes-Benz USA LLC*, No. 2:21-cv-00454 (E.D. Tex.)
1018	Docket Entries, *Westport Fuel Sys. Can. Inc. v. Nissan N. Am., Inc.*, No. 2:21-cv-00455 (E.D. Tex.)
1019	Docket Entries, *Westport Fuel Sys. Can. Inc. v. Gen. Motors LLC*, No. 2:21-cv-00456 (E.D. Tex.)
1020	Docket Entries, *Westport Fuel Sys. Can. Inc. v. FCA USA LLC d/b/a/ FCA Grp. US LLC*, No. 2:21-cv-00457 (E.D. Tex.)
1021	Docket Entries, *Robert Bosch LLC v. Westport Fuel Sys. Can. Inc.*, No. 1:22-cv-00370 (E.D. Va.)
1022	Plaintiff Westport Fuel Systems Canada Inc.'s Disclosure of Asserted Claims and Infringement Contentions, *Westport Fuel Sys. Can. Inc. v. Ford Motor Co.*, No. 2:21-cv-00453 (E.D. Tex.)
1023	U.S. Patent No. 6,148,842 ("Kappel")
1024	U.S. Patent No. 5,779,149 ("Hayes")
2001	Report of Dr. J. Matt Quinlan (Dec. 2, 2022)

2002	Deposition Transcript of Dr. J. Matt Quinlan (Jan. 12, 2023)
2003	CV of Dr. C. Atkinson
2004	Declaration of Dr. C. Atkinson
2005	DE 199 42 816 A1
2006	Translation of DE 199 42 816 A1 ("Klenk")
2007	DE 198 56 617 A1
2008	Translation of DE 198 56 617 A1 ("Klügl '617")
2009	DE 199 46 732 B4
2010	Translation of DE 199 46 732 B4 ("Schmultzer")
2011	DE 199 62 177 A1
2012	Translation of DE 199 62 177 A1 ("Gottlieb")
2013	U.S. Patent No. 6,513,487 ("Jorach")
2014	Bosch's Motion to Stay Pending *Inter Partes* Review
2015	Order Denying Bosch's Motion to Stay Pending *Inter Partes* Review

2016	GB 2 321 278 A (“Hoffman”)
2017	U.S. Patent No. 4,803,393 (“Takahashi”)
2018	U.S. Patent No. 5,031,841 (“Schäfer”)
2019	U.S. Patent No. 5,875,764 (“Kappel ’764”)
2020	U.S. Patent No. 6,062,533 (“Kappel ’533”)
2021	Bosch Declaratory Judgment Complaint
2023	Deposition Transcript of Dr. J. Matt Quinlan (March 1, 2024)
2024	Exhibit 2 from Second Dep.
2025	Deposition Transcript of Dr. J. Matt Quinlan (April 19, 2024)
2026	Declaration of Heike Holthaus
2027	German-English Automotive Engineering Dictionary
2028	Delmar’s Automotive Dictionary
2029	Lane’s Complete Dictionary of Automotive Terms
2030	Dictionary of Mechanical Engineering

2031	Westport Annual Report 2015
2032	IPR Dep. Exhibit 13
2033	Westport Fuel Systems Corporate Presentation March 2023
2034	Oct. 26, 2001 News Release, WFS369772
2035	Nov. 9, 2001 News Release, WFS369782
2036	Oct. 28, 2023 News Release, WFS370088
2037	Oct. 27, 2024 News Release, WFS370207
2038	Updated CV of Dr. Christopher Atkinson
2039	Westport's Technology Tutorial, *Case No. 2:23-cv-00038-JRG-RSP*
2040	IPR Dep. Exhibit 6

I. INTRODUCTION AND SCOPE OF WORK

1. My name is Dr. Christopher Atkinson. I am over the age of twenty-one (21) years and competent to make this Declaration.

2. I have been retained by Patent Owner to provide my opinions concerning U.S. Patent No. 6,298,829 ("the '829 Patent") and, in particular, to the challenges made to the '829 Patent in *inter partes* review No. IPR2023-00292.

II. PROFESSIONAL BACKGROUND

3. I have been working in the field of engineering for over 30 years. I received a Bachelor of Science degree in Chemical Engineering in 1983, a Master of Science degree in Mechanical Engineering in 1987 and a Doctor of Science in Mechanical Engineering in the Thermal Sciences in 1991. I have worked extensively in academia, including as the Director of the Center for Alternative Fuels, Engines and Emissions at West Virginia University, and founded two companies focused on internal combustion engines, fuels, and emission reductions. I have researched, modified, converted, and equipped fuel injected engines since 1991, including systems using gasoline, ethanol, methanol, diesel, biodiesel, compressed natural gas, and other fuels for over 30 years. I currently serve as a tenured Professor of Mechanical and Aerospace Engineering at Ohio State University. A primary focus throughout my career has been transportation and vehicle technologies focused on

reduction in greenhouse gases and improvements in efficiency, including internal combustion engine design, development, integration, control, calibration, and optimization. Please see my CV for further details. Ex. 2038.

III. COMPENSATION

4. I am being compensated in this matter at my standard hourly rate of $450/hr.

5. My compensation is not dependent on the contents of this Declaration, any testimony I may give, or any outcome of this matter.

IV. LEGAL PRINCIPLES

6. I am not an attorney and have not been asked to offer an opinion on the law. I have not researched the law that may relate to this proceeding. However, as an expert assisting the PTAB in analyzing the issues raised by the Petitioners, I understand that I am obliged to follow existing law. I have therefore been asked to apply the following legal principles to my analysis, and I have done so.

7. A patent claim is invalid as obvious if differences between the subject matter of the claim and the prior art are such that the subject matter of the claim as a whole would have been obvious at the time the invention was made to a person having ordinary skill in the art to which said subject matter pertains.

8. In determining whether a claimed invention is obvious, one should consider the scope and content of the prior art, the level of ordinary skill in the relevant art, the differences between the claimed invention and the prior art, and whether the claimed invention would have been obvious to one of ordinary skill in the art in light of those differences.

9. I understand that certain objective factors, sometimes known as "secondary considerations" must, if present, be taken into account in determining whether a claimed invention would have been obvious. Such objective indicia as commercial success, long felt but unsolved needs, and failures of others may often be the most probative and cogent evidence of non-obviousness. Such evidence may often establish that an invention appearing to have been obvious in light of the prior art was not obvious. The person of ordinary skill in the art is a hypothetical person who is presumed to be aware of all of the pertinent art at the relevant point in time. The person of ordinary skill is not an automaton, and may be able to fit together the teachings of multiple prior art references employing ordinary creativity and the common sense that familiar items may have obvious uses beyond their primary purposes.

10. In establishing obviousness, one must avoid the temptation to read into the prior art the teachings of the invention at issue and guard against slipping into

the use of hindsight. The prior art itself, and not the applicant's achievement, must establish the obviousness of the combination. That is, a claim of the challenged patent cannot serve as a motivation to combine prior art references.

11. I have not been asked to opine on, and have not analyzed, the priority date for any of the claims at issue in this petition for *inter partes* review ("IPR"). For the purposes of my analysis, I have been asked to assume the references relied upon by the Petitioners in this IPR meet the definition of prior art. I understand that even if all aspects of the claimed invention were individually known in the art that is not sufficient to establish a *prima facie* case of obviousness without some objective reason to combine the teachings of the references as arranged in the claim under consideration. On this point, I understand that mere statements to the effect that a combination would have been obvious are not sufficient in the absence of articulated reasoning with rational underpinning to support the conclusion of obviousness. I understand that a mere combination of references disclosing individual elements itself does not satisfy the burden of proving invalidity by a preponderance of the evidence.

12. If a proposed modification to a reference would render the prior art unsatisfactory for the intended purpose, or if the prior art teaches away from the

proposed modification, then there is no suggestion or motivation to make the proposed modification.

13. If a proposed modification or combination of prior art references would change the principle of operation of the prior art being modified, then the teachings of the references are not sufficient to render the claims prima facie obvious.

V. PERSON OF ORDINARY SKILL IN THE ART

14. A person of ordinary skill in the art ("POSITA") of the '829 Patent as of the date of invention would have at least have had a degree in mechanical engineering or a similar discipline along with 2 years of professional experience working with fuel injectors or fuel injection systems for internal combustion engines.

VI. CLAIM CONSTRUCTION

15. I have been advised that for an IPR, the terms in the claims are construed based on their ordinary and customary meaning to a POSITA at the time of the invention unless the term has been clearly and unambiguously given a special definition in the specification. I understand that items of intrinsic evidence, including the specification, supplemented by the file history of the patent, are the best sources for understanding a term used differently from its ordinary and customary meaning. Extrinsic evidence, such as dictionaries and expert testimony, are relied on only when the ordinary and customary meaning and the intrinsic evidence are insufficient.

16. In my opinion, the terms of the ’829 Patent do not require any construction as their plain and ordinary meaning is sufficient to fully understand the scope of the claims.

VII. FUEL INJECTORS

17. Internal combustion engines in most cases utilize the combustion of an air-fuel mixture in a cylinder(s) to raise the temperature and pressure of a working fluid (such as a mixture of air, products of combustion, and exhaust gases) to act on a piston(s) within that cylinder(s) to produce useful engine output work.

18. The introduction of a combustible fuel into a modern engine is ordinarily effected by the use of a “fuel injector” that introduces the fuel (such as a liquid or gaseous hydrocarbon) into an oxidant-containing gas (such as fresh air, or the mixture of fresh air, products of combustion, and exhaust gases, sometimes known as the cylinder “charge”).

19. The fuel injector serves to facilitate the introduction of the fuel into the cylinder charge in a variable quantity that varies with respect to a number of parameters including the amount of oxidant in the cylinder charge (the oxidant normally being the oxygen resident in the fresh intake air), so that the resultant air and fuel combustion process can be regulated and controlled with respect to the desired engine performance, fuel efficiency and emissions production.

20. The fuel(s) introduced into an engine may be in the liquid or gaseous phases, and the combustion process may be initiated through the timely provision of a high energy electrical spark (as in the use of a spark plug(s) for spark-ignition engines) or through the compression of the intake charge and fuel mixture, for example as a piston moves in its cylinder (as in a compression-ignition engine).

21. In recent decades, in order to reduce deleterious combustion exhaust gas emissions, increasing attention has been paid by engine design, engine performance and engine calibration engineers, to the mixture preparation, ignition, and combustion processes that occur within engines.

22. Increasingly stringent governmental regulations over the past several decades pertaining to vehicle tailpipe and engine exhaust emissions, including emissions of oxides of nitrogen, carbon monoxide, unburnt hydrocarbons, and particulate matter, have required engine developers and manufacturers to constantly improve the design and manufacture of the internal combustion engine and its constituent componentry. Fuel efficiency considerations, increasing fuel costs, and vehicle owners' desire for improved vehicle performance have similarly resulted in continual pressure on engine engineers to improve engine efficiency, performance, and power output while ensuring increased durability and reduced maintenance requirements and operating costs. (Ex. 2039, 6.)

23. To meet these demands, the internal combustion engine has had to evolve in a variety of ways, while balancing concerns such as fuel economy, emissions, efficiency, power, decreasing size, and precision performance (i.e., driveability and improved responsiveness).

24. This led to research and design efforts around the development of higher performance fuel injectors, including, for example, injectors that were capable of operating at much higher pressures and providing more efficient or effective fuel spray patterns.

25. In addition, use in a direct fuel injection system—where fuel is not mixed with air before introduction into the combustion cylinder—required integration of fuel injectors in, on, and around high-temperature surfaces and zones within the engine, thereby leading to the possibility of significant temperature or thermal gradients across a single injector.

26. Fuel injectors are intricate devices that include a variety of components that must be manufactured with very tight tolerances of their constituent parts to reduce the possibility of internal or external fluid leakage, including to prevent fuel leakage into the cylinder(s) at inappropriate times.

27. At the time of the invention, not only were machining tolerances for the constituent parts a concern,but there was a need for higher performance fuel injectors

that could deliver precise actuation in terms of both the duration of actuation (for example, how long a fuel metering valve was held open) and position of actuation (for example, how much a valve needle is lifted). Such considerations have continued to grow in importance as performance, emissions, and fuel efficiency demands have increased.

28. The time scales of actuation or operation of a fuel injector depend on a number of variables including the engine rotational speed. At characteristic engine speeds, a fuel injector might open and close 50 times per second or more, with an injection valve opening time of less than 1 millisecond and opening duration of less than 10 milliseconds. Dimensional tolerances for the internal components of modern injectors can be measured in single digit microns, or thousandths of a millimeter. Withthe short time scales of operation (opening, holding open, and closing) required of an injector, the reproducibility and accuracy of the metered quantity of fuel is paramount to achieving the required engine-out emissions levels to allow the engine and/or vehicle to meet prevailing exhaust gas emissions regulations. The tight clearances and tolerances required in a modern injector, such as those described in the ’829 Patent, coupled with the requirement that the injector last for millions of operating cycles without maintenance, modification, or repair make self-

compensating devices, elements, and features within the injector of critical importance.

29. At the time of the invention of the ’829 Patent, designers would have been attempting to design responsive and fast acting fuel injectors that could accurately and precisely meter fuel over the full expected life of the injector. These desired attributes would lead designers to minimize the total number of internal components in order to lower manufacturing costs and minimize tolerance (e.g., manufacturing tolerance “stack up”) and thermal expansion and wear issues. Designers also would look to minimize the number of movable and deformable parts because their susceptibility to wear and friction increased the risk of failure over time. Designers also would look for designs that are easier to calibrate, including the ability for self-calibration of the fuel injection quantity, timing, and pressure.

30. Maintaining injector fuel metering accuracy and precision, and the ability to operate and meter fuel reproducibly in the presence of high temperatures and significant thermal gradients, with significant reliability and longevity were and are critical elements in fuel injector design and operation. Directly injecting fuel at high pressure into the combustion chamber of an internal combustion engine during the combustion cycle provides advantages in both engine performance and reducing emissions but causes engineering challenges because injecting fuel rapidly

and at high pressure requires fast-actuating fuel injectors that can reliably perform for millions of operating cycles.

VIII. THE '829 PATENT

31. I reviewed the '829 Patent and its file history in preparation for this Declaration.

32. As explained in the '829 Patent, the inventors sought to address many of the above-discussed challenges. The background section of the specification describes the need for a rapid, high-pressure fuel injector capable of providing duration control (how long a valve is open) and position control (how much a valve sealing mechanism is interrupted).

33. One of the ways that the inventors addressed these challenges was to develop a fuel injector having, *inter alia*, a hydraulic link assembly.

34. Their hydraulic link assembly includes a passive hydraulic link having a hydraulic fluid layer through which opening and closing forces are transmitted. The hydraulic fluid acts substantially as a solid, with a substantially constant thickness, while the actuator assembly is activated. The hydraulic link adjusts between actuation events to maintain desired valve needle lift characteristics in response to changes in the dimensional relationship between components of the injection valve.

35. As described in the patent's specification, "the hydraulic link assembly accounts for variations in component dimensions arising from the permitted tolerances in the manufacturing processes and the injection valve assembly methods. Therefore, the hydraulic link assembly reduces manufacturing costs by allowing the injection valve components to be manufactured to less exacting tolerances. In addition, during operation, the hydraulic link assembly auto-adjusts itself between injection events to account for changes in the dimensional relationship between injection valve components that may be caused, for example, by component wear or differential thermal expansion or contraction." Ex. 1001, 12:15–26.

36. Referring to Fig. 2 from the '829 Patent as shown below, valve needle 114 is shaded in blue, the connected hydraulic cylinder 160 and cylinder cap 162 are shaded in green, the actuator 130 is shaded in yellow, the needle spring 116 is shaded in purple, and the hydraulic fluid 164a/b is shaded in red.

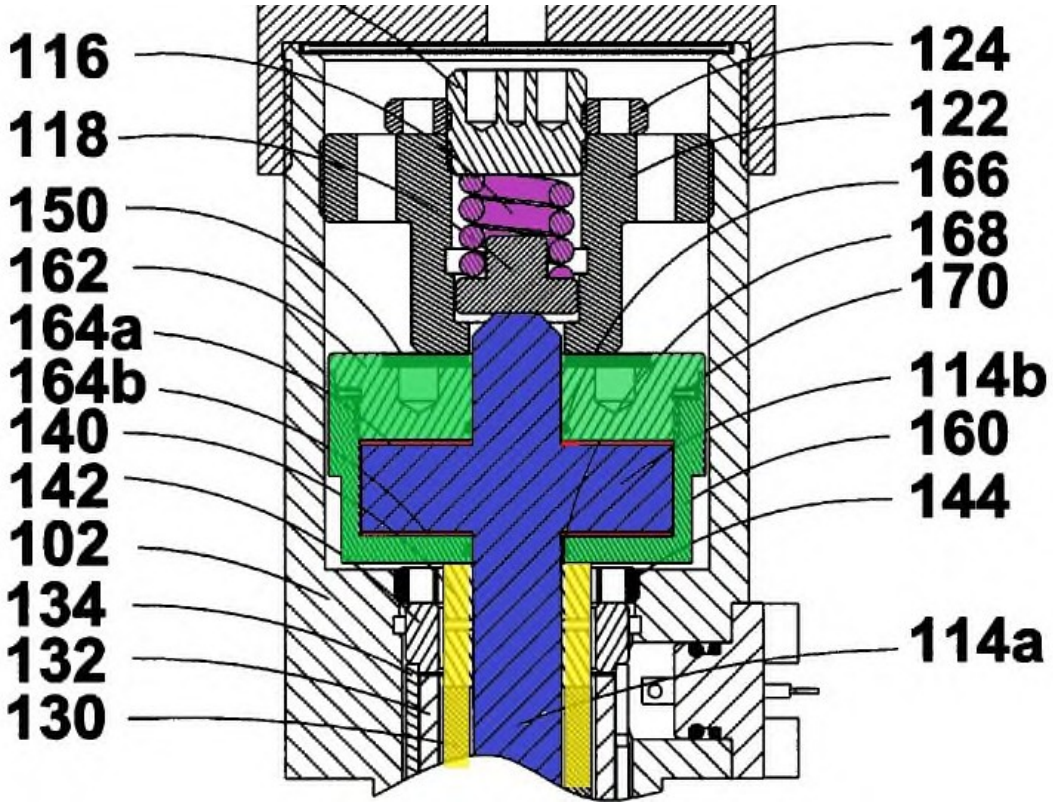

37. The valve needle 114 includes a hydraulic piston 114b. The outside diameter of hydraulic piston 114b fits closely within the inside diameter of the hydraulic cylinder 160, allowing longitudinal movement of the hydraulic piston 114b relative to the hydraulic cylinder and creating a small diametrical clearance gap. A viscous hydraulic fluid is provided in the clearance gap between the hydraulic piston 114b and the hydraulic cylinder 160. The hydraulic fluid provides a layer between the cylinder cap 162 and the hydraulic piston 114b. The hydraulic fluid also provides a layer between the base of the hydraulic cylinder 160 and the planar surface of the hydraulic piston 114b. Ex. 1001, 10:63–12:26.

38. The needle spring 116 provides a closing force that pushes the valve needle 114 against a valve seat 112 in the closed position. Ex. 1001, 9:16–19.

39. To open the valve, an electric voltage is applied to the actuator 130, which longitudinally expands the actuator and applies an opening force to the base of the cylinder 160. The opening force is transmitted from the base of the cylinder 160 through the thickness of hydraulic fluid 164b to the valve needle 114, moving the valve needle upward (in the orientation of this exemplary figure). The duration of the actuation is very short, typically less than 250 microseconds. Ex. 1001, 12:38–60.

40. The actuator may be magnetostrictive or piezoelectric in nature. Ex. 1001, 9:35–44.

41. Because of the tight diametrical fit between the hydraulic piston 114b and the hydraulic cylinder 160, the flow of hydraulic fluid 164b through the clearance gap is insignificant during the time span of the brief actuation events. The viscous hydraulic fluid acts as an incompressible solid during actuation, providing a substantially constant thickness. Thus, the patent teaches a POSITA that the actuator's instantaneous actuation force will be transmitted through the hydraulic fluid thickness in nearly the same way that such a force would betransmitted through a solid material. Ex. 1001, 11:11–40.

42. When the electric voltage is removed from the actuator 130, it will longitudinally contract. With the actuation force removed, needle spring 116 expands longitudinally and applies a closing force. The hydraulic fluid 164 transmits the closing force to move the valve needle towards the valve seat. Ex. 1001, 13:32–67.

43. When the fuel injector 100 is closed (during typical engine operation the fuel injector 100 is closed normally over 90% of the time), the hydraulic fluid can move within the small diametrical clearance gap. This allows the thickness of the hydraulic fluid layers 164a and 164b to change to accommodate dimensional variations due to long-term mechanical component wear or shorter-term engine operating thermal gradients and temperature effects. Ex. 1001, 11:41–57.

IX. ART RELIED ON BY PETITIONERS

A. U.S. Patent No. 5,479,902 ("Wirbeleit")

44. Wirbeleit states that its "invention relates to a fuel injection system for a Diesel engine which includes a high pressure fuel pump supplying fuel under pressure to a common-rail fuel supply conduit which in communication with valve-controlled injectors fop [sic] the injection of fuel under the control of an electronic control unit." Ex. 1004, 1:7–12.

45. Wirbeleit further explains that "the object of the present invention [is] to provide a fuel injection system of the type referred to above, wherein the injection

time can be selected over the whole engine performance range for each individual load point independently of the level of the fuel injection pressure." Ex. 1004, 1:36–41 (alteration added).

46. Wirbeleit describes a fuel injector with slot-shaped orifices, the opening of which can be controlled by a control needle itself controlled by a needle actuator. Ex. 1004, 3:29–4:2.

47. With reference to the portion of the figure of Wirbeleit shown below, Wirbeleit's injector includes an injector orifice control needle 5 that moves downward and away from valve seat 8 to allow fuel to flow from chamber 13 through grooves 18 and oblong openings 18a. Ex. 1004, 2:31–54.

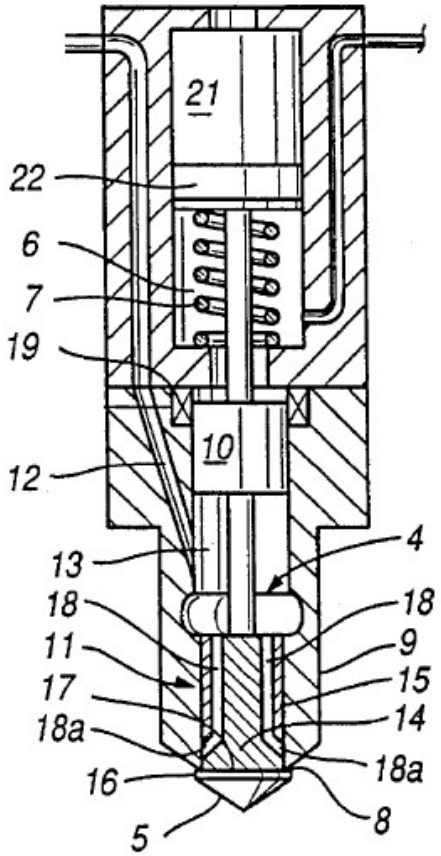

48. The injector is opened by energizing actuator 21, which acts on the control needle 5 by way of a "hydraulic transmission element 22". The hydraulic transmission element is illustrated as an empty box without any detail in the patent. Wirbeleit also says an "elastomer" or "mechanical force transmission" could be utilized in place of the hydraulic transmission element. Ex. 1004, 2:60–67.

49. Wirbeleit does not teach, and it is not possible to discern from the figure, the internal structure of the hydraulic transmission element 22. Any number of hydraulic transmission methods or systems could perform as the "hydraulic transmission element" of Wirbeleit to allow the needle actuator to operate the orifice

control needle. The lack of detail presented regarding the "hydraulic transmission element," and the option of incorporating alternative non-hydraulic transmission element options, reflects that the "hydraulic transmission element" disclosed is not critical to the operation of the described design in conveying the movement of the actuator to operate the orifice control needle. Further, any "hydraulic transmission element" should not negate or interfere with the operation of the disclosed electronic control unit 20.

50. Return spring 7 biases the control needle 5 upward into contact with valve seat 8 to close the oblong openings 18a and stop the flow of fluid. The actuator 21 will longitudinally contract when its period of energization ends, returning the actuator 21 and the hydraulic transmission element 22 to their initial positions and configurations. Ex. 1004, 2:31–39; 3:7–11.

51. Wirbeleit's fuel injector operates using a needle position sensor 19, and accompanying electronic control unit 20, to continually monitor the position of the control needle 5 and then to vary the energization of the actuator 21 to adjust the position of the needle that controls the opening of the orifices. Ex. 1004, 2:56–59.

52. Wirbeleit's fuel injector relies on electrical or electronic means to compensate for variations in tolerances caused by thermal gradients, thermal expansion or component wear or lack of maintenance using electronic control unit

20. This fuel injector does not rely on hydraulic means of compensation to address variability, nor does it need to do so in order to achieve its stated purpose of making adjustments based on engine operating parameters. Ex. 1004, 2:4–12, 2:56–59, 3:1–7.

B. Petitioners' Translation Of German Patent Application DE 197 08 304 A1 ("Klügl") (Ex. 1006)

53. The translated version of Klügl submitted as Exhibit 1006 states that its "invention relates to a device for transmitting a movement according to the preamble of claim 1 and injectors with a device for transmitting a movement according to the preamble of claims 6 and 7." Ex. 1006, 1:3–6.

54. The preamble of claim 1 in the translated version of Klügl submitted as Exhibit 1006 is: "Device for transmitting a movement comprising a pressure chamber (5) which is at least partially filled with a transmission medium and which is at least partially delimited by a first flexible element (6), with a compensation chamber (7) connected via a connection (10) is connected to the pressure chamber (5), the connection (10) and the transmission medium being design in such a way that there are hardly any short-term pressure differences between the pressure in the pressure chamber (5) and the pressure in the compensation chamber (7) and long-term pressure differences almost be (sic) completely compensated, **characterized in that**". Ex. 1006, 7:65–8:8 (emphasis in original).

55. The preamble of claim 6 in the translated version of Klügl submitted as Exhibit 1006 is: "Injection valve with an actuator (1) and a control element (3), which are operatively connected to one another by a transmission module (2), with the following features:". Ex. 1006, 8:40–43.

56. The preamble of claim 7 in the translated version of Klügl submitted as Exhibit 1006 is: "Injection valve with an actuator (1) and a control element (3), which are operatively connected to one another by a transmission module (2), with the following features:". Ex. 1006, 9:2–5.

57. The translated version of Klügl submitted as Exhibit 1006 further explains that "[a] power transmission device is used, for example, in automotive engineering to transmit the movement of a piezoelectric actuator in an injection valve to a control element, the control element opening a servo valve, for example, which in turn controls the opening and closing of an injection valve." Ex. 1006, 1:7–12.

58. The translated version of Klügl submitted as Exhibit 1006 states that "[t]he object of the invention is to provide a particularly compact and easy-to-assemble device for transmitting a movement of an actuator. The object of the invention is achieved by the features of claim 1, by the features of claim 6 and by the features of claim 7." Ex. 1006, 1:20–25.

59. A POSITA would understand that claim 1 covers the device depicted in Fig. 2, at least because it claims means 20, 21, and 22, which appear only in Fig. 2. Ex. 1006, 8:10–15. Accordingly, a POSITA would not understand claim 1 to cover Figs. 1 or 3.

60. A POSITA would understand that claim 6 covers the devices depicted in Figs. 1 and 2, at least because the claim requires a "movably arranged" "transmission module (2)" and movement of the actuator (1) that "is at least partially transmitted to the control element (3) via a movement of the transmission module (2)." Ex. 1006, 8:61–68. Accordingly, a POSITA would not understand claim 6 to cover Fig. 3.

61. A POSITA would understand that claim 7 covers the device depicted in Fig. 3, at least because the claim requires a "fixed" transmission module (2) with "a second pressure chamber (28) delimited by a second flexible element (26)" with a connecting line (25) between the first and second pressure chambers (5) and (28). Ex. 1006, 9:18–21, 26–27. Accordingly, a POSITA would not understand claim 7 to cover Figs. 1 or 2.

62. A POSITA also would understand that the reference to "control element (3)" in the claims is a reference to "drive piston 3" shown on the figures and discussed in the specification.

63. With respect to annotated Fig. 1 below derived from the translated version of Klügl submitted as Exhibit 1006, the system of Klügl includes an actuator 1 (green) that is connected to a transmission module 2 that includes a pressure chamber 5 separated from a compensation chamber 7 by a connecting bore 10 that is within guide sleeve 11 (blue). Ex. 1006, 1:47–2:21. The pressure chamber 5 and compensating chamber 7 are preferably completely filled with a transmission medium (e.g., a hydraulic fluid) (red). Ex. 1006, 1:68–2:4. The fluid is pressurized by spring plate 8 forming the compensation chamber 7 and contained by a first membrane 6 that forms the pressure chamber 5. Ex. 1006, 1:60–68; 2:4–10. A POSITA would define diaphragm by its plain and ordinary meaning in the art, which would be a thin, flexible sheet of material. Ex. 2028 (Delmar's Automotive dictionary defines "diaphragm" as "[t]he flexible membrane found in a temperature- or pressure-control device that seals in an inert fluid from the atmosphere while allowing a mechanical movement."); Ex. 2029 (Lane's Complete Dictionary of Automotive Terms defines "diaphragm" as "a thin sheet of flexible material, usually circular, to divide compartments and form part of the operating mechanism, *e.g.* in a fuel pump or some valves."); Ex. 2030 (Dictionary of Mechanical Engineering defines "diaphragm" as "[a] flexible disc or membrane which deflects under a change of the differential fluid pressure across it.").). A POSITA at the time more

commonly would have referred to the membrane as a diaphragm, to emphasize the property of impermeability which would be important in a fluid filled application.

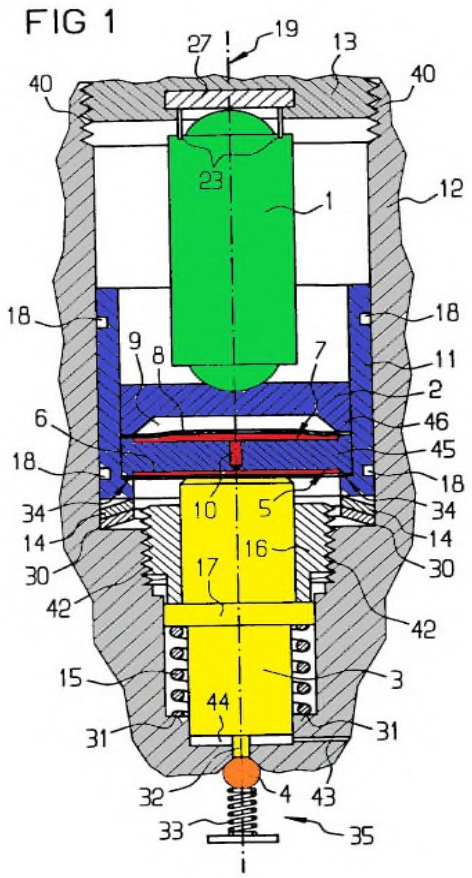

64. A drive piston 3 (yellow) has an upper end that is associated with the first flexible membrane 6 and a check ring 17 (yellow) that is biased by spring 15 against a lower stop 16. Ex. 1006, 2:35–49. The lower end of the drive piston 3 "merges into a control needle 32" (yellow) that extends "through relief chamber 44 to a valve seat 35 of a servo valve." Ex. 1006, 2:50–52.

65. A ball 4 (orange) is provided as the closing element. Ex. 1006, 2:54. Ball 4 is "pressed against the valve seat by valve spring 33" to close the servo valve. Ex. 1006, 2:54–55. Ball 4 is an independent spherical component (i.e., it is a separate piece from control needle 32 and valve spring 33) that is ordinarily pushed against the seat by the valve spring 33 to form a fluid seal. Ex. 1006, 2:51–55. It is only the occasional action of the control needle 32 pressing against the ball 4 from within the device that unseats the ball 4 from its valve seat and permits the flow of fluid from the outside of the device into relief chamber 44. Ex. 1006, 5:65–67.

66. The translated version of Klügl submitted as Exhibit 1006 describes the "automatic adjustment" of the transmission module 2. "If the piezoelectric actuator **1** shortens in the rest position without being actuated due to thermal influences or signs of aging in relation to the housing **12**, the spring plate **8** pushes the transmission medium from the compensation chamber **7** via the throttle **10** into the pressure chamber **5**, so that the first membrane **6** is moved in the direction of the drive piston **3** and, as a result, the drive piston **3** bears against the first membrane **6** despite the shortening of the piezoelectric actuator **1**." Ex. 1006, 3:63–4:3. In such a circumstance, a POSITA would understand that the first membrane 6 can only move in the direction of drive piston 3 if it deforms or bows downwards in the orientation of Fig. 1.

67. The translated version of Klügl submitted as Exhibit 1006 expressly teaches that membrane 6 is flexible. *E.g.*, Ex. 1006, 7:45–46; 7:65–9:30. Even if it did not, a POSITA would know membranes are flexible and pliable elements that will deform when subjected to the significant forces exerted within an injector at the typical actuation rates of the fuel injection process. Even a small deflection or deformation of the pliable, flexible membrane will be critical as the lift commonly generated in these applications is very small, usually less than 100 microns (about the thickness of a piece of paper). A POSITA also would understand that a membrane will not have different properties during actuation and while at rest (e.g., the membrane will be pliable and flexible in both circumstances).

68. Despite discussing "automatic adjustment," a POSITA would understand that Klügl has a flaw in its design that prevents it from maintaining a desired valve needle lift in response to changes in the dimensional relationship of components within the valve. As discussed, annotated Fig. 1 below has a check ring 17 (yellow) that will be pressed upward by spring 15 (green) against lower stop 16 (red). Ex. 1006, 2:35–49. As the translated version of Klügl submitted as Exhibit 1006 explains: "**[t]he spring 15**, which is designed as a cylindrical spring and encloses the drive piston 3 in the lower section, is clamped between a stop surface 31 and the check ring 17. This **presses the check ring 17 against the lower stop**

16. This way, the lower stop 16 specifies the rest position of drive piston 3." Ex. 1006, 2:44–49 (emphasis added). In other words, as shown in the annotated Fig. 1 below, when at rest, the distance A from the lower stop 16 to the end of the valve needle 32 is fixed and any "automatic adjustment" provided by the flexible membrane of Klügl's transmission module will not adjust distance A, which is the critical distance in Klügl's design for insuring desired valve needle lift.

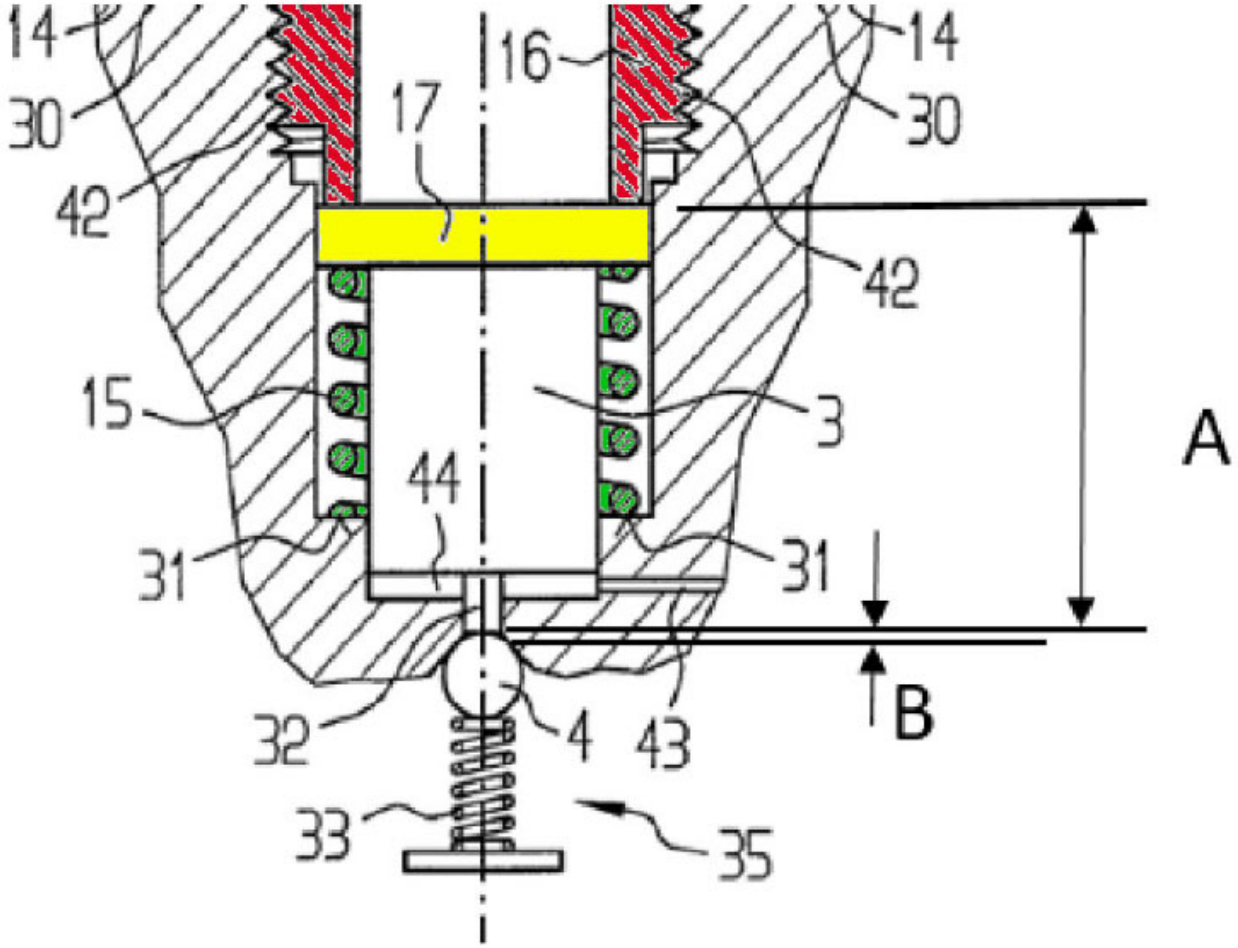

69. Ball 4 is illustrated as being in direct contact with the valve needle 32 but, because the upward movement of the ball is limited by its contact with the housing, thermal expansion or wear can create a gap B between the end of the valve needle 32 and ball 4. If gap B exists, then the ultimate lift of ball 4 away from the housing will be decreased and Klügl's design will not be able to maintain a desired needle lift. Consequently, its ability to regulate the flow of high-pressure fuel would be severely compromised.

70. Just as thermal expansion or wear may create a gap B, those same effects may operate in the other direction and cause the distance A to extend farther toward the contact between ball 4 and housing 12. This downward movement could cause ball 4 to move away from its seat, which would cause leakage between ball 4 and housing 12. Consequently, its ability to regulate the flow of high-pressure fuel would be severely compromised.

71. The translated version of Klügl submitted as Exhibit 1006 explains that "Fig. 1 shows a device for power transmission without stroke translation." Ex. 1006, 1:41–42. It further explains that "Fig. 3 shows a device for power transmission with stroke translation." Ex. 1006, 1:45–46. "The injection valve shown in Fig. 3 differs from the injection valves of Fig. 2 and 1 in the type of power transmission from the piezoelectric actuator 1 to the drive piston 3." Ex. 1006, 4:52–55. A POSITA would

understand that the distinction being drawn between "with" and "without" would be the consequence of differences in the physical components and principles of operation between the two figures.

72. The table below summarizes the disclosed similarities and differences between the physical components of Figs. 1 and 3 in the translated version of Klügl submitted as Exhibit 1006, as disclosed in the figures themselves and throughout the specification and claims:

Fig. 1	Fig. 3	Same or Different?
piezoelectric actuator 1 Abstract; 1:47–56; 2:11–34; 3:1–29; 3:39–4:10; 7:34–54; 8:40–43; 8:56–57; 8:61–68	piezoelectric actuator 1 4:50–63; 5:39–43; 5:51–55; 6:6–16; 6:24–39; 7:9–28; 7:34–54; 9:1–5; 9:22–33; 9:37–49	Same
transmission module 2 1:47–66; 2:11–34; 8:40–49; 8:56–68; 9:34–49	transmission module 2 4:50–66; 5:9–13; 5:39–57; 6:29–33; 7:21–23; 7:34–54; 9:1–11; 9:18–21; 9:26–33; 9:37–49	Different
drive piston 3 / control element 3 1:7–12; 2:35–53; 3:14–29; 4:11–24; 8:40–43; 8:58–68; 9:37–49	drive piston 3 / control element 3 1:7–12; 4:50–5:8; 5:44–50; 5:57–67; 6:16–24; 6:48–58; 7:9–20; 7:34–54; 9:1–4; 9:24–33; 9:37–49	Same

servo valve / ball / closing element 4 2:54–57; 3:11–13; 3:30–49; 9:37–49	servo valve / closing element 4 5:44–67; 6:6–12; 6:21–28; 6:42–47; 6:21–23; 9:37–49	Same
first pressure chamber 5 1:60–2:4; 3:23–29; 3:56–62; 4:25–31; 8:44–55	first pressure chamber 5 5:9–33; 5:55–6:6; 6:16–28; 6:34–44; 6:51–7:8; 9:6–21	Same
first flexible membrane 6 1:60–62; 2:23–25; 2:35–36; 3:14–29; 4:4–10; 8:44–46; 8:58–60	first flexible membrane 6 5:9–18; 5:44–50; 5:55–67; 6:13–20; 6:39–58; 7:1–31; 9:6–8; 9:24–33	Same
compensation chamber 7 1:64–2:10; 3:56–62; 4:25–31; 8:47–55	compensation chamber 7 5:24–34; 6:1–12; 6:21–28; 6:39–58; 9:9–17	Same purpose, but different shape
pre-stressed spring plate 8 1:67–2:7; 2:22–34; 3:63–4:10	spring plate 8 5:31–38; 6:24–28; 6:39–47	Same
recess 9 2:28–34	recess 9 2:28–34	Same purpose, but different shape

connecting bore / connection 10 1:60–65; 2:20–25; 8:47–55	connecting bore / connection 10 5:31–38; 6:1–6; 6:51–58; 9:9–17	Same purpose, but different dimensions
guide sleeve 11 2:11–21; 3:14–19; 3:39–42	N/A	Different
housing 12 1:47–60; 2:11–21; 2:35–39; 2:50–53; 3:63–4:3; 8:61–68; 9:34–36	housing 12 4:50–5:8; 5:39–43; 9:26–33	Same
upper stop 13 1:47–60; 3:1–4; 3:14–19; 9:37–49	upper stop 13 4:50–66; 5:39–43; 7:34–54; 9:37–49	Same
disk spring 14 2:11–21; 3:16–19; 3:23–29; 3:39–42; 9:34–36	disk spring 14 4:50–66; 5:39–43; 5:51–55; 6:13–20	Same, but located differently
spring 15 2:35–49; 3:16–22; 3:30–33; 3:42–49	spring 15 5:1–8; 5:51–67; 6:13–20; 6:39–47	Same
lower stop 16 2:35–49; 3:1–4; 3:19–22	lower stop 16 4:63–5:8; 5:39–47; 5:55–57	Different

check ring 17 2:41–49	check ring 17 5:1–8	Same
sealing rings 18 7:21–23	sealing rings 18 7:21–23	Same, but located differently
axis of symmetry 19 7:32–33	axis of symmetry 19 7:32–33	Same
control lines 23 1:51–56	control lines 23 5:51–55	Same
voids under portions of flexible membrane 6 3:14–29; 3:63–4:10; 8:44–46; 8:58–60	voids 24 under portions of flexible membrane 6 5:44–50; 5:55–67; 6:39–58; 7:24–31; 9:6–8; 9:24–33	Same purpose, but different shape
N/A	lines 25 5:9–27; 5:57–61; 6:16–20; 6:51–7:8; 9:18–21	Different
N/A	third membrane 26 5:9–13; 5:44–45; 5:55–61; 6:34–39; 6:48–51; 7:1–20	Different
control means 27 1:51–56; 7:39–41	control means 27 5:51–55; 7:39–41	Same

N/A	second pressure chamber 28 5:9–30; 5:57–61; 6:16–20; 6:34–39; 6:48–7:8; 9:18–21	Different
N/A	die 29 4:50–66; 5:9–13; 5:39–45; 5:51–61; 6:13–16; 6:29–39; 6:48–58; 7:9–12	Different
ring-shaped peripheral first stop 30 2:15–21	ring-shaped stop under disk spring 14 2:15–21	Same, but located differently
stop surface 31 2:44–49	stop surface 31 2:44–49	Same
control needle 32 2:50–53; 3:30–32	control needle 32 5:51–67	Same
valve spring 33 2:54–57; 3:42–45	valve spring 33 5:45–50; 6:21–24	Same
annular bearing surface 34 2:15–18	N/A	Different
valve seat 35 2:50–53; 3:11–13; 3:30–33; 3:42–45	valve seat 5:45–50; 6:21–24; 6:42–47	Same

N/A	ring-shaped support surface 36 5:45–50	Different
circular piston surface 2:15–16	circular piston surface 37 5:45–50; 7:9–14	Same
N/A	circular plunger surface 38 5:55–61; 7:9–12	Different
screw thread 40 1:57–60; 9:37–49	screw thread 40 1:57–60; 9:37–49	Same
screw connection 42 2:35–39	screw connection 42 5:1–4	Same
relief line 43 2:50–53; 3:45–49	relief line 43 2:50–53; 3:45–49	Same
relief chamber 44 2:50–53; 3:33–38	relief chamber 44 2:50–53; 3:33–38	Same
base plate 45 2:22–34	base plate 2:22–34	Same purpose, but different shape
cover plate 46 2:22–34; 4:35–40	cover plate 2:22–34; 4:35–40	Same purpose, but different shape

transmission medium 1:68–2:10; 3:23–29; 3:56–4:31; 8:44–55	transmission medium 5:9–30; 5:55–61; 6:1–28; 6:34–7:8; 7:24–31; 9:6–17; 9:26–33	Same

73. Figs. 1 and 3 use some of the same or similar physical components, e.g., piezoelectric actuators 1, drive pistons 3, transmission medium, and first flexible membrane 6, but also have key differences. As can be seen by even a simple visual comparison, the primary physical differences between Figs. 1 and 3 are in the respective transmission module elements (both labeled 2). A POSITA would understand that these physical differences are the result of and allow for different principles of power transmission between Figs. 1 and 3. As the translated version of Klügl submitted as Exhibit 1006 explains, "[t]he injection valve shown in Fig. 3 ***differs*** from the injection valves of Fig. 2 and 1 ***in the type of power transmission from the piezoelectric actuator 1 to the drive piston 3***." Ex. 1006, 4:52–55 (emphasis added). Notably, the translated version of Klügl submitted as Exhibit 1006 explains the difference between Figs. 1 and 3 as one of "type," not amount.

74. In Fig. 1, when piezoelectric actuator 1 is controlled, "the piezoelectric actuator 1 presses the entire transmission module 2 against the spring force of the disk spring 14 in the direction of the drive piston 3, so that pressure is exerted on the drive piston 3 via the first membrane 6 and the transmission medium located in the

pressure chamber is exercised." Ex. 1006, 3:23–29. A POSITA would understand that this power transmission is all in the longitudinal direction, and there is no redirection or translation of the force exerted by piezoelectric actuator 1 as it is conveyed through the movement of the ***movable*** transmission module 2 into drive piston 3. The demonstrative of a portion of Fig. 1 below shows the way that power transmission occurs in that embodiment with red arrows.

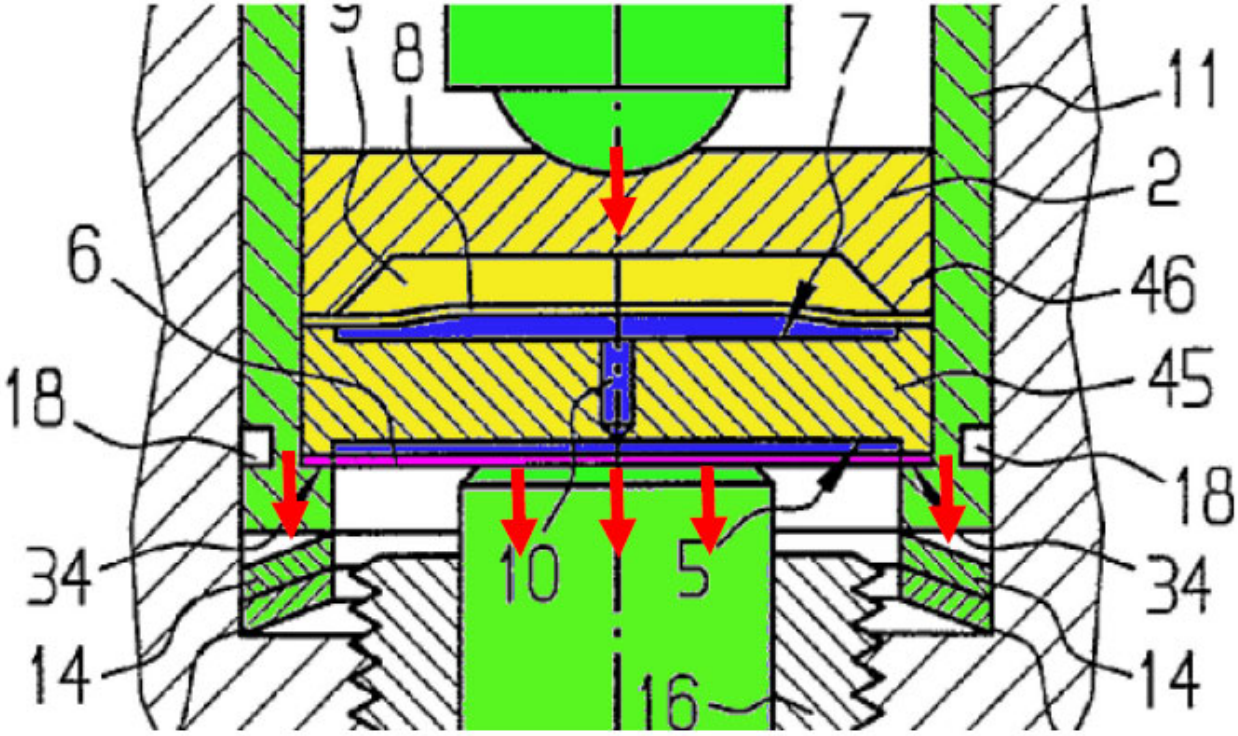

75. In Fig. 3, when piezoelectric actuator 1 is controlled, "the piezoelectric actuator 1 lengthens, so that as a result the die 29 is deflected against the spring force of the disk spring 14 in the direction of the transmission module 2. However, the transmission module 2 is fixed in position by the lower stop 16 preventing it from

following the longitudinal movement of the die 29. As a result, the third membrane 26 is pushed downwards by the die 29 with the circular plunger surface 38 causing the transmission medium located in the second pressure chamber 28 to be pushed into the pressure chamber 5 via the lines 25. This deflects first membrane 6 in the direction of the drive piston 3 and the drive piston 3 is thus moved against the spring force of the spring 15 in the direction of the closing element 4." Ex. 1006, 5:52–65. A POSITA would understand that this power transmission starts with a force exerted in the downwards longitudinal direction, but then this force has to be redirected or translated through the fixed transmission module 2. This redirection or translation starts with power transmission moving laterally outward toward lines 25, then moves down the vertical portion of lines 25 and diagonally inward and downward through the bottom portions of lines 25 to pressure chamber 5. This transmission of force causes a deflection or bowing of flexible membrane 6 in the downward longitudinal direction. Only after redirection or translation has been accomplished is the force then redirected or translated back into the longitudinal direction when flexible membrane 6 deflects in the direction of drive piston 3. There is no way that the power transmission could get from actuator 1 to drive piston 3 if it were not redirected or translated because of the fixed nature of transmission module 2 in Fig. 3. The

demonstrative of a portion of Fig. 3 below shows the way that power transmission occurs in that embodiment with red arrows:

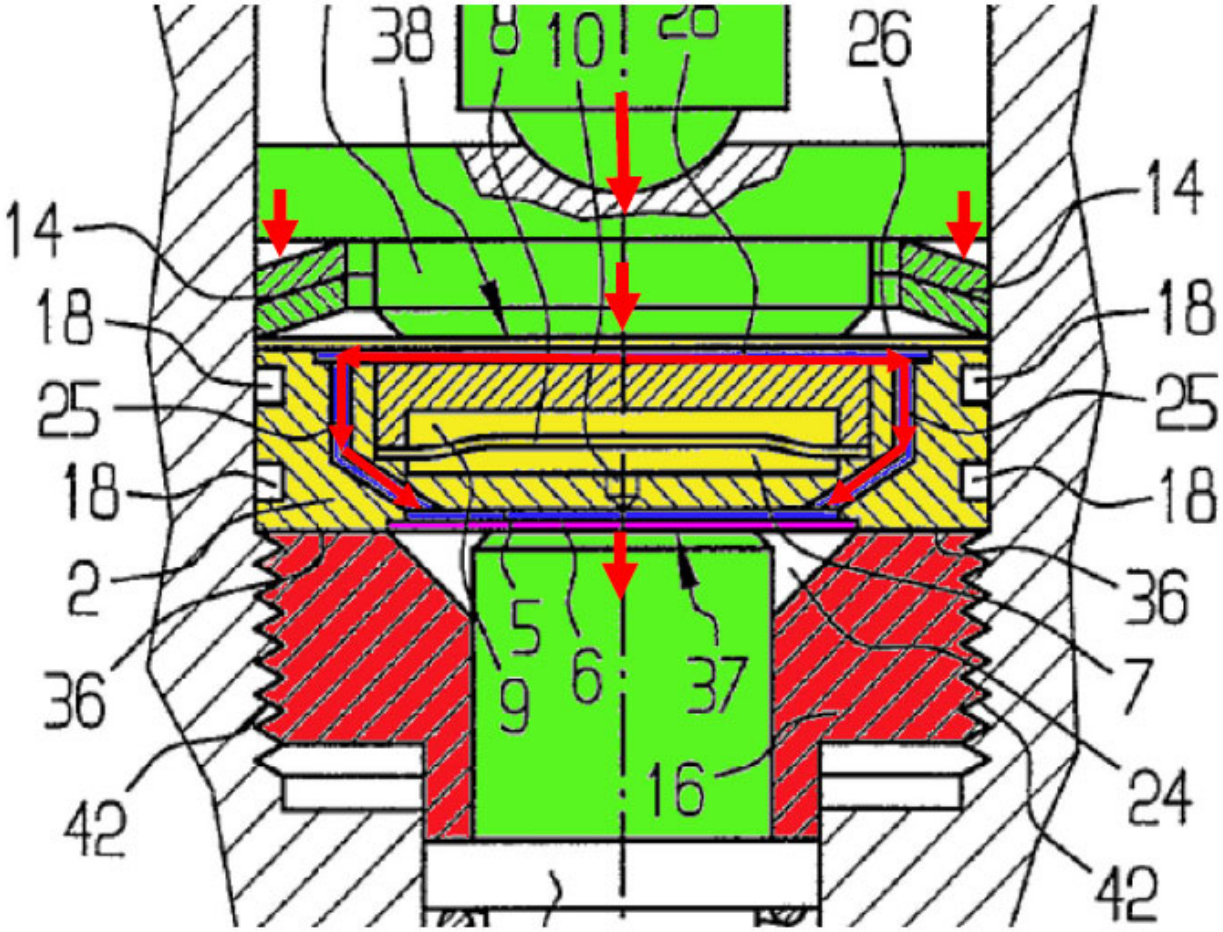

76. As the above discussion demonstrates, a POSITA would not have understood the "without stroke translation" and "with stroke translation" distinction between Figs. 1 and 3 to be a reference to the amount that drive piston 3 ultimately moves in relation to the amount that piezoelectric actuator 1 moved when it was actuated.

77. As an initial matter, the term "stroke translation" was not ordinarily used in the art. A POSITA similarly would not have understood the concept of "stroke translation" to be synonymous with "stroke amplification." A POSITA also would not agree with Dr. Quinlan's opinion that in Fig. 1 "the movement of the actuator results in the same amount of movement of the piston without amplification." *See* Ex. 1003, ¶ 220. To the contrary, the translated version of Klügl submitted as Exhibit 1006 teaches that in Fig. 1 when the actuator is controlled the amount of its movement must only be "***at least partially transmitted***" to the drive piston 3 via the movement of the transmission module 2. Ex. 1006, 8:61–68 (emphasis added).

78. This partial transmission of movement is consistent with how the device depicted in Fig. 1 would work. In operation, the actuator 1 of Fig. 1 extends longitudinally and pushes the transmission module 2 downward (along with guide sleeve 11). The downward movement of transmission module 2 applies downward force on drive piston 3 across the interface between drive piston 3 and flexible membrane 6 in order to cause drive piston 3 to move longitudinally down. A POSITA would understand that the innate flexibility of flexible membrane 6 means that a specific movement of the actuator 1 would be "partially transmitted" to the drive piston 3, and never "always fully transmitted."

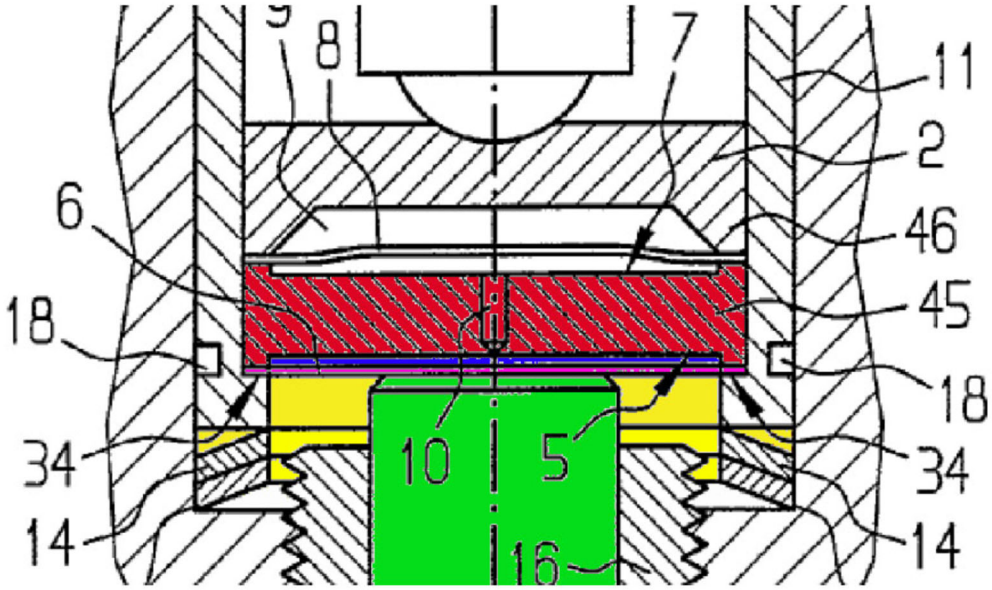
9
8
7
11
2
6
46
45
18
18
34
10
5
34
14
16
14

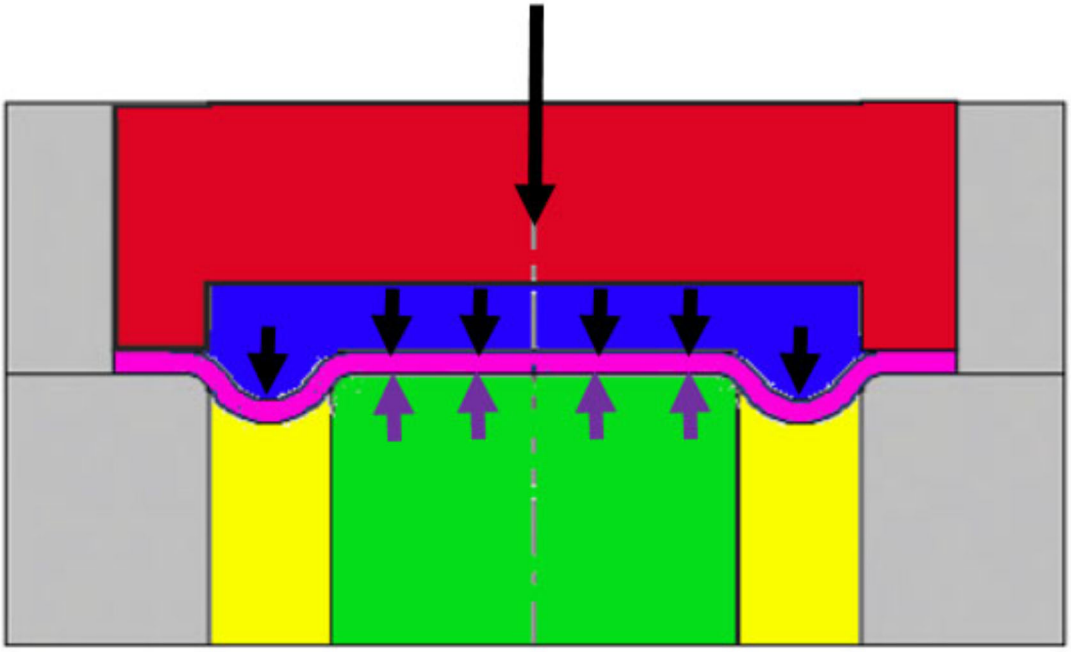

79. As illustrated above, the upper figure is an annotated version of Fig. 1 and the lower figure is a graphical representation of the same. In the graphical representation, as transmission module 2 and guide sleeve 11 (red) move downward (large black arrow) transmission module 2 applies a downward force through pressure chamber 5 and flexible membrane 6 (small black arrows). The drive piston 3 (green) exerts an opposite, upward force (purple arrows) on the portion of the flexible membrane 6 (pink) that is in contact with drive piston 3. Due to the inherent flexibility and pliability of flexible membrane 6, the membrane will tend to deform longitudinally upward where it contacts the drive piston and bulge outward where unconstrained in the annular area (i.e., void space depicted in yellow) between the edge of the drive piston 3 and the wall of transmission module 2 and guide sleeve 11 in order to accommodate the volume of the transmission fluid contained therein and the pressure differences created within the transmission fluid.

80. A POSITA would understand that fluids move from higher pressure to lower pressure. During actuation, there will be higher pressure in transmission fluid near the contact area between flexible membrane 6 and drive piston 3 and lower pressure at the annular area of flexible membrane 6 where there are no upward forces being applied. As a result, the transmission fluid will flow outward and cause a thinning of the transmission fluid layer in pressure chamber 5 above drive piston 3

and a bulging of transmission fluid in the annular area of pressure chamber 5. In all embodiments shown, Klügl only ever specifies and describes membrane 6 as a "flexible" membrane or element acknowledging that this flexibility is a necessary and desirable feature of its intended purpose and behavior.

81. Contrary to Dr. Quinlan's opinions (Ex. 1003, ¶¶ 223–27, 233, and 234), the low compressibility of the hydraulic fluid and throttle 10 reinforces why flexible membrane 6 in Fig. 1 will deform during actuation and not have a substantially constant thickness. The low compressibility of the hydraulic fluid means it will retain a substantially constant total volume. The fact that during actuation "only an insignificant amount of transmission medium" flows through throttle 10 into compensation chamber 7 means that any displacement of the transmission medium during actuation will have to go somewhere else. As already explained, this "somewhere else" is outward toward the annular portion of pressure chamber 5.

82. Dr. Quinlan incorrectly opines that "the hydraulic fluid in chamber 5 will not flow" during actuation. Ex. 1003, ¶ 224. A POSITA would understand that the hydraulic fluid (or "transmission medium") disclosed in the translated version of Klügl submitted as Exhibit 1006 is the same between all three figures. The only way that the device associated with Fig. 3 will work is if the transmission medium

contained in second pressure chamber 28, lines 25, ***and*** pressure chamber 5 flows ***during*** actuation. The same fluid properties that allow and require the transmission medium to flow during actuation in Fig. 3 also will allow and require flow during the actuation of Fig. 1.

83. Dr. Quinlan's demonstrative in paragraph 225 is not a correct representation of Klügl's Fig. 1. The demonstrative reflects a closed cylinder in which the contact surfaces between the actuator and hydraulic fluid and the hydraulic fluid and control piston are the same. As discussed at length, Fig. 1 does not have these contact surface profiles. Actuator 1 in Fig. 1 only contacts a small portion of the top portion of transmission module 2. And only about half of first membrane 6's length is in contact with the surface of drive piston 3. As such, the demonstrative does nothing to demonstrate how the hydraulic fluid actually would behave during the actuation of Fig. 1.

84. Dr. Quinlan's demonstrative in paragraph 225 also is not a correct representation of Klügl's Fig. 3. The demonstrative reflects a closed cylinder in which the radius of the contact surface between the actuator and hydraulic fluid is double the radius of the contact surface between the hydraulic fluid and control piston. Based on examination of the figure, Fig. 3 does not have these contact surface profiles. If anything, as shown in the demonstrative below, the surface area depicted

in Fig. 3 for the contact surface between circular plunger surface 38 and third membrane 26 appears to be basically the same size as the contact surface between pressure chamber 5 and flexible membrane 6:

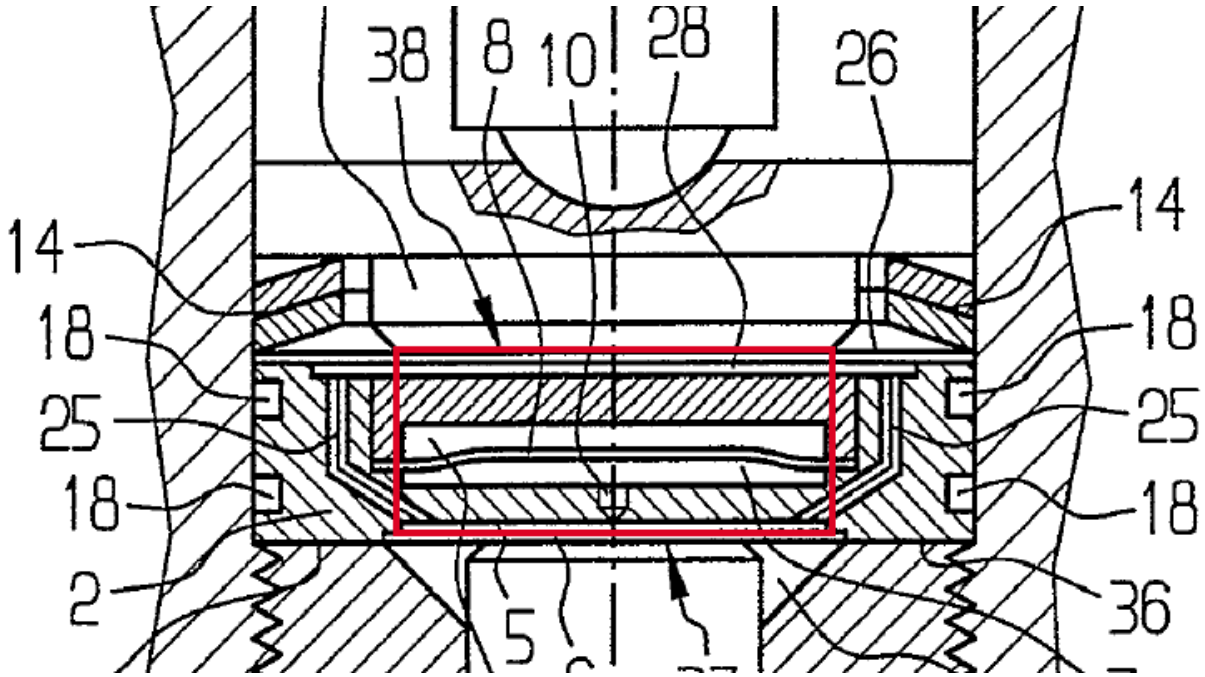

As such, Dr. Quinlan's demonstrative does nothing to demonstrate how the hydraulic fluid actually would behave during the actuation of Fig. 3. Further, the term "amplification" does not show up in the specification or claims of the translated version of Klügl submitted as Exhibit 1006. In fact, claim 7 only requires that "the movement of the actuator (1) is transmitted to the control element (3)." In sum, a POSITA would not understand Fig. 3 to disclose or teach the concept of amplification or that amplification is the "with" and "without" difference between Fig. 1 and Fig. 3.

85. Dr. Quinlan's demonstrative also reflects a fundamental misunderstanding of these three-dimensional devices when he opines that the "stroke ratio" of the bottom figures would be 1:2. Ex. 1003, ¶¶ 225–27. The amount of amplification that would occur is a function of the volume of hydraulic fluid displaced during the depicted movement. In the bottom figures, the volume of hydraulic fluid displaced in a cylinder of radius 1 unit with a movement of 1 distance unit for the actuator would be 3.14 ($3.14*1^2*1$ ($V=\pi r^2h$)). This volume of fluid would cause the hydraulic fluid in the lower portion of the cylindrical hydraulic fluid chamber of radius one-half unit and consequently the control piston to move 4 distance units ($4=3.14/3.14*.5^2$ ($h=V/\pi r^2$). This would be a ratio of 1:4, not 1:2, in the relative displacement of the control piston.

86. Dr. Quinlan's substantially uniform thickness opinion also relies on the express disclosure of a claimed "stroke ratio" and "stroke transmission" in connection with Fig. 3 of the translated version of Klügl submitted as Exhibit 1006. *See* Ex. 1003, ¶¶ 221, 222, 225–27. As an initial matter, I understand that the use of "stroke ratio" and "stroke transmission" in the paragraph found at column 7, lines 9 to 20 is an incorrect translation of the original German version of Klügl, which uses the same word in both instances as that translated earlier in Exhibit 1006 as "stroke translation." Ex. 2026, Decl. of Heike Holthaus ("Holthaus Decl.") ¶¶ 4–7. Further,

contrary to Dr. Quinlan's incomplete quote in paragraph 221, Klügl does not say anything about a "stroke ratio" in connection with Fig. 1. Regardless, as discussed above, a POSITA would not agree that Fig. 3 discloses the concept of amplification even as translated in Ex. 1006. If anything, the teaching that Dr. Quinlan points to in the translated version of Klügl submitted as Exhibit 1006 about the required deformation of flexible membrane 6 ***during*** actuation in Fig. 3 because of low compressibility hydraulic fluid only reinforces that a POSITA would understand the flexible membrane 6 of Fig. 1 also would deform ***during*** actuation.

87. The translated version of Klügl submitted as Exhibit 1006 relies on the flexibility of the membranes to maintain the drive piston 3 in contact with the first membrane 6. Ex. 1006, 3:50–4:10, 4:25–31. In the absence of the flexibility of the membrane 6, the drive piston 3 would not be able to take up or accommodate any variation in dimensionality induced by thermal effects or wear. The required "flexibility" of membrane 6 so that "automatic adjustment" can occur after actuation reinforces that the membrane will behave in a flexible manner ***during*** actuation. And in both circumstances, the fluid layer of the transmission medium in the pressure chamber 5 will ***not*** be of substantially uniform thickness across the radial dimension of membrane 6 when membrane 6 is subject to flexure.

88. In sum, it is my opinion that a POSITA would not understand Klügl to teach or disclose the claimed "hydraulic link assembly" of claim 1 of the '829 Patent, including "whereby said hydraulic fluid acts substantially as a solid with said thickness being substantially constant while said actuator assembly is activated" or "wherein said thickness of said hydraulic link is adjustable while said actuator is not activated in response to changes in the dimensional relationship between components of said injection valve to maintain a desired valve needle lift upon activation of said actuator assembly."

89. It also bears noting that over time, a POSITA would expect the membranes (or diaphragms) disclosed in the translated version of Klügl submitted as Exhibit 1006 to be susceptible to failure, including pulling away from points of attachment, leakage, and rupture. Ex. 2019, 1:43-51; Ex. 2020, 1:48-52. A POSITA would also understand that the flexibility of a membrane would likely change depending on the temperature of the operating environment and the differential pressure across the membrane. Ex. 2019, 1:43-51.

C. U.S. Patent No. 5,779,149 ("Hayes") (Ex. 1024)

90. Hayes teaches a fuel injector that utilizes an active "hydraulic amplifier" mechanism to open a control valve that allows for the injection of fuel by exploiting a pressure differential across an injection needle. Ex. 1024, 1:32–35. As

explained, "[t]he present invention uses a simple hydraulic amplifier to increase the stroke of the piezoelectric actuator and compensate for tolerances and shifts due to temperature and wear." Ex. 1024, 1:32–35.

91. With reference to the annotated Fig.1 below, high pressure fuel (red) is supplied to the injector. Ex. 1024, 2:45–49. Spring 26 biases the injection needle 3 downward against seat 4. Ex. 1024, 3:18–21. Drain line 7 is maintained at a lower pressure than the high-pressure fuel so that a volume of lower-pressure fuel (light blue) is maintained above control valve1 (yellow). Ex. 1024, 3:36–62.

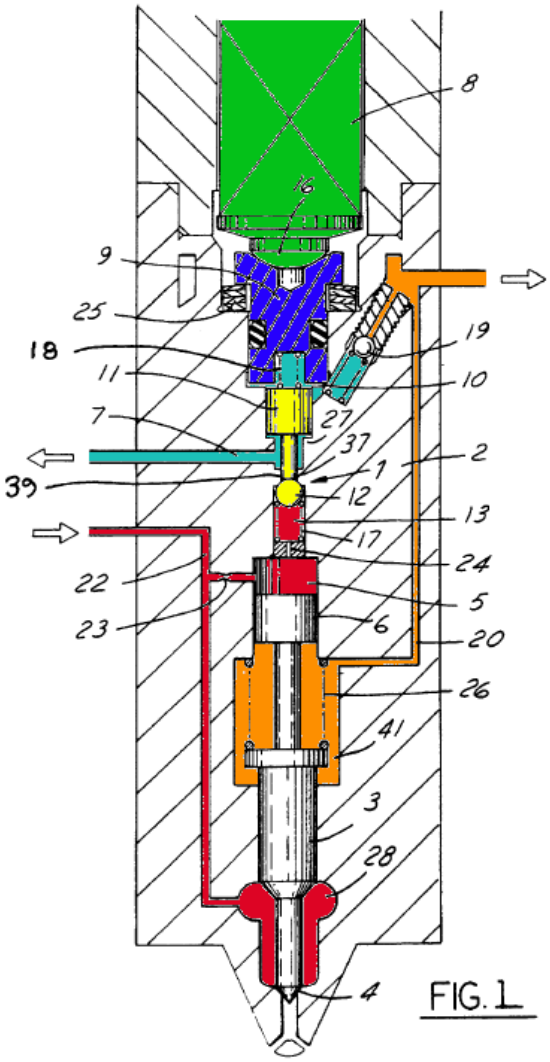

92. In operation, actuator 8 (green) extends and pushes first piston 9 (blue) downward. Ex. 1024, 2:16–27. The first piston 9 (blue) faces a hydraulic chamber (filled with the lower-pressure fuel) that is also faced by second piston 11 (yellow). Ex. 1024, 2:16–27.

93. The surface area of the first piston 9 is substantially larger than the surface area of the second piston 11 such that the stroke of the second piston 11 is

much longer than the stroke of the first piston 9, multiplying or amplifying the movement produced by the extension of the actuator 8. Ex. 1024, 3:48–51.

94. Downward movement of the second piston 11 (and attached sealing component 12) opens control valve 1 and puts control chamber 5 in fluid communication with drain line 7. Ex. 1024, 3:36–44. With the pressure in control chamber 5 reduced due to the presence of flow restrictor 23, a pressure differential across the power piston 6 will move the injection needle 3 upward and away from seat 4, thus allowing high-pressure fuel to be injected through seat 4. Ex. 1024, 3:53–63.

95. Once control valve 1 is closed, the high-pressure fuel (red) will refill control chamber 5 through flow restrictor 23 and the injection needle will again seal against the seat 4 through the balance of the prevailing forces. Ex. 1024, 4:1–14.

X. THE COMBINATION OF WIRBELEIT AND KLÜGL DOES NOT RENDER ANY CHALLENGED CLAIM UNPATENTABLE

A. The Combination Of Wirbeleit And Klügl Lacks Elements Of The Challenged Claims (Ground 1)

96. I disagree with Dr. Quinlan's opinions that the combination of Wirbeleit and Klügl render obvious claims 1–3, 6, 11, 12, 14, 15, 18 and 19 of the '829 Patent. Ex. 1003, ¶ 143. As discussed at length above, it is my opinion that a POSITA would not understand Klügl to teach or disclose the claimed "hydraulic link

assembly" of claim 1 of the '829 Patent, including at least "whereby said hydraulic fluid acts substantially as a solid with said thickness being substantially constant while said actuator assembly is activated" and "wherein said thickness of said hydraulic link is adjustable while said actuator is not activated in response to changes in the dimensional relationship between components of said injection valve to maintain a desired valve needle lift upon activation of said actuator assembly." Dr. Quinlan also does not opine that Wirbeleit teaches or discloses these claim elements. Because all the other claims challenged in Ground 1 (2, 3, 6, 11, 12, 14, 15, 18 and 19) all depend from claim 1, it is my opinion that none of the challenged claims would have been obvious over the combination of Wirbeleit and Klügl.

97. Regarding claim 11, Dr. Quinlan admits that Wirbeleit does not teach the limitation. Ex. 1003, ¶ 257. Neither does the translated version of Klügl submitted as Exhibit 1006. A POSITA would not consider it obvious that the claimed range would be contemplated by either reference. In general, a POSITA would not contemplate a very low lift around a fuel injector needle due to the non-linear flow effects that naturally occur around a needle at low lifts. This failure also applies to claim 12 because it depends from claim 11.

B. A POSITA Would Not Have Been Motivated To Combine Wirbeleit And Klügl (Ground 1)

98. I disagree with Dr. Quinlan's opinions that a POSITA would have been motivated to combine Wirbeleit and Klügl, or that they would have had a reasonable expectation of success in doing so. Ex. 1003, ¶¶ 144, 291–346.

99. In my opinion, the only reasons to combine Wirbeleit and Klügl are based on impermissible hindsight. For example, such impermissible hindsight includes substituting an unnecessary adjustable hydraulic component from Klügl for the hydraulic transmission element of Wirbeleit in an effort to allege the obviousness of the hydraulic link assembly limitation of claim 1 of the '829 Patent. Wirbeleit requires no such adjustable hydraulic component as its design relies on other means to make adjustment for wear, aging and thermal effects.

100. I disagree with Dr. Quinlan's opinions that a POSITA would modify Wirbeleit's hydraulic transmission element 22 in order for it to be operable and would have considered Klügl's transmission module 2 for use with the remainder of the Wirbeleit design. Ex. 1003, ¶¶ 292–300.

101. Contrary to Dr. Quinlan's opinion, the devices disclosed in Wirbeleit and Klügl are not "structurally and functionally similar" in ways that would make any such substitution "particularly suitable." Ex. 1003, ¶¶ 295–300. Klügl's transmission module 2 is not like Wirbeleit's hydraulic transmission element 22.

Transmission module 2 contains far more complexity and intricacy than anything a POSITA would understand to have been contemplated for Wirbeleit's transmission element 22. The fact that both devices use an actuator or valve closing spring, features common to virtually every injection valve or fuel injector in this timeframe, add nothing to a motivation to combine.

102. Further, given the differences in the principles of operation, a POSITA would not have been motivated to combine elements of an outwardly opening fuel injector with an inwardly opening fuel injector.

103. I also disagree with Dr. Quinlan's opinions that a POSITA would "have been motivated to use Klügl's 'transmission module 2' with Wirbeleit because doing so would provide other important benefits that would improve Wirbeleit's operation." Ex. 1003, ¶¶ 301–13.

104. First, a POSITA would not have been motivated to make the combination because, if anything, Klügl would make the operation of the system of Wirbeleit more complex.

105. Because Wirbeleit directly monitors and adjusts the control needle, the "electronic control unit" system of Wirbeleit can adjust the position of the control needle to compensate for any dimensional variations due to wear or thermal effects. Ex. 1004, 1:59–63; 2:4–10; 2:56–59; 3:1–5. Therefore, Wirbeleit would not need to

add the complexity of Klügl to solve a problem (of compensation for dimensional variation) for which it already had a solution.

106. Further, adding the membrane-based hydraulic transmission module of Klügl, would only add additional dimensional variations (from the inherent flexibility of the membrane under both transient and static pressure and mechanical loads) for which the system of Wirbeleit would have to compensate, likely with variable compensation across the time of actuation – a very difficult requirement for any control system. Stated another way, the addition of Klügl′s transmission module 2 would be counterproductive to the system of Wirbeleit.

107. Second, a POSITA would have been aware that membrane-based systems such as Klügl were known to have technological problems at the high pressures and temperatures that fuel injectors like those disclosed in the ’829 Patent were being designed for, including the variations in pressure and volume inherent in fluid systems contained within flexible elements. These variations would likely be themselves highly susceptible to short- and long-term variations in wear and temperature of the individual components in a fuel injector. As such, a POSITA would have appreciated that adding Klügl’s transmission module 2 to the design of Wirbeleit would degrade, rather than “substantially improve,” Wirbeleit’s performance.

108. I also disagree with Dr. Quinlan's opinions that a POSITA would have been motivated to use Klügl's transmission module 2 because it would allow for a more compact injector and alleged benefits. Ex. 1003, ¶¶ 314–19.

109. Even a simple visual inspection of the relevant portion of Wirbeleit's Figure (figure on the right below) and Dr. Quinlan's combination of the Wirbeleit and Klügl embodiments (figure on the left below) demonstrates that the inserted transmission module 2 and its related components (all yellow) take up significantly

more space than Wirbeleit's hydraulic transmission element 22 (yellow):

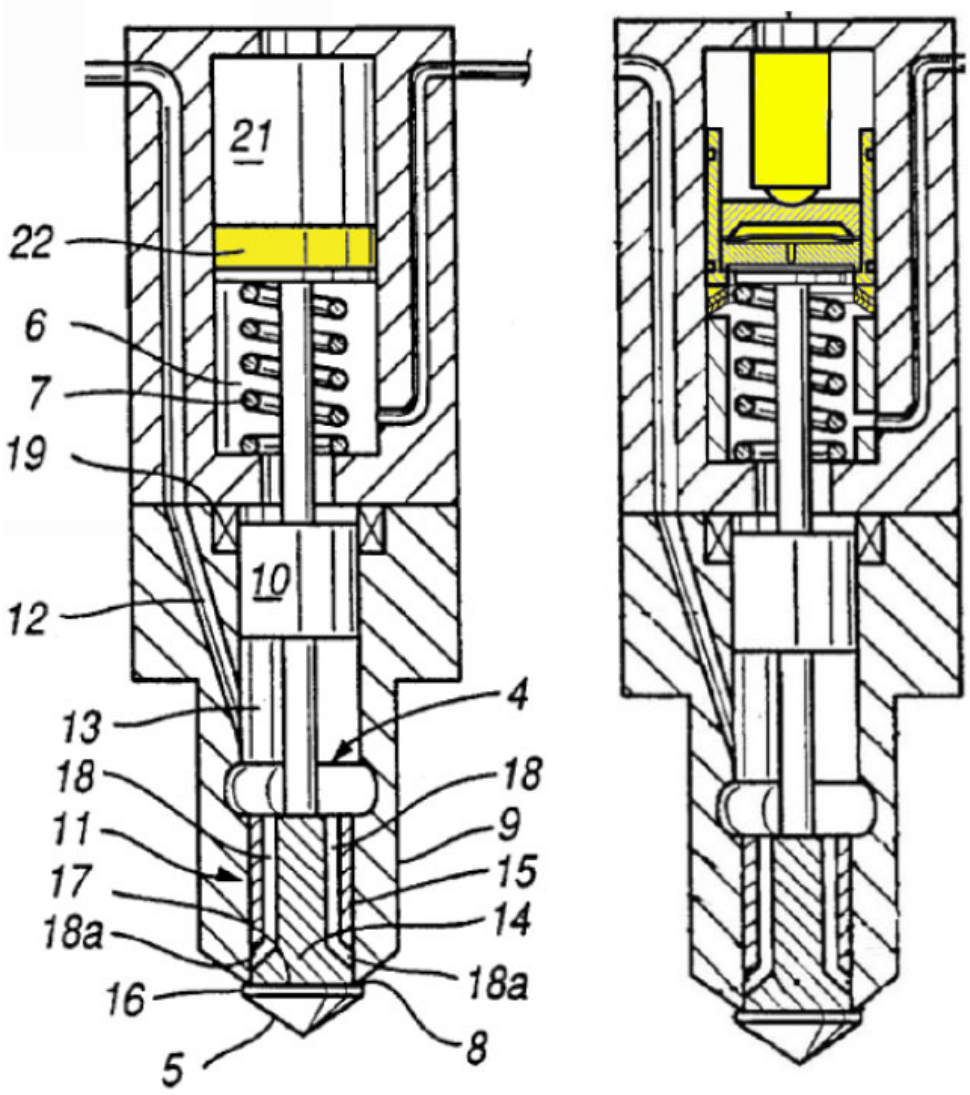

110. As the above figure also highlights, Dr. Quinlan's combination actually modified the teachings of Klügl's transmission module 2 and its related components. The combination changes the width of the drive piston to be the same dimension as flexible membrane 6. In making this change, open areas below the annular areas of flexible membrane 6 were removed. Dr. Quinlan's changes also directly expose at

least disk spring 14 and ring-shaped peripheral first stop 30 to constant contact with the fluid designed to be in Wirbeleit's spring chamber 6. These alterations change the structure and principles of operation for the Klügl design in a manner not taught or disclosed in Klügl. Dr. Quinlan made these changes without explanation or justification.

111. I also disagree that Dr. Quinlan's combination of Wirbeleit and Klügl would "effectively eliminate the possibility of delays of motion transmission from the actuator to control piston." Ex. 1003, ¶ 320. To the contrary, the added complexity of transmission module 2 and its related needed components would increase the possibility of delays over Wirbeleit's hydraulic transmission element 22.

112. I also disagree with Dr. Quinlan's opinions that a POSITA would have been motivated to use Klügl's transmission module 2 because it would allow for a simplified manufacturing process. Ex. 1003, ¶¶ 321 and 322. The addition of at least pressure chamber 5, flexible membrane 6, compensation chamber 7, pre-stressed spring plate 8, recess 9, connecting bore/throttle 10, guide sleeve 11, disk spring 14, ring-shaped peripheral first stop 30, base plate 45, and cover plate 46 would add significant intricacy and complexity to the manufacture, assembly, and calibration of the resultant device.

113. Klügl does not disclose that its "transmission module 2" could be preassembled. Rather, it discloses that its "housing with the power transmission device" is preassembled for insertion into the "housing of the injection valve during manufacture." Ex. 1006, 1:29–33. As such, just the use of the transmission module and related required elements would do nothing to provide the simplicity Dr. Quinlan alleges. Simply reviewing the list of components needed to make Klügl's transmission module operational, including at least pressure chamber 5, flexible membrane 6, compensation chamber 7, pre-stressed spring plate 8, recess 9, connecting bore/throttle 10, guide sleeve 11, disk spring 14, ring-shaped peripheral first stop 30, base plate 45, and cover plate 46, readily demonstrates the added manufacturing and assembly complexity.

114. I also disagree with Dr. Quinlan's opinions that a POSITA would have been motivated to use Klügl's transmission module 2 because it would allow for additional design modifications to Wirbeleit's injector. Ex. 1003, ¶¶ 323–26. The proposed additional modifications again would add complexity to Wirbeleit's injector and also are unnecessary because Wirbeleit directly monitors and adjusts the control needle using electronic means to compensate for any dimensional variations.

115. I also disagree with Dr. Quinlan's "routine design choice" and "reasonable expectation of success" opinions. Ex. 1003, ¶¶ 334–46. As previously

discussed, Wirbeleit's transmission element 22 is not comparable to Klügl's transmission module 2. The addition of the components necessary to add in the automatic adjustment feature of Klügl (pressure chamber 5, flexible membrane 6, compensation chamber 7, pre-stressed spring plate 8, recess 9, connecting bore/throttle 10, guide sleeve 11, disk spring 14, ring-shaped peripheral first stop 30, base plate 45, and cover plate 46) is a wholesale reworking of the hydraulic component in Wirbeleit, not a design choice. Further, even without Klügl's transmission module 2 and necessary related components, because Wirbeleit directly monitors and adjusts the control needle, the "electronic control unit" system of Wirbeleit can adjust the position of the control needle to compensate for any dimensional variations due to wear or thermal effects. Ex. 1004, 2:4–12; 2:56–59; 3:1–11.

116. As previously addressed, the structure and function of the valves disclosed in Wirbeleit and Klügl are different. The alleged similarities do not speak at all to resolving the complexities that would arise in an effort to create the combination of these two references reflected in Dr. Quinlan's paragraph 238. In fact, it is my opinion that Dr. Quinlan's combination would not be operational.

117. As an initial matter, the combination does not accurately incorporate Klügl's transmission module 2. For example, the combination no longer has the

voids under the annular portions of flexible membrane 6, which would change the operation of at least pressure chamber 5, flexible membrane 6, compensation chamber 7, pre-stressed spring plate 8, recess 9, and connecting bore/throttle 10. It also will impact the amount of the interaction between the actuator and drive piston because of the changed contact surface between the lower surface of flexible membrane 6 and top surface of drive piston 3.

118. The combination also will ultimately result in an injection valve "hydro locked" in the open position, which is the worst possible position for an injection valve to get stuck because the engine will get flooded (or worse). A review of Klügl's Fig. 1 shows that transmission module 2 and its related components are not exposed to fluid. However, when Dr. Quinlan combined these elements with Wirbeleit the components became exposed to fluid. This can readily be seen by the relief line depicted in the combination. The same chamber connected to the relief line contains the bottom of the transmission module, including the springs and guide sleeve. Over the course of time, the fluid from this chamber will fill the chamber above the transmission module containing the actuator because it has no relief line. *See* Ex. 1024, 2:16–27, 2:61–65 (disclosing leakage in the clearance between pistons and an injector body). When sufficiently full, the sleeve will no longer be able to fully

retreat upward when actuation has ended and the injection valve will be stuck in the open position.

C. The Combination Of Wirbeleit, Klügl, And Newcomb Lacks Elements Of The Challenged Claim (Ground 2)

119. I disagree with Dr. Quinlan's opinions that the combination of Wirbeleit, Klügl, and Newcomb render obvious claim 20 of the '829 Patent. Ex. 1003, ¶ 348. Because claim 20 depends on claim 1, the opinions previously expressed regarding claim 1 apply equally.

D. A POSITA Would Not Have Been Motivated To Combine Wirbeleit, Klügl, And Newcomb (Ground 2)

120. I disagree with Dr. Quinlan's opinions that a POSITA would have been motivated to combine Wirbeleit, Klügl, and Newcomb, or that they would have had a reasonable expectation of success in doing so. Ex. 1003, ¶¶ 360 and 367. Because this claimed motivation includes Wirbeleit and Klügl, the opinions previously expressed about those references regarding a lack of motivation to combine and lack of a reasonable expectation of success apply equally. For the same reasons that I disagree that a POSITA would have been motivated to combine Klügl with Hayes, I disagree that a POSITA would have had motivation to combine Newcomb with that combination. A POSITA would have understood that adding Newcomb would further complicate an already complicated design.

XI. THE COMBINATION OF KLÜGL AND HAYES DOES NOT RENDER ANY CHALLENGED CLAIM UNPATENTABLE

A. The Combination Of Klügl And Hayes Lacks Elements Of The Challenged Claims

121. I disagree with Dr. Quinlan's opinions that the combination of Klügl and Hayes render obvious claims 1–3, 6, 11, 12, 14, 15, 18 and 19 of the '829 Patent. Ex. 1003, ¶ 370.

122. I disagree with Dr. Quinlan's opinion that Klügl discloses "a fuel inlet port" as claimed in claim element 1(a)-1. Ex. 1003, ¶¶ 377–91. The claimed "fuel inlet port" needs to be within the "valve housing" claimed as claim element 1(a). Dr. Quinlan identifies housing 12 from Fig. 1 of Klügl as the "valve housing." Ex. 1003, ¶¶ 374–76. However, Dr. Quinlan does not identify anything in housing 12 as the "fuel inlet port." Instead, he points to "feeding line 22" from Hayes Fig. 1 and acknowledges that this line would be somewhere other than in Klügl's housing 12. Ex. 1003, ¶¶ 378–91.

123. I disagree with Dr. Quinlan's opinion that Klügl discloses "an interior chamber fluidly connected to said fuel inlet port" as claimed in claim element 1(a)-2. Ex. 1003, ¶¶ 392–97. The claimed "interior chamber" needs to be within the "valve housing" claimed as claim element 1(a). As an initial matter, because Dr. Quinlan's opinion fails to demonstrate claim element 1(a)-1 it cannot satisfy claim

element 1(a)-2 either. Separately, what Dr. Quinlan points to as the relevant "interior chamber" is not within housing 12 from Fig. 1 of Klügl. Instead, he points to chamber 28 from Fig. 1 of Hayes. Ex. 1003, ¶ 396.

124. I disagree with Dr. Quinlan's opinion that Klügl discloses "a nozzle comprising a nozzle orifice providing a fluid passage from said interior chamber to said combustion chamber" as claimed in claim element 1(a)-3. Ex. 1003, ¶¶ 398–403. The claimed "nozzle" and "nozzle orifice" need to be within the "valve housing" claimed as clam element 1(a). As an initial matter, because Dr. Quinlan's opinion fails to demonstrate claim element 1(a)-2 it cannot satisfy claim element 1(a)-3 either. Separately, what Dr. Quinlan points to as the relevant "nozzle" and "nozzle orifice" are not within housing 12 from Fig. 1 of Klügl. Instead, he points to an area below chamber 28 from Fig. 1 of Hayes. Ex. 1003, ¶ 402.

125. I disagree with Dr. Quinlan's opinion that Klügl discloses claim element 1(b). Ex. 1003, ¶¶ 404–18. I note that for this claim limitation Dr. Quinlan points to a structure within housing 12 from Fig. 1 of Klügl, which serves to highlight the failures noted above. However, I disagree that piston 3, control needle 32, and ball 4 from Fig. 1 of Klügl form a "'valve needle' that 'contacts a valve seat.'" Ex. 1003, ¶ 406. As previously discussed, ball 4 is a distinct spherically shaped physical component (i.e., it is a separate piece from control needle 32) not "attached" to the

control needle as Dr. Quinlan opines. Ex. 1006, 2:51–55. While it is the case that the movement of ball 4 is what "opens" and "closes" the valve depicted in Fig. 1 of Klügl, a POSITA would not understand the combination of piston 3, control needle 32, and ball 4 to be a "valve needle." In addition, Dr. Quinlan appears to be pointing to relief chamber 44 as the "interior chamber" for this limitation, but that is different from what he identified as the "interior chamber" for claim element 1(a)-2. Dr. Quinlan cannot shift between different "interior chambers" because this element refers back to "said interior chamber."

126. I disagree with Dr. Quinlan's opinion that Klügl discloses claim elements 1(c) and 1(d). Ex. 1003, ¶¶ 419–28. Because what Dr. Quinlan points to in claim element 1(b) would not be the claimed "valve needle" these limitations also are not met.

127. As discussed at length above, it is my opinion that a POSITA would not understand Klügl to teach or disclose the claimed "hydraulic link assembly" of claim element 1(e) of the '829 Patent. Dr. Quinlan also does not opine that Hayes teaches or discloses these claim elements.

128. For all of the above reasons, because all the other claims challenged in Ground 3 (2, 3, 6, 11, 12, 14, 15, 18 and 19) all depend from claim 1, it is my opinion

that none of the challenged claims would have been obvious over the combination of Klügl and Hayes.

129. Regarding claim 11, Dr. Quinlan does not opine that the translated version of Klügl submitted as Exhibit 1006 expressly discloses this limitation. A POSITA would not consider it obvious that the claimed range would be contemplated by Klügl. In general, a POSITA would not contemplate a very low lift around a fuel injector needle due to the non-linear flow effects that naturally occur around a needle at low lifts. This failure also applies to claim 12 because it depends from claim 11.

130. For the reasons already stated regarding claim elements not included within what Dr. Quinlan identified as the "valve housing," I do not agree that Klügl discloses claim 19. Ex. 1003, ¶¶ 466 and 467.

B. A POSITA Would Not Have Been Motivated To Combine Klügl And Hayes

131. I disagree with Dr. Quinlan's opinions that a POSITA would have been motivated to combine Klügl and Hayes, or that they would have had a reasonable expectation of success in doing so. Ex. 1003, ¶¶ 468 and 469.

132. For several reasons, a POSITA would not have combined the hydraulic transmission module of Klügl with the system of Hayes.

133. In the annotated version of Fig. 1 of Hayes below, volumes open to the high pressure feeding line (22) are shaded red and volumes open to the low pressure drain line (7) are shaded in light blue. The differential pressure between the point labeled as Pl and the point labeled as P2 is critical to the operation of the injector and the pressure at P2 must be higher than the pressure at Pl in order for the injector to operate properly.

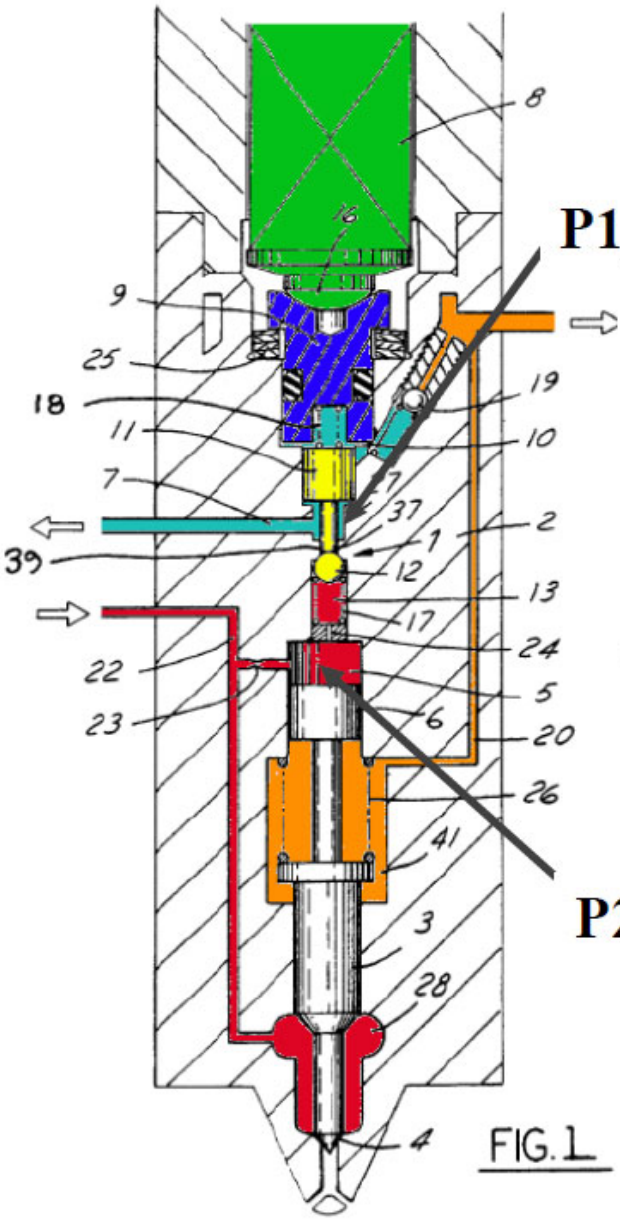

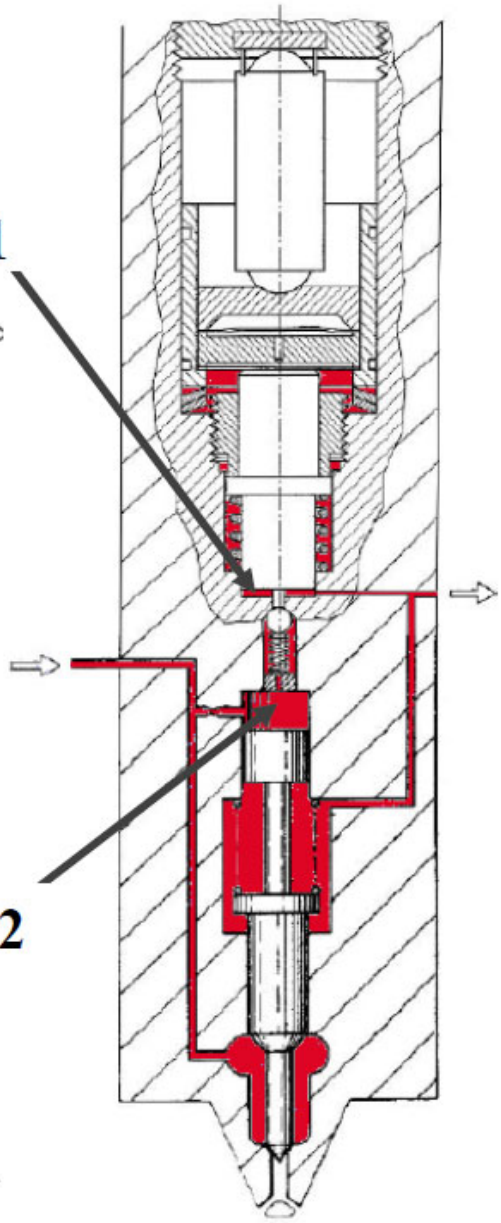

Annotated Fig. 1 from Hayes Annotated Fig 1 from Petition

134. As shown above, the volumes that are open to the high-pressure feeding line are shaded in red. As can be seen, the fuel present at points P1 and P2 in Hayes Fig. 1 are at different pressures. By contrast, because Dr. Quinlan's combination

failed to include drain line 7 and small refill valve 19 of Hayes, the fuel present at points P1 and P2 in Dr. Quinlan's combination is at the same pressure. Without a differential pressure across the control valve, opening the control valve will not have any effect on the needle position or movement, which means the needle will not lift off the needle seat, and the injector will not operate to regulate the flow of fuel, rendering it useless.

135. Additionally, Dr. Quinlan's combination removes the "hydraulic amplifier" that Hayes teaches is part of its "present invention." Ex. 1024, 1:32–44. As Hayes explains, the surface area of the first piston 9 is substantially larger than the surface area of the second piston 11 such that the stroke of the second piston 11 is much longer than the stroke of the first piston 9, multiplying or amplifying the movement produced by the extension of the actuator 8. Ex. 1024, 3:48–51. As can be seen in the annotated side-by-side figures above, first piston 9 and second piston 11 have been removed in Dr. Quinlan's combination. A POSITA would not have made such a combination.

C. The Combination Of Klügl, Hayes, And Newcomb Lacks Elements Of The Challenged Claim (Ground 4)

136. I disagree with Dr. Quinlan's opinions that the combination of Klügl, Hayes, and Newcomb render obvious claim 20 of the '829 Patent. Ex. 1003, ¶ 471.

Because claim 20 depends on claim 1, the opinions previously expressed regarding claim 1 apply equally.

D. A POSITA Would Not Have Been Motivated To Combine Klügl, Hayes, And Newcomb (Ground 4)

137. Dr. Quinlan offers no opinions that a POSITA would have been motivated to combine Klügl, Hayes, and Newcomb, or that they would have had a reasonable expectation of success in doing so. For the same reasons that I disagree that a POSITA would have been motivated to combine Klügl with Hayes, I disagree that a POSITA would have had motivation to combine Newcomb with that combination. A POSITA would have understood that adding Newcomb would further complicate an already complicated design.

XII. CONCLUSION

138. All statements made herein of my own knowledge are true, all statements made herein on information and belief are believed to be true, and these statements were made with the knowledge that willful false statements and the like are punishable by fine or imprisonment, or both, under 18 U.S.C. § 1001.

Dated: May 3, 2024

Christopher M. Atkinson

Digitally signed by Christopher M. Atkinson
Date: 2024.05.03 10:35:22 -04'00'

Dr. Christopher Atkinson