**IN THE UNITED STATES DISTRICT COURT**
**FOR THE EASTERN DISTRICT OF TEXAS**
**MARSHALL DIVISION**

| | |
|---|---|
| **WESTPORT FUEL SYSTEMS CANADA INC.,**<br><br>**Plaintiff,**<br><br>**v.**<br><br>**FORD MOTOR COMPANY,**<br><br>**Defendant.** | **Civil Action No. 2:21-cv-00453-RWS-RSP**<br><br>**JURY TRIAL DEMANDED** |

**PLAINTIFF WESTPORT FUEL SYSTEMS CANADA INC.'S DISCLOSURE OF ASSERTED CLAIMS AND INFRINGEMENT CONTENTIONS**

Pursuant to Local Patent Rules 3-1 and 3-2 and the Court's Order (ECF No. 13), Plaintiff Westport Fuel Systems Canada Inc. ("Westport") provides the following Disclosure of Asserted Claims and Preliminary Infringement Contentions and accompanying document production as follows:

## I. Patent Rule 3-1 Disclosures

Westport's investigation into the extent of infringement by Defendant Ford Motor Company ("Ford") is ongoing. The following disclosures are based solely on information currently available to Westport, *i.e.*, publicly available information and material retrieved from Westport's archives, which is ongoing. Westport reserves the right to and will supplement and/or modify this disclosure and preliminary infringement contentions as additional information otherwise becomes available.



Petitioner Ex. 1022, p. 1
Robert Bosch et al v. Westport
IPR2023-00293

**a. "each claim of each patent-in-suit that is allegedly infringed by an opposing party"**

Westport contends that Defendant infringes the following claims of the patents-in-suit:

- U.S. Patent No. 6,298,829 ("the '829 Patent"), claims 1-3, 6, 11, 12, 14, 15 and 18-20;
- U.S. Patent No. 6,575,138 ("the '138 Patent"), claims 1-3, 6, 13, 14, 17-21, 26-28 and 41;

**b. "for each asserted claim, a specific and separate identification of each accused apparatus, product, device, process, method, act, or other instrumentality ('Accused Instrumentality') of each opposing party"**

Westport identifies the following Accused Instrumentalities of infringing each of the Asserted Claims:

- Ford F-series and Super Duty trucks equipped with a 6.7L Power Stroke V8 Diesel engine;
- Ford F-150 trucks equipped with a 3.0L Power Stroke V6 Diesel engine;
- Ford Transit vans equipped with a 3.2L Diesel engine; and
- Ford/Motorcraft Part Nos. CN6037/6038 (9H529), CN6021/6022 (9H529), and CN6018 (9E527), provided individually or as part of an assembly.

Charts preliminarily identifying where each element of the asserted claims is found within, or performed by, each Accused Instrumentality are included as Exhibits A-B accompanying this document. As set forth above and in Exhibits A-B, based on information currently available to Westport, Westport contends that, at a minimum, Defendant directly infringes, or induces others to directly infringe, the asserted patents by making, using, offering to sell and/or selling the Accused Instrumentalities in the United States.

**c. "a chart identifying specifically where each element of each asserted claim is found within each Accused Instrumentality, including for each element that is allegedly governed by 35 U.S.C. § 112, ¶ 6, the identity of the structures, acts, or materials in the Accused Instrumentality that performs the claimed function"**

Charts preliminarily identifying specifically where each element of each asserted claim is found within each Accused Instrumentality are attached as Exhibits A-B. Westport does not contend that any element of the asserted claims is allegedly governed by 35 U.S.C. § 112, ¶ 6.

**d. "for each Accused Instrumentality and each element of each asserted claim, identification of whether the element is claimed to be literally present or present under the doctrine of equivalents"**

As shown in the charts (Exhibits A-B), all elements are literally present. However, to the extent an element is not literally present, Westport reserves its right to assert the doctrine of equivalents or rebut any such claim by Defendant. Westport also specifically reserves its right to amend these contentions as discovery proceeds and after the Court's Claim Construction Ruling as may be allowed under this Court's Local Rules and the Federal Rules of Civil Procedure.

**e. "for any patent that claims priority to an earlier application, the priority date to which each asserted claim allegedly is entitled"**

- All asserted claims of the '829 Patent are entitled to a priority date of October 15, 1999.
- All asserted claims of the '138 Patent are entitled to a priority date of October 15, 1999.

**f. "if a party claiming patent infringement wishes to preserve the right to rely, for any purpose, on the assertion that its own apparatus, product, device, process, method, act, or other instrumentality practices the claimed invention, the party must identify, separately for each asserted claim, each such apparatus, product, device, process, method, act, or other instrumentality that incorporates or reflects that particular claim"**

Westport identifies no such instrumentalities at this time but reserves its rights to amend under this Court's Local Rules and the Federal Rules of Civil Procedure.

## II. Patent Rule 3-2 Disclosures

Pursuant to Local Patent Rule 3-2, Westport has produced the following to Defendant, provided that Westport's production is not an admission that the document is evidence of or is prior art under 35 U.S.C. § 102:

**(a)** documents (e.g., contracts, purchase orders, invoices, advertisements, marketing materials, offer letters, beta site testing agreements, and third party or joint development agreements) sufficient to evidence each discussion with, disclosure to, or other manner of providing to a third party, or sale of or offer to sell, the claimed invention prior to the date of application for the patent in suit (see documents with production numbers: **WP-FORD001510 - WP-FORD01524**);

**(b)** documents evidencing the conception, reduction to practice, design, and development of each claimed invention, which were created on or before the date of application for the patent in suit or the priority date identified pursuant to P. R. 3-1(e), whichever is earlier; (see documents with production numbers: **WP-FORD000575-WP-FORD01430**); and

**(c)** a copy of the file history for each patent in suit (see documents with production numbers: **WP-FORD000001 - WP-XX000574**);

Dated April 12, 2022.

Respectfully submitted,

*/s/ Jonathan M. Pierce*
Jonathan M. Pierce
*Attorney-in-Charge*
Texas Bar No. 24027744
Federal ID No. 23801
jpierce@porterhedges.com
Miranda Y. Jones
Texas Bar No. 24065519
Federal ID No. 1147635
MirandaJones@porterhedges.com
Ray Torgerson
Texas Bar No. 24003067
Federal ID No. 22846
RTorgerson@porterhedges.com
Derek V. Forinash
Texas Bar No. 24038905
Federal ID No. 2973069
dforinash@porterhedges.com
**PORTER HEDGES LLP**
1000 Main Street, 36th Floor
Houston, TX 77002
Telephone: 713-226-6000
Facsimile: 713-228-1331

Claire A. Henry
Texas Bar No. 24053063
**WARD, SMITH & HILL PLLC**
1507 Bill Owens Parkway
Longview, Texas 75604
Telephone: (903) 757-6400
Facsmilie: (903) 757-2323
claire@wsfirm.com

***Attorneys for Plaintiff***
*Westport Fuel Systems Canada Inc.*

## CERTIFICATE OF SERVICE

I hereby certify that on this 12th day of April 2022, the foregoing was served on all counsel for Defendant via email as addressed below:

Michael S. Connor
**Alston & Bird LLP**
101 South Tryon Street, Ste. 4000
Charlotte, NC 28280-4000
Mike.connor@alston.com

Natalie C. Clayton (*pro hace vice*)
Andrew J. Ligotti (*pro hac vice)*
**Alston & Bird LLP**
90 Park Avenue
New York, NY 10016-1387
Natalie.clayton@alston.com
Andy.ligotti@alston.com

*Attorneys for Defendant Ford Motor Company*

*/s/ Jonathan M. Pierce*
Jonathan M. Pierce

Exhibit A

**P.R. 3-1 Preliminary Infringement Contentions for U.S. Patent No. 6,298,829**

The figures shown in the Accused Products column are taken from the materials found in production numbers: **WP-FORD001566 – WP-FORD001587.**

| 829 Patent Claim Element | Accused Products |
|---|---|
| 1[A]. An injection valve for injecting fuel into a combustion chamber of an internal combustion engine, said injection valve comprising: | Defendant made, offered for sale, sold, and upon information and belief imported F-Series and Super Duty trucks equipped with a 6.7L Power Stroke V8 Diesel engine utilizing 8 injection valves having part number CN6037/6038 (9H529), F-150 trucks with a 3.0L Power Stroke V6 Diesel engine utilizing 6 injection valves having part number CN6021/6022 (9H529), and Transit Vans equipped with a 3.2L Diesel engine utilizing 5 injection valves having part number CN6018 (9E527). Defendant also offered for sale, sold, and upon information and belief imported injection valves having part numbers CN6021/6022 (9H529), CN6021/6022 (9H529), and CN6018 (9E527) as individual spare parts or as part of spare part assemblies. On information and belief, the injection valve identified as part numbers CN6021/6022 (9H529), CN6021/6022 (9H529), and CN6018 (9E527) are versions of the Bosch CRI 3.0 Piezo Injector such as those having Bosch part number 0445117043 and 0445117078. *See* **WP-FORD001566 – WP-FORD001587.**<br><br>To the extent that the preamble is construed as a limitation, Defendant directly practices this limitation, literally and/or through the doctrine of equivalents, because the injection valve is used to inject fuel into a combustion chamber of an internal combustion engine.<br><br> <br>Piezo injector CRI3-27<br> <br>Piezo injector CRI3-27 with Needle Closing Control<br> 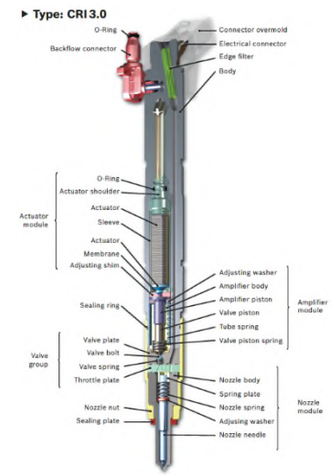 <br> |

| | |
|---|---|
| | |
| 1[B] (a) a valve housing comprising:<br>a fuel inlet port; | Fuel is supplied to the injection valve through a threaded port on the upper end of the housing. Defendant directly practices this limitation, literally and/or through the doctrine of equivalents, because the injection valve has a valve housing comprising a fuel inlet port.<br> 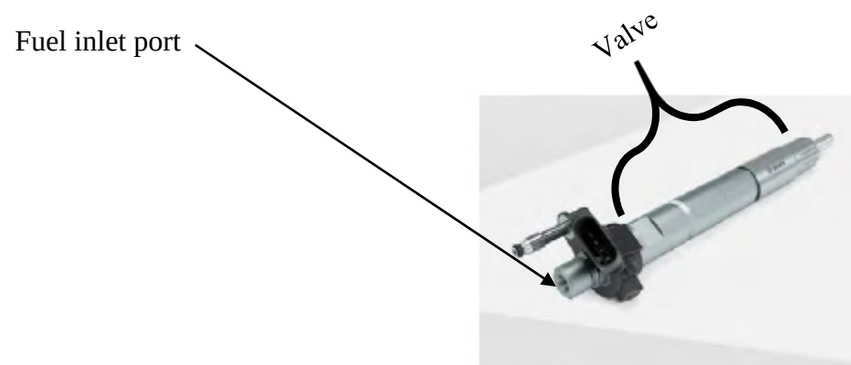 <br><br>Piezo injector CRI3-27 with Needle Closing Control |

| | |
|---|---|
| 1[C] an interior chamber fluidly connected to said fuel inlet port; and | The amplifier module is disposed with an interior chamber that is filled with the fuel that is supplied to the valve housing via the fuel inlet port. The interior chamber is generally bounded by the upper end of the valve plate at the lower end of the actuator. Because the interior chamber is filled with fuel, the interior chamber must be fluidly connected to the fuel inlet port.<br><br>Defendant directly practices this limitation, literally and/or through the doctrine of equivalents, because the injection valve has a valve housing that comprises an interior chamber that is fluidly connected (green dashed line) with the fuel inlet port.<br><br> 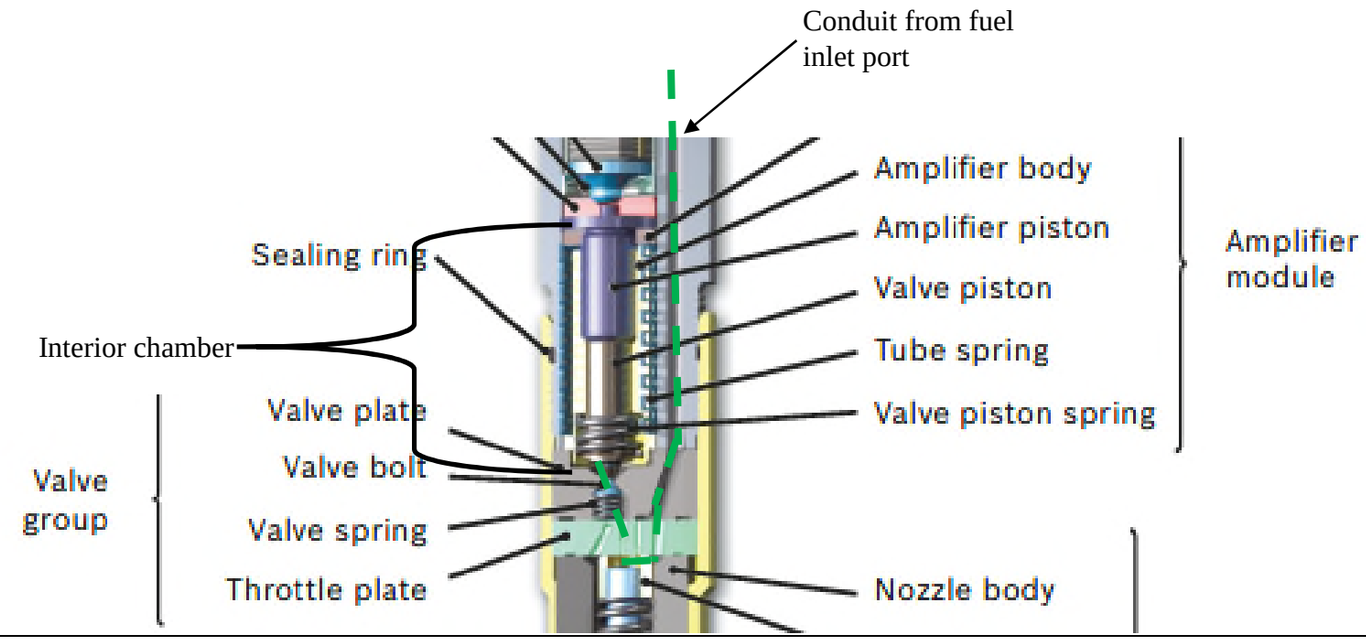 |

| | |
|---|---|
| 1[D] a nozzle comprising a nozzle orifice providing a fluid passage from said interior chamber to said combustion chamber; | The valve housing of Defendant's injection valve includes a nozzle with a nozzle orifice for injecting fuel into the combustion chamber. The interior chamber is filled with the same fuel that is injected into the combustion chamber. Therefore, a fluid passage exists between the interior chamber and the combustion chamber that permits the interior chamber and the combustion chamber to be in fluid communication with one another.<br><br>Defendant directly practices this limitation, literally and/or through the doctrine of equivalents, because the nozzle orifice provides a fluid passage (red dashed line) from the interior chamber to the combustion chamber.<br><br> 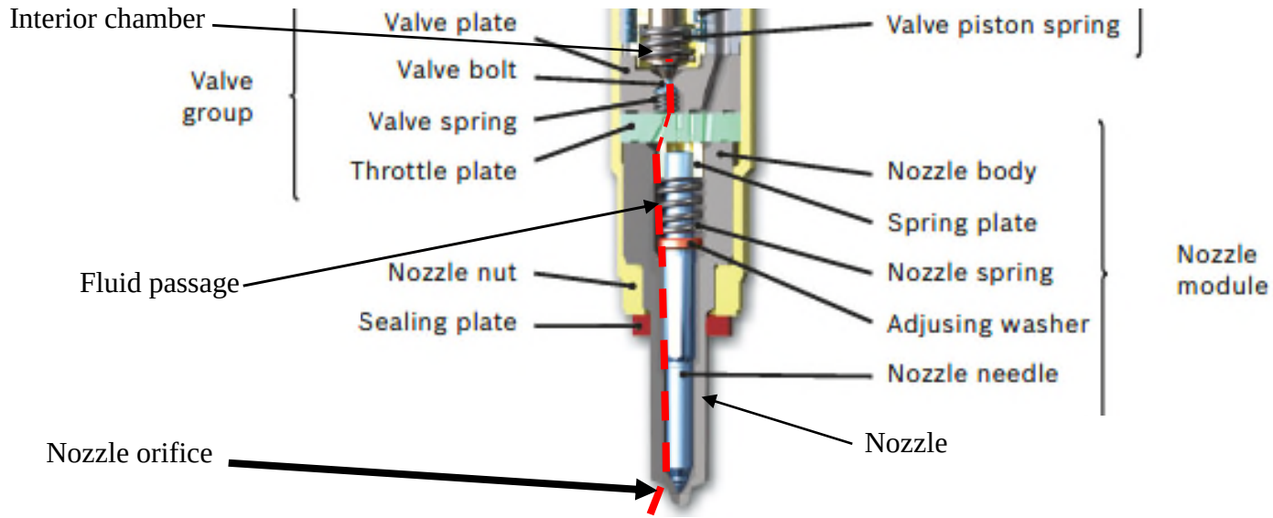 |

| | |
|---|---|
| 1[E] (b) a valve needle disposed within said valve housing wherein said valve needle is movable between a closed position at which a sealing end of said valve needle contacts a valve seat to fluidly seal said interior chamber from said nozzle orifice, and an open position at which said sealing end of said valve needle is spaced apart from said valve seat whereby said interior chamber is fluidly connected with said nozzle orifice, wherein valve needle lift equals the distance traveled by said sealing end away from said valve seat; | Defendant's injection valve includes a valve needle that seals against valve seat to fluidly isolate the interior chamber from the nozzle orifice. Valve needle is pushed downward to an open position where it is spaced apart from the valve seat to open a fluid path to fluidly connect the interior chamber with the nozzle orifice. The valve needle lift equals the distance traveled by the sealing end away from said valve seat<br><br>Defendant directly practices this limitation, literally and/or through the doctrine of equivalents, because the valve needle operates as claimed in this limitation.<br><br> 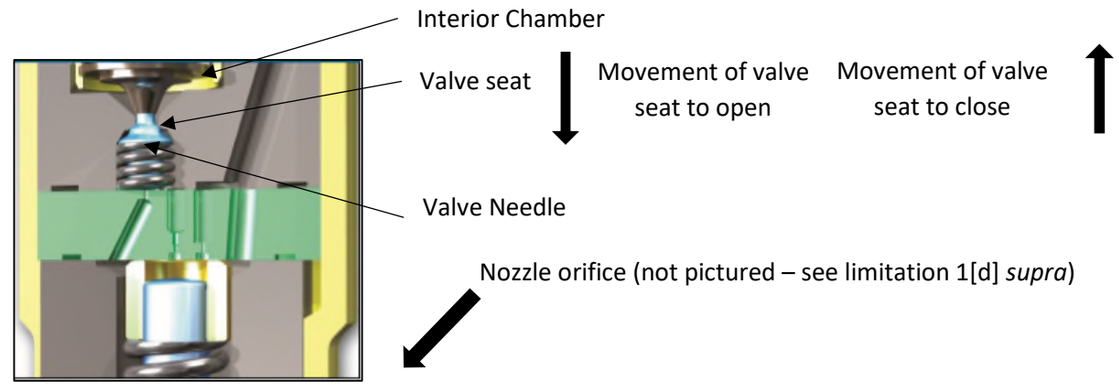 |

| | |
|---|---|
| 1[F] (c) a needle spring associated with said valve needle, wherein said needle spring applies a closing force to said valve needle for biasing said valve needle in said closed position; | Defendant's injection valve includes a needle spring that applies a closing force to the valve needle for biasing the valve needle to the closed position.<br><br>Defendant directly practices this limitation, literally and/or through the doctrine of equivalents, because the valve spring applies a closing force to bias the valve bolt in the closed position.<br><br> 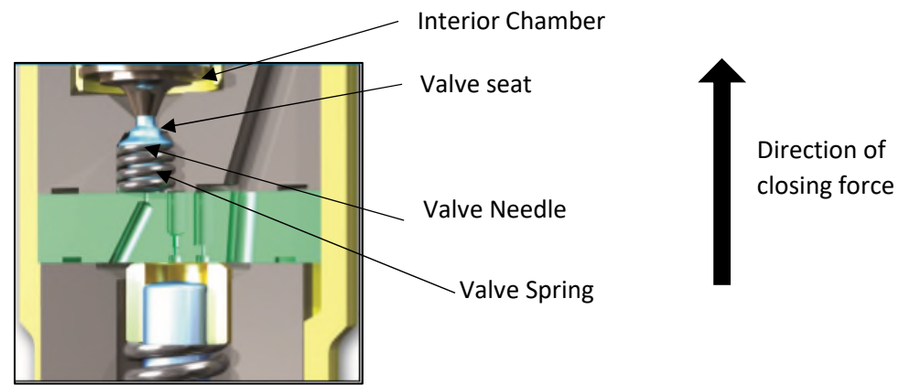 <br> |

| | |
|---|---|
| 1[G] (d) an actuator assembly associated with said valve needle, wherein said actuator assembly may be actuated to apply an opening force to said valve needle stronger than said closing force, for moving said valve needle to said open position; and | Defendant's injection valve includes an actuator assembly (actuator module) that applies an opening force to the valve needle (valve bolt) stronger than the closing force acting on the valve needle so as to move the valve needle to the open position.<br><br>Defendant directly practices this limitation, literally and/or through the doctrine of equivalents, because the actuator module applies an opening force to move the valve bolt to the open position.<br><br> 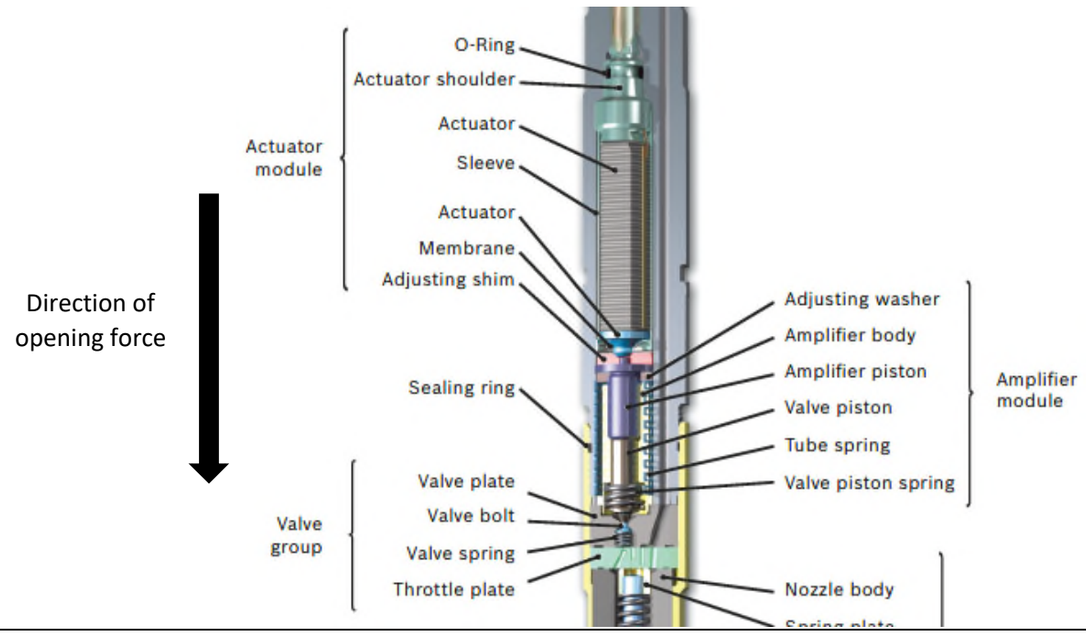 |

| | |
|---|---|
| 1[H] (e) a hydraulic link assembly comprising a passive hydraulic link having a hydraulic fluid thickness through which said opening and closing forces are transmitted, | Defendant's injection valve has a passive hydraulic link (amplifier module) with a hydraulic fluid thickness (between the amplifier piston and the valve piston) through which opening and closing forces are transmitted. The amplifier module is a passive hydraulic link because the hydraulic fluid within the amplifier module merely transmits the actuating forces from the actuator to the valve bolt but is not employed to generate an actuating force for actuating the valve. The actuating force is transmitted through the thickness of hydraulic fluid, which behaves substantially as a solid and is substantially constant during actuation. When the actuator is not activated, the thickness of hydraulic fluid is adjustable in response to changes in dimensional relationships between components.<br><br>Defendant directly practices this limitation, literally and/or through the doctrine of equivalents, because the amplifier module comprises a passive hydraulic link through which opening and closing forces are transmitted across a hydraulic fluid thickness that acts substantially as a solid and has a substantially constant thickness during actuation but is adjustable in response to changes in dimensional relationships between components when not activated.<br><br> 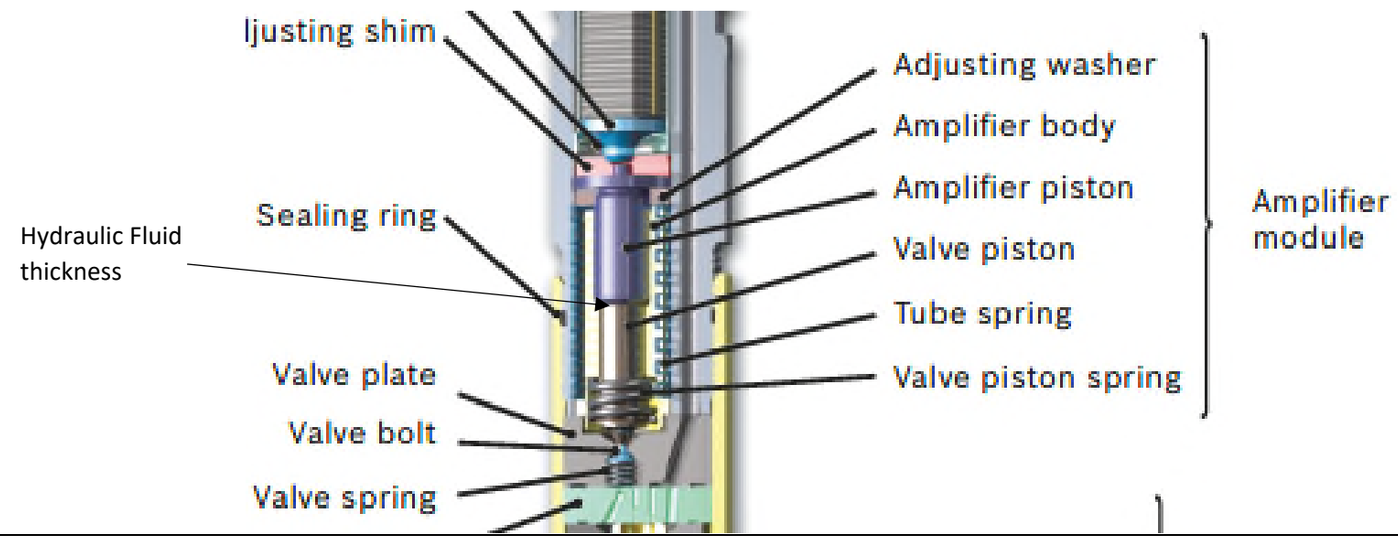 <br> |
| 1[I] whereby said hydraulic fluid acts substantially as a solid with said thickness being substantially constant while said actuator assembly is actuated and | |
| 1[K] wherein said thickness of said hydraulic link is adjustable while said actuator assembly is not actuated in response to changes in the dimensional relationship between components of said injection valve to maintain a desired valve lift upon actuation of said actuator assembly. | |

| | |
|---|---|
| 2. The injection valve of claim 1 wherein said thickness of said hydraulic link is auto-adjustable while said actuator assembly is not activated in response to changes in said dimensional relationship caused by differential thermal expansion. | Defendant's injection valve has a thickness of the hydraulic link that is auto-adjustable in response to changes in the dimensional relationship caused by differential thermal expansion when the actuator assembly is not activated. This is done through the tube spring and/or valve piston spring.<br><br>Defendant directly practices this limitation, literally and/or through the doctrine of equivalents, because the hydraulic link is auto-adjustable in response to differential thermal expansion.<br><br> 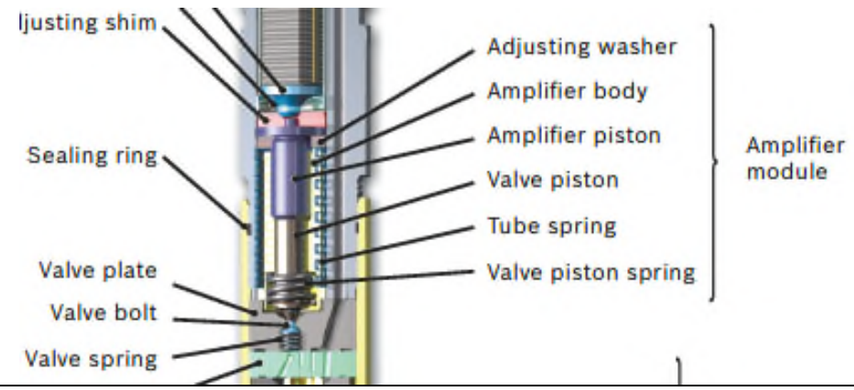 |
| 3. The injection valve of claim 2 wherein said thickness of said hydraulic link is auto-adjustable while said actuator assembly is not activated in response to changes in said dimensional relationship caused by wear to components of said injection valve. | Defendant's injection valve has a thickness of the hydraulic link that is auto-adjustable in response to changes in the dimensional relationship caused by wear to components when the actuator assembly is not activated. This is done through tube spring and/or valve piston spring.<br><br>Defendant directly practices this limitation, literally and/or through the doctrine of equivalents, because the hydraulic link is auto-adjustable in response to wear.<br><br> 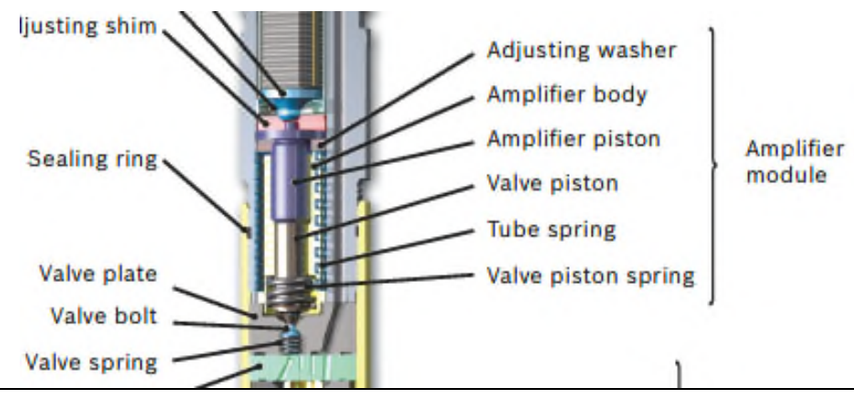 |

| | |
|---|---|
| 6. The injection valve of claim 1 wherein said actuator assembly comprises a magnetostrictive member or a piezoelectric stack. | Defendant directly practices this limitation, literally and/or through the doctrine of equivalents, because the Defendant's injection valve includes an actuator assembly comprising a piezoelectric stack.<br> 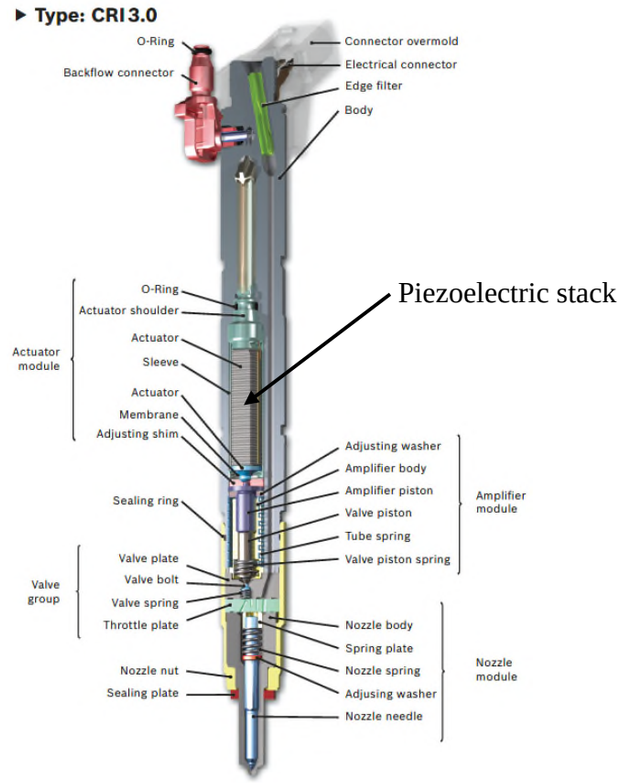 <br> |
| 11. The injection valve of claim 6 wherein when said actuator assembly is controllable to control said desired lift to between 10 and 100 percent of maximum lift. | Defendant's injection valves "enable flexible rate shaping" and "are suitable for selected and standardized country-specific fuel qualities." Defendant directly practices this limitation, literally and/or through the doctrine of equivalents, because the injector includes an actuator assembly that is controllable to control desired lift between 10 and 100 percent of maximum lift. |

| | |
|---|---|
| | Modular design for numerous applications<br> <br>Piezo injector CRI3-27<br> <br>Piezo injector CRI3-27 with Needle Closing Control<br>▸ The high-performance piezo injectors allow up to ten individual injections per injection cycle for quiet and highly efficient combustion.<br>▸ The Bosch technology is proven millions of times over.<br>▸ The injectors are compatible across all pressure levels and enable a flexible rate shaping.<br>▸ Thanks to a robust design the injectors are suitable for selected and standardized country-specific fuel qualities. |
| 12. The injection valve of claim 11 wherein said lift is controllable by controlling the electric current directed or voltage applied to said respective magnetostrictive or piezoelectric actuator assembly. | Piezoelectric actuators are controllable through controlling the voltage applied to the actuator. Because the lift of the valve needle is determined by the actuation of the piezoelectric actuator, the voltage applied to the actuator controls the lift of the valve needle.<br><br>Defendant directly practices this limitation, literally and/or through the doctrine of equivalents, because the lift is controllable by controlling the voltage applied to the piezoelectric actuator assembly. |
| 14. The injection valve of claim 6 wherein said valve needle is controllable to move between said open and closed positions in less than about 200 microseconds. | Defendant's injection valve "allow up to ten individual injections per injection cycle" and enable "extremely short injection intervals." On information and belief, Plaintiff alleges that the valve needle is moved between the open and closed position in less than about 200 microseconds.<br><br>Defendant directly practices this limitation, literally and/or through the doctrine of equivalents, because the valve needle is controllable to move between the open and closed positions in less than about 200 microseconds. |
| 15. The injection valve of claim 6 further comprising a compression spring member for applying a compressive force to said magnetostrictive or piezoelectric member. | Defendant directly practices this limitation, literally and/or through the doctrine of equivalents, because Defendant's injection valve includes a tube spring that applies a compressive force to the piezoelectric member of the actuator assembly. |

| | |
|---|---|
| | 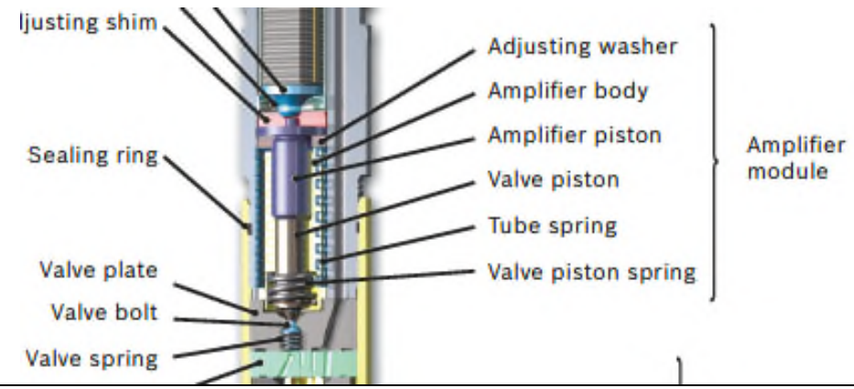 |
| 18. The injection valve of claim 1 wherein said fuel is injected into said combustion chamber at a pressure greater than about 2000 psi (about 13.8 MPa). | Defendant directly practices this limitation, literally and/or through the doctrine of equivalents, because Defendant's injection valve operates at up to 2,700 bar, which is greater than 2000 psi.<br> |

| | |
|---|---|
| 19. The injection valve of claim 1 wherein said valve housing comprises a plurality of parts which are joined with each other to provide a fluidly sealed body. | Defendant's housing contains a plurality of parts, e.g., at least a first portion and a second portion which are joined with each other. Those parts house at least a sealing ring and a sealing plate to create a fluidly sealed body. Defendant directly practices this limitation, literally and/or through the doctrine of equivalents, because the valve housing is formed from a plurality of parts joined to form a fluidly sealed body.<br> 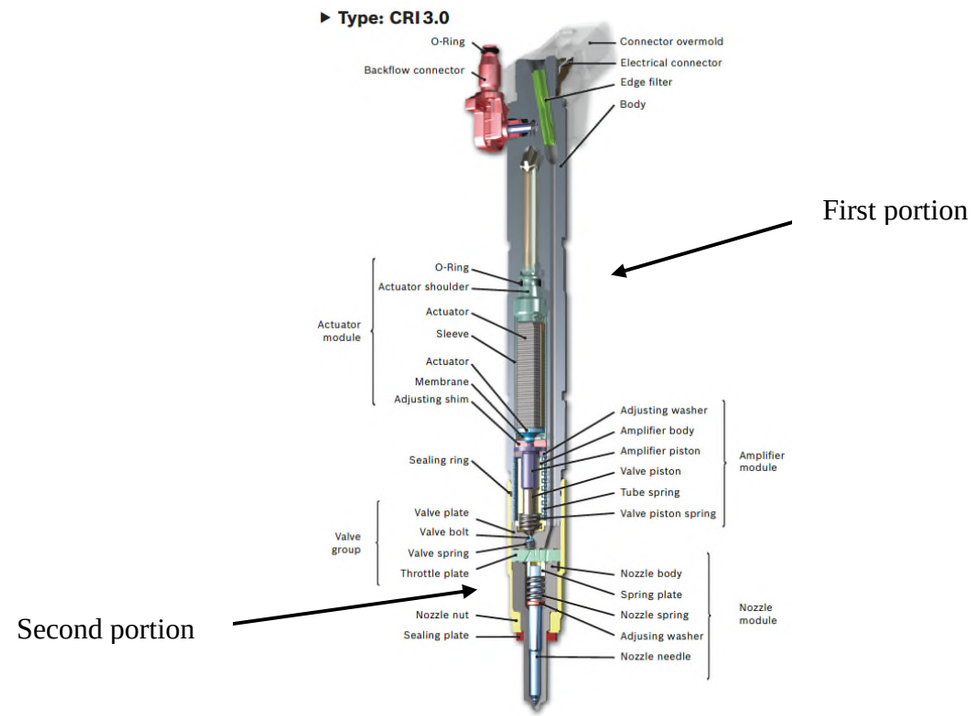 <br> |
| 20. The injection valve of claim 1 wherein said valve housing, said valve needle, and said actuator assembly, are selected from materials with similar thermal expansion coefficients to reduce changes in the dimensional relationship between said components caused by changes in temperature. | In order to minimize dimensional variations from changes in temperature expected in internal combustion engine applications, a reasonable engineer would select materials with similar thermal expansion coefficients for use in an injection valve. On information and belief, Plaintiff alleges that the valve housing, valve needle and actuator assembly are selected from materials with similar thermal expansion coefficients. |

Exhibit B

**P.R. 3-1 Preliminary Infringement Contentions for U.S. Patent No. 6,575,138**

The figures shown in the Accused Products column are taken from the materials found in production numbers: **WP-FORD001566 – WP-FORD001587.**

| 138 Patent Claim Element | Accused Products |
|---|---|
| 1[A]. An injection valve for injecting fuel into a combustion chamber of an internal combustion engine, said injection valve comprising: | Defendant made, offered for sale, sold, and upon information and belief imported F-Series and Super Duty trucks equipped with a 6.7L Power Stroke V8 Diesel engine utilizing 8 injection valves having part number CN6037/6038 (9H529), F-150 trucks with a 3.0L Power Stroke V6 Diesel engine utilizing 6 injection valves having part number CN6021/6022 (9H529), and Transit Vans equipped with a 3.2L Diesel engine utilizing 5 injection valves having part number CN6018 (9E527). Defendant also offered for sale, sold, and upon information and belief imported injection valves having part numbers CN6021/6022 (9H529), CN6021/6022 (9H529), and CN6018 (9E527) as individual spare parts or as part of spare part assemblies. On information and belief, the injection valve identified as part numbers CN6021/6022 (9H529), CN6021/6022 (9H529), and CN6018 (9E527) are versions of the Bosch CRI 3.0 Piezo Injector such as those having Bosch part number 0445117043 and 0445117078. *See* **WP-FORD001566 – WP-FORD001587.**<br><br>To the extent that the preamble is construed as a limitation, Defendant directly practices this limitation, literally and/or through the doctrine of equivalents, because the injection valve is used to inject fuel into a combustion chamber of an internal combustion engine.<br><br> <br>Piezo injector CRI3-27<br><br> <br>Piezo injector CRI3-27 with Needle Closing Control<br><br> 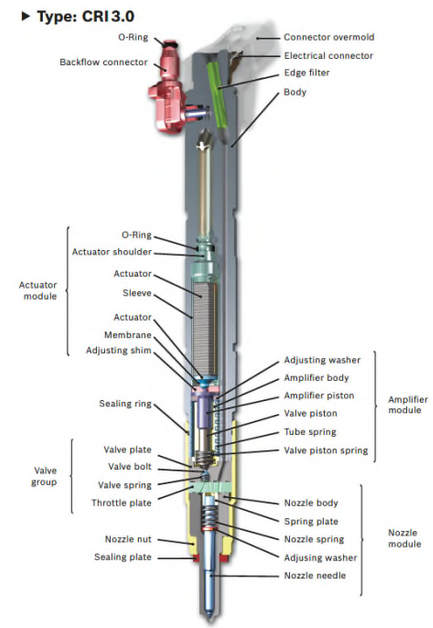 <br> |



13355136

| | |
|---|---|
| 1[B]- (a) a valve housing comprising:<br>a fuel inlet port; | Fuel is supplied to the injection valve through a threaded port on the upper end of the housing. Defendant directly practices this limitation, literally and/or through the doctrine of equivalents, because the injection valve has a valve housing comprising a fuel inlet port.<br> 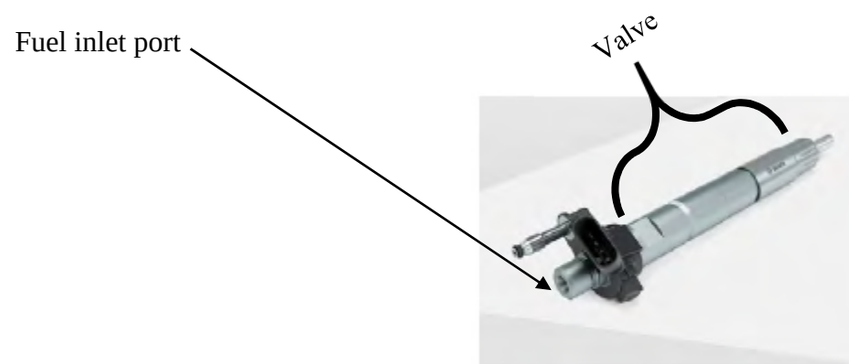 <br><br>Piezo injector CRI3-27 with Needle Closing Control |

| | |
|---|---|
| 1[C] an interior chamber fluidly connected to said fuel inlet port; and | The amplifier module is disposed with an interior chamber that is filled with the fuel that is supplied to the valve housing via the fuel inlet port. The interior chamber is generally bounded by the upper end of the valve plate at the lower end of the actuator. Because the interior chamber is filled with fuel, the interior chamber must be fluidly connected to the fuel inlet port.<br><br>Defendant directly practices this limitation, literally and/or through the doctrine of equivalents, because the injection valve has a valve housing that comprises an interior chamber that is fluidly connected (green dashed line) with the fuel inlet port.<br><br> 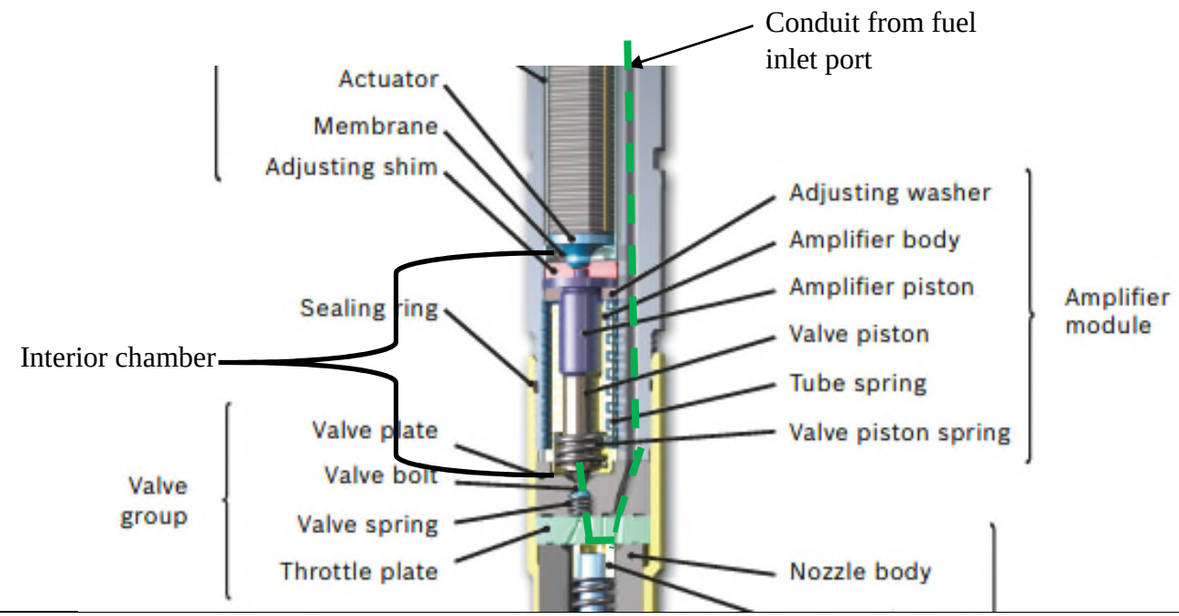 |

| | |
|---|---|
| 1[D] a valve seat for cooperating with a valve member to seal said interior chamber from said combustion chamber when said injection valve is closed; | Defendant directly practices this limitation, literally and/or through the doctrine of equivalents, because Defendant's injection valve includes a valve member that seals against valve seat to fluidly isolate the interior chamber from the combustion chamber.<br> 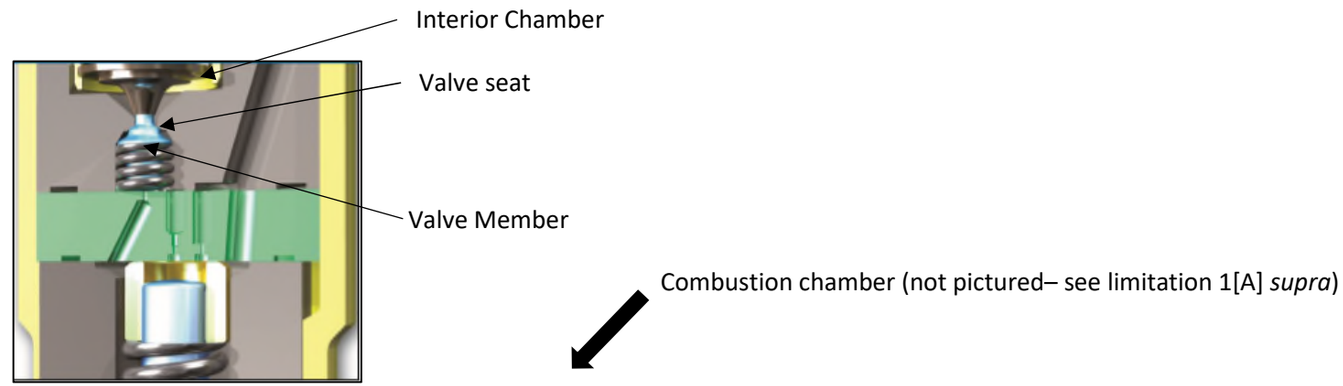 <br> |
| 1[E] (b) said valve member having one end disposed within said valve housing and an opposite end extendable from said valve seat toward said combustion chamber, wherein said valve member comprises a sealing surface that fluidly seals against said valve seat when said injection valve is closed and that is liftable away from said valve seat when said injection valve is open; | Defendant directly practices this limitation, literally and/or through the doctrine of equivalents, because Defendant's injection valve includes a valve member with one end disposed within the valve housing, an opposite end extendable toward the combustion chamber, and a sealing surface that fluidly seals against the valve seat when the injection valve is closed and that is liftable away from said valve seat when said injection valve is open.<br> 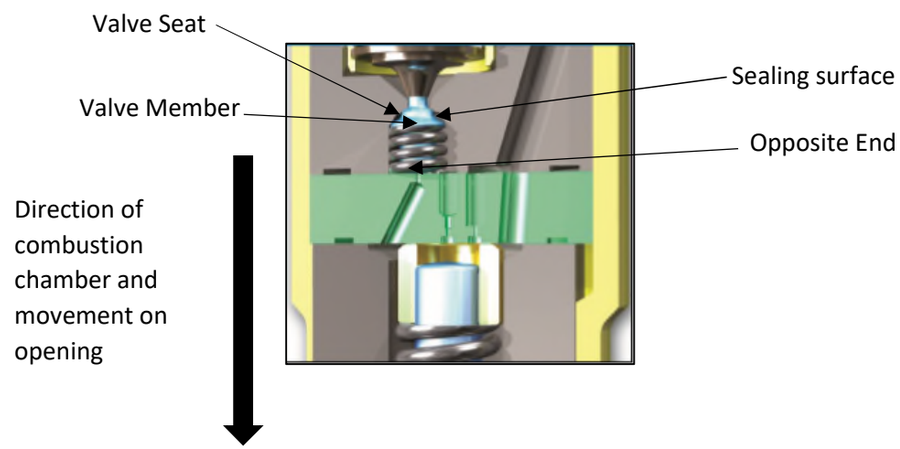 <br> |

| | |
|---|---|
| 1[F] (c) a biasing mechanism associated with said valve member, said biasing mechanism applying a closing force to said valve member when said valve member is in said closed position; | Defendant directly practices this limitation, literally and/or through the doctrine of equivalents, because Defendant's injection valve includes a biasing mechanism that applies a closing force to the valve member.<br> 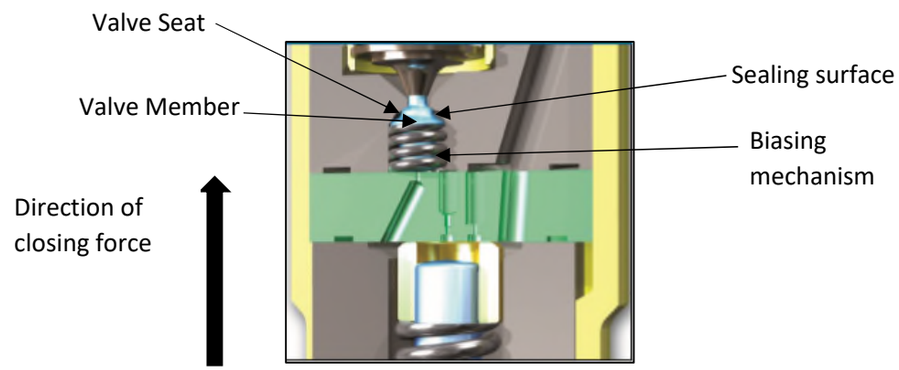 <br> |

| | |
|---|---|
| 1[G] (d) an actuator assembly associated with said valve member, wherein said actuator assembly may be actuated to apply an opening force to said valve member stronger than said closing force, for moving said valve member to said open position; and | Defendant's injection valve includes an actuator assembly (actuator module) that applies an opening force to the valve member (valve bolt) stronger than the closing force acting on the valve needle so as to move the valve needle to the open position.<br><br>Defendant directly practices this limitation, literally and/or through the doctrine of equivalents, because the actuator module applies an opening force to move the valve bolt to the open position.<br><br> 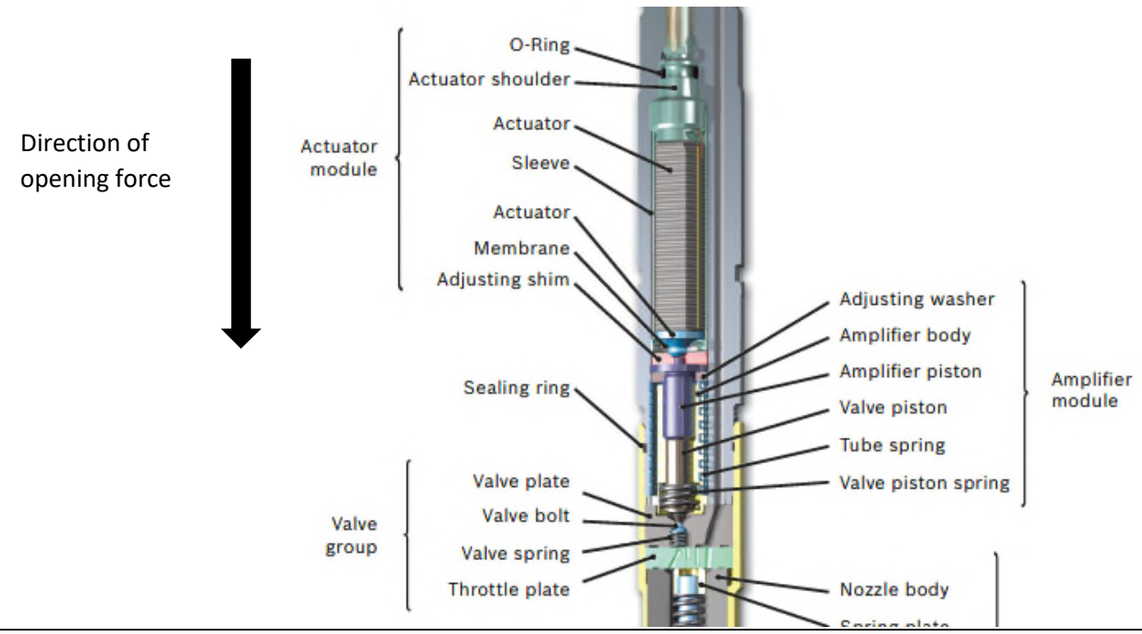 |

| | |
|---|---|
| 1[H] (e) a hydraulic link assembly comprising a passive hydraulic link having a hydraulic fluid thickness through which said opening and closing forces are transmitted, | Defendant's injection valve has a passive hydraulic link (amplifier module) with a hydraulic fluid thickness (between the amplifier piston and the valve piston) through which opening and closing forces are transmitted. The amplifier module is a passive hydraulic link because the hydraulic fluid within the amplifier module merely transmits the actuating forces from the actuator to the valve bolt but is not employed to generate an actuating force for actuating the valve. The actuating force is transmitted through the thickness of hydraulic fluid, which behaves substantially as a solid and is substantially constant during actuation. When the actuator is not activated, the thickness of hydraulic fluid is adjustable in response to changes in dimensional relationships between components.<br><br>Defendant directly practices this limitation, literally and/or through the doctrine of equivalents, because the amplifier module comprises a passive hydraulic link through which opening and closing forces are transmitted across a hydraulic fluid thickness that acts substantially as a solid and has a substantially constant thickness during actuation but is adjustable in response to changes in dimensional relationships between components when not activated.<br><br> 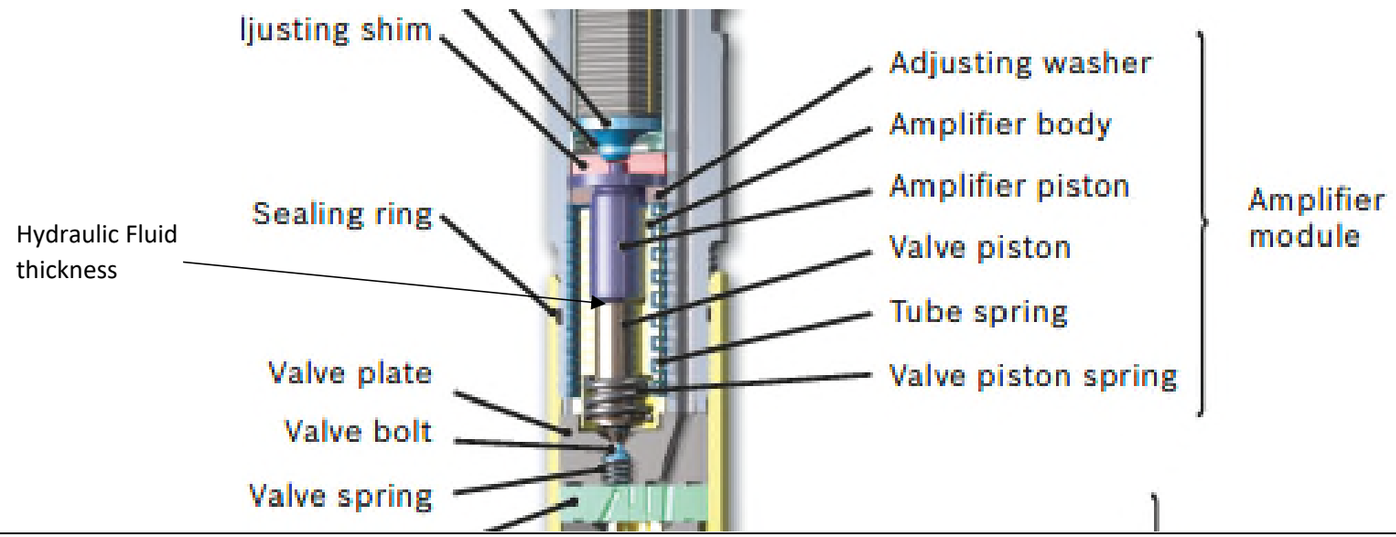 <br> |
| 1[I] whereby said hydraulic fluid acts substantially as a solid with said thickness being substantially constant while said actuator assembly is actuated and wherein | |
| 1[J] said thickness of said hydraulic link is adjustable while said actuator assembly is not actuated in response to changes in the dimensional relationship between components of said injection valve to maintain a desired valve lift upon actuation of said actuator assembly. | |

| | |
|---|---|
| 2. The injection valve of claim 1 wherein said thickness of said hydraulic link is auto-adjustable while said actuator assembly is not actuated in response to changes in said dimensional relationship caused by differential thermal expansion. | Defendant's injection valve has a thickness of the hydraulic link that is auto-adjustable in response to changes in the dimensional relationship caused by differential thermal expansion when the actuator assembly is not activated. This is done through the tube spring and/or valve piston spring.<br><br>Defendant directly practices this limitation, literally and/or through the doctrine of equivalents, because the hydraulic link is auto-adjustable in response to differential thermal expansion.<br><br> 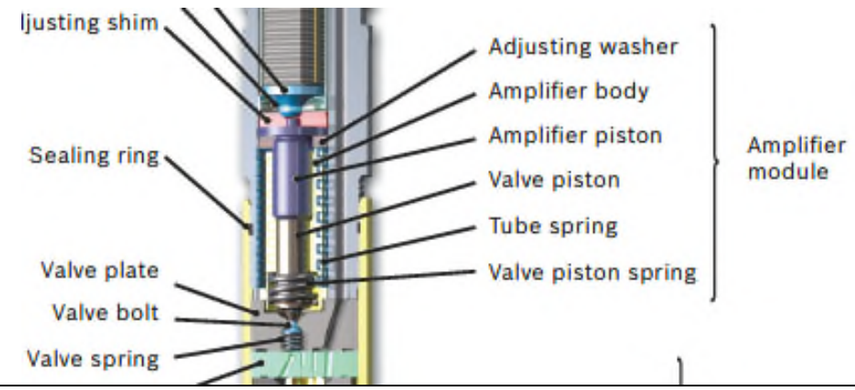 |
| 3. The injection valve of claim 2 wherein said thickness of said hydraulic link is auto-adjustable while said actuator assembly is not actuated in response to changes in said dimensional relationship caused by wear to components of said injection valve. | Defendant's injection valve has a thickness of the hydraulic link that is auto-adjustable in response to changes in the dimensional relationship caused by wear to components when the actuator assembly is not activated. This is done through tube spring and/or valve piston spring.<br><br>Defendant directly practices this limitation, literally and/or through the doctrine of equivalents, because the hydraulic link is auto-adjustable in response to wear.<br><br> 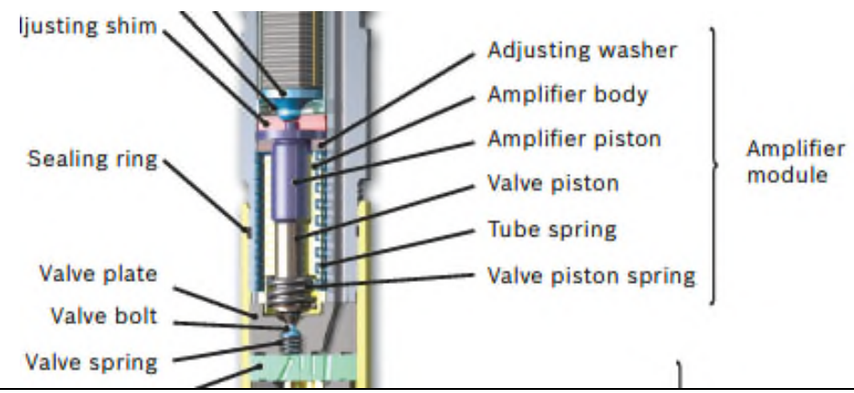 |

| | |
|---|---|
| 6. The injection valve of claim 1 wherein said actuator assembly comprises a dimensionally responsive member. | The actuator of Defendant's injection valve includes a piezoelectric stack that expands in response to applied voltage. Therefore, Defendant directly practices this limitation, literally and/or through the doctrine of equivalents, because the actuator assembly includes a dimensionally responsive member in the form of a piezoelectric stack.<br> 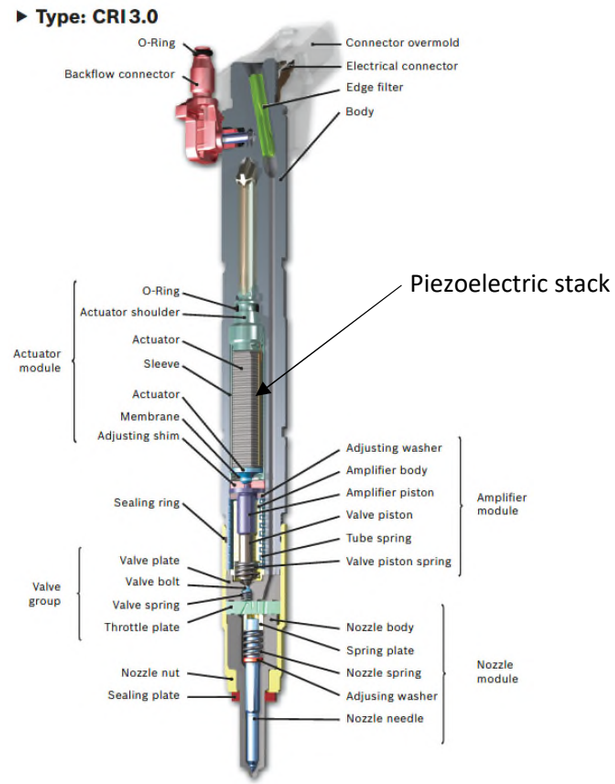 <br> |
| 13. The injection valve of claim 6 wherein said dimensionally responsive member is formed from a piezoelectric material. | See Claim 6. |

| | |
|---|---|
| 14. The injection valve of claim 6 further comprising a compression spring member for applying a compressive force to said dimensionally responsive member. | Defendant directly practices this limitation, literally and/or through the doctrine of equivalents, because Defendant's injection valve includes a tube spring that applies a compressive force to the dimensionally responsive member of the actuator assembly. 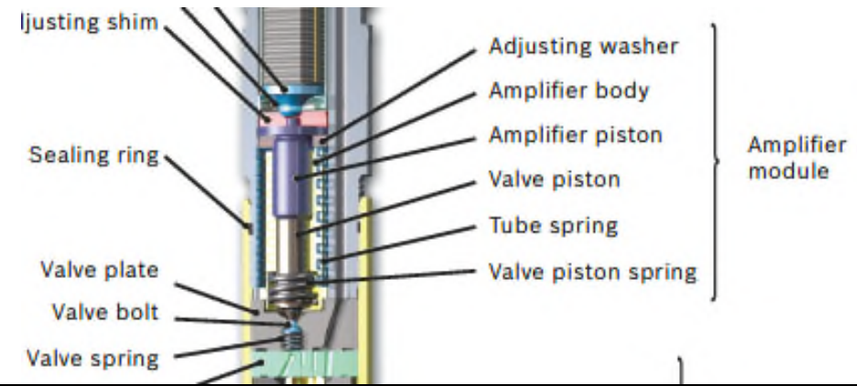  |

| | |
|---|---|
| 17. The injection valve of claim 6 wherein said actuator assembly is controllable to maintain said desired lift between 10 and 100 percent of maximum lift. | Defendant's injection valves "enable flexible rate shaping" and "are suitable for selected and standardized country-specific fuel qualities." Defendant directly practices this limitation, literally and/or through the doctrine of equivalents, because the injector includes an actuator assembly that is controllable to control desired lift between 10 and 100 percent of maximum lift.<br><br>Modular design for numerous applications<br><br> <br>Piezo injector CRI3-27<br><br> <br>Piezo injector CRI3-27 with Needle Closing Control<br><br>▸ The high-performance piezo injectors allow up to ten individual injections per injection cycle for quiet and highly efficient combustion.<br>▸ The Bosch technology is proven millions of times over.<br>▸ The injectors are compatible across all pressure levels and enable a flexible rate shaping.<br>▸ Thanks to a robust design the injectors are suitable for selected and standardized country-specific fuel qualities. |
| 18. The injection valve of claim 17 wherein said lift is controllable by varying at least one of the electric current, the electric voltage and the magnetic field imposed upon said dimensionally responsive member. | Piezoelectric actuators are controllable through controlling the voltage applied to the actuator. Because the lift of the valve needle is determined by the actuation of the piezoelectric actuator, the voltage applied to the actuator controls the lift of the valve needle.<br><br>Defendant directly practices this limitation, literally and/or through the doctrine of equivalents, because the lift is controllable by controlling the voltage applied to the piezoelectric actuator assembly. |
| 19. The injection valve of claim 6 wherein said valve member is controllable such that said valve member moves between said open and closed positions in less than about 200 microseconds. | Defendant's injection valve "allow[s] up to ten individual injections per injection cycle" and enables "extremely short injection intervals." On information and belief, Plaintiff alleges that the valve needle is moved between the open and closed position in less than about 200 microseconds.<br><br>Defendant directly practices this limitation, literally and/or through the doctrine of equivalents, because the valve needle is controllable to move between the open and closed positions in less than about 200 microseconds. |

| | |
|---|---|
| 20. The injection valve of claim 6 further comprising a biasing mechanism for applying a compressive force to said dimensionally responsive member. | See Claim 14. |
| 21. The injection valve of claim 1 wherein said biasing mechanism comprises a spring. | See Claim 14. |
| 26. The injection valve of claim 1 wherein said fuel is injected into said combustion chamber at a pressure greater than about 2000 psi (about 13.8 Mpa). | Defendant directly practices this limitation, literally and/or through the doctrine of equivalents, because Defendant's injection valve operates at up to 2,700 bar, which is greater than 2000 psi.<br> <br> |

| | |
|---|---|
| 27. The injection valve of claim 1 wherein said valve housing comprises a plurality of parts which are joined with each other to provide a fluidly sealed body | Defendant's housing contains a plurality of parts, e.g., at least a first portion and a second portion which are joined with each other. Those parts house at least a sealing ring and a sealing plate to create a fluidly sealed body. Defendant directly practices this limitation, literally and/or through the doctrine of equivalents, because the valve housing is formed from a plurality of parts joined to form a fluidly sealed body.<br> 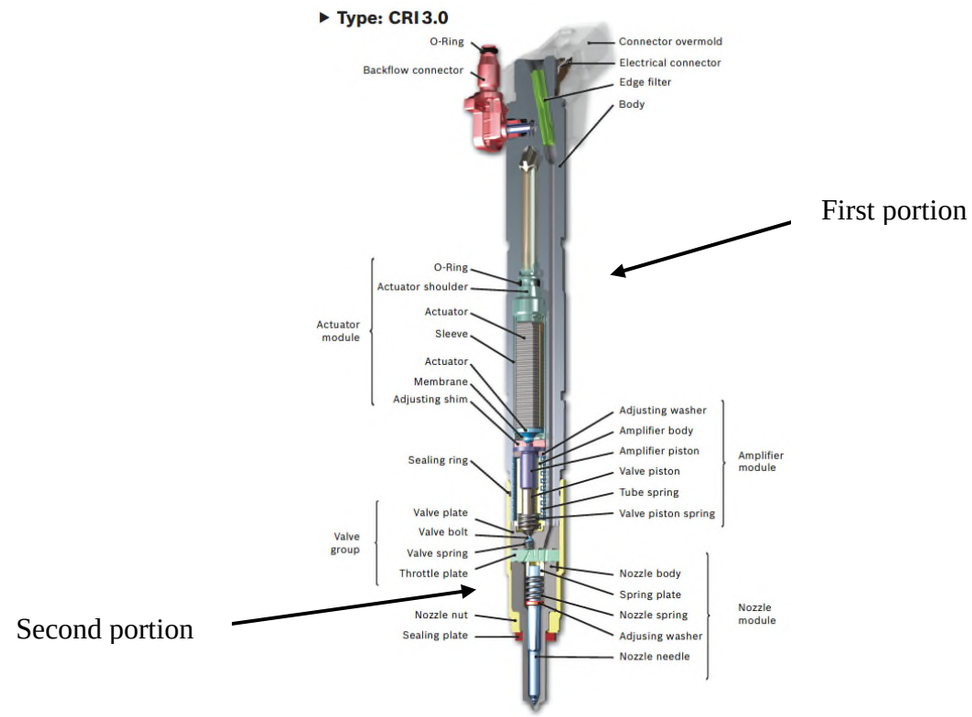 <br> |
| 28. The injection valve of claim 1 wherein said valve housing, said valve member and said actuator assembly are selected from materials having thermal expansion coefficients sufficiently compatible such that changes in the dimensional relationship between said components caused by changes in temperature are reduced. | In order to minimize dimensional variations from changes in temperature expected in internal combustion engine applications, a reasonable engineer would select materials with similar thermal expansion coefficients for use in an injection valve. On information and belief, Plaintiff alleges that the valve housing, valve needle and actuator assembly are selected from materials with similar thermal expansion coefficients. |