US005241944A

# United States Patent [19]

**Rappaport**

[11] **Patent Number: 5,241,944**

[45] **Date of Patent: Sep. 7, 1993**

[54] **TOY WEAPON FOR SHOOTING OUT WET PELLETS**

[76] Inventor: **Mark Rappaport**, 1900 Voorhees Ave., Unit C, Redondo Beach, Calif. 90278

[21] Appl. No.: **933,779**

[22] Filed: **Aug. 24, 1992**

[51] **Int. Cl.**[5] ..... **F41B 11/14**; F41B 7/08

[52] **U.S. Cl.** ..... **124/67**; 124/27; 222/79

[58] **Field of Search** ..... 221/135; 222/79; 124/16, 26, 27, 49, 50, 53.5, 59, 65–67, 56, 72

[56] **References Cited**

U.S. PATENT DOCUMENTS

| | | | |
|---|---|---|---|
| 3,112,109 | 11/1963 | Young | 124/26 X |
| 3,128,753 | 4/1964 | Politzer | 124/26 |
| 3,443,725 | 5/1969 | Lawhorn | 222/79 |
| 3,572,311 | 3/1971 | Baer | 124/50 X |
| 4,565,183 | 1/1986 | Smith | 124/26 |

*Primary Examiner*—Randolph A. Reese
*Assistant Examiner*—John Ricci
*Attorney, Agent, or Firm*—Michael Ebert

[57] **ABSTRACT**

A toy weapon adapted to shoot out sponge-like pellets impregnated with water. The weapon includes a launching chamber above which is vertically mounted a gravity-feed cartridge loaded with a stack of pellets. Also mounted above the chamber is a pump-operated water supply coupled to the cartridge whereby when the pump is actuated, water is then sprayed into the cartridge to impregnate the pellets therein. Projecting forwardly from the chamber is a gun barrel, while projecting rearwardly therefrom is a cylinder. Slidable within the cylinder is a spring-biased piston joined to a piston rod that extends from the rear end of the cylinder and terminates in a handle. When a player pulls out the handle, the piston is then at its retracted position and the spring is energized; and when the handle is released, the expanding spring then advances the piston toward the front end of the cylinder to produce a force which drives the pellet through the barrel from which it is discharged toward a target in line with the barrel.

**12 Claims, 4 Drawing Sheets**

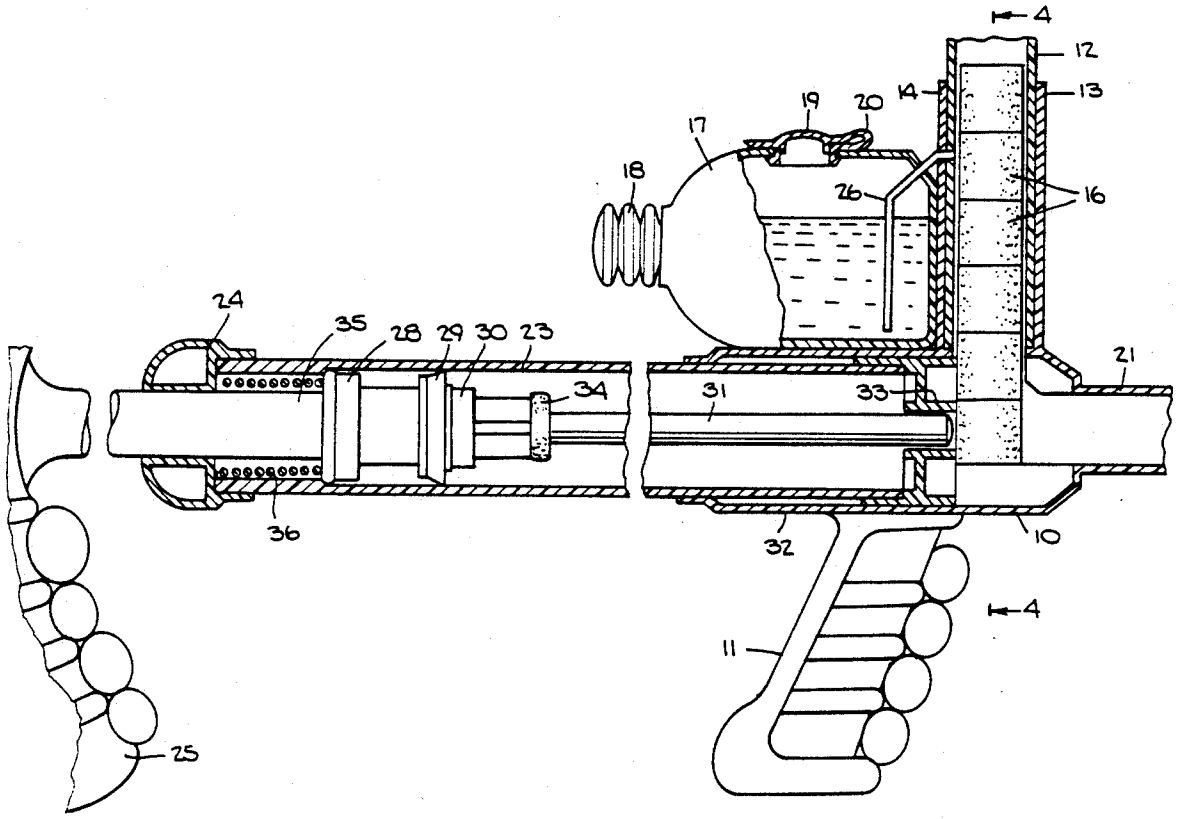

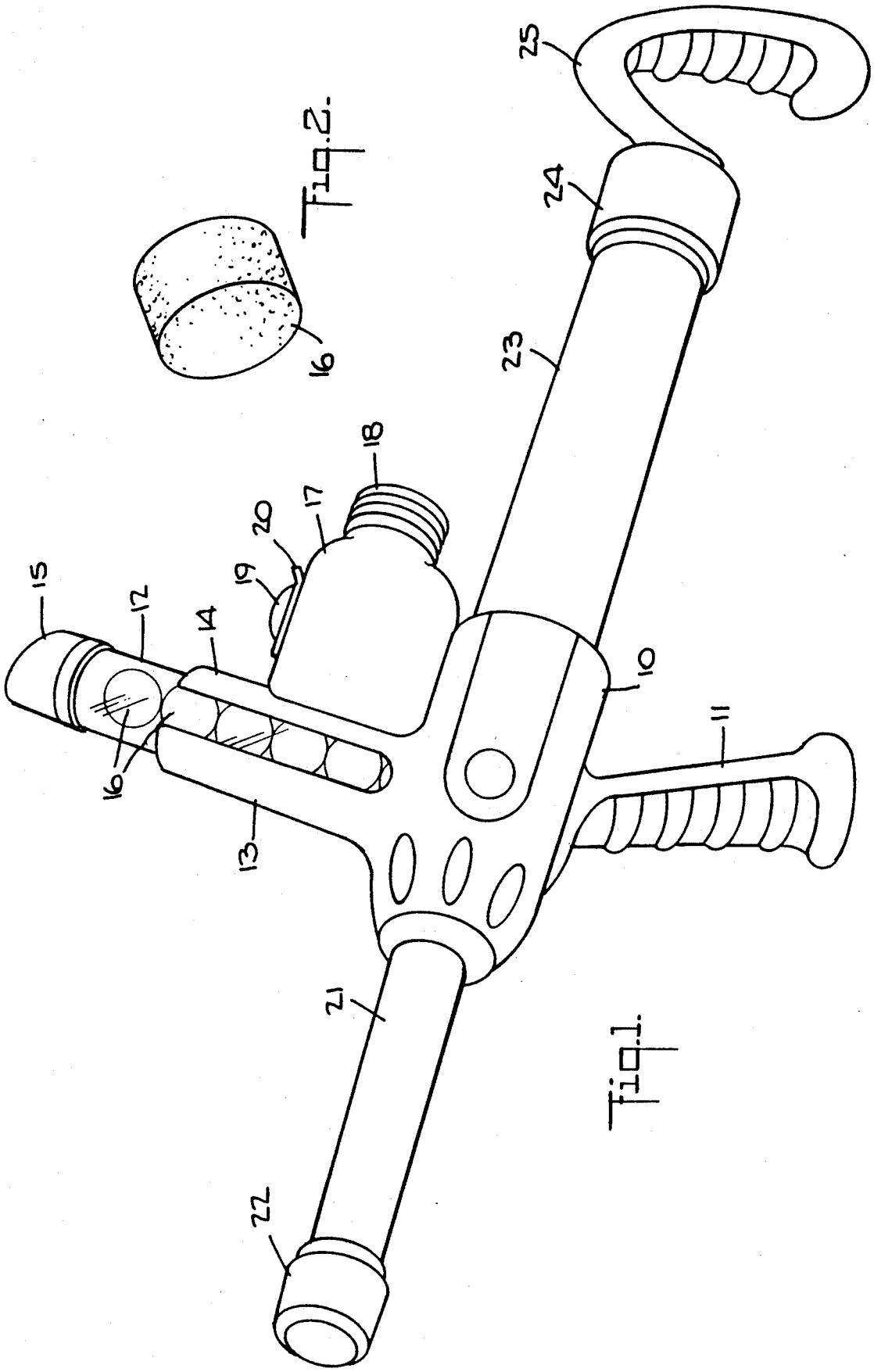
Fig. 2.
Fig. 1.
10
11
12
13
14
15
16
17
18
19
20
21
22
23
24
25

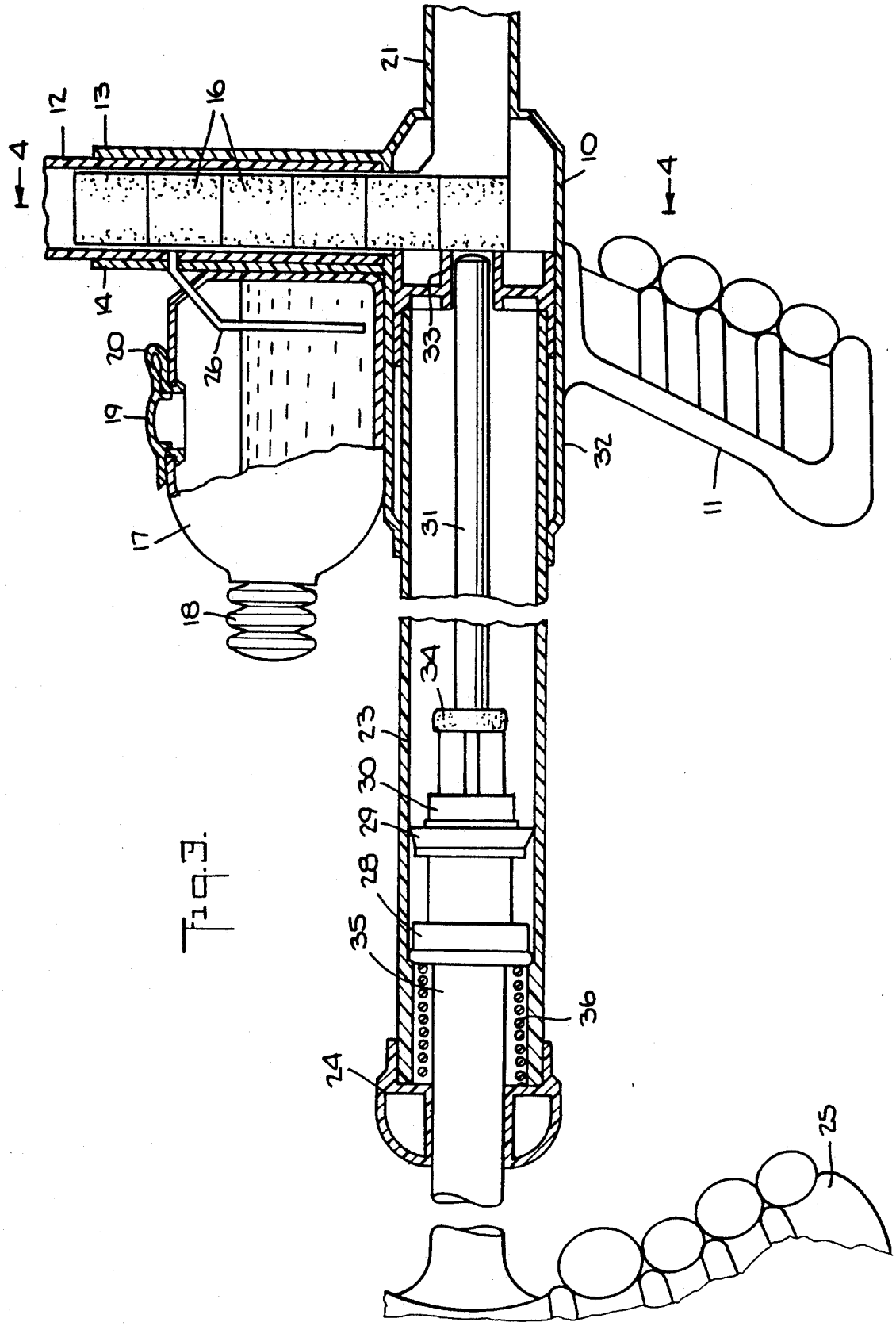
4
12
13
16
21
10
4
14
20
26
33
19
32
11
17
31
18
34
23
30
29
28
35
36
24
25

Fig. 3.

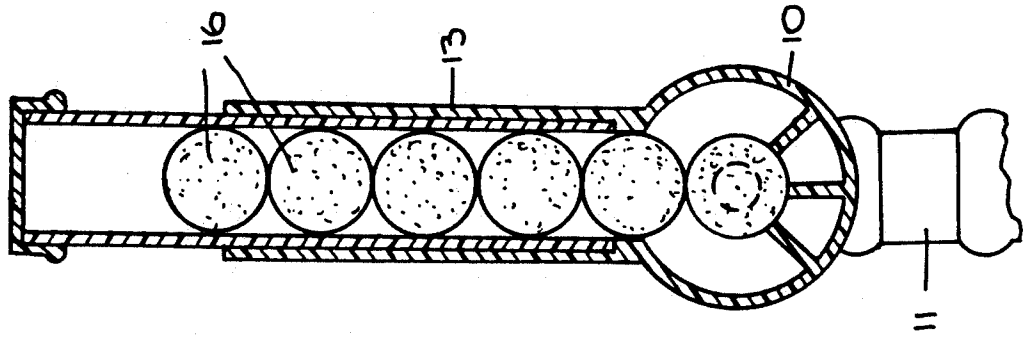


Fig. 4.

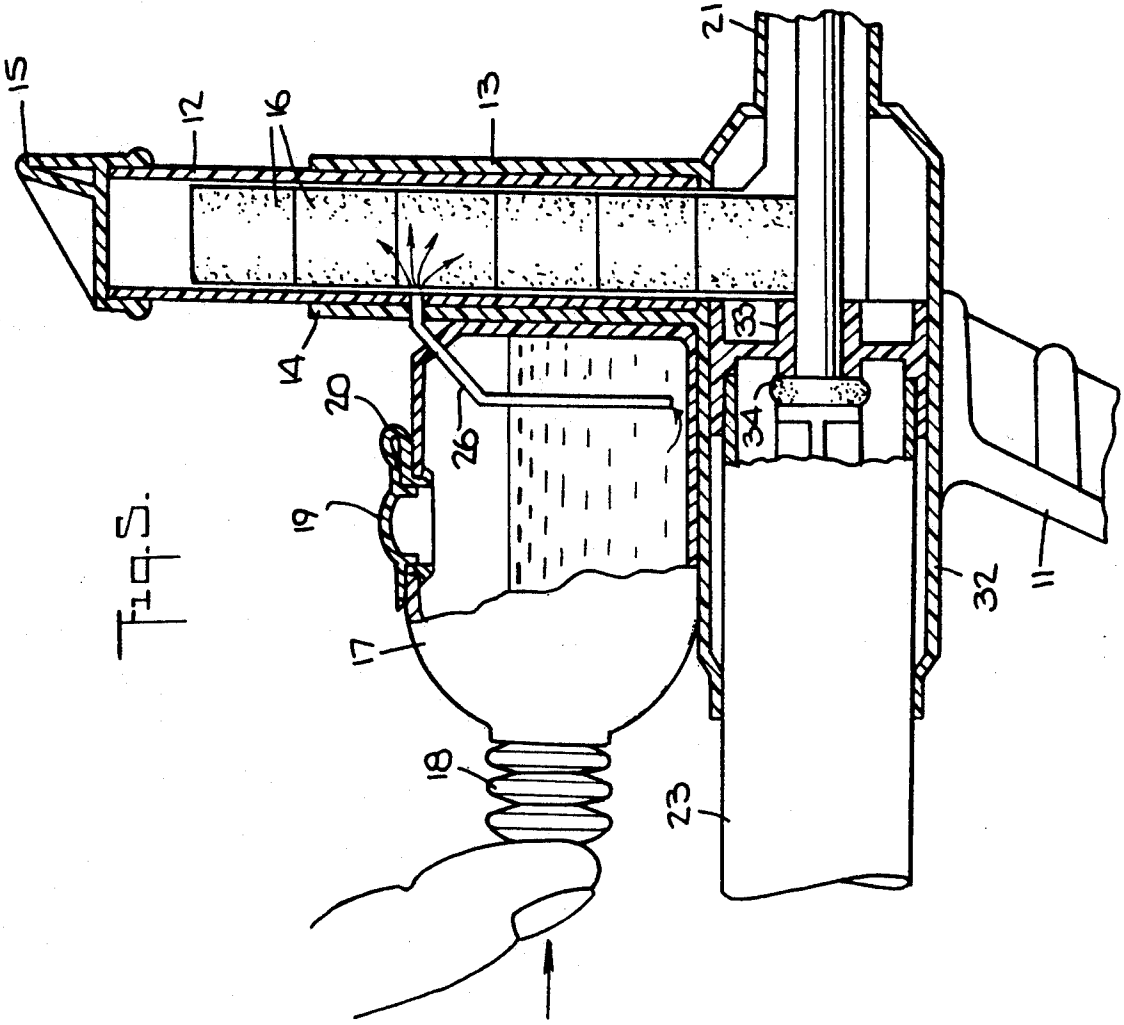


Fig. 5.

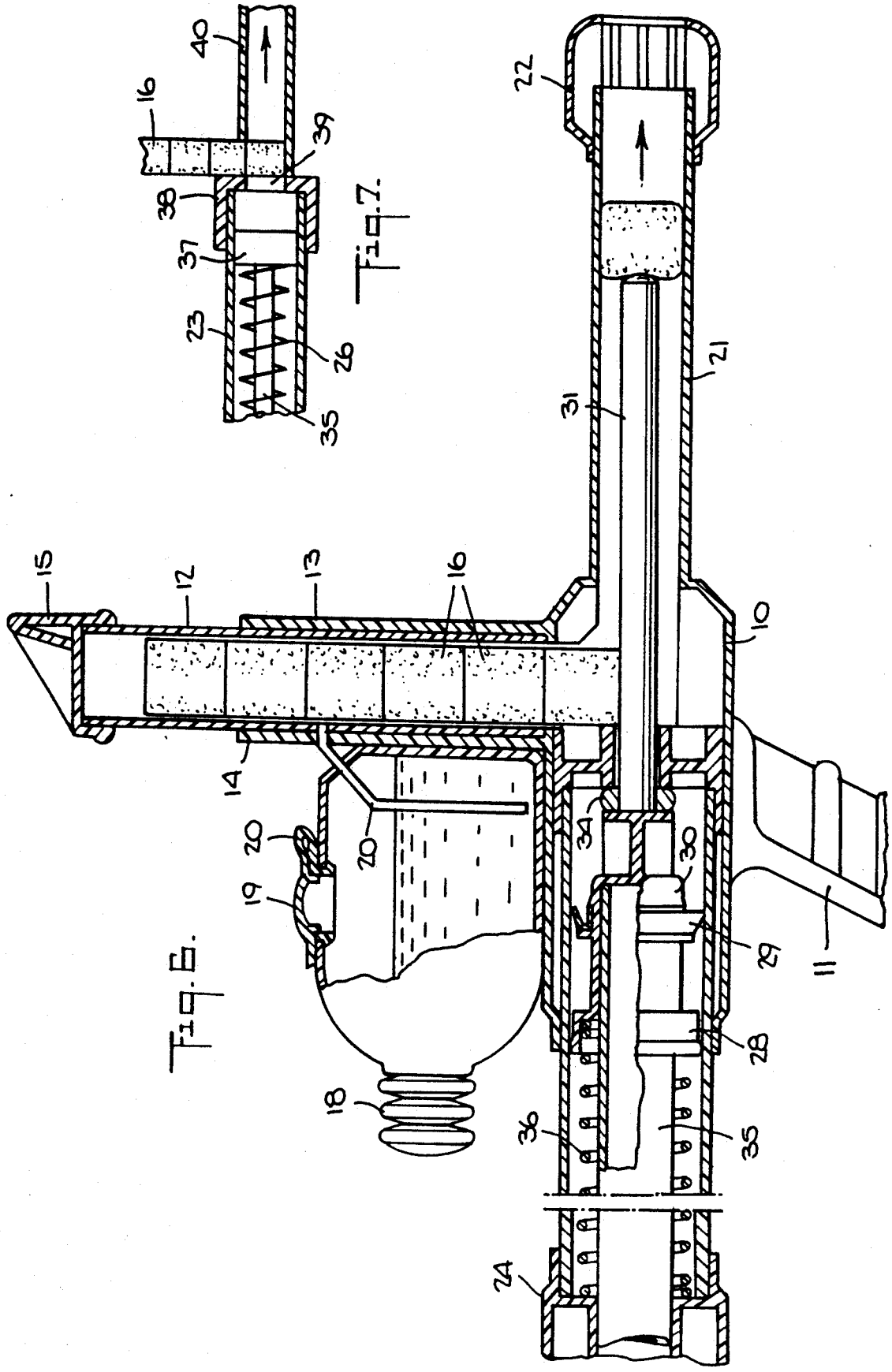
Fig. 7.
Fig. 8.
10
11
12
13
14
15
16
18
19
20
21
22
23
24
26
28
29
30
31
34
35
36
37
38
39
40

# TOY WEAPON FOR SHOOTING OUT WET PELLETS

## BACKGROUND OF INVENTION

1. Field of Invention

This invention relates generally to toy weapons, and more particularly to a toy gun adapted to shoot out innocuous soft pellets formed of flexible foam plastic material impregnated with water, so that an individual struck by the pellet is made wet thereby.

2. Status of Prior Art

Toy weapons which simulate actual weapons have always been popular with children, for children seek to emulate the activity of adults. However, those weapons which act to shoot out a missile capable of inflicting even slight injury on an individual struck by the missile are not acceptable; for in toys, safety is a primary consideration.

A toy water gun is innocuous and therefore acceptable, for the worst it can do is to wet an individual struck by a stream of water emitted from the gun. One such water gun is disclosed in the Johnson U.S. Pat. No. 4,591,071, in which the gun includes a pump to compress air for applying pressure to water contained in the gun, the water being supplied thereto by a bottle or reservoir attached to the gun. In this arrangement, a trigger-actuated flow control valve acts to control the flow of pressurized water through a nozzle in the barrel of the gun.

From a child's standpoint, a water gun, however elaborate its mechanism, does not simulate the action of a real weapon, for the toy does not shoot out a bullet or missile of some sort, but only a stream of water. Even if the water gun emits pulses of water rather than a continuous stream, this is not equivalent to shooting out a missile. On the other hand, a child who operates a water gun enjoys the fact that if he succeeds in striking a child who is also armed with a water gun and assumes the role of an enemy player, he has thereby humiliated his enemy and is therefore victorious.

A more realistic toy weapon is one that shoots out soft balls of flexible, foam plastic material. While a ball of this type is innocuous, it is functionally equivalent, as it were, to a cannonball or other missile which physically strikes another player and in doing so, scores a hit. A toy weapon of this type is disclosed in the Moorman U.S. Pat. No. 4,892,081, in which a soft ball is squeezed into a cavity at the front end of a gun barrel and is launched by compressed air produced by advancing a plunger toward the ball until the resultant air pressure is such as to overcome the hold of the cavity on the ball squeezed therein.

But in a toy weapon of the Moorman type, the missile shot out of the gun is a dry, soft ball; hence a child struck by this ball is not humiliated by this experience, for the ball simply bounces off the child. The term humiliate is used in the sense of a loss of dignity, and the reason children find water gun games exciting, even though they do not shoot out missiles, is that each player seeks, as best he can, to avoid being made wet and ashamed.

Hence those weapons which act to shoot out dry balls or other dry missiles are more realistic than those which merely wet a target; whereas those which wet a target afford a degree of play satisfaction that is lacking in toy weapons which shoot out dry missiles.

## SUMMARY OF INVENTION

In view of the foregoing, the main object of this invention is to provide a toy weapon adapted to shoot out soft and innocuous missiles or pellets that are impregnated with water, thereby combining the advantages of those toy weapons which fire dry missiles and those which only shoot out water.

More specifically, an object of this invention is to provide a toy gun which is loaded with a stack of pellets formed of flexible, foam plastic or other sponge-like material impregnated with water, the pellets being successively fired from the gun.

A significant advantage of the invention is that the toy gun need not be reloaded with a soft missile each time a missile is fired, for the gun includes a cartridge loaded with a stack of soft, wet missiles; and when a missile is fired from a launching chamber, another missile drops into the chamber in readiness to be fired.

Also an object of this invention is to provide a toy gun of the above type which is safe to use and which can be manufactured at relatively low cost.

Briefly stated, in one embodiment of the invention these objects are attained in a toy weapon adapted to shoot out sponge-like pellets impregnated with water. The weapon includes a launching chamber above which is vertically mounted a gravity-feed cartridge loaded with a stack of pellets. Also mounted above the chamber is a pump-operated water supply coupled by a tube to the cartridge whereby when the pump is actuated, water is then sprayed into the cartridge to impregnate the pellets therein. Projecting forwardly from the chamber is a gun barrel, while projecting rearwardly therefrom is a cylinder. Slidable within the cylinder is a spring-biased piston joined to a piston rod that extends from the rear end of the cylinder and terminates in a handle.

When a player pulls out the handle, the piston is then at its retracted position and the spring is compressed; and when the handle is released, the expanding spring then advances the piston toward the front end of the cylinder. Projecting from the piston through the chamber and into the barrel is a launching bolt which in the retracted position of the piston cleans the chamber to permit the lowermost wet pellet in the stack to drop therein. When the handle is released, the bolt then drives this pellet through the barrel from which it is discharged toward a target in line with the barrel.

In another embodiment of the invention, the arrangement is such as to pneumatically drive the pellet by a blast of air produced by the advancing piston, thereby obviating the need for a launching bolt to mechanically drive the wet pellet.

## BRIEF DESCRIPTION OF DRAWINGS

For a better understanding of the invention as well as other objects and further features thereof, reference is made to the following detailed description to be read in conjunction with the accompanying drawings, wherein:

FIG. 1 is a perspective view of a toy weapon in accordance with the invention;

FIG. 2 illustrates a pellet of the type serving as the missile for the weapon;

FIG. 3 is a sectional view showing the internal mechanism of the weapon;

FIG. 4 is a section taken in the plane indicated by line 4—4 in FIG. 3;

FIG. 5 shows how the pump of the water supply is operated to spray water into the cartridge to wet pellets loaded therein;

FIG. 6 is a sectional view of the weapon after it has been fired; and

FIG. 7 is a section taken through a modified toy weapon.

## DETAILED DESCRIPTION OF INVENTION

### Weapon Structure

Referring now to FIG. 1, there is shown a toy weapon in accordance with one embodiment of the invention, the weapon being in a gun format and being adapted to fire sponge-like pellets successively out of its barrel.

The gun includes a launching chamber **10** having attached to its underside a hand grip **11**. Mounted vertically above chamber **10** is a gravity-feed cartridge **12** formed of transparent plastic material to expose the pellets loaded therein. The cartridge is socketed by a pair of opposing arms **13** and **14** which are integral with the chamber and have a curvature which conform to the curved wall of the cartridge. The structure of the gun is preferably molded of a high-strength, synthetic plastic material, such as polyethylene or polypropylene

Cartridge **12** is provided at its top end with a removable cap **15** so that it can be loaded with a stack of pellets **16**. As shown separately in FIG. 2, each pellet is constituted by a small, drum-shaped body of sponge-like material. The pellets may be formed of flexible foam plastic material, such as polyurethane of the open-cell type or cellulosic or other material having sponge-like properties capable of absorbing water or other liquids.

Also mounted above chamber **10** adjacent arm **14** is a pump-operated water supply in the form of a plastic bottle **17** having integrated therewith a bellows-type pump **18**, the pump being located on the side of the bottle opposed to the side adjacent arm **14**. Bottle **10** is provided at its top with a detachable stopper **19** which is linked to the bottle by a flexible strap **20**.

Projecting forwardly from chamber **10** is a gun barrel **21** whose front end has a collar **22** attached thereto. Projecting rearwardly from chamber **10** in axial alignment with barrel **21** is a cylinder **23** terminating in a closure cap **24**. Also provided is a handle **25** for operating the gun.

As shown in FIG. 3, inserted in bottle **17**, which is filled with water, is a dip tube **26**. Tube **26** extends out of the bottle, its outlet being attached to cartridge **12** at a point below the upper end thereof. Hence when a player actuates pump **18**, this subjects the water in the bottle to pressure to force the water up dip tube **26**, the water emitted from the outlet being sprayed into the cartridge to wet pellets **16** in the stack that are below the entry point of the water spray.

Slidable in cylinder **23** is a piston assembly formed by a pair of interlinked piston elements **28** and **29** having resilient flanges which engage the inner surface of cylinder **23** and a disc-shaped mount **30** joined to piston **29**. Integral with mount **30** and projecting axially therefrom is a launching bolt **31** that passes through chamber **10** into barrel **21**, the bolt being coaxial with the barrel.

The front end of cylinder **23** is socketed in a coupler **32** at the input side of chamber **10**. Nested within coupler **32** is a thrust bearing **33** through which bolt **31** is slidable. Secured to mount **30** is a resilient gasket **34** which, when the piston assembly is adjacent the front end of cylinder **23**, it then engages the hub of bearing **33**.

Piston element **28** of the piston assembly is joined to one end of piston rod **35** whose other end terminates in handle **25**. Surrounding piston rod **35** within cylinder **23** is a compressible helical spring **36**. The spring is interposed between piston element **28** of the piston assembly and closure cap **24** attached to the rear end of the cylinder. Spring **26** normally urges the piston assembly to its in-stroke position shown in FIG. 5, in which gasket **34** engages the hub of bearing **33**.

When, however, a player pulls out handle **25** so that spring **36** is then compressed as the piston assembly is shifted to a retracted position adjacent the rear end of cylinder **23**, then launching bolt **31** is retracted, as shown in FIG. 3, to clear the launching chamber to allow the lowermost wet pellet in the cartridge stack to drop into the chamber. In this state, the tip of launching bolt **31** is adjacent the side of pellet **16** then in place in the chamber, as shown in FIG. 3.

When the player then releases handle **25**, the piston assembly is urged by the expanding spring toward the front end of cylinder **23**, and the launching bolt at high velocity drives the wet pellet then in the launching chamber through barrel **21** from which it is discharged toward a target in line with the barrel, as shown in FIG. 6.

### Weapon Operation

In operating the weapon, a player first loads cartridge **12** with a stack of dry pellets **16**. He then activates pump **18** to spray water into the cartridge so as to wet those pellets in the stack which lie below the entry point of the spray. The gun is now in condition to be fired.

At this point, the lowermost wet pellet **16** in the fully loaded stack thereof in the cartridge rests on bolt **31** which passes through launching chamber **10** into barrel **21**. In order to fire this pellet, the player must pull out handle **25** as far as it will go. This action causes launching bolt **31** to clear the launching chamber to permit the lowermost wet pellet in the stack loaded in the gravity-feed cartridge to drop into chamber **10**, this pellet being then adjacent the tip of the launching bolt. The second pellet in the stack now rests on top of the first pellet.

The player then releases the handle, causing the advancing bolt to drive the first pellet through the barrel from which it is discharged. Before releasing the handle, the player aims the barrel at a selected target, so that when the handle is released and the pellet is fired, it is directed toward this target.

After the first pellet is discharged, the second wet pellet in the stack now rests on bolt **31**; for the bolt, after the gun is fired, again extends through the launching chamber into the barrel. In order, therefore, to fire the next pellet, the handle must again be pulled out to permit it to drop into the launching chamber. This operation is repeated for the remaining pellets in the stack.

Since the cartridge is transparent, the player can see how many pellets remain in the stack. And when the stack is low so that the remaining pellets are dry—for only those in the full stack below the spray point have been wetted—he can again actuate pump **18** to wet the pellets remaining in the stack before they are fired. And when all of the pellets in the cartridge are discharged, the cartridge is then reloaded.

In practice, use may be made of water dyed by an innocuous, water-soluble coloring agent, so that when

an opposing player is struck by a wet pellet, he is made conspicuously wet with, say, a blood-tinted liquid. The nature of the colored liquid should be such that it can readily be washed off by soapy water and not permanently stain clothing.

The pellets may be in any usable form and need not be drum-shaped as shown. And, in practice, the plastic pellets may be in different colors to distinguish the ammunition used by one player from that used by another.

## Modified Weapon Structure

In the embodiment of the toy weapon shown in FIGS. **1** to **6**, wet pellets **16** loaded into cartridge **12** fall one-by-one into launching chamber **10**, each pellet being driven into the barrel of the gun when the player who has retracted handle **25** then releases it, the advancing piston assembly causing launching bolt **31** to strike the pellet in the launching chamber to drive it through the barrel from which it is discharged. Hence the pellets in this embodiment are mechanically driven.

The modified weapon structure shown somewhat schematically in FIG. **7** is similar to that in FIGS. **1** to **6** and includes a pump-operated water supply for the cartridge in which the dry pellets are loaded as well as a cylinder **23** and a piston rod **35** terminating in a handle and surrounded by a helical spring **26**.

However, in the modified weapon arrangement, piston rod **35** is connected to a piston **37** which slides along the inner surface of cylinder **23**, but so engages this surface as to minimize air leakage. Hence as the piston advances, it compresses the air between the piston and a cap **38** attached to the front end of cylinder **23**. Cap **38** is provided with a central air port **39** which is blocked by the lowermost wet pellet **16** dropped from the cartridge into the launching chamber. A barrel **40** is coupled to the output of this chamber.

When, therefore, the handle of the weapon is pulled back by the player to retract piston **37** and in doing so compresses spring **36**, and the handle is then released, the piston is advanced at a high velocity by the expanding spray toward front end collar **38**. The advancing piston abruptly compresses the air between the piston and the wet pellet blocking air port **39** in collar **38**. The resultant pulse of compressed air acts to propel pellet **16** through barrel **40** from which it is discharged. When a pulse of air fires the lowermost pellet, the next pellet in the stack drops into place in the launching chamber.

Hence the modified toy weapon is pneumatically rather than mechanically fired, but in all other respects it is the same as the weapon shown in FIGS. **1** to **6**.

While there have been shown and described preferred embodiments of a toy weapon for shooting out wet pellets in accordance with the invention, it will be appreciated that many changes and modifications may be made therein, without, however, departing from the essential spirit thereof. Thus instead of a compressible helical spring which is compressed and energized when the piston is retracted, one may use an extendible spring or rubber or other elastomeric material which is energized when the spring is stretched.

I claim:

**1**. A toy weapon adapted to fire wet, sponge-like pellets, said weapon comprising:

(a) a launching chamber above which is vertically mounted a gravity-feed cartridge loaded with a stack of said pellets;

(b) means to wet the pellets in the cartridge, whereby the lowermost pellet in the stack which drops into the chamber is wet;

(c) a gun barrel projecting forwardly from said chamber;

(d) a cylinder having a front end and a rear end in axial alignment with said barrel, said cylinder projecting rearwardly from the chamber; and

(e) a spring-biased piston slidable in said cylinder and joined to a piston rod which extends from the rear end of the cylinder and terminates in a handle; whereby when the piston is pulled out by the handle and is shifted toward the rear end of the cylinder, the spring is then energized, and when the handle is thereafter released, the spring then acts to drive the piston toward the front end of the cylinder to produce a force which drives the pellet then in the chamber through the barrel from which it is discharged.

**2**. A toy weapon as set forth in claim **1**, wherein said force is a pulse of compressed air which is produced when the piston is driven toward the front end of the cylinder.

**3**. A toy weapon as set forth in claim **1**, wherein said spring is a helical spring confined within said chamber, said spring normally urging the piston toward the front end of the cylinder and being compressed and energized when the piston is retracted.

**4**. A toy weapon as set forth in claim **1**, wherein said pellet is formed of flexible, foam plastic material.

**5**. A weapon as set forth in claim **1**, wherein said means to wet the pellets include a water bottle mounted above the chamber adjacent the cartridge, said bottle being provided with a manually-operated pump and a dip tube which extends from the bottle to the cartridge, whereby when the pump is actuated, the water in the bottle is forced up the dip tube into the cartridge to spray pellets therein.

**6**. A weapon as set forth in claim **5**, wherein said bottle is provided with a removable stopper, and said cartridge is provided with a removable cap.

**7**. A weapon as set forth in claim **1**, in which the pellets are drum shaped.

**8**. A weapon as set forth in claim **1**, wherein said cartridge is formed of transparent, synthetic plastic material.

**9**. A weapon as set forth in claim **1**, further including a grip attached to the underside of said chamber, whereby a player, while holding the grip in one hand, can with his other hand pull out the handle.

**10**. A weapon as set forth in claim **1**, further including a launching bolt joined to the piston and projecting therefrom, the bolt passing through said chamber into said barrel, whereby when the piston is pulled out by said handle, said piston is shifted toward the rear end of the cylinder and said spring is energized, the launching bolt then clearing the chamber to permit the lowermost pellet in the stack to drop into said chamber; and when the handle is thereafter released, the spring then acts to drive the piston toward the front end of the cylinder to cause the bolt to push the pellet through the barrel and thereby fire the pellet.

**11**. A weapon as set forth in claim **10**, wherein said piston is joined to a disc-shaped mount from which said launching bolt projects.

**12**. A weapon as set forth in claim **11**, wherein said chamber is provided with a coupler to socket the front end of the cylinder, within which coupler is nested a thrust bearing to receive said bolt, said bearing having a hub, and a resilient gasket supported on the mount which engages said hub when said piston is adjacent the front end of the cylinder.

* * * * *