UNITED STATES PATENT AND TRADEMARK OFFICE

BEFORE THE PATENT TRIAL AND APPEAL BOARD

GEL BLASTER, INC.,

Petitioner,

v.

SPIN MASTER,

Patent Owner.

Patent No. 8,371,282

Issued: February 12, 2013

Filed: May 10, 2010

Inventors: Keith G. Meggs, Ronald Brawer, Michael G. Hoeting, and Neil Hamilton

Title: SOFT-PROJECTILE LAUNCHING DEVICE

Inter Partes Review No. IPR2023-00301

PETITION FOR INTER PARTES REVIEW OF U.S. PATENT NO. 8,371,282
UNDER 35 U.S.C. §§ 311-319 AND 37 C.F.R. § 42.1-.80 & 42.100-.123

TABLE OF CONTENTS

I. INTRODUCTION 1
II. COMPLIANCE WITH REQUIREMENTS FOR A PETITION FOR *INTER PARTES* REVIEW 2
A. Mandatory Notices (37 CFR § 42.8(b)) 2
1. Real Parties in Interest 2
2. Related Matters 2
3. Lead & Backup Counsel 2
4. Service Information 3
B. Fee for Inter Partes Review (§ 42.15(a)) 3
C. Certification of Word Count (§ 42.24(a)(1)) 3
D. Certification of Standing (§ 42.104(a)) 3
E. Proof of Service (§§ 42.6(e) and 42.105(a)) 4
III. Identification of Claims Being Challenged (§ 42.104(b)) 4
IV. Relevant Information Concerning the Contested Patent 5
A. Effective Filing Date of the 282 Patent 5
B. Level of Ordinary Skill in the Art 6
C. Overview of The 282 Patent 6
D. Construction of Terms Used in the Claims 8
1. "super absorbent polymer" 9
2. Preamble 9
3. "a firing mechanism directly applies force to a soft-projectile" 10
V. Overview of the Prior Art 10
A. DuneCraft Spit Balls 10
B. U.S. Patent No. 5,241,944 ("Rappaport") (Ex. 1006) 14
C. U.S. Patent Application 2006/0180134A1 ("Illuzzi") (Ex. 1011) 17

VI. PRECISE REASONS FOR RELIEF REQUESTED 20

A. Ground 1: Claims 1, 4-6 Are Anticipated by DuneCraft 20

1. Claim 1 21
2. Claim 4 – "wherein the soft-projectiles are substantially spherical".....25
3. Claim 5 – "wherein the soft-projectiles have a diameter of less than about 10 millimeters".....26
4. Claim 6 – "wherein the soft-projectiles have a diameter greater than about 4 mm and less than about 9 mm".....27

B. Ground 2: Claims 2-3, 7-14, 16-21 Are Obvious Over Rappaport in View of DuneCraft.....27

1. One of Skill in The Art Would Combine Rappaport with DuneCraft.....28
2. Claim 2 - "wherein the ammunition is disposed within a feed chamber of the projectile launcher." 43
3. Claim 3 – "wherein the feed chamber is in selective communication with a barrel of the projectile launcher" 45
4. Claim 7 – "wherein the super absorbent polymer has a cross linking density sufficient to prevent the soft-projectiles from breaking apart when launched from the projectile launcher".....46
5. Claim 8 48
6. Claim 9 – "wherein the projectile launcher is a toy" 49
7. Claim 10 – "wherein the projectile launcher is in the shape of a gun".....49
8. Claim 11 – "wherein the feed chamber is provided within a magazine"....50
9. Claim 12 – "wherein the soft-projectiles are substantially spherical".....52
10. Claim 13 – "wherein the super absorbent polymer has a cross linking density sufficient to prevent the soft-projectiles from breaking apart when launched from the projectile launcher".....52
11. Claim 14 – "wherein the projectile launcher is designed to use air pressure to launch the soft-projectiles" 53
12. Claim 16 – "further comprising a firing mechanism that is incapable of storing energy independent of a user" 54
13. Claim 17- "further comprising a firing mechanism that directly applies a force to a soft-projectile located in the firing position to launch the soft-projectile from the projectile launcher in free flight".....55

14. Claim 18 – "further comprising a firing mechanism that indirectly applies a force to a soft-projectile located in the firing position to launch the soft-projectile from the projectile launcher in free flight" 56

15. Claim 19 57

16. Claim 20 60

17. Claim 21 – "wherein the absorbency of the super absorbent polymer is sufficiently limited to allow the soft-projectiles to be launched from the projectile launcher without breaking apart".....63

C. Ground 3: Claims 8 and 15 Are Obvious Over Illuzzi in View of DuneCraft.....64

1. One of Skill in The Art Would Combine Illuzzi with DuneCraft.....64

2. Claim 8 67

3. Claim 15 – "comprising a firing mechanism that stores energy independent of a user" 69

I. INTRODUCTION

U.S. Patent No. 8,371,282 ("the 282 patent") describes "soft-projectile launching devices, such as projectile toys. More particularly, the present patent document relates to soft-projectile launching devices that launch super absorbent polymer projectiles and related devices and methods." Ex. 1001, 1:5-9. At a high level, the 282 patent claims using "super absorbent polymer" projectiles and various features of toy guns for launching those projectiles. The 282 patent admits that its invention is not "super absorbent polymer" because "[s]uper absorbent polymers (SAPs) were first invented by the United States Department of Agriculture (USDA) in the 1960s." *Id.*, 3:37-39.

Not surprisingly for 50-year-old technology, using super absorbents as ammunition was well-known in the art. DuneCraft (Exs. 1007 and 1009) disclosed "super absorbent polymer" "Spit Balls" that could be launched via either throwing or via a tube. DuneCraft anticipates the broadest, ammunition only claims.

Toy guns using similar ammunition with the features claimed in the dependent claims were also known in the art, including in Rappaport (Ex. 1006) and Illuzzi (Ex. 1011). The DuneCraft super absorbent polymer balls could readily be substituted for the similar ammunition in Rappaport and Illuzzi, a combination that discloses all the elements of the more detailed "projectile launcher" dependent claims. Amongst other reasons, other contemporaneous references demonstrate

using super absorbent polymer for projectiles, allowing one of skill in the art to readily modify Rappaport and Illuzzi to make the claimed combination.

Petitioner therefore respectfully requests the challenged claims be cancelled.

II. COMPLIANCE WITH REQUIREMENTS FOR A PETITION FOR *INTER PARTES* REVIEW

A. Mandatory Notices (37 CFR § 42.8(b))

1. Real Parties in Interest

The real parties-in-interest are: Gel Blaster, Inc.

2. Related Matters

The 282 Patent is involved in the following legal proceedings involving Petitioner: *Certain Soft Projectile Launching Devices, Components Thereof, Ammunition, and Products Containing Same*, Inv. No. 337-TA-1325 (ITC) ("the ITC action") and *Gel Blaster, Inc. F/K/A Gel Blaster, LLC v. Hasbro, Inc.*, Civil Action No. 1:22-cv-00828-LY (W.D. Texas).

The 282 patent is involved in legal proceedings involving other parties in *Certain Soft Projectile Launching Devices, Components Thereof, Ammunition, and Products Containing Same*, Inv. No. 337-TA-1325 (ITC).

Petitioner has also contemporaneously filed a Petition for *inter partes* review of a divisional of the 282 patent, U.S. Patent No. 8,640,683.

3. Lead & Backup Counsel

Lead Counsel is Scott Doyle. Backup Lead Counsel is Douglas Lewis.

4. Service Information

Petitioner consents to electronic service by email to njpatentgroup@kelleydrye.com; mail or hand delivery service on Petitioner may be made to: Kelley Drye & Warren LLP, Washington Harbour, Suite 400, 3050 K Street, NW, Washington, DC 20007. The fax number for lead and backup counsel is (202) 342-8451.

B. Fee for Inter Partes Review (§ 42.15(a))

The Director is authorized to charge the fee specified by 37 CFR § 42.15(a) to Deposit Account No. 502968.

C. Certification of Word Count (§ 42.24(a)(1))

Petitioners certify that this petition for *inter partes* review contains 13,958 words, excluding the parts that are exempted by 37 C.F.R. § 42.24(a)(1), per the count of the word-processing system used to prepare this petition.

D. Certification of Standing (§ 42.104(a))

Petitioner certifies it is not barred or estopped from requesting *inter partes* review of the 282 Patent. Neither Petitioner nor any party real party in interest with Petitioner has filed a civil action challenging the validity of any claim of the 282 Patent. The 282 Patent has not been the subject of a prior *inter partes* review by Petitioner, a real party in interest, or a privy of Petitioner. Petitioner also certifies this petition is filed within one year of the date of service of a complaint alleging infringement of the challenged patent: Patent Owner Spin Master, Inc.'s ITC

complaint alleging infringement of the 282 Patent was served on August 22, 2022. Ex. 1018. Petitioner therefore certifies this patent is eligible for *inter partes* review.

E. Proof of Service (§§ 42.6(e) and 42.105(a))

Proof of service of this petition is provided in **Attachment A**.

III. Identification of Claims Being Challenged (§ 42.104(b))

Petitioners propose three grounds for trial, none of which are redundant. Claims 1, and 4-6 recite ammunition used with a projectile launcher, and the first ground is based on webpages containing a description of DuneCraft Spit Balls (Exs. 1007, 1009) ("DuneCraft"). The remaining claims recite specific features of a projectile launcher in addition to the ammunition. Consequently, the second ground alleges unpatentability of claims 2-3, 7-14, 16-21 based on U.S. Patent 5,241,944 ("Rappaport") (Ex. 1006) in view of DuneCraft. The third ground alleges unpatentability of claims 8 and 15 and is based on U.S. Patent Application 2006/0180134A1 ("Illuzzi") (Ex. 1011) in view of DuneCraft. As Petitioner understands the claims, Rappaport does not disclose claim 15, hence the need for the third ground. Claim 8 is the parent claim of claim 15 and thus included in the third ground.

Petitioner respectfully requests that trial be instituted on the grounds and arguments advanced herein. Specifically, this Petition seeks a finding that claims 1-21 of the 282 Patent are unpatentable as follows:

i. Claims 1, 4-6 are anticipated by DuneCraft, Exs. 1007 and 1009.

ii. Claims 2-3, 7-14, 16-21 are rendered obvious over U.S. Patent 5,241,944 ("Rappaport") (Ex. 1006) in view of DuneCraft.

iii. Claims 8 and 15 are rendered obvious over U.S. Patent Application 2006/0180134A1 ("Illuzzi") (Ex. 1011) in view of DuneCraft.

Petitioner's proposed claim constructions, the evidence relied upon, and the precise reasons why the claims are unpatentable are provided in §§VI.A-C, below. The evidence relied upon in this petition is listed in Attachment B.

IV. Relevant Information Concerning the Contested Patent

A. Effective Filing Date of the 282 Patent

The application that resulted in the 282 Patent is U.S. Patent Application Serial No. 12/777,134, filed May 10, 2010. Ex. 1001 at Face.

Patent Owner has asserted an earlier invention date for some claims in the ITC action. Ex. 1019. Patent Owner asserted that "the following asserted patent claims in the '282 patent are entitled to an earlier priority date, as follows: '282 claims 1 and 4 were conceived no later than February 21, 2010 and reduced to practice no later than April 8, 2010. '282 claims 2 and 3 were conceived no later than February 21, 2010 and reduced to practice no later than May 10, 2010." Ex. 1019 at 1. Because the prior art in this Petition predates February 21, 2010,

Petitioner will assume that the claims are entitled to a February 21, 2010 priority date.

B. Level of Ordinary Skill in the Art

A person of ordinary skill in the art in the field of the 282 Patent would have been (i) an individual with a Bachelor's degree in Industrial Design or Mechanical Engineering or (ii) a toy designer with at least five years' experience designing toys (including launchers), with both of (i) and (ii) being or having access to a chemist knowledgeable regarding super absorbent polymers. Ex. 1003, ¶48. Individuals with additional education or additional industrial experience could still be of ordinary skill in the art if that additional aspect compensates for a deficit in one of the other aspects of the requirements stated above.

C. Overview of The 282 Patent

The 282 patent describes "soft-projectile launching devices, such as projectile toys. More particularly, the present patent document relates to soft-projectile launching devices that launch super absorbent polymer projectiles." Ex. 1001, 1:5-9. The 282 patent acknowledges that "Super absorbent polymers (SAPs) were first invented by the United States Department of Agriculture (USDA) in the 1960s." *Id.*, 3:37-39. The 282 patent says that "SAPs are polymers that can absorb an extremely large amount of liquid relative to their own mass" (*id.*, 3:41-42) but does not define "extremely large" beyond one example "where they may absorb

500 times their weight, and from 30-60 times their dehydrated volume." *Id.*, 4:58-59. The 282 patent identifies no specific SAP compositions. Ex. 1003, ¶XX.

The 282 patent discloses a high-level structure of a toy gun. "FIG. 1 illustrates a cross section of one embodiment of a projection device 10, which in the present embodiment is a projectile launching toy, designed for use with soft-projectile 16. … As shown in FIG. 1, projection device 10 is in the general form of a gun." *Id.*, 4:60-65.

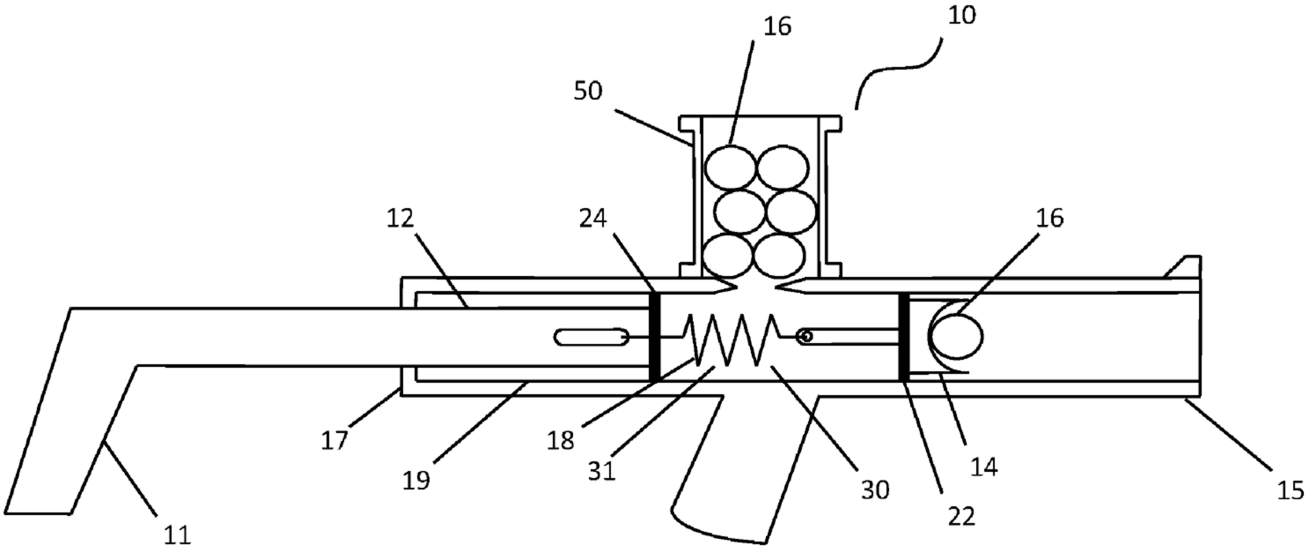

FIG. 1

The 282 patent discusses using a "magazine or feed hopper 50," shown in Figure 1. "Magazine 50 can be of any shape or size and is intended to contain the soft-projectiles 16 made from a SAP." *Id.*, 7:56-60. When using a magazine, "soft-projectiles 16 may only be loaded into the projection device 10 from the magazine 50." *Id.*, 8:19-20.

"The firing mechanism of the embodiment shown in FIG. 1 is based on air pressure, which is created in air compression chamber 31." *Id.*, 5:10-12. To fire the gun, "a user pulls back on the handle 11 which retracts the plunger 12 out of the aft end 17 of a plunger cylinder 19. The plunger 12 is attached to spring 18. As the spring 18 is stretched, air is sucked into an air compression chamber 31 located between plunger seal 24 and air seal 22. … When the user releases the handle 12, the spring 18 quickly pulls the plunger 12 back inside the plunger cylinder 19. This creates a rapid increase in air pressure in the air compression chamber 31 between plunger seal 24 and air seal 22. Consequently, air seal 22 is propelled rapidly through barrel 15 towards the distal end of barrel 15 and simultaneously accelerates the holder for a soft-projectile 14 and the soft-projectile 16. The soft-projectile 16 is launched from the projection device 10." *Id.*, 5:36-53.

D. Construction of Terms Used in the Claims

In the pending ITC Investigation, Petitioner and Patent Owner, as well as several co-Respondents, filed a Joint Claim Construction Chart, Ex. 1020, describing their claim construction disputes. The parties asserted that various terms should be given their plain and ordinary meaning or are indefinite, with the latter beyond the scope of this Petition. The following terms had a proposed construction other than "no construction necessary" or "plain and ordinary meaning" proposed by any party:

1. "super absorbent polymer"

Term	Claim(s)	Proposed By	Complainant' Construction	Respondents' Construction	Staff's Construction
"super absorbent polymer"	1	Gel Blaster	Plain and ordinary meaning, i.e., "polymer that can absorb an extremely large amount of liquid relative to its own mass"	PTT and Splat-R-Ball: No construction necessary; term of art known to those skilled in the art at the time of the alleged invention Gel Blaster: Indefinite	No construction necessary; term of art known to those skilled in the art at the time of the alleged invention

Petitioner believes that this term is indefinite and is arguing such in the ITC action. Because indefiniteness cannot be at issue here, this Petition will use both constructions given in the Joint Chart: Patent Owner's—"polymer that can absorb an extremely large amount of liquid relative to its own mass"—and plain and ordinary meaning—*i.e.*, "no construction necessary."

2. Preamble

Term	Claim(s)	Proposed By	Complainant' Construction	Respondents' Construction	Staff's Construction
'282 patent claim 1 preamble "ammunition configured for use with a projectile launcher"	1 (and any asserted dependent claims)	Staff	Limiting	Preamble of claim 1 is not limiting as to claims 6, 8, 13, 14, 15, 17, 19, 20, and 21 Preamble of claim 1 is limiting for dependent claim 3	Limiting

For purposes of this Petition, Petitioner will assume that the preamble is limiting.

3. "a firing mechanism directly applies force to a soft-projectile"

Term	Claim(s)	Proposed By	Complainant' Construction	Respondents' Construction	Staff's Construction
"a firing mechanism that directly applies force to a soft-projectile"	17	Respondents	Plain and ordinary meaning, i.e. "a firing mechanism that directly applies a force to a soft-projectile"	"a firing mechanism that directly applies a force to a soft-projectile (not via an intermediary)"	Plain and ordinary meaning

For purposes of this Petition, the Board can apply the plain and ordinary meaning of this term. The dispute about this term relates to whether applying a force to an intermediary falls within this term. The embodiment in Rappaport cited against this claim applies force using a bolt that hits the soft-projectile, which constitutes "directly applies force" under either construction.

V. Overview of the Prior Art

A. DuneCraft Spit Balls

DuneCraft's Spit Balls appear on websites at least as early as November 27, 2009. Ex. 1007. Ex. 1007 shows an archived version of the webpage at http://www.thinkgeek.com/geektoys/science/cd32/ as of November 27, 2009 and can be found at https://web.archive.org/web/20091127080602/http://www.thinkgeek.com/geektoys/science/cd32/. Ex. 1007. The declaration in Ex. 1007 shows that this archived webpage reflects the state of this webpage on November 27, 2009.

As reproduced by archive.org, the webpage shown in Ex. 1007 has a blank spot that, if one hovers one's mouse over it, indicates it contained a zoomable picture at http://www.thinkgeek.com/geektoys/science/cd32/zoom/. Clicking on that blank space results in the webpage at http://www.thinkgeek.com/geektoys/science/cd32/zoom/ that as of November 28, 2009 can be found at https://web.archive.org/web/20091128071922/http://www.thinkgeek.com/geektoys/science/cd32/zoom/. Ex. 1009. The declaration in Ex. 1009 shows that this archived webpage reflects the state of this webpage on November 28, 2009.

Both webpages were accessible at the same time, were linked together, and were put forth by the same party, thinkgeek.com, and thus can be treated as one publication. *See* Internet pages and electronic publications, 3 Annotated Patent Digest § 17:24 ("Web sites often contain a collection of pages of material. Hence, an issue may arise as to whether disclosures on different pages of a single website constitute a 'single' publication for purposes of anticipation. Where the collection of relevant pages are different pages of the same article posted on the site, the collection of pages likely constitutes a 'single' publication."). Accordingly, these two webpages (Ex. 1007, 1009) are together (collectively "DuneCraft") prior art to the 282 patent under 35 U.S.C. §102(a).

DuneCraft explains that "Spitballs start out as tiny balls and expand 200 times when stuck in water." Ex. 1007. After hydration, "[t]hey are slimy and squishy." *Id.* DuneCraft also says that the Spit Balls "[w]ill bounce and/or explode into mushy parts on impact (depending on the force you throw them)" and that the balls are "spherical polymers." *Id.* "Spitballs grow to about 0.6" in diameter (the longer they absorb water, the bigger they grow)." *Id.*

DuneCraft also shows multiple spit balls in a person's hand and a bowl of spit balls, Ex. 1007, as reproduced below:

The picture of the Spit Balls product packaging shows both un-hydrated balls (in plastic, lower middle) and hydrated balls (picture on packaging, bottom left, and in front of the packaging, bottom right) (Ex. 1009):

The Spit Balls product packaging also says that the balls "grow[] 200x their size," that they "slip, slide, bounce, and explode," and that they are "fun to throw."

DuneCraft shows a projectile launcher in the form of a cylindrical tube, shown on the packaging in a background cartoon with a child launching a Spit

Ball. Ex. 1009; Ex. 1003, ¶66. The child's blue eyes are at the top with her or his nose between them and a hand in front of their nose. The hand is holding a white Spit Ball projectile launching tube to the child's mouth. And shown immediately behind the plastic containing the Spit Balls, the tube launches a cartoon spit ball. *Id*.

B. U.S. Patent No. 5,241,944 ("Rappaport") (Ex. 1006)

U.S. Patent No. 5,241,944 to Rappaport ("Rappaport") was filed on August 24, 1992, and issued on September 7, 1993. Ex. 1006 at Face. Accordingly, Rappaport is prior art to the 282 Patent pursuant to 35 U.S.C. § 102(b).

Rappaport describes "a toy gun adapted to shoot out innocuous soft pellets formed of flexible foam plastic material impregnated with water, so that an individual struck by the pellet is made wet thereby." Ex. 1006, 1:9-12. This is intended to "combin[e] the advantages of those toy weapons which fire dry missiles and those which only shoot out water." Ex. 1006, 2: 6-9.

Rappaport's toy gun fires missiles or pellets where "each pellet is constituted by a small, drum-shaped body of sponge like material. The pellets may be formed of flexible foam plastic material, such as polyurethane of the open cell type or cellulosic or other material having sponge like properties capable of absorbing water or other liquids." Ex. 1006, 3:28-34. Also, "[t]he pellets may be in any usable form and need not be drum-shaped as shown." *Id.,* 5:6-7. Rappaport also

discusses a prior art patent that shoots "soft balls of flexible, foam plastic material." *Id.,* 1:42-54.

Rappaport describes using a cartridge to avoid having to reload the toy gun "each time a missile is fired, for the gun includes a cartridge loaded with a stack of soft, wet missiles; and when a missile is fired from a launching chamber, another missile drops into the chamber in readiness to be fired." *Id.,* 2:14-19. "The gun includes a launching chamber 10 having attached to its underside a hand grip 11. Mounted vertically above chamber 10 is a gravity-feed cartridge 12 formed of transparent plastic material to expose the pellets loaded therein." *Id.,* 3:16-20. The cartridge is shown as element 12 on Figure 1:

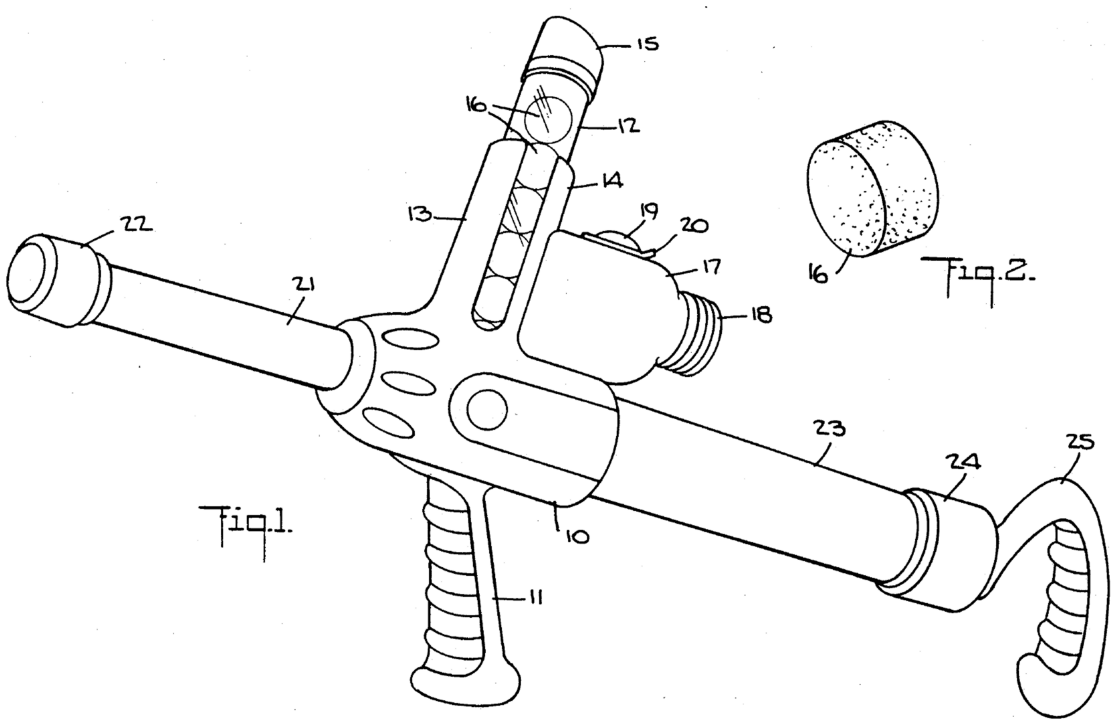

Rappaport's first embodiment uses a "launching bolt" to directly launch the projectiles: "[w]hen, however, a player pulls out handle 25 so that spring 36 is then

compressed as the piston assembly is shifted to a retracted position adjacent the rear end of cylinder 23, then launching bolt 31 is retracted, as shown in FIG. 3, to clear the launching chamber to allow the lowermost wet pellet in the cartridge stack to drop into the chamber. … When the player then releases handle 25, the piston assembly is urged by the expanding spring toward the front end of cylinder 23, and the launching bolt at high velocity drives the wet pellet then in the launching chamber through barrel 21." Ex. 1006, 4:12-26.

Rappaport's second embodiment uses air pressure to launch missiles: "as the piston advances, it compresses the air between the piston and a cap 38 attached to the front end of cylinder 23. Cap 38 is provided with a central air port 39 which is blocked by the lowermost wet pellet 16 dropped from the cartridge into the launching chamber. A barrel 40 is coupled to the output of this chamber. When, therefore, the handle of the weapon is pulled back by the player to retract piston 37 and in doing so compresses spring 36, and the handle is then released, the piston is advanced at a high velocity by the expanding spray toward front end collar 38. The advancing piston abruptly compresses the air between the piston and the wet pellet blocking air port 39 in collar 38. The resultant pulse of compressed air acts to propel pellet 16 through barrel 40 from which it is discharged. When a pulse of air fires the lowermost pellet, the next pellet in the stack drops into place in the launching chamber." *Id.,* 5:30-47. Figure 7 shows this embodiment:

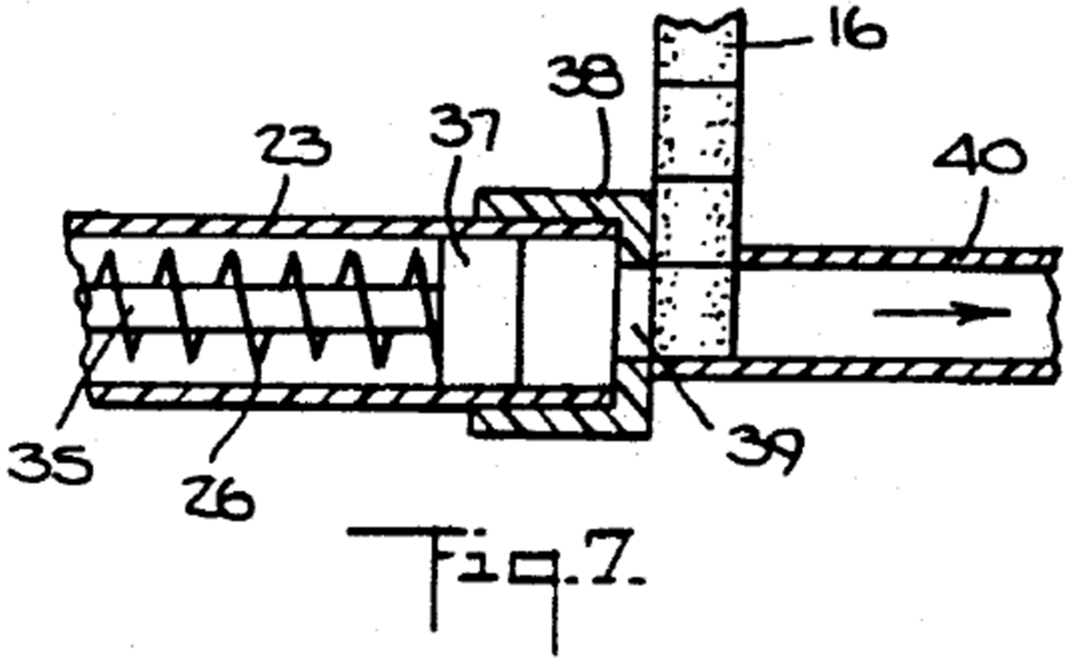

C. U.S. Patent Application 2006/0180134A1 ("Illuzzi") (Ex. 1011)

U.S. Patent Application 2006/0180134A1 ("Illuzzi") published on August 17, 2006 from an application filed on February 11, 2005. Ex. 1011, Face. Illuzzi is prior art to the 282 Patent under 35 U.S.C. §102(b).

Illuzzi describes "a combination solid projectile and paintball gun. It includes a main housing, a trigger, a barrel, a first projectile port, a second projectile port, means for opening and closing the ports, and an adapter for attachment to the gun for feeding and firing solid projectiles. By 'solid' is meant having no liquid, and includes dense, hard materials as well as soft porous materials. These solid projectiles could be foam, plastic, cork, wood, or other material or combinations thereof." Ex. 1011, ¶0017. Illuzzi also discloses "soft"

projectiles: "The combination soft projectile and paintball gun of the present invention includes…" Ex. 1011, ¶0023.

Illuzzi's paintball gun is shown in Figure 2 (reproduced below), where the "combination solid projectile and paintball projectile gun 100 includes most of the functional features at the prior art gun 1 of FIG. 1, except that hopper 13 has been removed and adapter housing 31 with attachment means 33 has been attached in its place. Adapter housing 31 contains a plurality of solid projectiles 41 that are fed by gravity individually into paintball feeder port 15 and are subsequently fired with trigger 11 using the force of a compressed gas source 9." Ex. 1011, ¶0053.

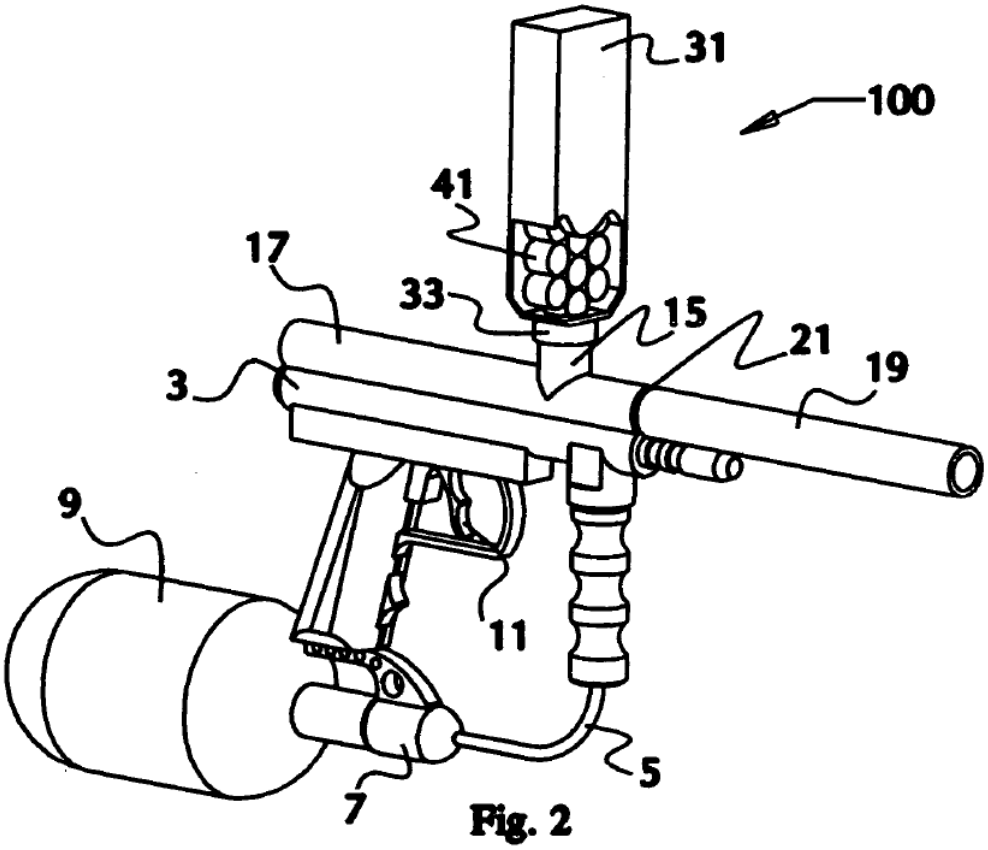

Fig. 2

Illuzzi discloses several shapes for its "liquid-free projectile 120," including spherical. Ex. 1011, ¶0024; also ¶0067; Ex. 1003, ¶76. Figures showing this are below:

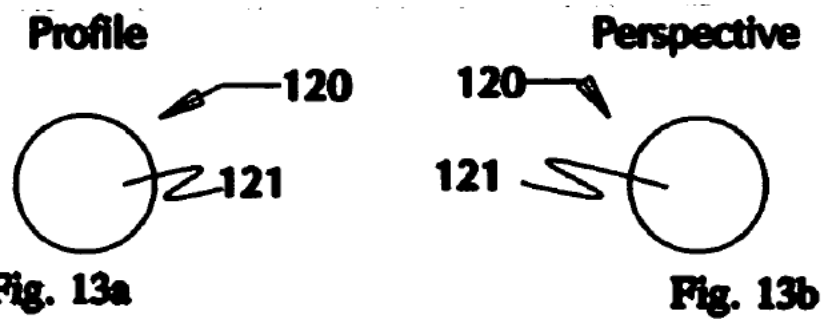

Fig. 13a Fig. 13b

Illuzzi also discloses single material projectiles: "FIG. 46 illustrates a cut view of a projectile 460 having a construction of a single material 461." Ex. 1011, ¶0091.

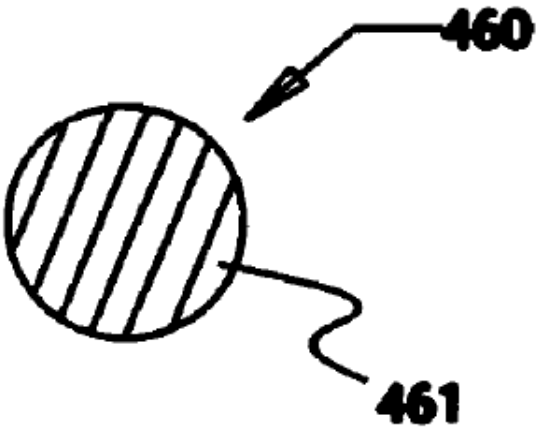

Fig. 46

And Illuzzi discloses that the single material in Figure 46 can be a polymer. Ex. 1011, ¶0095, Table:

FIGURE	ITEM	MATERIAL
34	341	Polymer
35	351	Rubber
35	353	Metal
36	361	Foam
36	363	Wood
37	371	Polymer
37	375	Ceramic
38	381	Cork
38	385	Metal
39	391	Wood
39	397	Polymer
40	401	Foam
40	403	Metal
40	407	Ceramic
41	411	Wood
41	413	Ceramic
41	415	Rubber
42	421	Metal
42	423	Polymer
43	431	Rubber
43	433	Cork
43	437	Ceramic
44	441	Metal
44	443	Polymer
44	445	Rubber
45	451	Foam
45	455	Ceramic
45	457	Polymer
45	459	Metal
46	461	Polymer
47	471	Foam
47	473	Metal
48	481	Ceramic
48	483	Cork
48	485	Metal
49	491	Rubber
49	493	Cork
49	495	Polymer
49	497	Metal

VI. PRECISE REASONS FOR RELIEF REQUESTED

A. Ground 1: Claims 1, 4-6 Are Anticipated by DuneCraft

As explained below, DuneCraft discloses every element of claims 1 and 4-6 of the 282 patent. Consequently, DuneCraft anticipates these claims.

1. Claim 1

a) [1A] Preamble

Assuming that the preamble is limiting, claim 1 recites "Ammunition configured for use with a projectile launcher comprising." DuneCraft discloses "ammunition" configured for use with a projectile launcher.

The specification describes a projectile launcher broadly, noting that a "projection device 10 can be a bow, crossbow, sling shot, handgun, machine gun, futuristic weapon, catapult, or shaped as any other type of weaponry." Ex. 1001, 4:67-5:3. The 282 patent also explains that a "projection device" is the same as a "projectile launcher": "projection device 10, which in the present embodiment is a projectile launching toy." Ex. 1001, 4:61-62; also 6:28-29, 7:57-58; Ex. 1003, ¶82.

DuneCraft describes a projectile launcher within this broad definition. Ex. 1003, ¶83. DuneCraft describes using the disclosed balls as "Spitballs," and says that "you flung awesome spherical polymers at your friends and/or coworkers." Ex. 1007. DuneCraft also discloses that one can "throw-em." *Id.* DuneCraft says on its packaging that the Spit Balls are "fun to throw." Ex. 1009. Spit Balls are thus "projectiles." Ex. 1003, ¶83. One of skill in the art would understand that throwing a Spit Ball requires a "projectile launcher" in the form of a hand and arm, especially in view of the specification's broad definition of "projectile launcher." *Id.*

The DuneCraft Spit Balls' packaging shows a cartoon child using a cylindrical tube to shoot spitballs, reproduced below. Ex. 1009; Ex. 1003, ¶84. The child's blue eyes are at the top with her or his nose between them and a hand in front of their nose. The hand is holding a white launching tube to the child's mouth. And immediately behind the plastic containing the Spit Balls, the tube is launching a cartoon spit ball. *Id*.

Spit Balls are thus "projectiles," and this tube is a "projectile launcher," especially given the specification's broad definition of "projectile launcher," where the projectiles are the Spit Balls. Ex. 1003, ¶84.

DuneCraft discloses "ammunition configured for use" with this "projectile launcher." Ex. 1003, ¶85. DuneCraft discloses "Spitballs." Ex. 1007. DuneCraft discloses throwing and flinging the Spitballs, which are configured for use with a human hand and arm as a launcher. Ex. 1003, ¶85. DuneCraft discloses a cartoon spit ball tube. One of skill in the art would know that "spit balls" are intended and configured to be used with such a spitball tube and are therefore configured for use with a "projectile launcher." *Id.*

DuneCraft discloses the preamble. Ex. 1003, ¶86.

b) [1B] - "a plurality of soft-projectiles having the same shape, each soft projectile being formed from hydrated super absorbent polymer."

Claim 1 recites: "a plurality of soft-projectiles having the same shape, each soft projectile being formed from hydrated super absorbent polymer." DuneCraft discloses this element.

DuneCraft discloses a "plurality" of projectiles "having the same shape." Ex. 1003, ¶88. DuneCraft discloses using more than one—a plurality—including multiple, same shape Spit Balls at the bottom left and right corners of the picture of the packaging. *Id.*; Ex. 1009. DuneCraft also shows a bowl of multiple, same shape spit balls and multiple, same shape spit balls in a hand. Ex. 1007. DuneCraft also discusses Spit Balls in the plural. Ex. 1007 ("Spitballs start off as small hard little

spheres"). One of skill in the art would understand that this reference discloses "a plurality of" projectiles "having the same shape." Ex. 1003, ¶88.

DuneCraft discloses "soft-projectiles": Spit Balls are made from "polymers" and "expand 200 times when stuck in water." Ex. 1007; Ex. 1003, ¶89. The reference also discloses that the spit balls "are slimy and squishy." Ex. 1007. "Squishy" tells one of skill in the art that the spit balls are soft. Ex. 1003, ¶89. DuneCraft also shows the original, unexpanded size of the Spit Balls. Ex. 1009. One of skill in the art would know that adding water and expanding a polymer to 200x its original size will result in a "soft" projectile. Ex. 1003, ¶89. And DuneCraft discloses that these balls are "projectiles" for the reasons discussed for Element 1A. DuneCraft discloses "soft-projectiles." *Id.*

DuneCraft discloses that each of the "soft-projectiles" is "formed from hydrated super absorbent polymer." Ex. 1003, ¶90. DuneCraft discloses that the spit balls are made from "spherical polymers" that "start out as tiny balls and expand 200 times when stuck in water." Ex. 1007. The package says that each spit ball "grows 200x their size." Ex. 1009. Expanding in "water" shows that the spit balls are "hydrated." Ex. 1003, ¶90. The disclosure of "polymers" discloses that the spit balls are made of polymer. *Id*. One of skill in the art would understand that only a "super absorbent polymer" would "expand 200 times when stuck in water," which is an "extremely large amount of liquid relative to its own mass" and which

is consistent with the ordinary meaning of "super absorbent polymer." Ex. 1003, ¶¶57, 90. DuneCraft discloses "each soft projectile being formed from hydrated super absorbent polymer." *Id.*, ¶90.

DuneCraft discloses every limitation of claim 1 and therefore anticipates it. Ex. 1003, ¶91.

2. Claim 4 – "wherein the soft-projectiles are substantially spherical"

Claim 4 adds to claim 1 "wherein the soft-projectiles are substantially spherical." In addition to claim 1 described above, DuneCraft discloses this claim's added limitation.

DuneCraft shows "substantially spherical" soft-projectiles, as shown on the figure to the right from Ex. 1007. Ex. 1003, ¶ 93. Ex. 1009 also shows spherical Spit Balls, with one relevant portion reproduced below. *Id.* DuneCraft also says that the Spit Balls are "spherical polymers." Ex. 1007. DuneCraft therefore discloses "substantially spherical" soft-projectiles. Ex. 1003, ¶93.

(from Ex. 1009)

DuneCraft discloses every limitation of this claim and therefore anticipates it. Ex. 1003, ¶94.

3. Claim 5 – "wherein the soft-projectiles have a diameter of less than about 10 millimeters"

Claim 5 adds to claim 4 "wherein the soft-projectiles have a diameter of less than about 10 millimeters." In addition to claim 4 described above, DuneCraft discloses this claim's added limitation.

DuneCraft discloses that "Spitballs start out as tiny balls" and "Spitballs grow to about 0.6" in diameter (the longer they absorb water, the bigger they grow)." Ex. 1007. 0.6 inches is about 15 mm. Ex. 1003, ¶96. Although 0.6"/15 mm is greater than 10 mm, DuneCraft explains that 0.6" is the maximum diameter ("grow to about 0.6"), and if left in water for a shorter time, the Spit Balls will be smaller—"the longer they absorb water, the bigger they grow." *Id*. Given that the spit balls start "tiny" and can be as big as 15 mm, they necessarily go through a stage where their diameter is "less than about 10 millimeters." *Id*. And if removed

from water at that time, they would stay at that size unless put back in water or allowed to dehydrate. *Id*.

DuneCraft discloses every limitation of this claim and therefore anticipates it. Ex. 1003, ¶97.

4. Claim 6 – "wherein the soft-projectiles have a diameter greater than about 4 mm and less than about 9 mm"

Claim 5 adds to claim 4 "wherein the soft-projectiles have a diameter greater than about 4 mm and less than about 9 mm." In addition to claim 4 described above, DuneCraft discloses this claim's added limitation.

As explained for claim 5, given that the DuneCraft spit balls start "tiny" and can grow as big as 15 mm, they necessarily go through a stage where their diameter is "greater than about 4 mm and less than about 9 mm." Ex. 1003, ¶99. If removed from water at that time, they would stay at that size unless put back in water or allowed to dehydrate. *Id*.

DuneCraft discloses every limitation of this claim and therefore anticipates it. Ex. 1003, ¶100.

B. Ground 2: Claims 2-3, 7-14, 16-21 Are Obvious Over Rappaport in View of DuneCraft

The combination of Rappaport and DuneCraft discloses all of the elements of claims 2-3, 7-14, 16-21. Rappaport discloses the elements of these claims except those relating to a projectile made of "super absorbent polymer." DuneCraft

discloses that element. As explained below, one of skill in the art at the time of the invention would know to use DuneCraft's Spit Balls in Rappaport's gun. Claims 2-3, 7-14, 16-21 are therefore obvious over Rappaport in view of DuneCraft. Ex. 1003, ¶101.

1. One of Skill in The Art Would Combine Rappaport with DuneCraft

One of skill in the art would combine Rappaport's toy gun with the super absorbent polymer balls disclosed in DuneCraft by substituting Rappaport's "flexible foam plastic material, such as polyurethane of the open cell type or cellulosic or other material having sponge like properties capable of absorbing water or other liquids" with the super absorbent polymer balls disclosed in DuneCraft. Ex. 1003, ¶102. The state of the art at the time of the invention shows that one of skill in the art would have known to modify Rappaport by combining it with the DuneCraft Spit Balls to arrive at the claimed invention. *Id.*

a) The State of the Art and the Knowledge of One of Skill in the Art at the Time of the Invention

Contemporaneous evidence shows that one of skill in the art would have been motivated to use DuneCraft's super absorbent balls in Rappaport's gun. Safety issues would motivate one of skill in the art to replace DuneCraft's spit ball launching tube with a toy gun. And at about the same time as the alleged invention,

other inventors also used gels and super absorbents as projectiles, including in toy guns.

One of skill in the art would be motivated to replace the DuneCraft launchers with toy guns such as those in Rappaport and Illuzzi to solve a serious safety problem with the DuneCraft launchers. Ex. 1003, ¶104. DuneCraft's projectile launchers rely on the user's breath to project the super absorbent polymer projectile. DuneCraft shows a tube used to shoot spit balls. As is well known in the art, spit balls are put into a tube and the user inhales and blows on the end of the tube to project the spit ball towards its target. *Id.* The packaging of the DuneCraft Spit Balls shows a cartoon version of such a tube and a child blowing on the end to project a DuneCraft Spit Ball:

The risk with the DuneCraft projectile launcher tube is that the user, usually a child, inhales with their mouth on the end of the tube. Ex. 1003, ¶105. This risks inhaling the super absorbent polymer projectile, which was previously loaded into the tube. Inhaling these projectiles could damage a child's airway and lungs. In particular, unless fully hydrated (*i.e.*, so it will accept no more water), the super absorbent projectile may absorb additional water from the child's body and increase in size, which can cause serious medical issues. Even if it does not

increase in size, having an object the size of one of the DuneCraft Spit Balls in a child's lung could cause medical problems. *Id.*

Even if the super absorbent projectile only goes into the child's mouth, a child may swallow the super absorbent projectile. Ex. 1003, ¶106. DuneCraft's super absorbent polymer spit balls are not sterile and having them in a child's mouth allows germs to enter that child's body. Ingesting such a super absorbent projectile can lead to serious medical issues. These projectiles can increase in size in the child's digestive system and become lodged in place or block that system, possibly requiring medical intervention. Indeed, this caused a recall of a super absorbent toy. *See e.g.*, Ex. 1022; Ex. 1003, ¶106.

One of skill in the art would understand these safety problems and seek to improve these projectile systems. Ex. 1003, ¶107. Such a person would be aware of guns, and in particular, toy guns, that could replace the breath-based launchers and that could shoot DuneCraft super absorbent balls via a toy gun rather than using a child's breadth. Using a toy gun with a projection mechanism such as a spring eliminates the need for a child to blow into a tube, increasing the safety of the DuneCraft super absorbent polymer projectiles. *Id.*

One of skill in the art would recognize safety as a major issue for toys, particularly projectile toys, and seek to improve the safety of the launchers of the super absorbent polymer Spit Balls. Rappaport stresses safety. *See e.g.*, Rappaport,

1:19-20 ("for in toys, safety is a primary consideration"); also 2:20-21; Ex. 1003, ¶108. The need to improve the safety of the DuneCraft super absorbent polymer projectile launchers would motivate one of skill in the art to use the projectile launchers in Rappaport and Illuzzi with the super absorbent polymer projectiles disclosed in DuneCraft. *Id.*

One of skill in the art would know to use the super absorbent polymers disclosed in DuneCraft as ammunition for guns and in particular for toy guns. Ex. 1003, ¶109. Several contemporaneous references show using such ammunition in guns before or slightly after the alleged conception date and the filing date.

KR20100004855U ("Kim application"), published May 11, 2010 (one day after the 282 patent's filing date) but with a Korean filing date of November 1, 2008, discloses, as its title says, Toy bullets formed of gel or gel material. Ex. 1013. Element 22 is identified as "gel or gel bullet." Ex. 1013, [0038]. One of skill in the art would know that a "gel or gel bullet" would be soft. Ex. 1003, ¶110. The Kim application explains that "The object of the present device is to prevent injury to the human body by using bullets formed of gel or gel material when firing toy bullets." *Id.* at [0003]. These safety concerns have the same rationale as in Rappaport and in the 282 patent. Ex. 1006, 1:13-20 ("those weapons which act to shoot out a missile capable of inflicting even slight injury on an individual struck by the missile are not acceptable; for in toys, safety is a primary consideration.");

also 2:20-21 ("an object of this invention is to provide a toy gun of the above type which is safe to use"); Ex. 1001, 3:3-6 ("The super absorbent polymer projectile launching toys and/or weaponry described herein may increase the user experience as compared to foam-based projectile toys, yet they remain safe for children to use.").

Although the Kim application is not pre-AIA prior art, it demonstrates the state of the art at the time of the 282 patent's alleged invention. *See Cross Med. Prod., Inc. v. Medtronic Sofamor Danek, Inc.*, 424 F.3d 1293, 1322 (Fed. Cir. 2005) ("Evidence of a motivation to combine references need not be in the form of prior art. Evidence that a person of ordinary skill in the art recognized the same problem to be solved as the inventor and suggested a solution is, at the least, probative of a person of ordinary skill in the art's willingness to search the prior art in the same field for a suggestion on how to solve that problem.") (internal citations omitted). The Kim application was filed in 2008, before the 282 patent's invention and is thus evidence that those of skill in the art at the time of the alleged invention had already thought of using soft, gel pellets like DuneCraft's in a toy gun and for the same reasons given in Rappaport and in the 282 patent. Ex. 1003, ¶111.

Other contemporaneous references also show that people of skill in the art were thinking of the same combination that this ground asserts, *i.e.*, putting super

absorbent polymer balls into a gun. For example, https://www.aaroncake.net/spuds/things.asp ("Cake") (Ex. 1014) shows that people of skill in the art knew to use super absorbent polymer in projectile launchers before the priority date of the 282 patent. Ex. 1003, ¶112. Cake is prior art under 35 U.S.C. §102(b), having published on the internet on or before February 6, 2009, proof of which can be found at https://web.archive.org/web/20090206231446/https://www.aaroncake.net/spuds/things.asp with a copy of that webpage and a declaration from archive.org in Ex. 1014.

Cake states that "There are a lot of things you can shoot in your spudgun besides potatoes. Here are a few you might want to try:" and lists "Wet Diaper": "First find an un-used diaper and cut a hole in the middle of it. Shake out all of that fluffy stuff into a bowl, add a lot of water and the stuff soaks it up. Put this gel-like stuff in a small cup and drop it in your gun. Good to have fights with." Ex. 1014 at 3. The "fluffy stuff" in a diaper at that time would be a super absorbent polymer. Ex. 1003, ¶113. Cake shows that people of skill in the art knew to use super absorbent polymer as ammunition in a gun before the invention underlying the 282 patent. *Id.*

In addition, evidence from slightly after the filing date is also relevant to the state of the art and whether one of skill in the art would know to use the DuneCraft

balls as projectiles in the Rappaport gun. "The fact of near-simultaneous invention, though not determinative of statutory obviousness, is strong evidence of what constitutes the level of ordinary skill in the art," and "[t]he issue of simultaneous invention is directly tied to the level of knowledge attributable to one of ordinary skill in the art." *Ecolochem, Inc. v. Southern California Edison Co.*, 227 F.3d 1361, 1379 (Fed. Cir. 2000) (*quoting The Int'l Glass Co. v. United States*, 187 Ct.Cl. 376, 408 F.2d 395, 405 (1969)). Simultaneous invention can occur even a year after an invention date. *Geo M. Martin Co. v. Alliance Machine Systems Intern. LLC*, 618 F.3d 1294,1306 (Fed. Cir. 2010) ("The district court was therefore correct to conclude that the invention of the Tecasa machine, occurring only a year later than the earliest possible reduction-to-practice date of the claimed invention, qualified as a simultaneous invention.").

Carlson, U.S. Patent No. 8,584,589 ("Carlson") (Ex. 1016) was filed on October 6, 2010, about five months after the 282 patent, and discloses such a simultaneous invention, making it evidence of the contemporaneous knowledge of one of skill in the art. Ex. 1003, ¶115. Carlson's "invention relates to [] toy projectiles" (1:13) with a "projectile 100." Carlson describes this projectile as "molded and dehydrated into a projectile shape to form the dehydrated, pulp-based projectile. In operation, the pulp-based projectile can be positioned within the bullet chamber (e.g., gun clip) of a toy gun and then rehydrated. For example, the

toy gun or bullet chamber can be dipped in water, which would cause the projectile to absorb the water, soften, and expand. An advantage to being pulp based is that the projectile is more solid and smaller than foam and, as such, generally shoots straighter and further than foam." Ex. 1016, 1:66-2:9. Carlson discloses that "projectile 100" can be "formed in a variety of shapes, non-limiting examples of which include being round" and made of "a rice-based material, dehydrated gels, a hydro-polymer (similar to the absorbent polymer material used in a diaper), and a sponge material that is compressed and dehydrated." Ex. 1016, 3:53-56. One of skill in the art would know that "a hydro-polymer (similar to the absorbent polymer material used in a diaper)" refers to a hydrated super absorbent polymer because in 2010, diapers used super absorbents and because a "hydrated super absorbent polymer" is a "hydro-polymer." Ex. 1003, ¶115. Carlson also discusses the intention for its projectile to "increase safety." Ex. 1016, 1:61.

Carlson shows the general level of knowledge in the art at the time of the invention and that one of skill in the art would have known to use a round super absorbent polymer projectile in a toy gun. Ex. 1003, ¶116. Carlson also shows that the state of the art at the time of the invention included a "projectile [that] is more solid and smaller than foam and, as such, generally shoots straighter and further than foam" that would tell one of skill in the art that a super absorbent polymer projectile like DuneCraft would work in a toy gun. Ex. 1016, 2:7-9; Ex. 1003,

¶116. Carlson is further evidence that a knowledgeable person would know and be motivated to use DuneCraft's super absorbent polymer balls in Rappaport's toy gun. *Id.*

Carlson, Cake, and the Kim application demonstrate that one of skill in the art at the time of the alleged invention would have known to use gel and super absorbent balls as projectiles for guns and been motivated to use DuneCraft's super absorbent polymer balls in Rappaport's gun. DuneCraft's Spit Balls solve the same safety problem that Rappaport was trying solve. Ex. 1003, ¶117. Carlson and the Kim application also explain that they used gel and super absorbent balls to solve this same gun safety problem. And Carlson and Cake show that one of skill in the art would be aware of the claimed combination—using a super absorbent polymer projectile in a toy gun.

b) Combining Rappaport's Toy Gun with DuneCraft's Spit Balls Combines Prior Art Elements in a Known Manner to Yield Predictable Results

As the above evidence shows, combining Rappaport's toy gun with DuneCraft's Spit Balls combines prior art elements in a known manner to yield predictable results. Other inventors (Carlson and Cake) had done exactly that.

In the Rappaport/DuneCraft combination, each element performs the same function that it does separately. DuneCraft discloses Spit Balls that act as projectiles when launched through a tube, and those Spit Balls would act as

projectiles when used in Rappaport's toy gun. The function of the DuneCraft Spit Balls does not change. Ex. 1003, ¶119. The Rappaport gun also would work exactly the same if its pellets "formed of flexible foam plastic material, such as polyurethane of the open cell type or cellulosic or other material having sponge like properties capable of absorbing water or other liquids" (Ex. 1006, 3:28-34) were substituted with DuneCraft's super absorbent polymer Spit Balls. Ex. 1003, ¶119. Carlson shows that one of skill in the art knew to make that swap: "An advantage to being pulp based is that the projectile 100 is more solid than foam and, as such, generally shoots straighter and further than foam." Ex. 1016, 4:1-4; 3:53-56 (pulp can be "a hydro-polymer (similar to the absorbent polymer material used in a diaper)"); Ex. 1003, ¶119.

One of ordinary skill in the art would have recognized that the results of the Rappaport/DuneCraft combination were predictable. Ex. 1003, ¶120. The evidence discussed above, Carlson, Cake, and the Kim application, shows that at the time of the invention, those of skill in the art were using guns with polymer gel and super absorbent polymer as projectiles. It was predictable that putting DuneCraft's super absorbent polymer Spit Balls in Rappaport's gun would yield a working gun. *Id*.

c) Substituting DuneCraft's Spit Balls for the Pellets in Rappaport's Gun Yields Predictable Results

Combining Rappaport's toy gun with DuneCraft's Spit Balls requires only a simple substitution of one known element for another to obtain predictable results.

Rappaport's hydrated, soft pellets "may be formed of flexible foam plastic material, such as polyurethane of the open cell type or cellulosic or other material having sponge like properties capable of absorbing water or other liquids." Ex. 1006, 3:28-34. DuneCraft describes Spit Balls that have absorbed water sufficient to increase their size up to 200 times and that are "squishy." Ex. 1007, 1009. These balls "grow to about 0.6" in diameter" (Ex. 1007) and thus the size of toy ammunition. Ex. 1003, ¶122. Carlson shows that one of skill in the art knew to make that swap and that the results were predictable: "An advantage to being pulp based is that the projectile 100 is more solid than foam and, as such, generally shoots straighter and further than foam." Ex. 1016, 4:1-4; 3:53-56 (pulp can be "a hydro-polymer (similar to the absorbent polymer material used in a diaper)"); Ex. 1003, ¶122. Carlson, Cake, and the Kim Application show that one of skill in the art would have known to use gel polymer balls in guns, including super absorbent polymers, making those known materials for projectiles. *See id.*; *also* Ex. 1013, 1014, 1016.

Rappaport differs from the claims in this ground only in that it does not use a projectile made of "super absorbent polymer" (although its projectile is "soft," "absorbent," "polymer," and "hydrated"). Ex. 1003, ¶123. The combination sought is simply to substitute DuneCraft's super absorbent polymer balls for Rappaport's "sponge like" pellets. *Id.*

Both types of ammunition and using them in projectile launchers were known in the art as shown by Rappaport and DuneCraft, as well as Carlson, Cake, and the Kim application. One of skill in the art would have known to substitute one known element–DuneCraft's super absorbent polymer balls—for another known element—Rappaport's "sponge like" pellets—and the results of the substitution would have been predictable, as demonstrated by Carlson, Cake, and the Kim application. Ex. 1003, ¶124.

d) Using DuneCraft's Spit Balls in Rappaport's Gun Applies a Known Technique to a Known Device Ready for Improvement to Yield Predictable Results

Using DuneCraft's Spit Balls in Rappaport's gun applies a known technique to a known device ready for improvement to yield predictable results. Rappaport describes projectiles made of non-environmentally friendly materials that would have to be collected after being shot or left at risk to the environment. One of ordinary skill in the art could have applied the known technique of using super absorbent projectiles to a known device, Rappaport's gun, to improve that gun to shoot environmentally friendly ammunition. The results of making this improvement would have been predictable. Ex. 1003, ¶125.

Using polymer and super absorbent polymer ammunition like DuneCraft super absorbent polymer balls was a known technique that would apply to and improve the Rappaport gun, as shown by Carlson, Cake, and the Kim application.

Ex. 1003, ¶126. The technique of using such materials in guns was recognized as part of the ordinary capabilities of one skilled in the art. *Id*.

Using DuneCraft's ammunition in Rappaport's gun would result in an improved gun with disposable, biodegradable pellets that did not need to be collected. Ex. 1003, ¶127. One of skill in the art would realize that a child playing with Rappaport's "pellets formed of flexible, foam plastic or other sponge-like material impregnated with water" and pellets "formed of flexible foam plastic material, such as polyurethane of the open cell type or cellulosic or other material having sponge like properties capable of absorbing water or other liquids" would need to collect shot pellets or risk polluting the environment. *Id*. Foam plastic and sponge-like material particularly in the form of "polyurethane" do not readily biodegrade. *Id*. Even if the ammunition was inexpensive enough to replace, non-biodegradable plastics can harm the environment. In the environmentally conscience world at the time of the invention, one of skill in the art would recognize this as a problem with the toy gun described in Rappaport. *Id*.

DuneCraft offers a solution to this problem because its super absorbent polymer projectiles are biodegradable. Ex. 1003, ¶128. Combining the Rappaport gun with the DuneCraft ammunition leads to a gun that shoots biodegradable pellets. Children playing with the Rappaport gun would not need to collect their shot pellets, a likely impossible task, or worry about the environment. One of skill

in the art would apply the known improvement of using super absorbent ammunition in Rappaport's gun to improve that gun and make using the gun more fun—by not having to collect the pellets—and better for the environment—because most people would not and could not collect all the pellets. *Id*.

One of ordinary skill in the art would recognize that applying the known technique of using super absorbent polymer projectiles in a projectile launcher like Rappaport's toy gun would have yielded predictable results and resulted in an improved system. One of skill in the art would know to improve Rappaport's gun by using the super absorbent polymer projectiles in DuneCraft. Ex. 1003, ¶129. As explained above, the state of the art at the time of the alleged invention included using gel polymers and super absorbents for projectiles in guns like Rappaport's, making the results predictable. *Id.* Carlson shows the predictability of this substitution: "An advantage to being pulp based is that the projectile 100 is more solid than foam and, as such, generally shoots straighter and further than foam." Ex. 1016, 4:1-4; 3:53-56 (pulp can be "a hydro-polymer (similar to the absorbent polymer material used in a diaper)"); Ex. 1003, ¶129. The known technique of using gel or super absorbent projectiles would have predictably led to the use of those projectiles in Rappaport to improve its environmental friendliness. Doing so was within the skill of one of skill in the art. *Id.*

***

One of skill in the art would know to and be motivated to combine Rappaport with DuneCraft by using the DuneCraft Spit Balls as ammunition in Rappaport's gun. Ex. 1003, ¶130. The sections below demonstrate how this combination discloses each element of the claims in this ground.

2. Claim 2 - "wherein the ammunition is disposed within a feed chamber of the projectile launcher."

Claim 2 adds to claim 1 "wherein the ammunition is disposed within a feed chamber of the projectile launcher." In addition to DuneCraft's disclosure of claim 1's limitations described above, Rappaport discloses this claim's added limitation.

Rappaport discloses a "projectile launcher": "to provide a toy gun which is loaded with a stack of pellets formed of flexible, foam plastic or other sponge-like material impregnated with water, the pellets being successfully fired from the gun." Ex. 1006, 2:9-13. Rappaport's gun is thus a "projectile launcher." Ex. 1003, ¶132.

The 282 patent defines a "magazine" as "used herein to refer any container that holds super absorbent polymer projectiles for a projectile toy gun or other projectile weaponry." Ex. 1006, 3:30-32. The 282 patent uses the term "feed hopper" interchangeably with "magazine." Ex. 1001, 6:6-11. In making patent infringement allegations against Petitioner, Patent Owner's exclusive licensee has alleged that a container holding pellets is a "feed chamber." Ex. 1021 at 22-23, 25-

26. Consequently, the "feed chamber" is the "magazine" and its interior, which comprises a chamber. Ex. 1003, ¶133.

Rappaport discloses a "feed chamber" of its "projectile launcher." Ex. 1003, ¶134. Rappaport explains that "[a] significant advantage of the invention is that the toy gun need not be reloaded with a soft missile each time a missile is fired, for the gun includes a cartridge loaded with a stack of soft, wet missiles." Ex. 1006, 2:14-19; *also* 3:17-20. Figure 1 shows the cartridge 12 as part of the launcher with the ammunition 16 in the cartridge:

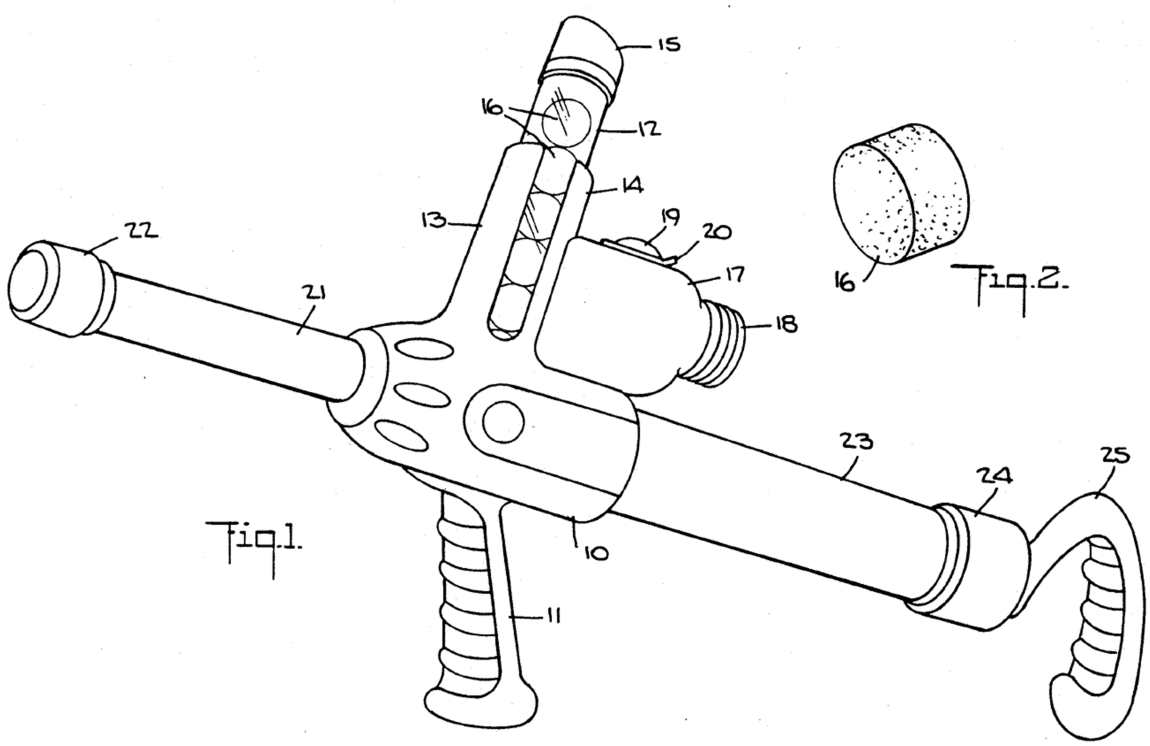

This disclosure shows that the interior of the "cartridge 12," which is the "feed chamber" of the launcher, holds the ammunition ("missiles"), meaning the ammunition is disposed within that feed chamber. Ex. 1003, ¶134.

Rappaport discloses that "the ammunition is disposed within a feed chamber." Rappaport discloses that "the gun includes a cartridge loaded with a stack of soft, wet missiles." Ex. 1006, 2:16-17. The interior of the cartridge, the "feed chamber," has ammunition disposed within it. Ex. 1003, ¶135. Rappaport's ammunition is "disposed within a feed chamber of the projectile launcher." *Id*.

The combination of Rappaport and DuneCraft discloses all the elements of claim 2 and renders it obvious.

3. Claim 3 – "wherein the feed chamber is in selective communication with a barrel of the projectile launcher"

Claim 3 adds to claim 2 "wherein the feed chamber is in selective communication with a barrel of the projectile launcher." In addition to the disclosure of claim 2's limitations described above, Rappaport discloses this claim's added limitation.

Rappaport discloses that "the feed chamber is in selective communication with a barrel of the projectile launcher." "When, however, a player pulls out handle 25 so that spring 36 is then compressed as the piston assembly is shifted to a retracted position adjacent the rear end of cylinder 23, then launching bolt 31 is retracted, as shown in FIG. 3, to clear the launching chamber to allow the lowermost wet pellet in the cartridge stack to drop into the chamber. … When the player then releases handle 25, the piston assembly is urged by the expanding spring toward the front end of cylinder 23, and the launching bolt at high velocity

drives the wet pellet then in the launching chamber through barrel 21." Ex. 1006, 4:12-26. This disclosure shows that the "feed chamber" is in "selective communication with a barrel of the projectile launcher" because (1) Rappaport's pellet drops from the cartridge (which has a "feed chamber" as discussed above) into the launching chamber from which the pellet travels to the "barrel," so the cartridge and its internal "feed chamber" are in communication with the barrel of the "projectile launcher"/gun; and (2) the communication is "selective" because, as shown on Fig. 3, the pellets block the entry to the barrel from the cartridge and only drop in after the launching chamber is cleared. Ex. 1003, ¶138.

The combination of Rappaport and DuneCraft discloses all the elements of claim 3 and renders it obvious.

4. Claim 7 – "wherein the super absorbent polymer has a cross linking density sufficient to prevent the soft-projectiles from breaking apart when launched from the projectile launcher"

Claim 7 adds to claim 2 "wherein the super absorbent polymer has a cross linking density sufficient to prevent the soft-projectiles from breaking apart when launched from the projectile launcher." In addition to the disclosure of claim 2's limitations described above, DuneCraft discloses this claim's added limitation.

DuneCraft discloses that its Spit Balls "Will bounce and/or explode into mushy parts on impact (depending on the force you throw them)" and that "when the war is over, collect all the whole ones and let them dry out." Ex. 1007. Given

that the Spit Balls can be reused and are intended to explode on impact, if at all, one of skill in the art would know that the Spit Balls do not break apart when launched from a projectile launcher, which can be the spitball tube or the arm/hand using to throw them. Ex. 1003, ¶141. This disclosure teaches that when using DuneCraft Spit Balls in Rappaport's gun, one would similarly not want them to explode when launched. *Id.* One of skill in the art would also know that in designing a toy gun, the projectiles should not break apart when launched from the gun. *Id.*

Claim 7 utilizes functional claiming in that it requires only that the super absorbent have "a cross linking density sufficient to prevent the soft-projectiles from breaking apart when launched from the projectile launcher." The claim requires only that the super absorbent projectile perform the function of not breaking up and recites no specific levels of cross linking to make that happen. The DuneCraft super absorbent polymer balls satisfy this limitation because the cross linking density of the DuneCraft polymer is sufficient to prevent the projectile from breaking apart when launched. Ex. 1003, ¶142. And one of skill in the art would know from such teaching to use a cross linking density in Rappaport's gun such that the projectile did not break apart on launch. *Id.*

The combination of Rappaport and DuneCraft disclose all the elements of claim 7 and render it obvious.

5. Claim 8

Claim 8 reads: "A projectile launcher including the ammunition of claim 1 disposed within a feed chamber of the projectile launcher, and wherein the projectile launcher is adapted to load a soft-projectile from the feed chamber to a firing position." In addition to DuneCraft's disclosure of claim 1's limitations described above, Rappaport discloses this claim's added limitations.

Rappaport discloses a "projectile launcher": "provide a toy gun which is loaded with a stack of pellets formed of flexible, foam plastic or other sponge-like material impregnated with water, the pellets being successfully fired from the gun." Ex. 1006, 2:9-13. Rappaport's gun is thus a "projectile launcher." Ex. 1003, ¶145

DuneCraft discloses the "ammunition of claim 1" in the form of the soft-projectile made from super absorbent polymer, as described above for claim 1. The combination therefore "include[es] the ammunition of claim 1."

Rappaport's ammunition is "disposed within a feed chamber of the projectile launcher." Ex. 1003, ¶147. This element appears in claim 2, and Rappaport discloses it for the reasons given for that claim.

Rappaport also discloses "wherein the projectile launcher is adapted to load a soft-projectile from the feed chamber to a firing position" by explaining that "another missile drops into the chamber in readiness to be fired" from the

cartridge. Ex. 1006, 2:14-19; Ex. 1003, ¶148. Rappaport's gun is "adapted to load a soft-projectile from the feed chamber to a firing position" by being built to drop the missile from the cartridge into the chamber where it is in position to be fired. *Id.*

The combination of Rappaport and DuneCraft discloses all the elements of this claim and therefore renders it obvious.

6. Claim 9 – "wherein the projectile launcher is a toy"

Claim 9 adds to claim 8 "wherein the projectile launcher is a toy." In addition to the disclosure of claim 8's limitations described above, Rappaport discloses this claim's added limitation.

Rappaport discloses a toy gun. Ex, 1003, ¶151. Rappaport discloses that its "invention relates generally to toy weapons, and more particularly to a toy gun adapted to shoot out innocuous soft pellets…" Ex. 1006, 1:7-9.

The combination of Rappaport and DuneCraft discloses all the elements of this claim and renders it obvious.

7. Claim 10 – "wherein the projectile launcher is in the shape of a gun"

Claim 10 adds to claim 8 "wherein the projectile launcher is in the shape of a gun." In addition to DuneCraft's disclosure of claim 8's limitations described above, Rappaport discloses this claim's added limitation.

Rappaport discloses a toy projectile launcher in the shape of a gun. Ex. 1003, ¶154. Rappaport discloses "a toy gun adapted to shoot out innocuous soft pellets…" Ex. 1006, 1:7-9; see also 2:3-13, 2:20-22, 3:11-15. Rappaport's figures, such as Fig. 1 reproduced below, show a launcher in the "shape of a gun." Ex. 1003, ¶154.

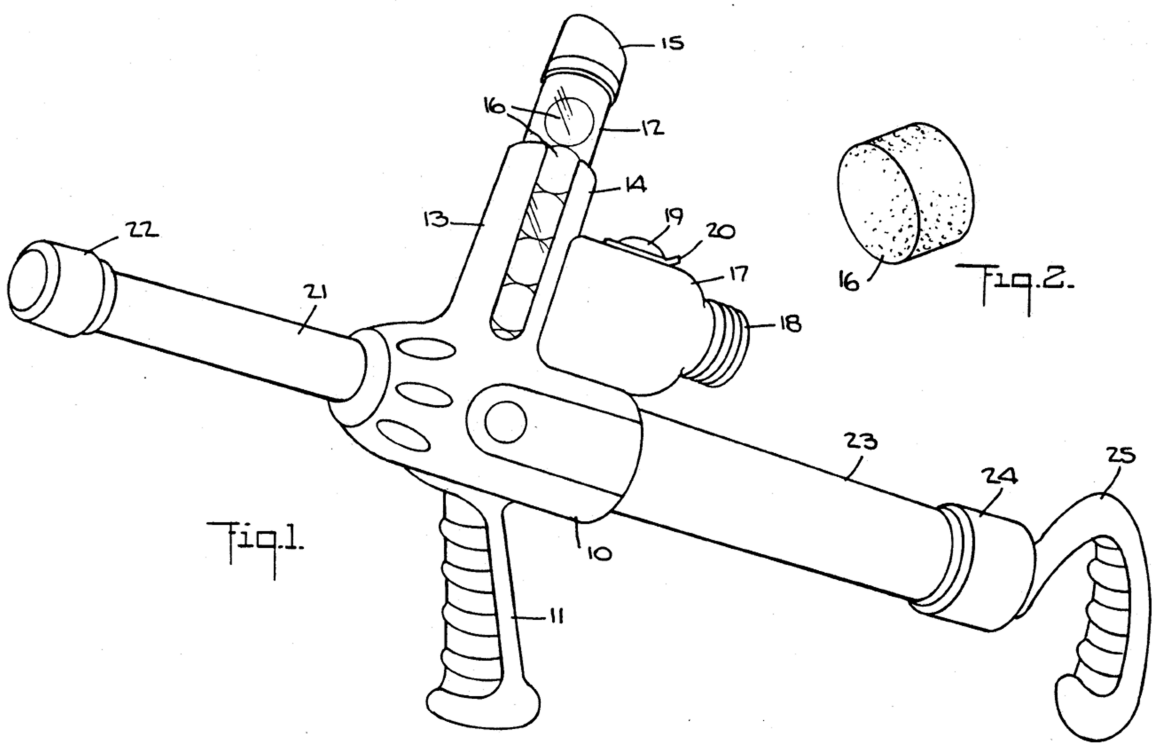

The combination of Rappaport and DuneCraft discloses all the elements of this claim and renders it obvious.

8. Claim 11 – "wherein the feed chamber is provided within a magazine"

Claim 11 adds to claim 8 "wherein the feed chamber is provided within a magazine." In addition to the disclosure of claim 8's limitations described above, Rappaport discloses this claim's added limitation.

The 282 patent defines a "magazine" as "used herein to refer any container that holds super absorbent polymer projectiles for a projectile toy gun or other projectile weaponry." Ex. 1001, 3:30-32. The 282 patent uses the term "feed hopper" interchangeably with "magazine." Ex. 1001, 6:6-11. In making patent infringement allegations against Petitioner, Patent Owner's exclusive licensee has alleged that a container holding pellets is a "feed chamber." Ex. 1021 at 22-23, 25-26. Consequently, the "feed chamber" "provided within a magazine" is the interior of the magazine. Ex. 1003, ¶157.

Rappaport discloses "the feed chamber is provided within a magazine." Ex. 1003, ¶158. Rappaport discloses ammunition within its cartridge. "A significant advantage of the invention is that the toy gun need not be reloaded with a soft missile each time a missile is fired, for the gun includes a cartridge loaded with a stack of soft, wet missiles." Ex. 1006, 2:14-19; *also* 3:17-20. Rappaport's "cartridge" is the claimed "magazine" in that it is a container that holds the projectiles ("missiles"). Ex. 1003, ¶158. The cartridge's interior contains the "missiles" and thus is the feed chamber. *Id*. Rappaport thus discloses "the feed chamber is provided within a magazine."

The combination of Rappaport and DuneCraft discloses all the elements of this claim and renders it obvious.

9. Claim 12 – "wherein the soft-projectiles are substantially spherical"

Claim 12 adds to claim 8 "wherein the soft-projectiles are substantially spherical." In addition to the disclosure of claim 8's limitations described above, DuneCraft discloses this claim's added limitation for the reasons given above for claim 4 of Ground 1.

The combination of Rappaport and DuneCraft discloses all the elements of this claim and renders it obvious. Ex. 1003, ¶160-61.

10. Claim 13 – "wherein the super absorbent polymer has a cross linking density sufficient to prevent the soft-projectiles from breaking apart when launched from the projectile launcher"

Claim 13 adds to claim 8 "wherein the super absorbent polymer has a cross linking density sufficient to prevent the soft-projectiles from breaking apart when launched from the projectile launcher." In addition to the disclosure of claim 8's limitations described above, DuneCraft discloses this claim's added limitations for the same reasons given for claim 7.

The combination of Rappaport and DuneCraft discloses all the elements of this claim and renders it obvious. Ex. 1003, ¶162-63.

11. Claim 14 – "wherein the projectile launcher is designed to use air pressure to launch the soft-projectiles"

Claim 14 adds to claim 8 "wherein the projectile launcher is designed to use air pressure to launch the soft-projectiles." In addition to the disclosure of claim 8's limitations described above, Rappaport discloses this claim's added limitations.

Rappaport discloses: "[w]hen, therefore, the handle of the weapon is pulled back by the player to retract piston 37 and in doing so compresses spring 36, and the handle is then released, the piston is advanced at a high velocity by the expanding spray toward front end collar 38. The advancing piston abruptly compresses the air between the piston and the wet pellet blocking air port 39 in collar 38. The resultant pulse of compressed air acts to propel pellet 16 through barrel 40 from which it is discharged. When a pulse of air fires the lowermost pellet, the next pellet in the stack drops into place in the launching chamber." Ex. 1006, 5:36-47. This quotation describes the toy gun being designed to use air pressure ("a pulse of air") to launch ("fires") the soft-projectiles ("pellet 16"). Ex. 1003, ¶165. Rappaport's gun "is designed to use air pressure to launch the soft-projectiles." *Id.*

The combination of Rappaport and DuneCraft discloses all the elements of this claim and renders it obvious.

12. Claim 16 – "further comprising a firing mechanism that is incapable of storing energy independent of a user"

Claim 16 adds to claim 8 "further comprising a firing mechanism that is incapable of storing energy independent of a user." In addition to the disclosure of claim 8's limitations described above, Rappaport discloses this claim's added limitation.

Rappaport discloses: "to fire this pellet, the player must pull out handle 25 as far as it will go. This action causes launching bolt 31 to clear the launching chamber to permit the lowermost wet pellet in the stack loaded in the gravity feed cartridge to drop into chamber 10, this pellet being then adjacent the tip of the launching bolt. … The player then releases the handle, causing the advancing bolt to drive the first pellet through the barrel from which it is discharged. Before releasing the handle, the player aims the barrel at a selected target, so that when the handle is released and the pellet is fired, it is directed toward this target." Ex. 1006, 4:39-51; *also* 5:37-45. This "firing mechanism" describes a gun that is incapable of storing energy independent of the user because the user must hold the spring loaded handle 25 for the energy to stay stored (see Ex. 1006, 4:12-20), and when that user releases the handle, the energy is released and the gun fired. Ex. 1003, ¶168. The Rappaport gun cannot store the energy that the user input into the system by pulling back the handle, as demonstrated by Rappaport's description of

what happens when the user releases the handle, and thus is incapable of storing energy independent of a user. *Id*.

The combination of Rappaport and DuneCraft discloses all the elements of this claim and renders it obvious.

13. Claim 17- "further comprising a firing mechanism that directly applies a force to a soft-projectile located in the firing position to launch the soft-projectile from the projectile launcher in free flight"

Claim 17 adds to claim 8 "further comprising a firing mechanism that directly applies a force to a soft-projectile located in the firing position to launch the soft-projectile from the projectile launcher in free flight." In addition to the disclosure of claim 8's limitations described above, Rappaport discloses this claim's added limitations.

Rappaport discloses: "When a player pulls out the handle, the piston is then at its retracted position and the spring is compressed; and when the handle is released, the expanding spring then advances the piston toward the front end of the cylinder. Projecting from the piston through the chamber and into the barrel is a launching bolt which in the retracted position of the piston cleans the chamber to permit the lowermost wet pellet in the stack to drop therein. When the handle is released, the bolt then drives this pellet through the barrel from which it is discharged toward a target in line with the barrel." Ex. 1006, 2:39-49; *also* 4:21-27; 4:46-48.

Rappaport's "firing mechanism" "directly applies a force to a soft-projectile" via a "launching bolt" ("bolt then drives this pellet through the barrel"), which hits and thus directly applies force to the pellet to launch it. Ex. 1003, ¶172. The pellet is "located in the firing position" (the bottom pellet 16 in Fig. 3) before being launched "from the projectile launcher in free flight" ("drives the wet pellet then in the launching chamber through barrel 21 from which it is discharged toward a target in line with the barrel"). *Id*.

In addition to DuneCraft's soft-projectiles, Rappaport discloses that the "wet pellet" described above is a "soft-projectile." Ex. 1006, 1:9-11 ("a toy gun adapted to shoot out innocuous soft pellets formed of flexible foam plastic material impregnated with water"); 2:14-19; Ex. 1003, ¶173.

The combination of Rappaport and DuneCraft discloses all the elements of this claim and renders it obvious.

14. Claim 18 – "further comprising a firing mechanism that indirectly applies a force to a soft-projectile located in the firing position to launch the soft-projectile from the projectile launcher in free flight"

Claim 18 adds to claim 8 "further comprising a firing mechanism that indirectly applies a force to a soft-projectile located in the firing position to launch the soft-projectile from the projectile launcher in free flight." In addition to the disclosure of claim 8's limitations described above, Rappaport discloses this claim's added limitations.

Rappaport discloses: "the arrangement is such as to pneumatically drive the pellet by a blast of air produced by the advancing piston, thereby obviating the need for a launching bolt to mechanically drive the wet pellet." Ex. 1006, 2:50-54; *also* 5:37-45.

Rappaport's "firing mechanism" acts to "pneumatically drive the pellet by a blast of air," which "indirectly applies a force to a soft-projectile" (the pellet) using compressed air. Ex. 1003, ¶177. Rappaport also discloses when using this "firing mechanism," a "resultant pulse of compressed air acts to propel pellet 16," which also "indirectly applies a force" to fire the pellet. *Id.* And the pellet is "located in the firing position," in front of the "air port 39 in collar 38" as shown in Fig. 7 and described as "the wet pellet blocking air port 39 in collar 38." *Id*. The indirect force of air "propel[s] pellet 16 through barrel 40 from which it is discharged," which means the pellet is launched "from the projectile launcher in free flight." *Id*.

In addition to the soft-projectiles in DuneCraft, Rappaport discloses that the "wet pellet" described in the quote above is a "soft-projectile." Ex. 1006, 1:9-11; 2:14-19; Ex. 1003, ¶178.

The combination of Rappaport and DuneCraft discloses all the elements of this claim and renders it obvious.

15. Claim 19

Claim 19 adds the following to the limitations in claim 8:

19. The projectile launcher of claim 8, further comprising:

an air compression chamber;

a piston disposed within and axially aligned with the air compression chamber, and

a spring operatively arranged to bias the piston toward a rest position from a cocked position within the air compression chamber.

The limitations of claim 8 are disclosed by the combination of Rappaport and DuneCraft described above, and Rappaport discloses this claim's added limitations.

Rappaport discloses "an air compression chamber." Rappaport discloses: "[w]hen, therefore, the handle of the weapon is pulled back by the player to retract piston 37 and in doing so compresses spring 36, and the handle is then released, the piston is advanced at a high velocity by the expanding spray toward front end collar 38. The advancing piston abruptly compresses the air between the piston and the wet pellet blocking air port 39 in collar 38. The resultant pulse of compressed air acts to propel pellet 16 through barrel 40 from which it is discharged." Ex. 1006, 5:37-45. The chamber between the retracted piston 37 and its end position at front end collar 38 is the "air compression chamber," labeled as "cylinder 23." Ex. 1003, ¶181. Fig. 7 shows the post-release, relaxed position:

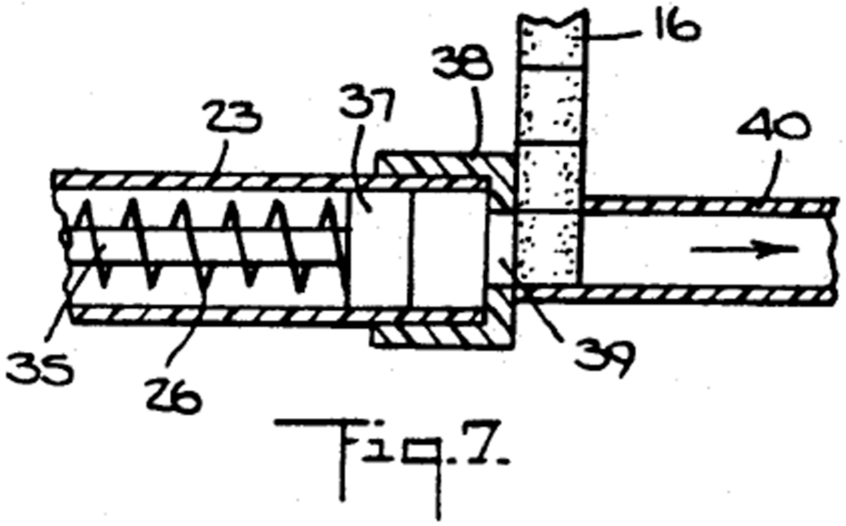

Rappaport discloses "a piston disposed within and axially aligned with the air compression chamber." Rappaport discloses, also with reference to Fig. 7, that "piston rod 35 is connected to a piston 37 which slides along the inner surface of cylinder 23, but so engages this surface as to minimize air leakage. Hence as the piston advances, it compresses the air between the piston and a cap 38 attached to the front end of cylinder 23. Cap 38 is provided with a central air port 39 which is blocked by the lowermost wet pellet 16 dropped from the cartridge into the launching chamber. A barrel 40 is coupled to the output of this chamber." Ex. 1006, 5:27-36. As this quote explains and Fig. 7 shows, the "piston 37" is disposed within and axially aligned with the air compression chamber 23 ("cylinder"). Ex. 1003, ¶182. The 282 patent shows a similar "air compression chamber" as element 31 on, for example, Fig 2. *Id.*; Ex. 1001, Fig. 2.

Rappaport discloses "a spring operatively arranged to bias the piston toward a rest position from a cocked position within the air compression chamber." Rappaport describes role of the spring: "When a player pulls out the handle, the piston is then at its retracted position and the spring is compressed; and when the handle is released, the expanding spring then advances the piston toward the front end of the cylinder." Ex. 1005, 2:39-43. The spring is "operatively arranged" to "bias the piston" ("advance[] the piston") toward a "rest position" ("the front end of the cylinder," near element 39) from a "cocked position" (the "retracted position") "within the air compression chamber" (cylinder 23). Ex. 1003, ¶183. Rappaport connects element 26 in Fig. 7 to the spring: "[t]he modified weapon structure shown somewhat schematically in FIG. 7 is similar to that in FIGS. 1 to 6 and includes a pump-operated water supply for the cartridge in which the dry pellets are loaded as well as a cylinder 23 and a piston rod 35 terminating in a handle and surrounded by a helical spring 26." Ex. 1006, 5:21-26; Ex. 1003, ¶183.

The combination of Rappaport and DuneCraft discloses all the elements of this claim and renders it obvious.

16. Claim 20

Claim 20 adds the following to claim 19: "further comprising a smaller diameter tube in communication with the air compression chamber, and wherein a biasing force of the spring is sufficient to cause the piston to move from the cocked

position to the rest position to force air from the air compression chamber into the smaller diameter tube and cause a soft-projectile located at the firing position to accelerate and be launched from the projectile launcher." In addition to the disclosure of claim 19's limitations described above, Rappaport discloses this claim's added limitations.

Rappaport discloses "a smaller diameter tube in communication with the air compression chamber." Rappaport discloses: "[w]hen, therefore, the handle of the weapon is pulled back by the player to retract piston 37 and in doing so compresses spring 36, and the handle is then released, the piston is advanced at a high velocity by the expanding spray toward front end collar 38. The advancing piston abruptly compresses the air between the piston and the wet pellet blocking air port 39 in collar 38. The resultant pulse of compressed air acts to propel pellet 16 through barrel 40 from which it is discharged." Ex. 1006, 5:37-45. As Fig. 7 shows, barrel 40 is a "smaller diameter tube" (compared to cylinder 23) "in communication with the air compression chamber" ("cylinder 23"), through "air port 39," which in this figure is blocked by a pellet 16, which has fallen into the barrel to prepare for the next launch, but which allows air to flow from cylinder 23 to barrel 40. Ex. 1003, ¶186.

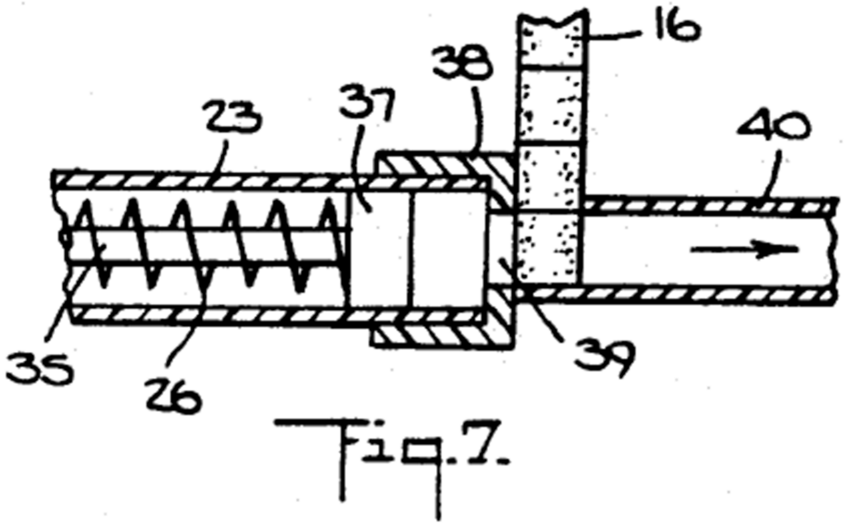

Rappaport discloses "a biasing force of the spring is sufficient to cause the piston to move from the cocked position to the rest position to force air from the air compression chamber into the smaller diameter tube and cause a soft-projectile located at the firing position to accelerate and be launched from the projectile launcher." Rappaport discloses "[w]hen, therefore, the handle of the weapon is pulled back by the player to retract piston 37 and in doing so compresses spring 36, and the handle is then released, the piston is advanced at a high velocity by the expanding spray toward front end collar 38. The advancing piston abruptly compresses the air between the piston and the wet pellet blocking air port 39 in collar 38. The resultant pulse of compressed air acts to propel pellet 16 through barrel 40 from which it is discharged." Ex. 1005, 5:37-45.

The "biasing force of the spring" ("compresses spring 36") after being pulled back by the player, when released, "is sufficient to cause" the piston 37 to "move from the cocked position" ("retract piston 37") "to the rest position" (at front end collar 38) which "force[s] air from the air compression chamber" (cylinder 23) "into the smaller diameter tube" (barrel 40) through "air port 39" and which "cause[s] a soft-projectile located at the firing position" ("wet pellet blocking air port 39") "to accelerate and be launched from the projectile launcher" ("propel pellet 16 through barrel 40 from which it is discharged"). Ex. 1003, ¶188. In addition to DuneCraft's soft-projectiles, the Rappaport projectile is a "soft-projectile" for the reasons described above. *Id.*

The combination of Rappaport and DuneCraft discloses all the elements of this claim and renders it obvious.

17. Claim 21 – "wherein the absorbency of the super absorbent polymer is sufficiently limited to allow the soft-projectiles to be launched from the projectile launcher without breaking apart"

Claim 21 adds to claim 8 "wherein the absorbency of the super absorbent polymer is sufficiently limited to allow the soft-projectiles to be launched from the projectile launcher without breaking apart." In addition to the disclosure of claim 8's limitations described above, DuneCraft discloses this claim's added limitations.

This claim is similar to claim 7, discussed above. Claim 21 is a functional claim in that it requires only that "the absorbency of the super absorbent polymer is

sufficiently limited to allow the soft-projectiles to be launched from the projectile launcher without breaking apart." The absorbent polymer disclosed in DuneCraft satisfies this limitation because the "absorbency of the super absorbent polymer is sufficiently limited to allow the soft-projectiles to be launched from the projectile launcher" (the cartoon tube shown on the packaging or by being thrown) "without breaking apart." Ex. 1003, ¶191. When using those Spit Balls in Rappaport, one of skill in the art would similarly want the projectiles not to break apart. *Id.*

The combination of Rappaport and DuneCraft discloses the element added in this dependent claim and renders it obvious.

C. Ground 3: Claims 8 and 15 Are Obvious Over Illuzzi in View of DuneCraft

1. One of Skill in The Art Would Combine Illuzzi with DuneCraft

Illuzzi discloses a toy gun but does not disclose using "super absorbent polymer" as claimed in claim 1, which is the parent to claim 8 (and grandparent to claim 15). DuneCraft discloses "soft projectile[s] being formed from hydrated super absorbent polymer" as described above for claim 1.

One of skill in the art would know to combine Illuzzi and DuneCraft to use the hydrated super absorbent polymer projectiles from DuneCraft in Illuzzi's gun. Ex. 1003, ¶194. Illuzzi discloses a "projectile gun 100" that can use spherical projectiles. Ex. 1011, ¶0067 ("It has a spherical front view and a spherical side

view surface 121, and is indeed a sphere.”). Illuzzi also discloses making such projectiles from “polymer.” Ex. 1011, ¶0094 (“FIG. 46 illustrates a cut view of a projectile 460 having a construction of a single material 461”); ¶0095, Table (Figure/Item/Material: 46/461/Polymer”). Illuzzi explains that these projectiles are “solid” and then explains that “[b]y ‘solid’ is meant having no liquid, and includes dense, hard materials as well as soft porous materials. These solid projectiles could be foam, plastic, cork, wood, or other material or combinations thereof.” Ex. 1011, ¶0017. Illuzzi further discloses that its projectiles can be “soft” (¶0024 (“plurality of soft liquid-free projectiles”)), like the “squishy” projectiles in DuneCraft. Ex. 1003, ¶194.

One of skill in the art would know to substitute DuneCraft’s polymer balls for the polymer balls in Illuzzi to improve safety (as described in Section VI.B.1) and because doing so is nothing more than a simple substitution of one known element for another to obtain predictable results. Ex. 1003, ¶195. The results of putting DuneCraft’s balls into Illuzzi would result in predictable results because Illuzzi already says to use soft, polymer spheres with its paintball gun. Because both DuneCraft and Illuzzi disclose launching soft “polymer” spheres it would be obvious to substitute one projectile for the other. *Id*. One of skill in the art would know to make this substitution based on their knowledge of the state of the art as shown by the Kim application, Cake, and Carlson. *Id.*; Exs. 1013, 1014, 1016.

From Illuzzi's disclosure of a soft polymer spherical projectile, it would be obvious to try DuneCraft's polymer balls. Ex. 1003, ¶196. There are only so many different kind of soft polymer balls used in the art as projectiles for launching (as shown by Carlson and Cake). One of skill in the art would have tried these different potential solutions with a reasonable expectation of success. *Id.*

Using DuneCraft Spit Balls in Illuzzi's gun would also improve the gun by making it more environmentally friendly in the same manner described for improving Rappaport's gun described in Section VI.B.1. Ex. 1003, ¶197.

The evidence that one of skill in the art would know to combine a gun, and in particular a toy gun, such as Illuzzi's, with a gel or polymer ball, including a super absorbent ball, like DuneCraft's, is the same as that discussed above for the combination of Rappaport and DuneCraft. *See* Section VI.B.1; Ex. 1003, ¶198. Carlson, Cake, and the Kim application demonstrate that one of skill in the art would have known to use DuneCraft's super absorbent polymer Spit Balls in Illuzzi's toy gun. *Id.*

One of skill in the art would have combined Illuzzi with DuneCraft to use the DuneCraft polymer balls in the paintball gun disclosed in Illuzzi. Ex. 1003, ¶199.

2. Claim 8

Claim 8 includes the limitations of claim 1 and adds: "A projectile launcher including the ammunition of claim 1 disposed within a feed chamber of the projectile launcher, and wherein the projectile launcher is adapted to load a soft-projectile from the feed chamber to a firing position." In addition to DuneCraft's disclosure of claim 1 described above, Illuzzi discloses this claim's added limitation.

Illuzzi discloses a "projectile launcher": "The present invention relates to a combination solid projectile and paintball gun. It includes a main housing, a trigger, a barrel, a first projectile port, a second projectile port, means for opening and closing the ports, and an adapter for attachment to the gun for feeding and firing solid projectiles." Ex. 1011, ¶0017. A "paintball gun" is a projectile launcher. Ex. 1003, ¶201.

The ammunition in Illuzzi is "disposed within a feed chamber of the projectile launcher": "Adapter housing 31 contains a plurality of solid projectiles 41 that are fed by gravity individually into paintball feeder port 15 and are subsequently fired with trigger 11 using the force of a compressed gas source 9." Ex. 1011, ¶0053. The "solid projectiles" are the "ammunition," and they are "disposed within a feed chamber of the projectile launcher" by being located inside

the adaptor housing 31. Ex. 1003, ¶202. Figure 2 shows the projectiles 41 inside the adaptor housing 31:

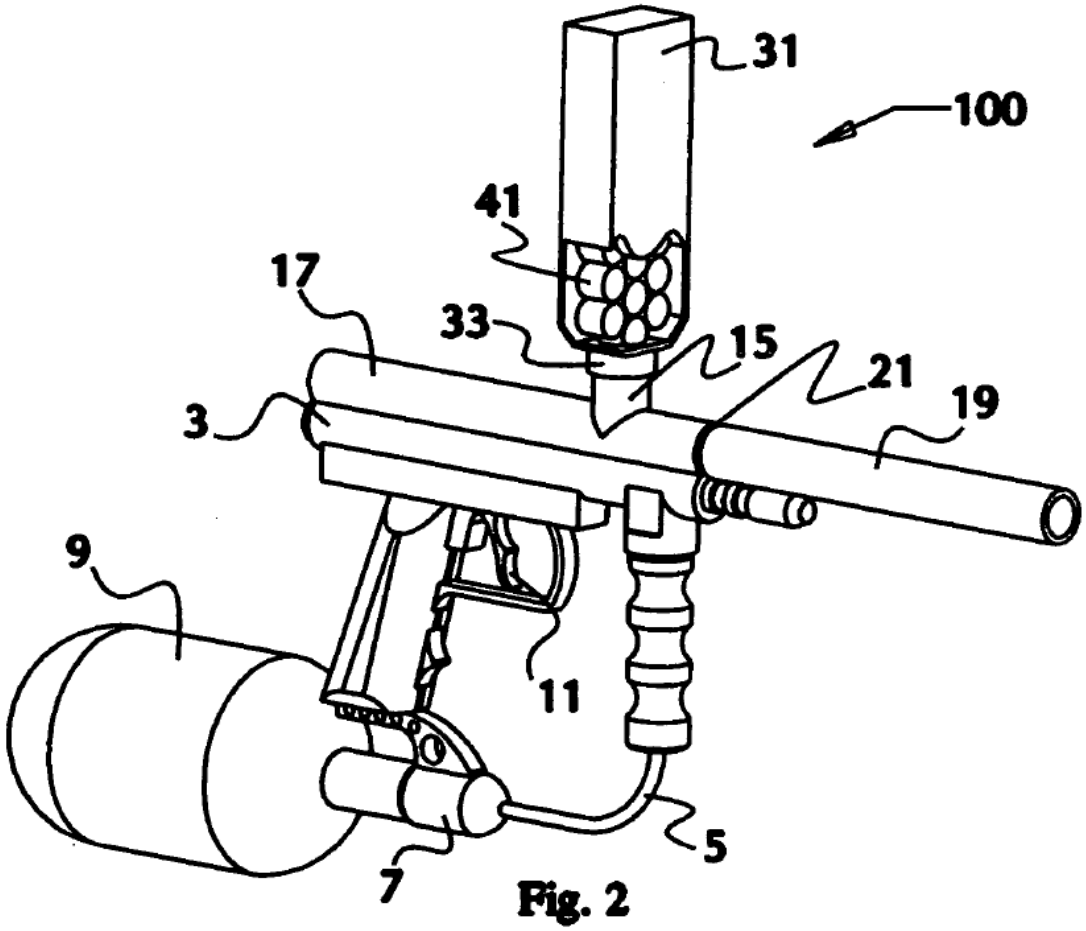

Fig. 2

Figure 2 also shows that the "adaptor housing," which contains the feed chamber, is "of the projectile launcher" in that it is connected to the "projectile gun 100" and feeds the projectiles to that launcher/gun. *Id*.

Illuzzi discloses "the projectile launcher [] adapted to load a soft-projectile from the feed chamber to a firing position." In addition to Fig. 2, Illuzzi discloses that "Adapter housing 31 contains a plurality of solid projectiles 41 that are fed by gravity individually into paintball feeder port 15." Ex. 1011, [0053]. Thus, Illuzzi's

gun ("projectile launcher") is adapted to load soft-projectiles ("solid projectiles 41") from the feed chamber ("adaptor housing 31") to a firing position ("fed by gravity individually into paintball feeder port 15 and are subsequently fired with trigger 11 using the force of a compressed gas source 9"). Ex. 1003, ¶203.

DuneCraft discloses the "ammunition of claim 1" in the form of the soft-projectile made from super absorbent polymer, described above for claim 1. *Id.*, ¶204.

The combination of Illuzzi and DuneCraft discloses the elements in this claim and its parent claim 1 and therefore renders it obvious.

3. Claim 15 – "comprising a firing mechanism that stores energy independent of a user"

Claim 15 adds to claim 8 "further comprising a firing mechanism that stores energy independent of a user." Claim 8 is disclosed by the combination of Illuzzi and DuneCraft described above, and Illuzzi discloses this claim's added limitations.

Claim 15 recites "a firing mechanism that stores energy independent of a user." One of skill in the art would readily realize that this claim describes a trigger, which is a well-known way of storing energy in both real and toy guns. Ex. 1003, ¶207.

Illuzzi discloses: "Trigger 11 is functionally connected to the valve so that when the trigger is pulled, a burst of pressurized gas expands to move the piston to

its firing position. The piston will allow a slug of air to travel a relatively short distance at an extremely high velocity. Paintballs are stored in conventional hopper 13 and are fed individually into paintball feeder port 15 and hence into the bore of tube 17. When trigger 11 is pulled, a paintball is fired through barrel 19. Barrel 19 has threads at upstream end 21 for connection and removal to housing 3's tube 17." Ex. 1011, ¶0052; ¶0053. Illuzzi's "firing mechanism" uses "pressurized gas" to fire a paintball. The pressure under which this gas is held represents energy stored independently of the user. Ex. 1003, ¶208. Thus, Illuzzi's "firing mechanism," which includes the trigger, pressurized gas, piston, and barrel, "stores energy independently of the user." *Id*.

The combination of Illuzzi and DuneCraft discloses the elements of this claim and renders it obvious.

Dated: December 5, 2022 Respectfully Submitted,

/ Scott W. Doyle /

Scott W. Doyle
Registration No. 39,176
Kelley Drye & Warren LLP
Washington Harbour, Suite 400
3050 K Street, NW
Washington, DC 20007
TEL (202) 342-8400
FAX (202) 342-8451

PETITION FOR INTER PARTES REVIEW

OF U.S. PATENT NO. 8,371,282

Attachment A:

Proof of Service of the Petition

CERTIFICATE OF SERVICE

I hereby certify that on December 5, 2022, a copy of this Petition, including all attachments, appendices and exhibits, has been served in its entirety by Federal Express on the following counsel of record for patent owner and on patent owner:

Stephen Ashley
Aird & McBurney LP
Brookfield Place
181 Bay Street, Suite 1800
Toronto, ON M5J 2T9
CANADA

Spin Master, Inc.
300 International Drive, Suite 1000
Williamsville, New York 14221

Spin Master Inc.
5880 W. Jefferson Blvd.
Los Angeles, CA 90016

Megan J. Redmond
Adam P. Seitz
Carrie A. Bader
Tyler Knox
ERISE IP
7015 College Blvd., Ste. 700
Overland Park, KS 66211
Phone: (973) 777-5600

Dated: December 5, 2022

Respectfully Submitted,
/ Scott W. Doyle /
Scott W. Doyle
Registration No. 39,176
Kelley Drye & Warren LLP
Washington Harbour, Suite 400
3050 K Street, NW
Washington, DC 20007

TEL (202) 342-8400
FAX (202) 342-8451

PETITION FOR INTER PARTES REVIEW

OF U.S. PATENT NO. 8,371,282

Attachment B:

List of Evidence and Exhibits Relied Upon in Petition

Exhibit #	Reference Name
1001	U.S. Patent No. 8,371,282
1002	File History of U.S. Patent No. 8,371,282
1003	Declaration of Guerry Grune, Ph.D.
1004	Curriculum Vitae of Guerry Grune, Ph.D.
1005	This exhibit intentionally left blank.
1006	U.S. Patent No. 5,241,944 ("Rappaport")
1007	Declaration from archive.org and webpage describing DuneCraft Spit Balls, archived at archive.org, from https://web.archive.org/web/20091127080602/http://www.thinkgeek.com/geektoys/science/cd32/
1008	This exhibit intentionally left blank.
1009	Declaration from archive.org and webpage showing the packaging of the DuneCraft SpitBalls, archived at archive.org, from https://web.archive.org/web/20091128071922/http://www.thinkgeek.com/geektoys/science/cd32/zoom/
1010	This exhibit intentionally left blank.
1011	U.S. Patent Application No. 2006/0180134A1 ("Illuzzi")
1012	KR20100004855U ("Kim application")
1013	Certified translation of KR20100004855U ("Kim application")
1014	Declaration from archive.org and webpage describing "Things To Shoot" ("Cake") archived at archive.org, from https://web.archive.org/web/20090206231446/https://www.aaroncake.net/spuds/things.asp
1015	This exhibit intentionally left blank.
1016	U.S. Patent No. 8,584,589 ("Carlson")
1017	ITC Complaint (public version)
1018	Certificate of Service

1019	Complainants' Notice Of Patent Priority Dates And Dates Of Conception in Inv. No. 337-TA-1325
1020	Joint Claim Construction Chart in Inv. No. 337-TA-1325
1021	Hasbro's Answer, Affirmative Defenses, and Counterclaims in Civil Action No. 1:22-cv-00828-LY (W.D. Texas)
1022	https://www.cpsc.gov/Recalls/2012/dunecraft-recalls-water-balz-skulls-orbs-and-flower-toys-due-to-serious-ingestion