Used in Lieu of PTO/SB/08A/B
(Based on PTO 10-07 version)

Substitute for form 1449/PTO

INFORMATION DISCLOSURE STATEMENT BY APPLICANT

(Use as many sheets as necessary)

Sheet	1	of	1

Complete if Known	
Application Number	Not Yet Assigned
Filing Date	Concurrently Herewith
First Named Inventor	Keith G. Meggs
Art Unit	Not Yet Assigned
Examiner Name	Not Yet Assigned
Attorney Docket Number	H6845.1001-US-B

U.S. PATENT DOCUMENTS

Examiner Initials*	Cite No.[1]	Document Number Number-Kind Code[2] (*if known*)	Publication Date MM-DD-YYYY	Name of Patentee or Applicant of Cited Document	Pages, Columns, Lines, Where Relevant Passages or Relevant Figures Appear
	AA*	3,408,997	11-05-1968	Ruymbecke	
	AB*	3,472,218	10-14-1969	La Mers	
	AC*	3,631,555	01-04-1972	Hurst et al.	
	AD*	4,834,059	05-30-1989	Moorhouse et al.	
	AE*	5,697,179	12-16-1997	Vanmoor	
	AF*	6,386,293	05-14-2002	Bartlett	
	AG*	5,285,765	02-15-1994	Lee	
	AH*	5,622,159	04-22-1997	Liu et al.	
	AI*	7,004,813	02-28-2006	Zuloff	
	AJ*	2009-0145412	06-11-2009	Barish	
	AK*	71,162	11-19-1867	Hall	

FOREIGN PATENT DOCUMENTS

Examiner Initials*	Cite No.[1]	Foreign Patent Document Country Code[3]-Number[4]-Kind Code[5] (*if known*)	Publication Date MM-DD-YYYY	Name of Patentee or Applicant of Cited Document	Pages, Columns, Lines, Where Relevant Passages Or Relevant Figures Appear	T[6]
	BA*	EP-2253375-A1	11-24-2010	Nippon Catalytic Chem Ind		
	BB*	GB-316,645	01-04-1972	Herlach et al.		

*EXAMINER: Initial if reference considered, whether or not citation is in conformance with MPEP 609. Draw line through citation if not in conformance and not considered. Include copy of this form with next communication to applicant. * CITE NO.: Those application(s) which are marked with an single asterisk (*) next to the Cite No. are not supplied (under 37 CFR 1.98(a)(2)(iii)) because that application was filed after June 30, 2003 or is available in the IFW. [1] Applicant's unique citation designation number (optional). [2] See Kinds Codes of USPTO Patent Documents at www.uspto.gov or MPEP 901.04. [3] Enter Office that issued the document, by the two-letter code (WIPO Standard ST.3). [4] For Japanese patent documents, the indication of the year of the reign of the Emperor must precede the serial number of the patent document. [5] Kind of document by the appropriate symbols as indicated on the document under WIPO Standard ST.16 if possible. [6] Applicant is to place a check mark here if English language Translation is attached.

NON PATENT LITERATURE DOCUMENTS

Examiner Initials*	Cite No.[1]	Include name of the author (in CAPITAL LETTERS), title of the article (when appropriate), title of the item (book, magazine, journal, serial, symposium, catalog, etc.), date, page(s), volume-issue number(s), publisher, city and/or country where published.	T[2]
	CA*	International Search Report and Written Opinion for Corresponding PCT Application No. PCT/US2011/066307 dated April 24, 2012	
	CB*	International Search Report and Written Opinion for Corresponding PCT Application No. PCT/US2011/035801 dated October 19, 2011	

*EXAMINER: Initial if reference considered, whether or not citation is in conformance with MPEP 609. Draw line through citation if not in conformance and not considered. Include copy of this form with next communication to applicant.

[1]Applicant's unique citation designation number (optional). [2]Applicant is to place a check mark here if English language Translation is attached.

Examiner Signature		Date Considered	

Electronic Patent Application Fee Transmittal

Application Number:	
Filing Date:	
Title of Invention:	SOFT-PROJECTILE LAUNCHING DEVICE
First Named Inventor/Applicant Name:	KEITH G. MEGGS
Filer:	Richard D. Tuminello/Pia Murphy
Attorney Docket Number:	H6845.1001-B

Filed as Small Entity

Utility under 35 USC 111(a) Filing Fees

Description	Fee Code	Quantity	Amount	Sub-Total in USD($)
Basic Filing:				
Utility filing Fee (Electronic filing)	4011	1	98	98
Utility Search Fee	2111	1	310	310
Utility Examination Fee	2311	1	125	125
Pages:				
Claims:				
Miscellaneous-Filing:				
Petition:				
Patent-Appeals-and-Interference:				

Description	Fee Code	Quantity	Amount	Sub-Total in USD($)
Post-Allowance-and-Post-Issuance:				
Extension-of-Time:				
Miscellaneous:				
			Total in USD ($)	**533**

Electronic Acknowledgement Receipt

EFS ID:	14896601
Application Number:	13761082
International Application Number:	
Confirmation Number:	8512
Title of Invention:	SOFT-PROJECTILE LAUNCHING DEVICE
First Named Inventor/Applicant Name:	KEITH G. MEGGS
Customer Number:	91477
Filer:	Richard D. Tuminello/Pia Murphy
Filer Authorized By:	Richard D. Tuminello
Attorney Docket Number:	H6845.1001-B
Receipt Date:	06-FEB-2013
Filing Date:	
Time Stamp:	20:13:31
Application Type:	Utility under 35 USC 111(a)

Payment information:

Submitted with Payment	yes
Payment Type	Credit Card
Payment was successfully received in RAM	$533
RAM confirmation Number	6856
Deposit Account	
Authorized User	

File Listing:

Document Number	Document Description	File Name	File Size(Bytes)/ Message Digest	Multi Part /.zip	Pages (if apply)

Petitioner Gel-Blaster, Inc. - Ex. 1002, 0001

1	Transmittal of New Application	H6845_1001-US-B_-_New_Transmittal_for_Division_SB_05.pdf	168739 3e24a67e6a50e9bed3a1545a229fd910967ae5df	no	1
Warnings:					
Information:					
2	Application Data Sheet	H6845_1001-B_-_ADS.pdf	109459 1b830d85199d2d7d0fda6e61fc4d67ab828156d6	no	6
Warnings:					
Information:					
This is not an USPTO supplied ADS fillable form					
3		H6845_1001-US-B_-_DIVISIONAL_APP_of_12_777_134_SAP_Launcher_app.pdf	160311 eaaa2c7544179188777cbde897852f06bd472b8e	yes	23
	Multipart Description/PDF files in .zip description				
	Document Description		**Start**	**End**	
	Specification		1	17	
	Claims		18	19	
	Abstract		20	20	
	Drawings-only black and white line drawings		21	23	
Warnings:					
Information:					
4	Transmittal Letter	H6845_1001-US-B_IDS_with_divisional.pdf	141941 0de542c5b95a65a2af382c6dc0542cf726f96b20	no	2
Warnings:					
Information:					
5	Information Disclosure Statement (IDS) Form (SB08)	H6845_1001-US-B_PTO_Form_SB_08.pdf	164804 2d8e5d4ca65db6093d9e3e148032fdf550c340b6	no	1
Warnings:					
Information:					
This is not an USPTO supplied IDS fillable form					
6	Fee Worksheet (SB06)	fee-info.pdf	33188 e80b93261bee7e7c4789cc04448d373f5fb58e18	no	2
Warnings:					
Information:					
		Total Files Size (in bytes):	778442		

This Acknowledgement Receipt evidences receipt on the noted date by the USPTO of the indicated documents, characterized by the applicant, and including page counts, where applicable. It serves as evidence of receipt similar to a Post Card, as described in MPEP 503.

New Applications Under 35 U.S.C. 111
If a new application is being filed and the application includes the necessary components for a filing date (see 37 CFR 1.53(b)-(d) and MPEP 506), a Filing Receipt (37 CFR 1.54) will be issued in due course and the date shown on this Acknowledgement Receipt will establish the filing date of the application.

National Stage of an International Application under 35 U.S.C. 371
If a timely submission to enter the national stage of an international application is compliant with the conditions of 35 U.S.C. 371 and other applicable requirements a Form PCT/DO/EO/903 indicating acceptance of the application as a national stage submission under 35 U.S.C. 371 will be issued in addition to the Filing Receipt, in due course.

New International Application Filed with the USPTO as a Receiving Office
If a new international application is being filed and the international application includes the necessary components for an international filing date (see PCT Article 11 and MPEP 1810), a Notification of the International Application Number and of the International Filing Date (Form PCT/RO/105) will be issued in due course, subject to prescriptions concerning national security, and the date shown on this Acknowledgement Receipt will establish the international filing date of the application.

PTO/AIA/15 (07-12)
Approved for use through 01/31/2014. OMB 0651-0032
U.S. Patent and Trademark Office. U.S. DEPARTMENT OF COMMERCE
Under the Paperwork Reduction Act of 1995, no persons are required to respond to a collection of information unless it displays a valid OMB control number.

UTILITY PATENT APPLICATION TRANSMITTAL

(ONLY FOR NEW NONPROVISIONAL APPLICATIONS UNDER 37 CFR 1.53(B))

Attorney Docket No.	H6845.1001-B
First Inventor	Keith G. Meggs
Title	SOFT-PROJECTILE LAUNCHING DEVICE

APPLICATION ELEMENTS

See MPEP chapter 600 concerning utility patent application contents.

ADDRESS TO: **Commissioner for Patents**
P.O. Box 1450
Alexandria, VA 22313-1450

1. [ ] **Fee Transmittal Form.** (PTO/SB/17 or equivalent)
2. [X] **Applicant claims small entity status.** See 37 CFR 1.27.
3. [X] **Specification.** [*Total Pages* 20]
   Both the claims and abstract must start on a new page
   (For information on the preferred arrangement, see MPEP § 608.01(a))
4. [X] **Drawing(s).** *(35 U.S.C. 113)* [*Total Sheets* 3]
5. **Inventor's Oath or Declaration.** [*Total Sheets*]
   (including substitute statements under 37 CFR 1.64 and assignments serving as an oath or declaration under 37 CFR 1.63(e))
   a. [ ] Newly executed (original or copy)
   b. [ ] A copy from a prior application (37 CFR 1.63(d))
6. [X] **Application Data Sheet.** **See Note below.*
   See 37 CFR 1.76 (PTO/AIA/14 or equivalent)
7. [ ] **CD-ROM or CD-R.** In duplicate, large table or Computer Program *(Appendix)*
   [ ] Landscape Table on CD
8. **Nucleotide and/or Amino Acid Sequence Submission.** *(if applicable, items a. – c. are required)*
   a. [ ] Computer Readable Form (CRF)
   b. Specification Sequence Listing on:
      i. [ ] CD-ROM or CD-R (2 copies); or ii. [ ] Paper
   c. [ ] Statements verifying identity of above copies

ACCOMPANYING APPLICATION PARTS

9. [ ] **Assignment Papers.** (cover sheet & document(s))
   Name of Assignee
10. [ ] **37 CFR 3.73(c) Statement.** *(when there is an assignee)* [ ] **Power of Attorney.**
11. [ ] **English Translation Document.** *(if applicable)*
12. [X] **Information Disclosure Statement.** (PTO/SB/08 or PTO-1449)
    [ ] Copies of citations attached
13. [ ] **Preliminary Amendment.**
14. [ ] **Return Receipt Postcard.** *(MPEP § 503) (Should be specifically itemized)*
15. [ ] **Certified Copy of Priority Document(s.)** *(if foreign priority is claimed)*
16. [ ] **Nonpublication Request.** Under 35 U.S.C.122 (b)(2)(B)(i). Applicant must attach form PTO/SB/35 or equivalent.
17. [ ] Other:

***Note:** (1) Benefit claims under 37 CFR 1.78 and foreign priority claims under 1.55 **must** be included in an Application Data Sheet (ADS).
(2) For applications filed under 35 U.S.C. 111, the application must contain an ADS specifying the applicant if the applicant is an assignee, person to whom the inventor is under an obligation to assign, or person who otherwise shows sufficient proprietary interest in the matter. See 37 CFR 1.46(b).

19. CORRESPONDENCE ADDRESS

[X] The address associated with Customer Number: 91477 ***OR*** [ ] Correspondence address below

Name	David A. Randall DICKSTEIN SHAPIRO LLP				
Address	2049 Century Park East Suite 700				
City	Los Angeles	State	CA	Zip Code	90067-3109
Country	US	Telephone	(310) 772-8300	Email	

Signature	/David A. Randall/	Date	February 6, 2013
Name (Print/Type)	David A. Randall	Registration No. (Attorney/Agent)	37,217

I hereby certify that this paper (along with any paper referred to as being attached or enclosed) is being transmitted via the Office electronic filing system in accordance with 37 CFR § 1.6(a)(4).

Dated: February 6, 2013 Electronic Signature for Pia Murphy: /Pia Murphy/

Application Data Sheet

Inventor Information

Inventor Number::	1
Name Prefix::	Mr.
Given Name::	Keith
Middle Name::	G.
Family Name::	Meggs
City of Residence::	Rancho Palos Verdes
State or Province of Residence::	CA
Country of Residence::	US
Street of mailing address::	6023 Scotmist Drive
City of mailing address::	Rancho Palos Verdes
State or Province of mailing address::	CA
Postal or Zip Code of mailing address::	90275

Inventor Number::	2
Given Name::	Ronald
Family Name::	Brawer
City of Residence::	Manhattan Beach
State or Province of Residence::	CA
Country of Residence::	US
Street of mailing address::	The Maya Group, Inc.
	19823 Hamilton Avenue

City of mailing address::	Torrance
State or Province of mailing address::	CA
Postal or Zip Code of mailing address::	90502

Inventor Number::	3
Name Prefix::	Mr.
Given Name::	Michael
Middle Name::	G.
Family Name::	Hoeting
City of Residence::	Cincinnati
State or Province of Residence::	OH
Country of Residence::	US
Street of mailing address::	3758 Drakewood Drive
City of mailing address::	Cincinnati
State or Province of mailing address::	OH
Postal or Zip Code of mailing address::	45209

Inventor Number::	4
Name Prefix::	Mr.
Given Name::	Neil
Family Name::	Hamilton
City of Residence::	Covington
State or Province of Residence::	KY

Country of Residence::	US
Street of mailing address::	596 Brandtly Ridge
City of mailing address::	Covington
State or Province of mailing address::	KY
Postal or Zip Code of mailing address::	41015

Correspondence Information

Correspondence Customer Number::	91477

Application Information

Application Type::	Regular
Subject Matter::	Utility
CD-ROM or CD-R?::	None
Sequence submission?::	None
Computer Readable Form (CRF)?::	No
Title::	SOFT-PROJECTILE LAUNCHING DEVICE
Attorney Docket Number::	H6845.1001-B
Request for Early Publication?::	No
Request for Non-Publication?::	No
Total Drawing Sheets::	3
Small Entity?::	Yes
Petition included?::	No
Secrecy Order in Parent Appl.?::	No

Authorization to Permit Access:: No

Representative Information

Representative Customer Number:: 91477

Domestic Priority Information

Divisional of prior application no. 12/777,134, filed 05/10/2010

Group Art Unit: 3641 / Examiner: M.D. David

Foreign Priority Information

Applicant Information

The Maya Group, Inc.

19823 Hamilton Avenue

Torrance, CA 90502

Signature:

A signature of the applicant or representative is required in accordance with 37 CFR 1.33 and 10.18. Please see 37 CFR 1.4(d) for the form of the signature.			
Signature	/David A. Randall/	Date	February 6, 2013
Name (Print/Type)	David A. Randall	Registration No. (Attorney/Agent)	37,217

Application No. (if known): Attorney Docket No.: H6845.1001-B

Certificate of Electronic Filing Under 37 C.F.R. § 1.8

I hereby certify that this correspondence is being transmitted via the Office electronic filing system in accordance with 37 C.F.R. § 1.6(a)(4):

Commissioner for Patents
P.O. Box 1450
Alexandria, VA 22313-1450

on February 6, 2013 .
Date

/Pia Murphy/
Signature

Pia Murphy
Typed or printed name of person signing Certificate

Registration Number, if applicable

(310) 772-8300
Telephone Number

Note: Each paper must have its own certificate of mailing or this certificate must identify each submitted paper.

Application Transmittal (1 page)
Application Data Sheet (5 pages)
Specification (20 pages)
Drawings (3 sheets)
Information Disclosure Statement (2 pages)
PTO/SB/08A/B (1 page)

DOCSLA-107128v1

SPECIFICATION

SOFT-PROJECTILE LAUNCHING DEVICE

CROSS-REFERENCE TO RELATED APPLICATION

[0001] This application is a divisional and claims the benefit of U.S. Patent Application No. 12/777,134, filed May 10, 2010, which is hereby incorporated by reference.

FIELD

[0002] The present patent document relates to soft-projectile launching devices, such as projectile toys. More particularly, the present patent document relates to soft-projectile launching devices that launch super absorbent polymer projectiles and related devices and methods.

BACKGROUND

[0003] Children have a variety of different types of projectile launching toys available to them. For example, HASBRO® makes an entire line of NERF® weaponry that fire NERF® projectiles. NERF® is a trademarked term well known in the toy industry and is associated with soft foam-like material. Other than weaponry, NERF® is also commonly associated with sports balls such as footballs, basketballs, and others. Over the years, a large number of NERF® foam-based weaponry products have been developed, including various blasters that launch various types of NERF® projectiles including darts, rockets, and balls.

[0004] NERF® foam is a spongy cellular material produced by the reaction of polyester with a diisocyanate. The polyester resin reacts with the diisocyanate while CO_2 is simultaneously

DOCSLA-98418v1
Petitioner Gel Blaster, Inc. - Ex. 1002, 0014

released by another reaction. The CO_2 gas creates open pockets within the polyurethane that give the NERF® foam its soft and light properties.

[0005] One reason the NERF® foam and other foam based projectile toys have became so popular has been due to the soft and light properties of the foam material. For example, NERF® balls were originally marketed as the "world's first official indoor ball." These same soft and light properties also make NERF® and other foams a great material for projectiles. Projectiles made from NERF® and other similar foams can be formed into balls and darts and fired from toy weaponry with little risk of injury. To this end, HASBRO® and other toy manufacturers have created numerous toy weaponry lines that shoot foam based projectiles including the N-Strike® line of toys.

[0006] Although NERF® and other foam like materials can be used to make toy weaponry projectiles that are relatively safe to project or launch, the properties of NERF® and other foam like materials have some significant drawbacks when used as projectiles for projectile launching toys. Because foam based materials such as NERF® foam are light, they are highly susceptible to air forces when trying to project them through the air in free flight as occurs when fired from toy weaponry. The soft, light properties of foam and NERF® type products are due to their low density. The low density of foam based projectiles decreases the momentum of the projectiles, which in turn increases the effect of air resistance, drag, and other motion retarding forces. This causes foam based projectiles to rapidly slow after initial firing and easily curve off line.

[0007] There are also small projectile systems for gaming and professional training purposes. These include paint ball guns and airsoft guns, but these systems are for adult use only due to the energy imparted to the projectile and the ability of the projectile to do serious harm.

DOCSLA-98418v1
Petitioner Gel Blaster, Inc. - Ex. 1002, 0015

SUMMARY OF THE INVENTION

[0008] One object of the present patent document is to provide an alternative soft-projectile launching system to those presently on the market. To this end, in one embodiment, a projectile launching device is provided that launches projectiles made from super absorbent polymers. The projectile launching device comprises: a holder designed for containing the soft-projectile made from a super absorbent polymer; and a firing mechanism operatively arranged to accelerate the holder from a firing position.

[0009] In another embodiment the holder of the soft-projectile launching system is slideably contained by the device. In another embodiment, the holder for a soft-projectile translates between the firing position and a launch point for the soft-projectile. In yet another embodiment the soft-projectile launching system further comprises a barrel having an interior in communication with the firing position wherein the holder for a soft-projectile translates down the barrel such that a soft-projectile launches from the barrel with little or no contact with the interior of the barrel.

[0010] In one embodiment, the soft-projectile launching system may have a firing mechanism incapable of storing energy independent of the user. Yet in other embodiments, the launching system may store energy. The soft-projectile launching systems of the present patent document may use air pressure, springs, rubber bands or any other suitable firing mechanism to launch the soft-projectile.

[0011] In another aspect of the present patent document, ammunition for a soft-projectile projection device is provided. The ammunition according to one embodiment comprises a plurality of projectiles made from a super absorbent polymer. The projectiles may be contained in a magazine. The projectiles may be hydrated or dehydrated.

Petitioner Gel Blaster, Inc. - Ex. 1002, 0016

[0012] In one embodiment, the projectiles have a diameter of less than 10 millimeters when hydrated. In yet another embodiment, the projectiles have a diameter of more than about 4mm and less than about 9mm when hydrated.

[0013] In another aspect of the present patent document, a magazine for a device for projecting soft-projectiles is provided. The magazine according to one embodiment comprises: a container having an interior volume having at least one opening wherein the container is configured to operatively mate with a device for projecting soft-projectiles and a plurality of projectiles made from a super absorbent polymer contained within the interior volume. The projectiles in the magazine may be hydrated or dehydrated and the magazine may include an inlet opening configured to only allow dehydrated projectiles to pass through into the magazine.

[0014] In one embodiment, the magazine further comprises a locking mechanism that prevents an outlet opening from opening unless the magazine is mated with a corresponding projection device.

[0015] In yet another aspect, a method of producing soft-projectiles is provided. The method comprises the steps of: placing a plurality of pieces of a super absorbent polymer in a liquid; allowing time for the plurality of pieces of a super absorbent polymer to absorb the liquid; and placing the plurality of pieces of a super absorbent polymer in a magazine.

[0016] In yet another aspect, a kit for making a plurality of soft-projectiles from a super absorbent polymer is provided. In one embodiment, the kit comprises: a predetermined quantity of dehydrated projectiles stored in a container, the dehydrated projectiles comprising a super absorbent polymer; instructions for adding the dehydrated projectiles into a interior chamber of a magazine and hydrating the dehydrated projectiles in the interior chamber of the magazine. The container may, for example, comprise a sealed pouch or other low cost, disposable container.

DOCSLA-98418v1
Petitioner Gel Blaster, Inc. - Ex. 1002, 0017

[0017] In another embodiment, an adaptation mechanism for a projectile toy comprises: a soft-projectile holder adapted to hold a soft-projectile made from a super absorbent polymer; and an attachment mechanism connected to the soft-projectile holder wherein the attachment mechanism is designed to mate to a firing mechanism of the projectile toy.

[0018] The super absorbent polymer projectile launching toys and/or weaponry described herein may increase the user experience as compared to foam-based projectile toys, yet they remain safe for children to use. Further aspects, objects, desirable features, and advantages of the devices and methods disclosed herein will be better understood from the detailed description and drawings that follow in which various embodiments are illustrated by way of example. It is to be expressly understood, however, that the drawings are for the purpose of illustration only and are not intended as a definition of the limits of the claimed invention.

BRIEF DESCRIPTION OF THE DRAWINGS

[0019] FIG. 1 illustrates a cross section of one embodiment of a projectile launching toy designed for use with a plurality of projectiles made from a super absorbent polymer.

[0020] FIG. 2 illustrates a cross section of one embodiment of a projectile launching toy designed for use with a projectile made from a super absorbent polymer.

[0021] FIG. 3 illustrates a cross section of a projectile magazine for use with a projectile launching toy such as that shown in Fig 1.

DETAILED DESCRIPTION OF THE PREFERRED EMBODIMENTS

[0022] The term "magazine" is used herein to refer to any container that holds super absorbent polymer projectiles for a projectile toy gun or other projectile weaponry. The magazine could be of any shape size or volume and have any number of openings as long as it

DOCSLA-98418v1
Petitioner Gel Blaster, Inc. - Ex. 1002, 0018

holds super absorbent polymer projectiles in a useable manner for a corresponding super absorbent polymer projectile launching device.

[0023] Super absorbent polymers (SAP's) were first invented by the United States Department of Agriculture (USDA) in the 1960's and are commonly used in personal disposable hygiene products such as diapers, protective underwear, and sanitary napkins. SAP's are polymers that can absorb an extremely large amount of liquid relative to their own mass. SAP's absorb aqueous solutions through hydrogen bonding with water molecules.

[0024] The present patent document discloses and teaches projectile launching devices, such as toys, amateur guns and weaponry that use projectiles formed from a super absorbent polymer (SAP). As a result, the projectiles launched by the devices of the present patent document are soft-projectiles. Further, once hydrated, the unique properties that SAP's exhibit give the soft-projectiles several advantages over current projectile materials such as paint balls, plastics, and foams. For example, hydrated SAP projectiles can maintain their shape under modest pressure. The ability of SAP projectiles to maintain their shape allows them to be projected with a reasonable force and velocity without breaking apart. However, under excessive pressure, hydrated SAP projectiles will break down and lose their shape. Because SAP projectiles break down under excessive pressure, the force at impact is spread over a much wider surface area, thus reducing the likelihood of injury.

[0025] SAP projectiles can also be designed to break down at different pressures based on their composition. This allows them to be tailored to have specific qualities as soft-projectiles. The total absorbency and swelling capacity of a SAP varies depending on the degree of cross-linking within the polymer. The lower the density of the cross-linking the higher the absorbent capacity of the SAP. Thus, low density cross-linked SAP's generally have a higher absorbent

Petitioner Gel Blaster, Inc. - Ex. 1002, 0019

capacity and swell to a larger degree than more highly cross-linked SAP's. Low density cross-linked SAP's also have a softer and more cohesive gel formation. High cross-link density polymers exhibit lower absorbent capacity and swell. The gel strength is firmer and can maintain particle shape even under higher pressures.

[0026] Consequently, by using a SAP with a higher cross-link density, a soft-projectile can be made to fly farther and faster without breaking apart and have a stronger impact. In contrast, soft-projectiles made from a SAP with a lower cross-link density will break apart more easily and have a much softer impact. Depending on the level of safety required, different SAP's with different cross-link densities may be used. For example, SAP's can be constructed that would be considered "highly compliant" by industry standards.

[0027] Soft-projectiles made from a SAP are preferably round but may be of other shapes as well, including, for example, dart shapes, cylinder shapes, bullet shapes, oval, square, rectangular or any other shape. Round is a preferable shape not only because it has fairly good ballistic characteristics but because SAP's are easily formed in round shapes.

[0028] Soft-projectiles made from a SAP can be any size. Preferably, however, the soft-projectiles made from a SAP are between about 3 millimeters (mm) and about 15mm in diameter when hydrated and more preferably between about 5mm and 8mm in diameter when hydrated. Typically, the soft-projectiles are about 1mm or less when the SAP forming the projectile is dehydrated.

[0029] Larger soft-projectiles made from a SAP are possible. For example, rounds having a diameter of 30mm have been created. However, there is approximately a 20% tolerance on the final diameter of the hydrated SAP soft-projectiles and therefore, the larger rounds are more difficult to make consistently uniform in diameter.

DOCSLA-98418v1
Petitioner Gel Blaster, Inc. - Ex. 1002, 0020

[0030] The SAP projectiles may be colorless to prevent any staining upon impact. Alternatively, soft-projectiles made from a SAP may also have additives added during the formulation of the SAP or during hydration that will create a temporary or indelible signature upon hitting a target. For example, soft-projectiles made from a SAP may be colored by adding a die to the SAP or the aqueous solution during the hydrating process. Depending on the die employed, the resulting signature may be of any desired color. Further, the employed die compound may be visible under normal lighting conditions or only under a ultra violet black light. Other additives may also be used including those that give the soft-projectiles a tracer effect such as glow-in-the-dark additives or other materials with luminescent properties.

[0031] Soft-projectiles made from water absorbing polymers, classified as hydrogels, will absorb aqueous solutions through hydrogen bonding with the water molecule. A SAP's ability to absorb water is a factor of the ionic concentration of an aqueous solution. Consequently, soft-projectiles made from a SAP are preferably grown in water with a PH of 7. More preferably soft-projectiles made from a SAP are grown in distilled water, where they may absorb 500 times their weight, and from 30-60 times their dehydrated volume.

[0032] FIG. 1 illustrates a cross section of one embodiment of a projection device 10, which in the present embodiment is a projectile launching toy, designed for use with soft-projectile 16. The soft-projectiles of the present patent document are formed from a super absorbent polymer. As shown in Fig. 1, projection device 10 is in the general form of a gun. However, in other embodiments, projection device 10 can have shapes and designs of other devices. For example, projection device 10 can be a bow, crossbow, sling shot, hand gun, machine gun, futuristic weapon, catapult, or shaped as any other type of weaponry. Projection device 10 can be made of

DOCSLA-98418v1
Petitioner Gel Blaster, Inc. - Ex. 1002, 0021

a number of suitable materials including metals, rubbers and plastics; however, injection molded plastic is a preferred construction material.

[0033] Projection device 10 has a firing position 30. The firing position 30 is where the soft-projectile 16 is positioned just prior to being fired or launched from the projection device 10. The firing mechanism of the embodiment shown in Fig. 1 is based on air pressure, which is created in air compression chamber 31. However, the firing mechanism of the projection device 10 may be based on any of the known ways of firing or launching projectiles or ammunition from a projection device. For example, springs or rubber bands can be stretched and released to launch the projectile from the projection device 10. These springs or rubber bands may further use a mechanical advantage to increase the velocity of the projectile as it is launched. As an example, compounds bows use a system of levers or pulleys to make the transfer of energy from the spring of the bow to the projectile more efficient. In addition to springs and rubber bands, air pressure can be used, as in the embodiment illustrated in Fig. 1. Air pressure can be created in a number of ways including, for example, from a plunger operated by the user, from a cartridge containing compressed gas (such as the CO_2 cartridges used with paint ball guns), from air that has been pumped into an internal chamber and then released, or from an explosion in a chamber.

[0034] In addition, various techniques of launching a projectile may also be combined. For example, the embodiment shown in Fig. 1 uses the combination of a spring and air pressure. The components of Fig. 1 will now be further described with respect to the use of projection device 10 to launch a soft-projectile made from a SAP 16.

[0035] To begin the process of firing a soft-projectile 16 made from a SAP with the device shown in Fig. 1, a user pulls back on the handle 11 which retracts the plunger 12 out of the aft end 17 of a plunger cylinder 19. The plunger 12 is attached to spring 18. As the spring 18 is

DOCSLA-98418v1
Petitioner Gel Blaster, Inc. - Ex. 1002, 0022

stretched, air is sucked into an air compression chamber 31 located between plunger seal 24 and air seal 22. Air seal 22 abuts against a stop (not shown) just behind the firing position 30 to prevent air seal 22 from following the plunger 12 past a certain point as it is drawn back. Consequently, the spring 18 is stretched. When the user releases the handle 12, the spring 18 quickly pulls the plunger 12 back inside the plunger cylinder 19. This creates a rapid increase in air pressure in the air compression chamber 31 between plunger seal 24 and air seal 22. Consequently, air seal 22 is propelled rapidly through barrel 15 towards the distal end of barrel 15 and simultaneously accelerates the holder for a soft-projectile 14 and the soft-projectile 16. The soft-projectile 16 is launched from the projection device 10 on a free trajectory and the air seal 22 and soft-projectile holder 14 are retained within the barrel 15 of projection device 10.

[0036] In the embodiment of the projection device 10 shown in Fig. 1, the air seal 22 and the soft-projectile holder 14 are retained via their connection to the spring 18. However, the soft-projectile holder 14 and air seal 22 may be retained by other means. For example, a stop (not shown) may be installed inside of barrel 15 to prevent air seal 22 or soft-projectile holder 14 from escaping but allow the soft-projectile 16 to pass freely. Preferably, the stop is located adjacent the barrel exit to maximize the distance over which the soft-projectile 16 is carried in the holder 14 before exiting the barrel.

[0037] Once the soft-projectile made from a SAP 16 has been launched, the plunger 12 and plunger seal 24 have been pulled inside the plunger cylinder 19 to the extent possible. In this position, the plunger seal 24 is located just behind the firing position 30. When the user wants to fire another round, the user pulls back on the handle 11. As the plunger 12 is retracted, air seal 22 and soft-projectile holder 14 are drawn behind the magazine or feed hopper 50. Once the air

DOCSLA-98418v1
Petitioner Gel Blaster, Inc. - Ex. 1002, 0023

seal 22 and the soft-projectile holder 14 are positioned behind the magazine or feed hopper 50, another soft-projectile made from a SAP 16 can fall into the firing position 30.

[0038] Toy guns and weaponry are typically classified into two different categories: 1) devices that can transfer stored energy into the projectile; and 2) devices that are incapable of storing energy independent of the user. The projection device 10 embodied in Fig. 1 is of the latter type. However, the device in Fig. 1 could be easily modified to store energy. For example, a one way valve could be added in combination with a trigger mechanism to prevent air seal 22 and soft-projectile holder 14 from advancing. The plunger 12 could be used to pump additional pressure into the air compression chamber 31 behind air seal 22. The user would then pull the trigger to release the pressure that has built up from multiple pumps of the plunger 12.

[0039] FIG. 2 illustrates a cross section of another embodiment of a projection device 10 designed for use with soft-projectiles 16 made from a super absorbent polymer. Projection device 10 of the present embodiment is a projectile launching toy. In the device 10 shown in Fig. 2, The smaller diameter tube 27 is wrapped back around to the back of the projection device 10 and laid on top of the projection device 10 so that tube portions 26 and 28 are continuously connected. In the embodiment in Fig. 2, the volume in front of plunger seal 24 transitions from plunger cylinder 19, which has a comparatively large diameter, to a tube 27, which has a smaller diameter than plunger cylinder 19. The change in the diameter of the air compression chamber 31 from the plunger cylinder 19, which comprises a tube of a relatively larger diameter, to a smaller diameter tube 27 will cause, during use of the device, a rapid increase in the velocity of the air flow in correlation with the conservation of energy and Bernoulli's principle. Consequently, the rapid air flow is forced down the length of the smaller tube 27 until it escapes out the front of the projection device 10. As the air rushes down the smaller diameter tube 27 the

DOCSLA-98418v1
Petitioner Gel Blaster, Inc. - Ex. 1002, 0024

soft-projectile holder 14, which fits with an air seal inside the smaller diameter tube 27, is rapidly accelerated with the air, carrying the soft-projectile 16 made from a SAP and launching it out of the projection device 10.

[0040] Unlike the embodiment of Fig. 1, the soft-projectile holder 14 is not retained by the spring. In the embodiment of Fig. 2, the soft-projectile holder 14 is slideably contained by the barrel 15, but is not otherwise attached. The soft-projectile holder 14 acts as a free sliding piston that may operate independently of the plunger 12. A stop near the end of the barrel 15 and a stop near tube position 28 retains the soft-projectile holder 14 within a desired operating region of the barrel 15. The stop near the end of the barrel 15 should be designed to retain the soft-projectile holder 14 without interfering with the launching of the soft-projectile 16 made from a SAP.

[0041] Fig. 2 illustrates a device 10 having a smaller tube 27 that wraps from a position relatively near the distal or front end 13 of plunger cylinder 19 back to a position relatively near the proximal or back end 17 of plunger cylinder 19 and then extends down the length of the plunger cylinder 19. This is not required and the smaller tube could simply extend straight away from distal end 13. However, by wrapping the tube as shown in Fig. 2, the more rigid structure of the plunger cylinder can be used to help stiffen the tube 27.

[0042] The soft-projectile holder 14 is preferably designed to minimize, or even prevent altogether, the contact of the soft-projectile 16 with the barrel 15 as the soft-projectile 16 travels down the barrel 15. Although soft-projectile holder 14 is not a requirement, minimizing the contact between the soft-projectile 16 and the barrel 15 is preferable. The soft-projectile 16 will tend to retain its shape, especially if the cross-link density is high. However, if the soft-projectile 16 is nicked, scratched, or damaged by the barrel as it accelerates, it may disintegrate prior to exiting the barrel 15, especially if the cross-link density is low. If the soft-projectile 16

DOCSLA-98418v1
Petitioner Gel Blaster, Inc. - Ex. 1002, 0025

disintegrates prior to exiting the barrel 15, the soft-projectile 16 will not fly accurately or the correct distance. Consequently, the design of the soft-projectile holder 14 should take care to encase enough of the soft-projectile 16 to prevent it from touching the sides of the barrel 15 as it travels. The soft-projectile holder 14 is preferably cup shaped in a form that mates with the exterior surface of the soft-projectiles 16 to be employed with the device. However, the soft-projectile holder 14 may be bucket shaped, crescent shape, or any other shape that helps prevent or suitably minimize the contact between the soft-projectile 16 and the barrel 15.

[0043] In addition to preventing contact between the soft-projectile 16 and the barrel 15 during launch, the soft-projectile holder 14 also helps transfer the energy of the firing mechanism into the motion of the soft-projectile 16. In addition, if shaped similar to soft-projectile 16, the soft-projectile holder 14 helps distribute the force generated by the firing mechanism evenly over the soft-projectile 16 and therefore, helps prevent the soft-projectile 16 from breaking during launch. Consequently, a holder 14 that mates more appropriately with the shape of the outside surface of the soft-projectile 16 is preferable. Furthermore, the soft-projectile holder 14 may help center the soft-projectile 16 and keep the soft-projectile 16 centered as it travels down the barrel 15. To this end, a soft-projectile holder 14 in the shape of a hemisphere may be used with round soft-projectiles 16. The hemispherically shaped holder 14 may have a diameter slightly larger than the soft-projectile 16 to not only help prevent contact with the interior of the barrel 15, but also to accommodate variations the diameters of soft-projectiles 16.

[0044] Although the embodiments of Fig.'s 1 and 2 illustrate a device 10 using a spring and air pressure, and preferably a combination of a spring and air pressure is used, projection device 10 can use a catapult system, sling shot, bow style or any other type of acceleration system to launch the soft-projectile 16. As another example, projection device 10 can accelerate the soft-

DOCSLA-98418v1
Petitioner Gel Blaster, Inc. - Ex. 1002, 0026

projectile or soft-projectile holder by an accelerating mass, like the hammer of a gun, impacting the soft-projectile or soft-projectile holder. Furthermore, these devices can all be set up to work with stored energy or work with only energy provided by a user without departing from the embodiments of the present patent document.

[0045] FIG. 3 illustrates a cross section of a magazine 50 for use with a projectile device 10, such as the projectile launching toy shown in Fig. 1. Magazine 50 can be of any shape or size and is intended to contain the soft-projectiles 16 made from a SAP. Magazine 50 can be made of metal, glass, plastic, rubber, or any other suitable material. Preferably magazine 50 is constructed of injected molded plastic. Magazine 50 may be reusable and refillable or designed for a single use and disposable. Magazine 50 can be loaded with already hydrated soft-projectiles 16 made from a SAP. Alternatively, magazine 50 can be loaded with dehydrated soft-projectiles 16 made from a SAP. If dehydrated soft-projectiles are used, water or another aqueous solution is added to the magazine 50 to hydrate the soft-projectiles 16 made from a SAP. Magazine 50 is preferably sealable to prevent water or moisture from the soft-projectiles 16 from leaking out.

[0046] Magazine 50 has a first opening 52 designed to mate with a projection device 10. Preferably the first opening 52 of magazine 50 includes a locking mechanism, such as a trap door, that prevents the first opening from opening when the magazine 50 is not mated to a corresponding projection device 10. The locking mechanism provides a safety mechanism that prevents foreign objects from being loaded into the magazine 50 and launched by the projection device 10. The locking mechanism can be a keying system, child safety device, or other locking mechanism that prevents foreign objects from being loaded into the magazine.

DOCSLA-98418v1
Petitioner Gel Blaster, Inc. - Ex. 1002, 0027

[0047] The opening on the projection device 10 that mates with the magazine preferably has a corresponding locking mechanism to complement the locking mechanism on the magazine 50. Consequently, soft-projectiles 16 may only be loaded into the projection device 10 from the magazine 50. Similar to the locking mechanism that prevents foreign objects being loaded into the magazine 50, the corresponding locking mechanism on the opening in the projection device prevents foreign objects from being loaded directly into the projection device 10 and then launched.

[0048] As shown in Fig. 3, the magazine 50 may have a second opening 54 for refilling the magazine with soft-projectiles 16 made from a SAP into the magazine. The second opening 54 may be large enough to allow hydrated soft-projectiles 16 to be loaded directly into the magazine. In such a case, the interface between the magazine 50 and the projection device 10 should be designed to prevent foreign objects from being loaded from the magazine 50 into the projection device 10 and subsequently launched.

[0049] Alternatively, the second opening 54 may further include a screen 56 designed to prevent passage of objects larger than a particular size. The dehydrated SAP pieces forming the soft-projectiles 16 may typically have a diameter of about 1 millimeter (mm) or less. In such embodiments, the screen 56 can be designed to only allow objects of approximately 1mm or less in diameter to pass through. The dehydrated soft-projectiles 16 can then be loaded into the magazine 50 and water or another aqueous solution can be added and the soft-projectiles 16 can swell to their appropriate size. The screen 56 is a safety mechanism to make sure foreign objects are not loaded into the magazine 50 and then subsequently launched from the projection device 10. Although it is recognized that foreign objects of less than 1mm can be loaded into the

Petitioner Gel Blaster, Inc. - Ex. 1002, 0028

magazine, objects of less than 1mm are much less likely to cause significant damage if subsequently launched by the projection device 10 because of their reduced size and weight.

[0050] The dehydrated soft-projectiles 16 may be sold in a kit designed to refill a magazine 50. In one embodiment, the kit comprises a pre-counted number of dehydrated rounds designed to fill up a particular magazine when hydrated. A magazine 50 preferably holds between 150 and 250 rounds and more preferably holds about 200 soft-projectiles 16. However, the magazine 50 and the kit that fills the magazine 50, can hold any number of soft-projectiles. For example, larger clips of approximately 500 to 1000 rounds may be used for machine guns, Gatling guns, or other rapid fire projection devices 10. In contrast, magazines or clips of 6 to 20 rounds may be used for single shot toys and weaponry.

[0051] The kit preferably further includes instructions on how to insert the dehydrated rounds into the magazine 50 and grow the dehydrated rounds inside the magazine 50. After purchasing a kit, a user would dump the dehydrated rounds into the magazine and follow the directions to add distilled water or another appropriate aqueous solution to hydrate the rounds and swell them into their appropriate size for launching from a projectile device 10.

[0052] In addition to projection devices designed specifically to launch soft-projectiles 16, embodiments of the present patent document include adaption devices to adapt existing projectile toys and weaponry to launch soft-projectiles 16. Adaption devices attach to the firing mechanism of the existing toy or weaponry and allow the transfer of energy from the firing mechanism into kinetic motion of the SAP projectile 16 without damaging the SAP projectile 16. Preferably, soft-projectile holders 14, similar to those of Fig. 1 and 2, are retrofit to the existing toys and/or weaponry to protect the soft-projectile made from a SAP 16. However, such holders

DOCSLA-98418v1
Petitioner Gel Blaster, Inc. - Ex. 1002, 0029

are not required, and other methods may be used without departing from the scope of the embodiments of the present patent document.

[0053] Although the inventions have been described with reference to preferred embodiments and specific examples, it will readily be appreciated by those skilled in the art that many modifications and adaptations of the methods and devices described herein are possible without departure from the spirit and scope of the inventions as claimed hereinafter. Thus, it is to be clearly understood that this description is made only by way of example and not as a limitation on the scope of the inventions as claimed below.

Petitioner Gel Blaster, Inc. - Ex. 1002, 0030

CLAIMS

What is claimed is:

1. A projectile launching system, comprising:

ammunition comprising a plurality of soft-projectiles formed from hydrated super absorbent polymer; and

a projectile launcher for launching the ammunition in free flight.

2. The system of claim 1, further comprising a sealed container for storage of the ammunition.

3. The system of claim 1, wherein the projectile launcher is a toy.

4. The system of claim 1, wherein the projectile launcher is in the shape of a gun.

5. The system of claim 1, wherein the projectile launcher includes a feed chamber for loading the soft-projectiles within projectile launcher.

6. The system of claim 5, wherein the feed chamber is provided within a magazine.

7. The system of claim 5, wherein the projectile launcher is adapted to load the soft-projectiles from the feed chamber to a firing position of the projectile launcher.

8. The system of claim 1, wherein the soft-projectiles are substantially spherical.

9. The system of claim 1, wherein the super absorbent polymer has a cross linking density sufficient to prevent the soft-projectiles from breaking apart when launched from the projectile launcher.

10. The system of claim 1, wherein the projectile launcher is designed to use air pressure to launch the soft-projectiles.

11. The system of claim 1, wherein the projectile launcher comprises a firing mechanism that stores energy independent of a user.

Petitioner Gel Blaster, Inc. - Ex. 1002, 0031

12. The system of claim 1, wherein the projectile launcher comprises a firing mechanism that is incapable of storing energy independent of a user.

13. The system of claim 1, wherein the projectile launcher comprises a firing mechanism that directly applies a force to the ammunition.

14. The system of claim 1, wherein the projectile launcher comprises a firing mechanism that indirectly applies a force to the ammunition.

15. The system of claim 7, wherein the projectile launcher further comprises:

an air compression chamber;

a piston disposed within and axially aligned with the air compression chamber; and

a spring operatively arranged to bias the piston toward a rest position from a cocked position within the air compression chamber.

16. The projectile system of claim 15, wherein the projectile launcher further comprises a smaller diameter tube in communication with the air compression chamber, and wherein a biasing force of the spring is sufficient to cause the piston to move from the cocked position to the rest position to force air from the air compression chamber into the smaller diameter tube and cause a soft-projectile located at the firing position to accelerate and be launched from the projectile launcher.

Petitioner Gel Blaster, Inc. - Ex. 1002, 0032

ABSTRACT

A device for projecting a soft-projectile made from a super absorbent polymer, the device comprising a holder designed for containing the soft-projectile made from a super absorbent polymer; and a firing mechanism operatively arranged to accelerate the holder from a firing position.

DOCSLA-98418v1
Petitioner Gel Blaster, Inc. - Ex. 1002, 0033

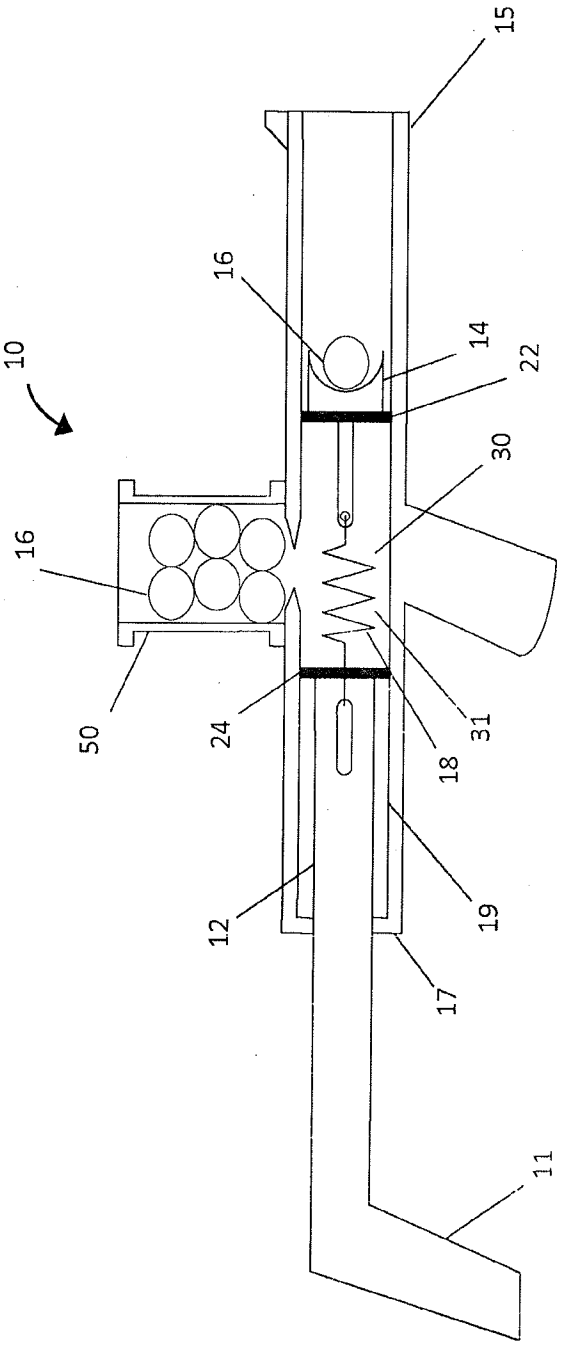

FIG. 1

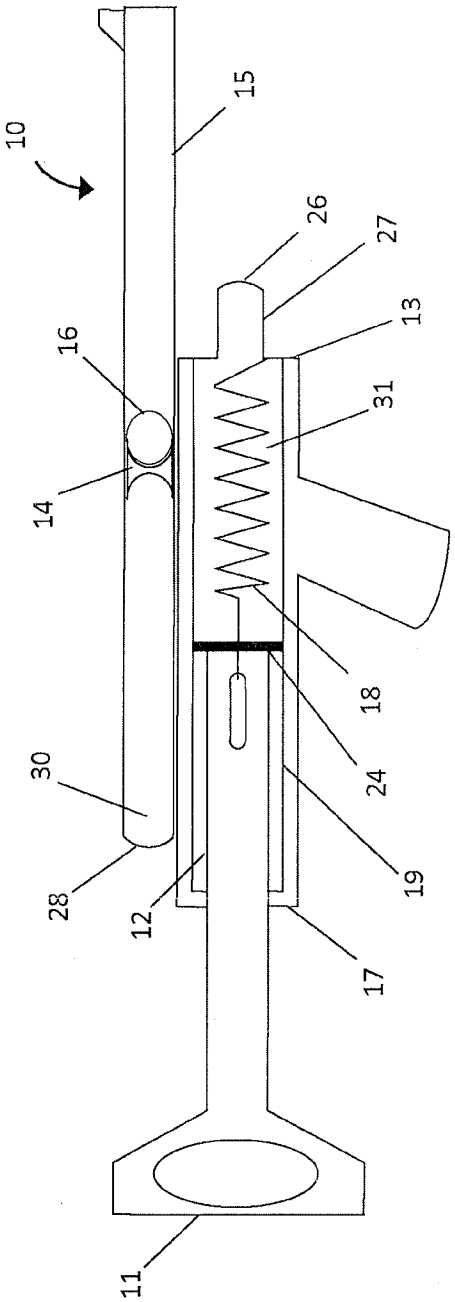

FIG. 2

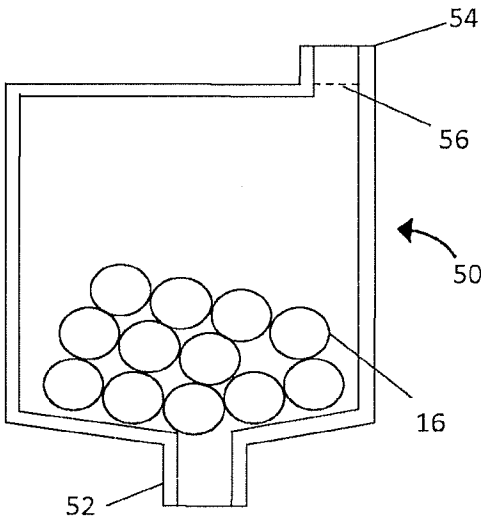

FIG. 3

I hereby certify that this paper (along with any paper referred to as being attached or enclosed) is being transmitted via the Office electronic filing system in accordance with 37 CFR § 1.6(a)(4).

Dated: February 6, 2013
Electronic Signature for Pia Murphy: /Pia Murphy/

Docket No.: H6845.1001-US-B
(PATENT)

IN THE UNITED STATES PATENT AND TRADEMARK OFFICE

In re Patent Application of:
Keith G. Meggs

Application No.: Not Yet Assigned

Group Art Unit: N/A

Filed: Concurrently Herewith

Examiner: Not Yet Assigned

For: SOFT-PROJECTILE LAUNCHING DEVICE

INFORMATION DISCLOSURE STATEMENT (IDS)

Commissioner for Patents
P.O. Box 1450
Alexandria, VA 22313-1450

Dear Madam:

Pursuant to 37 CFR 1.56, 1.97 and 1.98, the attention of the Patent and Trademark Office is hereby directed to the references listed on the attached PTO/SB/08. It is respectfully requested that the information be expressly considered during the prosecution of this application, and that the references be made of record therein and appear among the "References Cited" on any patent to issue therefrom.

This Information Disclosure Statement is filed concurrently herewith new application. In accordance with 37 C.F.R. 1.98(d), copies of the cited documents are not enclosed as they were provided in US Application No. 12/777,134, filed May 10, 2010 which the present application relies upon for an earlier effective filing date under 35 U.S.C. 120.

In accordance with 37 CFR 1.97(g), the filing of this Information Disclosure Statement shall not be construed to mean that a search has been made or that no other material information as defined in 37 CFR 1.56(a) exists. In accordance with 37 CFR 1.97(h), the filing of this Information

Disclosure Statement shall not be construed to be an admission that any patent, publication or other information referred to therein is "prior art" for this invention unless specifically designated as such.

It is submitted that the Information Disclosure Statement is in compliance with 37 CFR 1.98 and the Examiner is respectfully requested to consider the listed references.

The Director is hereby authorized to charge any deficiency in the fees filed, asserted to be filed or which should have been filed herewith (or with any paper hereafter filed in this application by this firm) to our Deposit Account No. 04-1073, under Order No. H6845.1001-US-B.

Dated: February 6, 2013

Respectfully submitted,

Electronic signature: /David A. Randall/
David A. Randall
Registration No.: 37,217
DICKSTEIN SHAPIRO LLP
2049 Century Park East Suite 700
Los Angeles, California 90067-3109
(310) 772-8300
Attorney for Applicants

Disclosure Statement shall not be construed to be an admission that any patent, publication or other information referred to therein is "prior art" for this invention unless specifically designated as such.

It is submitted that the Information Disclosure Statement is in compliance with 37 CFR 1.98 and the Examiner is respectfully requested to consider the listed references.

The Director is hereby authorized to charge any deficiency in the fees filed, asserted to be filed or which should have been filed herewith (or with any paper hereafter filed in this application by this firm) to our Deposit Account No. 04-1073, under Order No. H6845.1001-US-B.

Dated: February 6, 2013

Respectfully submitted,

Electronic signature: /David A. Randall/
David A. Randall
Registration No.: 37,217
DICKSTEIN SHAPIRO LLP
2049 Century Park East Suite 700
Los Angeles, California 90067-3109
(310) 772-8300
Attorney for Applicants

03/01/2013 MNGUYEN 00000013 041073 13761082
01 FC:2051 65.00 DA

PATENT APPLICATION FEE DETERMINATION RECORD

Substitute for Form PTO-875

Application or Docket Number
13/761,082

APPLICATION AS FILED - PART I

FOR	(Column 1) NUMBER FILED	(Column 2) NUMBER EXTRA	SMALL ENTITY RATE($)	SMALL ENTITY FEE($)	OR	OTHER THAN SMALL ENTITY RATE($)	OTHER THAN SMALL ENTITY FEE($)
BASIC FEE (37 CFR 1.16(a), (b), or (c))	N/A	N/A	N/A	70		N/A	
SEARCH FEE (37 CFR 1.16(k), (i), or (m))	N/A	N/A	N/A	300		N/A	
EXAMINATION FEE (37 CFR 1.16(o), (p), or (q))	N/A	N/A	N/A	360		N/A	
TOTAL CLAIMS (37 CFR 1.16(i))	16 minus 20 =	*	x 40 =	0.00	OR		
INDEPENDENT CLAIMS (37 CFR 1.16(h))	1 minus 3 =	*	x 210 =	0.00			
APPLICATION SIZE FEE (37 CFR 1.16(s))	If the specification and drawings exceed 100 sheets of paper, the application size fee due is $310 ($155 for small entity) for each additional 50 sheets or fraction thereof. See 35 U.S.C. 41(a)(1)(G) and 37 CFR 1.16(s).			0.00			
MULTIPLE DEPENDENT CLAIM PRESENT (37 CFR 1.16(j))				0.00			
* If the difference in column 1 is less than zero, enter "0" in column 2.			TOTAL	730		TOTAL	

APPLICATION AS AMENDED - PART II

		(Column 1) CLAIMS REMAINING AFTER AMENDMENT		(Column 2) HIGHEST NUMBER PREVIOUSLY PAID FOR	(Column 3) PRESENT EXTRA	SMALL ENTITY RATE($)	SMALL ENTITY ADDITIONAL FEE($)	OR	OTHER THAN SMALL ENTITY RATE($)	OTHER THAN SMALL ENTITY ADDITIONAL FEE($)
AMENDMENT A	Total (37 CFR 1.16(i))	*	Minus	**	=	x =		OR	x =	
AMENDMENT A	Independent (37 CFR 1.16(h))	*	Minus	***	=	x =		OR	x =	
AMENDMENT A	Application Size Fee (37 CFR 1.16(s))									
AMENDMENT A	FIRST PRESENTATION OF MULTIPLE DEPENDENT CLAIM (37 CFR 1.16(j))							OR		
						TOTAL ADD'L FEE		OR	TOTAL ADD'L FEE	

		(Column 1) CLAIMS REMAINING AFTER AMENDMENT		(Column 2) HIGHEST NUMBER PREVIOUSLY PAID FOR	(Column 3) PRESENT EXTRA	RATE($)	ADDITIONAL FEE($)		RATE($)	ADDITIONAL FEE($)
AMENDMENT B	Total (37 CFR 1.16(i))	*	Minus	**	=	x =		OR	x =	
AMENDMENT B	Independent (37 CFR 1.16(h))	*	Minus	***	=	x =		OR	x =	
AMENDMENT B	Application Size Fee (37 CFR 1.16(s))									
AMENDMENT B	FIRST PRESENTATION OF MULTIPLE DEPENDENT CLAIM (37 CFR 1.16(j))							OR		
						TOTAL ADD'L FEE		OR	TOTAL ADD'L FEE	

* If the entry in column 1 is less than the entry in column 2, write "0" in column 3.
** If the "Highest Number Previously Paid For" IN THIS SPACE is less than 20, enter "20".
*** If the "Highest Number Previously Paid For" IN THIS SPACE is less than 3, enter "3".
The "Highest Number Previously Paid For" (Total or Independent) is the highest found in the appropriate box in column 1.

UNITED STATES PATENT AND TRADEMARK OFFICE

UNITED STATES DEPARTMENT OF COMMERCE
United States Patent and Trademark Office
Address: COMMISSIONER FOR PATENTS
P.O. Box 1450
Alexandria, Virginia 22313-1450
www.uspto.gov

APPLICATION NUMBER	FILING or 371(c) DATE	GRP ART UNIT	FIL FEE REC'D	ATTY.DOCKET.NO	TOT CLAIMS	IND CLAIMS
13/761,082	02/06/2013	3641	598	H6845.1001-B	16	1

CONFIRMATION NO. 8512

91477
Dickstein Shapiro LLP
1633 Broadway
New York, NY 10019

FILING RECEIPT

OC000000061933803

Date Mailed: 06/18/2013

Receipt is acknowledged of this non-provisional patent application. The application will be taken up for examination in due course. Applicant will be notified as to the results of the examination. Any correspondence concerning the application must include the following identification information: the U.S. APPLICATION NUMBER, FILING DATE, NAME OF APPLICANT, and TITLE OF INVENTION. Fees transmitted by check or draft are subject to collection. Please verify the accuracy of the data presented on this receipt. **If an error is noted on this Filing Receipt, please submit a written request for a Filing Receipt Correction. Please provide a copy of this Filing Receipt with the changes noted thereon. If you received a "Notice to File Missing Parts" for this application, please submit any corrections to this Filing Receipt with your reply to the Notice. When the USPTO processes the reply to the Notice, the USPTO will generate another Filing Receipt incorporating the requested corrections**

Inventor(s)

KEITH G. MEGGS, Rancho Palos Verdes, CA;
Ronald Brawer, Manhattan Beach, CA;
Michael G. Hoeting, Cincinnati, OH;
Neil Hamilton, Covington, KY;

Applicant(s)

The Maya Group, Inc., Torrance, CA

Power of Attorney: None

Domestic Priority data as claimed by applicant

This application is a DIV of 12/777,134 05/10/2010 PAT 8371282

Foreign Applications for which priority is claimed (You may be eligible to benefit from the **Patent Prosecution Highway** program at the USPTO. Please see http://www.uspto.gov for more information.) - None.
Foreign application information must be provided in an Application Data Sheet in order to constitute a claim to foreign priority. See 37 CFR 1.55 and 1.76.

If Required, Foreign Filing License Granted: 06/13/2013

The country code and number of your priority application, to be used for filing abroad under the Paris Convention, is **US 13/761,082**

Projected Publication Date: 09/26/2013

Non-Publication Request: No

Early Publication Request: No
**** SMALL ENTITY ****

Title

SOFT-PROJECTILE LAUNCHING DEVICE

Preliminary Class

124

Statement under 37 CFR 1.55 or 1.78 for AIA (First Inventor to File) Transition Applications:

PROTECTING YOUR INVENTION OUTSIDE THE UNITED STATES

Since the rights granted by a U.S. patent extend only throughout the territory of the United States and have no effect in a foreign country, an inventor who wishes patent protection in another country must apply for a patent in a specific country or in regional patent offices. Applicants may wish to consider the filing of an international application under the Patent Cooperation Treaty (PCT). An international (PCT) application generally has the same effect as a regular national patent application in each PCT-member country. The PCT process **simplifies** the filing of patent applications on the same invention in member countries, but **does not result** in a grant of "an international patent" and does not eliminate the need of applicants to file additional documents and fees in countries where patent protection is desired.

Almost every country has its own patent law, and a person desiring a patent in a particular country must make an application for patent in that country in accordance with its particular laws. Since the laws of many countries differ in various respects from the patent law of the United States, applicants are advised to seek guidance from specific foreign countries to ensure that patent rights are not lost prematurely.

Applicants also are advised that in the case of inventions made in the United States, the Director of the USPTO must issue a license before applicants can apply for a patent in a foreign country. The filing of a U.S. patent application serves as a request for a foreign filing license. The application's filing receipt contains further information and guidance as to the status of applicant's license for foreign filing.

Applicants may wish to consult the USPTO booklet, "General Information Concerning Patents" (specifically, the section entitled "Treaties and Foreign Patents") for more information on timeframes and deadlines for filing foreign patent applications. The guide is available either by contacting the USPTO Contact Center at 800-786-9199, or it can be viewed on the USPTO website at http://www.uspto.gov/web/offices/pac/doc/general/index.html.

For information on preventing theft of your intellectual property (patents, trademarks and copyrights), you may wish to consult the U.S. Government website, http://www.stopfakes.gov. Part of a Department of Commerce initiative, this website includes self-help "toolkits" giving innovators guidance on how to protect intellectual property in specific countries such as China, Korea and Mexico. For questions regarding patent enforcement issues, applicants may call the U.S. Government hotline at 1-866-999-HALT (1-866-999-4258).

Petitioner Gel Blaster, Inc. - Ex. 1002, 0042

LICENSE FOR FOREIGN FILING UNDER

Title 35, United States Code, Section 184

Title 37, Code of Federal Regulations, 5.11 & 5.15

GRANTED

The applicant has been granted a license under 35 U.S.C. 184, if the phrase "IF REQUIRED, FOREIGN FILING LICENSE GRANTED" followed by a date appears on this form. Such licenses are issued in all applications where the conditions for issuance of a license have been met, regardless of whether or not a license may be required as set forth in 37 CFR 5.15. The scope and limitations of this license are set forth in 37 CFR 5.15(a) unless an earlier license has been issued under 37 CFR 5.15(b). The license is subject to revocation upon written notification. The date indicated is the effective date of the license, unless an earlier license of similar scope has been granted under 37 CFR 5.13 or 5.14.

This license is to be retained by the licensee and may be used at any time on or after the effective date thereof unless it is revoked. This license is automatically transferred to any related applications(s) filed under 37 CFR 1.53(d). This license is not retroactive.

The grant of a license does not in any way lessen the responsibility of a licensee for the security of the subject matter as imposed by any Government contract or the provisions of existing laws relating to espionage and the national security or the export of technical data. Licensees should apprise themselves of current regulations especially with respect to certain countries, of other agencies, particularly the Office of Defense Trade Controls, Department of State (with respect to Arms, Munitions and Implements of War (22 CFR 121-128)); the Bureau of Industry and Security, Department of Commerce (15 CFR parts 730-774); the Office of Foreign AssetsControl, Department of Treasury (31 CFR Parts 500+) and the Department of Energy.

NOT GRANTED

No license under 35 U.S.C. 184 has been granted at this time, if the phrase "IF REQUIRED, FOREIGN FILING LICENSE GRANTED" DOES NOT appear on this form. Applicant may still petition for a license under 37 CFR 5.12, if a license is desired before the expiration of 6 months from the filing date of the application. If 6 months has lapsed from the filing date of this application and the licensee has not received any indication of a secrecy order under 35 U.S.C. 181, the licensee may foreign file the application pursuant to 37 CFR 5.15(b).

SelectUSA

The United States represents the largest, most dynamic marketplace in the world and is an unparalleled location for business investment, innovation, and commercialization of new technologies. The U.S. offers tremendous resources and advantages for those who invest and manufacture goods here. Through SelectUSA, our nation works to promote and facilitate business investment. SelectUSA provides information assistance to the international investor community; serves as an ombudsman for existing and potential investors; advocates on behalf of U.S. cities, states, and regions competing for global investment; and counsels U.S. economic development organizations on investment attraction best practices. To learn more about why the United States is the best country in the world to develop technology, manufacture products, deliver services, and grow your business, visit http://www.SelectUSA.gov or call +1-202-482-6800.

UNITED STATES PATENT AND TRADEMARK OFFICE

UNITED STATES DEPARTMENT OF COMMERCE
United States Patent and Trademark Office
Address: COMMISSIONER FOR PATENTS
P.O. Box 1450
Alexandria, Virginia 22313-1450
www.uspto.gov

APPLICATION NUMBER	FILING OR 371(C) DATE	FIRST NAMED APPLICANT	ATTY. DOCKET NO./TITLE
13/761,082	02/06/2013	KEITH G. MEGGS	H6845.1001-B

CONFIRMATION NO. 8512

91477
Dickstein Shapiro LLP
1633 Broadway
New York, NY 10019

NOTICE

OC000000061933804

Date Mailed: 06/18/2013

INFORMATIONAL NOTICE TO APPLICANT

Applicant is notified that the above-identified application contains the deficiencies noted below. No period for reply is set forth in this notice for correction of these deficiencies. However, if a deficiency relates to the inventor's oath or declaration, the applicant must file an oath or declaration in compliance with 37 CFR 1.63, or a substitute statement in compliance with 37 CFR 1.64, executed by or with respect to each actual inventor no later than the expiration of the time period set in the "Notice of Allowability" to avoid abandonment. See 37 CFR 1.53(f).

The item(s) indicated below are also required and should be submitted with any reply to this notice to avoid further processing delays.

- A properly executed inventor's oath or declaration has not been received for the following inventor(s):
  KEITH G. MEGGS
  Ronald Brawer
  Michael G. Hoeting
  Neil Hamilton

  Applicant may submit the inventor's oath or declaration at any time before the Notice of Allowance and Fee(s) Due, PTOL-85, is mailed.

Petitioner Gel Blaster, Inc. - Ex. 1002, 0044

POWER OF ATTORNEY TO PROSECUTE APPLICATIONS BEFORE THE USPTO

As the Applicant and/or Assignee I hereby appoint:

[x] Practitioners associated with the Customer Number: 91477

OR

[ ] Practitioner(s) named below (if more than ten patent practitioners are to be named, then a customer number must be used):

Name	Registration Number	Name	Registration Number

as attorney(s) or agent(s) to represent the Applicant and/or Assignee before the United States Patent and Trademark Office (USPTO) in connection with any and all patent applications assigned to the Applicant and/or Assignee, under an obligation to be assigned to the Applicant and/or Assignee, or for which the Applicant and/or Assignee has a sufficient proprietary interest.

Assignee and/or Applicant Name and Address:

The Maya Group, Inc.
19823 Hamilton Ave
Torrance, CA 90502

The practitioners appointed in this form are authorized to act on behalf of the assignee and/or applicant to transact all business in the United States Patent and Trademark Office.

SIGNATURE of Assignee and/or Applicant

The individual whose signature and title is supplied below is authorized to act on behalf of the assignee and/or applicant

Signature		Date	September 20, 2013
Name	~~Ronald Brewer~~ Oded Ben-Zur	Telephone	(424) 266-6263
Title and Company	President, The Maya Group, Inc.		

Electronic Acknowledgement Receipt

EFS ID:	16919366
Application Number:	13761082
International Application Number:	
Confirmation Number:	8512
Title of Invention:	SOFT-PROJECTILE LAUNCHING DEVICE
First Named Inventor/Applicant Name:	KEITH G. MEGGS
Customer Number:	91477
Filer:	Paul Graham Novak/Pia Murphy
Filer Authorized By:	Paul Graham Novak
Attorney Docket Number:	H6845.1001-B
Receipt Date:	20-SEP-2013
Filing Date:	06-FEB-2013
Time Stamp:	19:29:34
Application Type:	Utility under 35 USC 111(a)

Payment information:

Submitted with Payment	no

File Listing:

Document Number	Document Description	File Name	File Size(Bytes)/ Message Digest	Multi Part /.zip	Pages (if appl.)
1	Power of Attorney	H6845_1001-US-B_-_POA_Transmittal.pdf	77123 51476500b0274954c999e7f55fca47b2ff54f0d4	no	1

Warnings:

Information:

2	Power of Attorney	H6845_1001_General_POA.pdf	575448 7302f342589fd48c2947d030a9089848c8e23d52	no	1

Warnings:

Information:

Total Files Size (in bytes):	652571

This Acknowledgement Receipt evidences receipt on the noted date by the USPTO of the indicated documents, characterized by the applicant, and including page counts, where applicable. It serves as evidence of receipt similar to a Post Card, as described in MPEP 503.

New Applications Under 35 U.S.C. 111
If a new application is being filed and the application includes the necessary components for a filing date (see 37 CFR 1.53(b)-(d) and MPEP 506), a Filing Receipt (37 CFR 1.54) will be issued in due course and the date shown on this Acknowledgement Receipt will establish the filing date of the application.

National Stage of an International Application under 35 U.S.C. 371
If a timely submission to enter the national stage of an international application is compliant with the conditions of 35 U.S.C. 371 and other applicable requirements a Form PCT/DO/EO/903 indicating acceptance of the application as a national stage submission under 35 U.S.C. 371 will be issued in addition to the Filing Receipt, in due course.

New International Application Filed with the USPTO as a Receiving Office
If a new international application is being filed and the international application includes the necessary components for an international filing date (see PCT Article 11 and MPEP 1810), a Notification of the International Application Number and of the International Filing Date (Form PCT/RO/105) will be issued in due course, subject to prescriptions concerning national security, and the date shown on this Acknowledgement Receipt will establish the international filing date of the application.

PTO/AIA/82A (07-12)
Approved for use through 11/30/2014. OMB 0651-0035
U.S. Patent and Trademark Office; U.S. DEPARTMENT OF COMMERCE
Under the Paperwork Reduction Act of 1995, no persons are required to respond to a collection of information unless it displays a valid OMB control number.

TRANSMITTAL FOR POWER OF ATTORNEY TO ONE OR MORE REGISTERED PRACTITIONERS

NOTE: This form is to be submitted with the Power of Attorney by Applicant form (PTO/AIA/82B or equivalent) to identify the application to which the Power of Attorney is directed, in accordance with 37 CFR 1.5. If the Power of Attorney by Applicant form is not accompanied by this transmittal form or an equivalent, the Power of Attorney will not be recognized in the application.

Application Number	13/761,082
Filing Date	February 6, 2013
First Named Inventor	Keith G. Meggs
Title	SOFT-PROJECTILE LAUNCHING DEVICE
Art Unit	3641
Examiner Name	M. D. David
Attorney Docket Number	H6845.1001-US-B

SIGNATURE of Applicant or Patent Practitioner

Signature	/Paul G. Novak/	Date	September 20, 2013
Name	Paul G. Novak	Telephone	(310) 772-8353
Registration Number	55,504		

NOTE: This form must be signed in accordance with 37 CFR 1.33. See 37 CFR 1.4(d) for signature requirements and certifications.

☐ *Total of 1 forms are submitted.

This collection of information is required by 37 CFR 1.31, 1.32 and 1.33. The information is required to obtain or retain a benefit by the public which is to file (and by the USPTO to process) an application. Confidentiality is governed by 35 U.S.C. 122 and 37 CFR 1.11 and 1.14. This collection is estimated to take 3 minutes to complete, including gathering, preparing, and submitting the completed application form to the USPTO. Time will vary depending upon the individual case. Any comments on the amount of time you require to complete this form and/or suggestions for reducing this burden, should be sent to the Chief Information Officer, U.S. Patent and Trademark Office, U.S. Department of Commerce, P.O. Box 1450, Alexandria, VA 22313-1450. DO NOT SEND FEES OR COMPLETED FORMS TO THIS ADDRESS. **SEND TO: Commissioner for Patents, P.O. Box 1450, Alexandria, VA 22313-1450.**

Petitioner Gel Blaster, Inc. - Ex. 1002, 0048

PTO/SB/26 (08-11)
Approved for use through 07/31/2012. OMB 0651-0031
U.S. Patent and Trademark Office; U.S. DEPARTMENT OF COMMERCE
Under the Paperwork Reduction Act of 1995, no persons are required to respond to a collection of information unless it displays a valid OMB control number.

TERMINAL DISCLAIMER TO OBVIATE A DOUBLE PATENTING REJECTION OVER A "PRIOR" PATENT	Docket Number (Optional) H6845.1001-US-B

In re Application of: Keith G. Meggs et al.

Application No.: 13/761,082-Conf. #8512

Filed: February 6, 2013

For: SOFT-PROJECTILE LAUNCHING DEVICE

The owner*, The Maya Group, Inc., of 100 percent interest in the instant application hereby disclaims, except as provided below, the terminal part of the statutory term of any patent granted on the instant application which would extend beyond the expiration date of the full statutory term of **prior patent** No. 8,371,282

as the term of said **prior patent** is presently shortened by any terminal disclaimer. The owner hereby agrees that any patent so granted on the instant application shall be enforceable only for and during such period that it and the **prior patent** are commonly owned. This agreement runs with any patent granted on the instant application and is binding upon the grantee, its successors or assigns.

In making the above disclaimer, the owner does not disclaim the terminal part of the term of any patent granted on the instant application that would extend to the expiration date of the full statutory term of the **prior patent**, "as the term of said **prior patent** is presently shortened by any terminal disclaimer," in the event that said **prior patent** later:

expires for failure to pay a maintenance fee;
is held unenforceable;
is found invalid by a court of competent jurisdiction;
is statutorily disclaimed in whole or terminally disclaimed under 37 CFR 1.321;
has all claims canceled by a reexamination certificate;
is reissued; or
is in any manner terminated prior to the expiration of its full statutory term as presently shortened by any terminal disclaimer.

Check either box 1 or 2 below, if appropriate.

1. ☐ For submissions on behalf of a business/organization (e.g., corporation, partnership, university, government agency, etc.), the undersigned is empowered to act on behalf of the business/organization.

I hereby declare that all statements made herein of my own knowledge are true and that all statements made on information and belief are believed to be true; and further that these statements were made with the knowledge that willful false statements and the like so made are punishable by fine or imprisonment, or both, under Section 1001 of Title 18 of the United States Code and that such willful false statements may jeopardize the validity of the application or any patent issued thereon.

2. ☒ The undersigned is an attorney or agent of record. Reg. No. 55,504

/Paul G. Novak/ — Signature
September 20, 2013 — Date

Paul G. Novak — Typed or printed name

(310) 772-8353 — Telephone Number

☒ Terminal disclaimer fee under 37 CFR 1.20(d) is included.

WARNING: Information on this form may become public. Credit card information should not be included on this form. Provide credit card information and authorization on PTO-2038.

*Statement under 37 CFR 3.73(b) is required if terminal disclaimer is signed by the assignee (owner). Form PTO/SB/96 may be used for making this certification. See MPEP § 324.

I hereby certify that this paper (along with any paper referred to as being attached or enclosed) is being transmitted via the Office electronic filing system in accordance with 37 CFR § 1.6(a)(4).

Dated: September 20, 2013 Electronic Signature for Pia Murphy: /Pia Murphy/

Electronic Patent Application Fee Transmittal

Application Number:	13761082
Filing Date:	06-Feb-2013
Title of Invention:	SOFT-PROJECTILE LAUNCHING DEVICE
First Named Inventor/Applicant Name:	KEITH G. MEGGS
Filer:	Paul Graham Novak/Pia Murphy
Attorney Docket Number:	H6845.1001-B

Filed as Small Entity

Utility under 35 USC 111(a) Filing Fees

Description	Fee Code	Quantity	Amount	Sub-Total in USD($)
Basic Filing:				
Pages:				
Claims:				
Miscellaneous-Filing:				
Petition:				
Patent-Appeals-and-Interference:				
Post-Allowance-and-Post-Issuance:				
Extension-of-Time:				

Description	Fee Code	Quantity	Amount	Sub-Total in USD($)
Miscellaneous:				
Statutory or Terminal Disclaimer	1814	1	160	160
		Total in USD ($)		**160**

Electronic Acknowledgement Receipt

EFS ID:	16919458
Application Number:	13761082
International Application Number:	
Confirmation Number:	8512
Title of Invention:	SOFT-PROJECTILE LAUNCHING DEVICE
First Named Inventor/Applicant Name:	KEITH G. MEGGS
Customer Number:	91477
Filer:	Paul Graham Novak/Pia Murphy
Filer Authorized By:	Paul Graham Novak
Attorney Docket Number:	H6845.1001-B
Receipt Date:	20-SEP-2013
Filing Date:	06-FEB-2013
Time Stamp:	19:38:37
Application Type:	Utility under 35 USC 111(a)

Payment information:

Submitted with Payment	yes
Payment Type	Credit Card
Payment was successfully received in RAM	$160
RAM confirmation Number	8605
Deposit Account	
Authorized User	

File Listing:

Document Number	Document Description	File Name	File Size(Bytes)/ Message Digest	Multi Part /.zip	Pages (if appl.)

Petitioner Gel-Blaster, Inc. - Ex. 1002, p. 0052

1	Terminal Disclaimer Filed	H6845_1001-US-B_-_Terminal_Disclaimer.pdf	106465 a04c419fc92ae12488c64995daa52f8b8a98b8f0	no	1
Warnings:					
Information:					
2	Fee Worksheet (SB06)	fee-info.pdf	30384 3b62a2b4b6bd7a869702c26df51f32e14a1c79d0	no	2
Warnings:					
Information:					
			Total Files Size (in bytes):	136849	

This Acknowledgement Receipt evidences receipt on the noted date by the USPTO of the indicated documents, characterized by the applicant, and including page counts, where applicable. It serves as evidence of receipt similar to a Post Card, as described in MPEP 503.

New Applications Under 35 U.S.C. 111
If a new application is being filed and the application includes the necessary components for a filing date (see 37 CFR 1.53(b)-(d) and MPEP 506), a Filing Receipt (37 CFR 1.54) will be issued in due course and the date shown on this Acknowledgement Receipt will establish the filing date of the application.

National Stage of an International Application under 35 U.S.C. 371
If a timely submission to enter the national stage of an international application is compliant with the conditions of 35 U.S.C. 371 and other applicable requirements a Form PCT/DO/EO/903 indicating acceptance of the application as a national stage submission under 35 U.S.C. 371 will be issued in addition to the Filing Receipt, in due course.

New International Application Filed with the USPTO as a Receiving Office
If a new international application is being filed and the international application includes the necessary components for an international filing date (see PCT Article 11 and MPEP 1810), a Notification of the International Application Number and of the International Filing Date (Form PCT/RO/105) will be issued in due course, subject to prescriptions concerning national security, and the date shown on this Acknowledgement Receipt will establish the international filing date of the application.

UNITED STATES PATENT AND TRADEMARK OFFICE

UNITED STATES DEPARTMENT OF COMMERCE
United States Patent and Trademark Office
Address: COMMISSIONER FOR PATENTS
P.O. Box 1450
Alexandria, Virginia 22313-1450
www.uspto.gov

NOTICE OF ALLOWANCE AND FEE(S) DUE

91477 7590 09/23/2013
Dickstein Shapiro LLP
1633 Broadway
New York, NY 10019

EXAMINER
DAVID, MICHAEL D

ART UNIT	PAPER NUMBER
3641	

DATE MAILED: 09/23/2013

APPLICATION NO.	FILING DATE	FIRST NAMED INVENTOR	ATTORNEY DOCKET NO.	CONFIRMATION NO.
13/761,082	02/06/2013	KEITH G. MEGGS	H6845.1001-B	8512

TITLE OF INVENTION: SOFT-PROJECTILE LAUNCHING DEVICE

APPLN. TYPE	ENTITY STATUS	ISSUE FEE DUE	PUBLICATION FEE DUE	PREV. PAID ISSUE FEE	TOTAL FEE(S) DUE	DATE DUE
nonprovisional	SMALL	$890	$300	$0	$1190	12/23/2013

THE APPLICATION IDENTIFIED ABOVE HAS BEEN EXAMINED AND IS ALLOWED FOR ISSUANCE AS A PATENT. PROSECUTION ON THE MERITS IS CLOSED. THIS NOTICE OF ALLOWANCE IS NOT A GRANT OF PATENT RIGHTS. THIS APPLICATION IS SUBJECT TO WITHDRAWAL FROM ISSUE AT THE INITIATIVE OF THE OFFICE OR UPON PETITION BY THE APPLICANT. SEE 37 CFR 1.313 AND MPEP 1308.

THE ISSUE FEE AND PUBLICATION FEE (IF REQUIRED) MUST BE PAID WITHIN THREE MONTHS FROM THE MAILING DATE OF THIS NOTICE OR THIS APPLICATION SHALL BE REGARDED AS ABANDONED. THIS STATUTORY PERIOD CANNOT BE EXTENDED. SEE 35 U.S.C. 151. THE ISSUE FEE DUE INDICATED ABOVE DOES NOT REFLECT A CREDIT FOR ANY PREVIOUSLY PAID ISSUE FEE IN THIS APPLICATION. IF AN ISSUE FEE HAS PREVIOUSLY BEEN PAID IN THIS APPLICATION (AS SHOWN ABOVE), THE RETURN OF PART B OF THIS FORM WILL BE CONSIDERED A REQUEST TO REAPPLY THE PREVIOUSLY PAID ISSUE FEE TOWARD THE ISSUE FEE NOW DUE.

HOW TO REPLY TO THIS NOTICE:

I. Review the ENTITY STATUS shown above. If the ENTITY STATUS is shown as SMALL or MICRO, verify whether entitlement to that entity status still applies.

If the ENTITY STATUS is the same as shown above, pay the TOTAL FEE(S) DUE shown above.

If the ENTITY STATUS is changed from that shown above, on PART B - FEE(S) TRANSMITTAL, complete section number 5 titled "Change in Entity Status (from status indicated above)".

For purposes of this notice, small entity fees are 1/2 the amount of undiscounted fees, and micro entity fees are 1/2 the amount of small entity fees.

II. PART B - FEE(S) TRANSMITTAL, or its equivalent, must be completed and returned to the United States Patent and Trademark Office (USPTO) with your ISSUE FEE and PUBLICATION FEE (if required). If you are charging the fee(s) to your deposit account, section "4b" of Part B - Fee(s) Transmittal should be completed and an extra copy of the form should be submitted. If an equivalent of Part B is filed, a request to reapply a previously paid issue fee must be clearly made, and delays in processing may occur due to the difficulty in recognizing the paper as an equivalent of Part B.

III. All communications regarding this application must give the application number. Please direct all communications prior to issuance to Mail Stop ISSUE FEE unless advised to the contrary.

IMPORTANT REMINDER: Utility patents issuing on applications filed on or after Dec. 12, 1980 may require payment of maintenance fees. It is patentee's responsibility to ensure timely payment of maintenance fees when due.

Petitioner Gel Blaster, Inc. - Ex. 1002, 0054

PART B - FEE(S) TRANSMITTAL

Complete and send this form, together with applicable fee(s), to: Mail **Mail Stop ISSUE FEE**
Commissioner for Patents
P.O. Box 1450
Alexandria, Virginia 22313-1450
or Fax (571)-273-2885

INSTRUCTIONS: This form should be used for transmitting the ISSUE FEE and PUBLICATION FEE (if required). Blocks 1 through 5 should be completed where appropriate. All further correspondence including the Patent, advance orders and notification of maintenance fees will be mailed to the current correspondence address as indicated unless corrected below or directed otherwise in Block 1, by (a) specifying a new correspondence address; and/or (b) indicating a separate "FEE ADDRESS" for maintenance fee notifications.

CURRENT CORRESPONDENCE ADDRESS (Note: Use Block 1 for any change of address)

91477 7590 09/23/2013
Dickstein Shapiro LLP
1633 Broadway
New York, NY 10019

Note: A certificate of mailing can only be used for domestic mailings of the Fee(s) Transmittal. This certificate cannot be used for any other accompanying papers. Each additional paper, such as an assignment or formal drawing, must have its own certificate of mailing or transmission.

Certificate of Mailing or Transmission
I hereby certify that this Fee(s) Transmittal is being deposited with the United States Postal Service with sufficient postage for first class mail in an envelope addressed to the Mail Stop ISSUE FEE address above, or being facsimile transmitted to the USPTO (571) 273-2885, on the date indicated below.

(Depositor's name)
(Signature)
(Date)

APPLICATION NO.	FILING DATE	FIRST NAMED INVENTOR	ATTORNEY DOCKET NO.	CONFIRMATION NO.
13/761,082	02/06/2013	KEITH G. MEGGS	H6845.1001-B	8512

TITLE OF INVENTION: SOFT-PROJECTILE LAUNCHING DEVICE

APPLN. TYPE	ENTITY STATUS	ISSUE FEE DUE	PUBLICATION FEE DUE	PREV. PAID ISSUE FEE	TOTAL FEE(S) DUE	DATE DUE
nonprovisional	SMALL	$890	$300	$0	$1190	12/23/2013

EXAMINER	ART UNIT	CLASS-SUBCLASS
DAVID, MICHAEL D	3641	124-056000

1. Change of correspondence address or indication of "Fee Address" (37 CFR 1.363).
- ❑ Change of correspondence address (or Change of Correspondence Address form PTO/SB/122) attached.
- ❑ "Fee Address" indication (or "Fee Address" Indication form PTO/SB/47; Rev 03-02 or more recent) attached. **Use of a Customer Number is required.**

2. For printing on the patent front page, list
(1) the names of up to 3 registered patent attorneys or agents OR, alternatively,
(2) the name of a single firm (having as a member a registered attorney or agent) and the names of up to 2 registered patent attorneys or agents. If no name is listed, no name will be printed.

1_____
2_____
3_____

3. ASSIGNEE NAME AND RESIDENCE DATA TO BE PRINTED ON THE PATENT (print or type)

PLEASE NOTE: Unless an assignee is identified below, no assignee data will appear on the patent. If an assignee is identified below, the document has been filed for recordation as set forth in 37 CFR 3.11. Completion of this form is NOT a substitute for filing an assignment.

(A) NAME OF ASSIGNEE (B) RESIDENCE: (CITY and STATE OR COUNTRY)

Please check the appropriate assignee category or categories (will not be printed on the patent) : ❑ Individual ❑ Corporation or other private group entity ❑ Government

4a. The following fee(s) are submitted:
- ❑ Issue Fee
- ❑ Publication Fee (No small entity discount permitted)
- ❑ Advance Order - # of Copies _____

4b. Payment of Fee(s): **(Please first reapply any previously paid issue fee shown above)**
- ❑ A check is enclosed.
- ❑ Payment by credit card. Form PTO-2038 is attached.
- ❑ The Director is hereby authorized to charge the required fee(s), any deficiency, or credit any overpayment, to Deposit Account Number _____ (enclose an extra copy of this form).

Petitioner Gel Blaster, Inc. - Ex. 1002, 0055

5. **Change in Entity Status** (from status indicated above)

❑ Applicant certifying micro entity status. See 37 CFR 1.29	NOTE: Absent a valid certification of Micro Entity Status (see form PTO/SB/15A and 15B), issue fee payment in the micro entity amount will not be accepted at the risk of application abandonment.
❑ Applicant asserting small entity status. See 37 CFR 1.27	NOTE: If the application was previously under micro entity status, checking this box will be taken to be a notification of loss of entitlement to micro entity status.
❑ Applicant changing to regular undiscounted fee status.	NOTE: Checking this box will be taken to be a notification of loss of entitlement to small or micro entity status, as applicable.

NOTE: The Issue Fee and Publication Fee (if required) will not be accepted from anyone other than the applicant; a registered attorney or agent; or the assignee or other party in interest as shown by the records of the United States Patent and Trademark Office.

Authorized Signature _____ Date _____

Typed or printed name _____ Registration No. _____

This collection of information is required by 37 CFR 1.311. The information is required to obtain or retain a benefit by the public which is to file (and by the USPTO to process) an application. Confidentiality is governed by 35 U.S.C. 122 and 37 CFR 1.14. This collection is estimated to take 12 minutes to complete, including gathering, preparing, and submitting the completed application form to the USPTO. Time will vary depending upon the individual case. Any comments on the amount of time you require to complete this form and/or suggestions for reducing this burden, should be sent to the Chief Information Officer, U.S. Patent and Trademark Office, U.S. Department of Commerce, P.O. Box 1450, Alexandria, Virginia 22313-1450. DO NOT SEND FEES OR COMPLETED FORMS TO THIS ADDRESS. SEND TO: Commissioner for Patents, P.O. Box 1450, Alexandria, Virginia 22313-1450.

Under the Paperwork Reduction Act of 1995, no persons are required to respond to a collection of information unless it displays a valid OMB control number.

Petitioner Gel Blaster, Inc. - Ex. 1002, 0058

UNITED STATES PATENT AND TRADEMARK OFFICE

UNITED STATES DEPARTMENT OF COMMERCE
United States Patent and Trademark Office
Address: COMMISSIONER FOR PATENTS
P.O. Box 1450
Alexandria, Virginia 22313-1450
www.uspto.gov

APPLICATION NO.	FILING DATE	FIRST NAMED INVENTOR	ATTORNEY DOCKET NO.	CONFIRMATION NO.
13/761,082	02/06/2013	KEITH G. MEGGS	H6845.1001-B	8512

91477 7590 09/23/2013
Dickstein Shapiro LLP
1633 Broadway
New York, NY 10019

EXAMINER
DAVID, MICHAEL D

ART UNIT	PAPER NUMBER
3641	

DATE MAILED: 09/23/2013

Determination of Patent Term Adjustment under 35 U.S.C. 154 (b)
(application filed on or after May 29, 2000)

The Patent Term Adjustment to date is 0 day(s). If the issue fee is paid on the date that is three months after the mailing date of this notice and the patent issues on the Tuesday before the date that is 28 weeks (six and a half months) after the mailing date of this notice, the Patent Term Adjustment will be 0 day(s).

If a Continued Prosecution Application (CPA) was filed in the above-identified application, the filing date that determines Patent Term Adjustment is the filing date of the most recent CPA.

Applicant will be able to obtain more detailed information by accessing the Patent Application Information Retrieval (PAIR) WEB site (http://pair.uspto.gov).

Any questions regarding the Patent Term Extension or Adjustment determination should be directed to the Office of Patent Legal Administration at (571)-272-7702. Questions relating to issue and publication fee payments should be directed to the Customer Service Center of the Office of Patent Publication at 1-(888)-786-0101 or (571)-272-4200.

Petitioner Gel Blaster, Inc. - Ex. 1002, 0057

Notice Requiring Inventor's Oath or Declaration	Application No. 13/761,082	Applicant(s) KEITH G. MEGGS	
	Examiner DAVID, MICHAEL D	Art Unit 3641	

This notice is an attachment to the Notice of Allowability (PTOL-37), or the Notice of Allowability For A Design Application (PTOL-37D).

An inventor's oath or declaration in compliance with 37 CFR 1.63 or 1.64 executed by or with respect to each inventor has not yet been submitted.

An oath or declaration in compliance with 37 CFR 1.63, or a substitute statement in compliance with 37 CFR 1.64, executed by or with respect to each inventor (for any inventor for which a compliant oath, declaration, or substitute statement has not yet been submitted) MUST be filed no later than the date on which the issue fee is paid. See 35 U.S.C. 115(f). Failure to timely comply will result in ABANDONMENT of this application.

A properly executed inventor's oath to declaration has not been received for the following inventor(s):

If applicant previously filed one or more oaths, declarations, or substitute statements, applicant may have received an informational notice regarding deficiencies therein.

The following deficiencies are noted:

INFORMAL ACTION PROBLEMS

- A properly executed inventor's oath or declaration has not been received for the following inventor(s):
  KEITH G. MEGGS
  Ronald Brawer
  Michael G. Hoeting
  Neil Hamilton

  Applicant may submit the inventor's oath or declaration at any time before the Notice of Allowance and Fee(s) Due, PTOL-85, is mailed.

Questions relating to this Notice should be directed to the Application Assistance Unit at 571-272-4200.

Privacy Act Statement

The Privacy Act of 1974 (P.L. 93-579) requires that you be given certain information in connection with your submission of the attached form related to a patent application or patent. Accordingly, pursuant to the requirements of the Act, please be advised that: (1) the general authority for the collection of this information is 35 U.S.C. 2(b)(2); (2) furnishing of the information solicited is voluntary; and (3) the principal purpose for which the information is used by the U.S. Patent and Trademark Office is to process and/or examine your submission related to a patent application or patent. If you do not furnish the requested information, the U.S. Patent and Trademark Office may not be able to process and/or examine your submission, which may result in termination of proceedings or abandonment of the application or expiration of the patent.

The information provided by you in this form will be subject to the following routine uses:

1. The information on this form will be treated confidentially to the extent allowed under the Freedom of Information Act (5 U.S.C. 552) and the Privacy Act (5 U.S.C 552a). Records from this system of records may be disclosed to the Department of Justice to determine whether disclosure of these records is required by the Freedom of Information Act.
2. A record from this system of records may be disclosed, as a routine use, in the course of presenting evidence to a court, magistrate, or administrative tribunal, including disclosures to opposing counsel in the course of settlement negotiations.
3. A record in this system of records may be disclosed, as a routine use, to a Member of Congress submitting a request involving an individual, to whom the record pertains, when the individual has requested assistance from the Member with respect to the subject matter of the record.
4. A record in this system of records may be disclosed, as a routine use, to a contractor of the Agency having need for the information in order to perform a contract. Recipients of information shall be required to comply with the requirements of the Privacy Act of 1974, as amended, pursuant to 5 U.S.C. 552a(m).
5. A record related to an International Application filed under the Patent Cooperation Treaty in this system of records may be disclosed, as a routine use, to the International Bureau of the World Intellectual Property Organization, pursuant to the Patent Cooperation Treaty.
6. A record in this system of records may be disclosed, as a routine use, to another federal agency for purposes of National Security review (35 U.S.C. 181) and for review pursuant to the Atomic Energy Act (42 U.S.C. 218(c)).
7. A record from this system of records may be disclosed, as a routine use, to the Administrator, General Services, or his/her designee, during an inspection of records conducted by GSA as part of that agency's responsibility to recommend improvements in records management practices and programs, under authority of 44 U.S.C. 2904 and 2906. Such disclosure shall be made in accordance with the GSA regulations governing inspection of records for this purpose, and any other relevant (i.e., GSA or Commerce) directive. Such disclosure shall not be used to make determinations about individuals.
8. A record from this system of records may be disclosed, as a routine use, to the public after either publication of the application pursuant to 35 U.S.C. 122(b) or issuance of a patent pursuant to 35 U.S.C. 151. Further, a record may be disclosed, subject to the limitations of 37 CFR 1.14, as a routine use, to the public if the record was filed in an application which became abandoned or in which the proceedings were terminated and which application is referenced by either a published application, an application open to public inspection or an issued patent.
9. A record from this system of records may be disclosed, as a routine use, to a Federal, State, or local law enforcement agency, if the USPTO becomes aware of a violation or potential violation of law or regulation.

Notice of Allowability	Application No.	Applicant(s)	
	13/761,082	MEGGS ET AL.	
	Examiner	Art Unit	
	MICHAEL DAVID	3641	

-- The MAILING DATE of this communication appears on the cover sheet with the correspondence address--

All claims being allowable, PROSECUTION ON THE MERITS IS (OR REMAINS) CLOSED in this application. If not included herewith (or previously mailed), a Notice of Allowance (PTOL-85) or other appropriate communication will be mailed in due course. **THIS NOTICE OF ALLOWABILITY IS NOT A GRANT OF PATENT RIGHTS.** This application is subject to withdrawal from issue at the initiative of the Office or upon petition by the applicant. See 37 CFR 1.313 and MPEP 1308.

1. ☒ This communication is responsive to *phone communication on 9/20/2013*.

2. ☐ An election was made by the applicant in response to a restriction requirement set forth during the interview on _____; the restriction requirement and election have been incorporated into this action.

3. ☒ The allowed claim(s) is/are *1-7 and 9-16*.

4. ☐ Acknowledgment is made of a claim for foreign priority under 35 U.S.C. § 119(a)-(d) or (f).
   a) ☐ All b) ☐ Some* c) ☐ None of the:
      1. ☐ Certified copies of the priority documents have been received.
      2. ☐ Certified copies of the priority documents have been received in Application No. _____ .
      3. ☐ Copies of the certified copies of the priority documents have been received in this national stage application from the International Bureau (PCT Rule 17.2(a)).

   * Certified copies not received: _____.

Applicant has THREE MONTHS FROM THE "MAILING DATE" of this communication to file a reply complying with the requirements noted below. Failure to timely comply will result in ABANDONMENT of this application.
THIS THREE-MONTH PERIOD IS NOT EXTENDABLE.

5. ☐ A SUBSTITUTE OATH OR DECLARATION must be submitted. Note the attached EXAMINER'S AMENDMENT or NOTICE OF INFORMAL PATENT APPLICATION (PTO-152) which gives reason(s) why the oath or declaration is deficient.

6. ☐ CORRECTED DRAWINGS (as "replacement sheets") must be submitted.
   (a) ☐ including changes required by the Notice of Draftsperson's Patent Drawing Review (PTO-948) attached
      1) ☐ hereto or 2) ☐ to Paper No./Mail Date _____.
   (b) ☐ including changes required by the attached Examiner's Amendment / Comment or in the Office action of Paper No./Mail Date _____.

   Identifying indicia such as the application number (see 37 CFR 1.84(c)) should be written on the drawings in the front (not the back) of each sheet. Replacement sheet(s) should be labeled as such in the header according to 37 CFR 1.121(d).

7. ☐ DEPOSIT OF and/or INFORMATION about the deposit of BIOLOGICAL MATERIAL must be submitted. Note the attached Examiner's comment regarding REQUIREMENT FOR THE DEPOSIT OF BIOLOGICAL MATERIAL.

Attachment(s)

1. ☒ Notice of References Cited (PTO-892)
2. ☐ Notice of Draftperson's Patent Drawing Review (PTO-948)
3. ☒ Information Disclosure Statements (PTO/SB/08), Paper No./Mail Date 2/6/2013
4. ☐ Examiner's Comment Regarding Requirement for Deposit of Biological Material
5. ☐ Notice of Informal Patent Application
6. ☐ Interview Summary (PTO-413), Paper No./Mail Date _____ .
7. ☒ Examiner's Amendment/Comment
8. ☐ Examiner's Statement of Reasons for Allowance
9. ☐ Other _____.

/Michael David/ Primary Examiner, Art Unit 3641	

Petitioner Gel Blaster, Inc. - Ex. 1002, 0060

The present application is being examined under the pre-AIA first to invent provisions.

EXAMINER'S AMENDMENT

1. An examiner's amendment to the record appears below. Should the changes and/or additions be unacceptable to applicant, an amendment may be filed as provided by 37 CFR 1.312. To ensure consideration of such an amendment, it MUST be submitted no later than the payment of the issue fee.

Authorization for this examiner's amendment was given in a telephone interview with Paul Novack on 9/20/13.

Claims 1-7 and 9-16 are allowed.

Claim 8 has been canceled and the features of claim 8 have been incorporated into claim 1 (see below).

The claims have been amended as follows:

1. A projectile launching system, comprising: ammunition comprising a plurality of <u>substantially spherical</u> soft-projectiles formed from hydrated super absorbent polymer; and a projectile launcher for launching the ammunition in free flight.

2. Any inquiry concerning this communication or earlier communications from the examiner should be directed to MICHAEL D. DAVID whose telephone number is (571)270-3737. The examiner can normally be reached on Monday-Friday, 8:00am-5:00pm.

If attempts to reach the examiner by telephone are unsuccessful, the examiner's supervisor, Michael Carone can be reached on 571-272-6873. The fax phone number for the organization where this application or proceeding is assigned is 571-273-8300.

Information regarding the status of an application may be obtained from the Patent Application Information Retrieval (PAIR) system. Status information for published applications may be obtained from either Private PAIR or Public PAIR. Status information for unpublished applications is available through Private PAIR only. For more information about the PAIR system, see http://pair-direct.uspto.gov. Should you have questions on access to the Private PAIR system, contact the Electronic Business Center (EBC) at 866-217-9197 (toll-free). If you would like assistance from a USPTO Customer Service Representative or access to the automated information system, call 800-786-9199 (IN USA OR CANADA) or 571-272-1000.

/Michael David/
Primary Examiner, Art Unit 3641

Notice of References Cited	Application/Control No. 13/761,082	Applicant(s)/Patent Under Reexamination MEGGS ET AL.	
	Examiner MICHAEL DAVID	Art Unit 3641	Page 1 of 1

U.S. PATENT DOCUMENTS

*		Document Number Country Code-Number-Kind Code	Date MM-YYYY	Name	Classification
*	A	US-1,202,227 A	10-1916	Sandifur	474/81
*	B	US-3,648,561 A	03-1972	Stoner, Eugene M.	89/11
*	C	US-5,885,912 A	03-1999	Bumbarger, Thomas H.	442/239
*	D	US-2004/0104533 A1	06-2004	Larson et al.	273/404
*	E	US-2004/0212151 A1	10-2004	Peiten et al.	273/404
*	F	US-2010/0059237 A1	03-2010	Cordani, Peter	169/54
*	G	US-7,992,647 B2	08-2011	Cordani, Peter	169/30
*	H	US-2011/0271941 A1	11-2011	Meggs, Keith G.	124/65
*	I	US-2011/0271940 A1	11-2011	Meggs et al.	124/56
*	J	US-2011/0290103 A1	12-2011	HERRMANN et al.	89/18
*	K	US-2012/0152221 A1	06-2012	Meggs, Keith G.	124/41.1
*	L	US-8,371,282 B2	02-2013	Meggs et al.	124/56
	M	US-			

FOREIGN PATENT DOCUMENTS

*		Document Number Country Code-Number-Kind Code	Date MM-YYYY	Country	Name	Classification
	N					
	O					
	P					
	Q					
	R					
	S					
	T					

NON-PATENT DOCUMENTS

*		Include as applicable: Author, Title Date, Publisher, Edition or Volume, Pertinent Pages)
	U	
	V	
	W	
	X	

*A copy of this reference is not being furnished with this Office action. (See MPEP § 707.05(a).)
Dates in MM-YYYY format are publication dates. Classifications may be US or foreign.

UNITED STATES PATENT AND TRADEMARK OFFICE

UNITED STATES DEPARTMENT OF COMMERCE
United States Patent and Trademark Office
Address: COMMISSIONER FOR PATENTS
P.O. Box 1450
Alexandria, Virginia 22313-1450
www.uspto.gov

BIB DATA SHEET

CONFIRMATION NO. 8512

SERIAL NUMBER	FILING or 371(c) DATE	CLASS	GROUP ART UNIT	ATTORNEY DOCKET NO.
13/761,082	02/06/2013 **RULE**	124	3641	H6845.1001-B

APPLICANTS

The Maya Group, Inc., Torrance, CA
KEITH G. MEGGS, Rancho Palos Verdes, CA;
Ronald Brawer, Manhattan Beach, CA;
Michael G. Hoeting, Cincinnati, OH;
Neil Hamilton, Covington, KY;

**** CONTINUING DATA ***************************

This application is a DIV of 12/777,134 05/10/2010 PAT 8371282

**** FOREIGN APPLICATIONS ***************************

**** IF REQUIRED, FOREIGN FILING LICENSE GRANTED **** ** SMALL ENTITY **
06/13/2013

Foreign Priority claimed ☐ Yes ☑ No 35 USC 119(a-d) conditions met ☐ Yes ☑ No Verified and Acknowledged /MICHAEL D DAVID/ Examiner's Signature	☐ Met after Allowance Initials	STATE OR COUNTRY	SHEETS DRAWINGS	TOTAL CLAIMS	INDEPENDENT CLAIMS
		CA	3	16	1

ADDRESS

Dickstein Shapiro LLP
1633 Broadway
New York, NY 10019
UNITED STATES

TITLE

SOFT-PROJECTILE LAUNCHING DEVICE

FILING FEE RECEIVED		
598	FEES: Authority has been given in Paper No._____ to charge/credit DEPOSIT ACCOUNT No._____ for following:	☐ All Fees ☐ 1.16 Fees (Filing) ☐ 1.17 Fees (Processing Ext. of time) ☐ 1.18 Fees (Issue) ☐ Other _____ ☐ Credit

EAST Search History

EAST Search History (Prior Art)

Ref #	Hits	Search Query	DBs	Default Operator	Plurals	Time Stamp
L1	15	("20090145412" | "3408997" | "3472218" | "3631555" | "4834059" | "5285765" | "5622159" | "5697179" | "6386293" | "7004813" | "0071162").PN.	US-PGPUB; USPAT; USOCR; FPRS; EPO; JPO	OR	OFF	2013/09/20 23:05
L2	27	(US-20040104533-$ or US-20040212151-$ or US-20100059237-$ or US-20110271941-$ or US-20110271940-$ or US-20120152221-$ or US-20110290103-$).did. or (US-7004813-$ or US-6386293-$ or US-5622159-$ or US-3631555-$ or US-3472218-$ or US-3408997-$ or US-1202227-$ or US-5885912-$ or US-7992647-$ or US-5697179-$ or US-4834059-$ or US-5285765-$ or US-3648561-$ or US-8371282-$).did. or (US-3472218-$ or US-3408997-$ or US-1202227-$).did. or (US-20050227580-$ or US-6386293-$ or US-5622159-$).did.	US-PGPUB; USPAT; USOCR; DERWENT	OR	OFF	2013/09/20 23:06
L3	16	l2 not l1	US-PGPUB; USPAT; USOCR; FPRS; EPO; JPO; DERWENT	OR	OFF	2013/09/20 23:06
S1	910	(124/1,17,63,79).CCLS.	US-PGPUB; USPAT; USOCR; FPRS; EPO; JPO; DERWENT	OR	OFF	2012/07/11 11:25
S2	1614	(124/1,17,63,79,16).CCLS.	US-PGPUB; USPAT; USOCR; FPRS; EPO; JPO; DERWENT	OR	OFF	2012/07/11 11:25
S3	13	US-7004813-$.DID. OR US-6386293-$.DID. OR US-1202227-$.DID. OR US-3408997-$.DID. OR US-3631555-$.DID. OR US-5622159-$.DID. OR US-3472218-$.DID.	US-PGPUB; USPAT; USOCR; FPRS; EPO; JPO; DERWENT	OR	OFF	2012/07/11 11:26
S4	30	(projectile or projectiles) and (super with absorbent with polymer)	US-PGPUB; USPAT;	OR	OFF	2012/07/11 11:27

			USOCR; FPRS; EPO; JPO; DERWENT			
S5	5	((KEITH) near2 (MEGGS)).INV.	US-PGPUB; USPAT; USOCR	OR	OFF	2012/10/05 11:10
S6	1	((RONALD) near2 (BRAWER)).INV.	US-PGPUB; USPAT; USOCR	OR	OFF	2012/10/05 11:10
S7	43	((MICHAEL) near2 (HOETING)).INV.	US-PGPUB; USPAT; USOCR	OR	OFF	2012/10/05 11:10
S8	161	((NEIL) near2 (HAMILTON)).INV.	US-PGPUB; USPAT; USOCR	OR	OFF	2012/10/05 11:10
S9	51	(S5 or S6 or S7 or S8) and (ammunition or polymer)	US-PGPUB; USPAT; USOCR; FPRS; EPO; JPO; DERWENT	OR	OFF	2012/10/05 11:11
S10	13	(S5 or S6 or S7 or S8) and (ammunition or (absorbent polymer))	US-PGPUB; USPAT; USOCR; FPRS; EPO; JPO; DERWENT	AND	OFF	2012/10/05 11:11
S11	1956	(124/1,17,63,79,16,56).CCLS.	US-PGPUB; USPAT; USOCR; FPRS; EPO; JPO; DERWENT	OR	OFF	2012/10/08 18:09
S12	2155	(124/1,17,63,79,16,56,45).CCLS.	US-PGPUB; USPAT; USOCR; FPRS; EPO; JPO; DERWENT	OR	OFF	2012/10/08 18:13
S13	15	("20090145412" | "3408997" | "3472218" | "3631555" | "4834059" | "5285765" | "5622159" | "5697179" | "6386293" | "7004813" | "0071162").PN.	US-PGPUB; USPAT; USOCR; FPRS; EPO; JPO	OR	OFF	2012/11/20 11:48
S14	15	("20090145412" | "3408997" | "3472218" | "3631555" | "4834059" | "5285765" | "5622159" | "5697179" | "6386293" | "7004813" | "0071162").PN.	US-PGPUB; USPAT; USOCR; FPRS; EPO; JPO	OR	OFF	2012/11/20 15:28

S15	1	S14 and (super absorbent polymer)	US-PGPUB; USPAT; USOCR; FPRS; EPO; JPO	AND	OFF	2012/11/20 15:28
S16	2165	(124/1,17,63,79,16,56,45).CCLS.	US-PGPUB; USPAT; USOCR; FPRS; EPO; JPO; DERWENT	OR	OFF	2012/12/05 23:26
S17	5	((KEITH) near2 (MEGGS)).INV.	US-PGPUB; USPAT; USOCR	OR	OFF	2012/12/05 23:28
S18	2	("5697179").PN.	US-PGPUB; USPAT; USOCR; FPRS; EPO; JPO; DERWENT	OR	OFF	2012/12/05 23:58
S19	3	("4834059").PN.	US-PGPUB; USPAT; USOCR; FPRS; EPO; JPO; DERWENT	OR	OFF	2012/12/05 23:59
S20	2	("5285765").PN.	US-PGPUB; USPAT; USOCR; FPRS; EPO; JPO; DERWENT	OR	OFF	2012/12/06 00:00
S21	1558	(124/1,17,63,79,16,56,45).CCLS.	US-PGPUB; USPAT	OR	OFF	2013/05/16 16:40
S22	2401	(124/1,17,63,79,16,56,45,65).CCLS.	US-PGPUB; USPAT; USOCR; FPRS; EPO; JPO; DERWENT	OR	OFF	2013/05/16 16:46
S23	1701	(124/1,17,63,79,16,56,45,65).CCLS.	US-PGPUB; USPAT	OR	OFF	2013/05/16 16:46
S24	4	("20110290103" | "3648561").PN.	US-PGPUB; USPAT; USOCR; FPRS; EPO; JPO; DERWENT	OR	OFF	2013/05/17 15:39
S25	2	("20110290103" | "3648561").PN.	US-PGPUB;	OR	OFF	2013/05/17 15:39

			USPAT			
S26	162	"71162"	US-PGPUB; USPAT; USOCR; FPRS; EPO; JPO; DERWENT	OR	OFF	2013/07/28 23:52
S27	11	(("0071162") or ("5415151") or ("6386293") or ("7004813") or ("20090145412")).PN.	US-PGPUB; USPAT; USOCR; FPRS; EPO; JPO; DERWENT	OR	OFF	2013/07/28 23:53
S28	6	(("0071162") or ("5415151") or ("6386293") or ("7004813") or ("20090145412")).PN.	US-PGPUB; USPAT; USOCR; FPRS; EPO; JPO	OR	OFF	2013/07/28 23:53
S29	1	S28 and absorbent	US-PGPUB; USPAT; USOCR; FPRS; EPO; JPO; DERWENT	OR	OFF	2013/07/28 23:54
S30	1	S28 and super	US-PGPUB; USPAT; USOCR; FPRS; EPO; JPO; DERWENT	OR	OFF	2013/07/28 23:54
S31	1710	(124/1,17,63,79,16,56,45,65).CCLS.	US-PGPUB; USPAT	OR	OFF	2013/07/29 10:06
S32	1720	(124/1,17,63,79,16,56,45,65).CCLS.	US-PGPUB; USPAT	OR	OFF	2013/09/17 11:43
S33	47	((MICHAEL) near2 (HOETING)).INV.	US-PGPUB; USPAT; USOCR	OR	OFF	2013/09/17 11:49

9/20/2013 11:07:34 PM
C:\Users\mdavid\Documents\EAST\Workspaces\12777134 soft projectile launching device.wsp

Used in Lieu of PTO/SB/08A/B
(Based on PTO 10-07 version)

Substitute for form 1449/PTO

INFORMATION DISCLOSURE STATEMENT BY APPLICANT

(Use as many sheets as necessary)

Sheet	1	of	1

Complete if Known	
Application Number	Not Yet Assigned
Filing Date	Concurrently Herewith
First Named Inventor	Keith G. Meggs
Art Unit	Not Yet Assigned
Examiner Name	Not Yet Assigned
Attorney Docket Number	H6845.1001-US-B

U.S. PATENT DOCUMENTS

Examiner Initials*	Cite No.[1]	Document Number Number-Kind Code[2] (*if known*)	Publication Date MM-DD-YYYY	Name of Patentee or Applicant of Cited Document	Pages, Columns, Lines, Where Relevant Passages or Relevant Figures Appear
	AA*	3,408,997	11-05-1968	Ruymbecke	
	AB*	3,472,218	10-14-1969	La Mers	
	AC*	3,631,555	01-04-1972	Hurst et al.	
	AD*	4,834,059	05-30-1989	Moorhouse et al.	
	AE*	5,697,179	12-16-1997	Vanmoor	
	AF*	6,386,293	05-14-2002	Bartlett	
	AG*	5,285,765	02-15-1994	Lee	
	AH*	5,622,159	04-22-1997	Liu et al.	
	AI*	7,004,813	02-28-2006	Zuloff	
	AJ*	2009-0145412	06-11-2009	Barish	
	AK*	71,162	11-19-1867	Hall	

FOREIGN PATENT DOCUMENTS

Examiner Initials*	Cite No.[1]	Foreign Patent Document Country Code[3]-Number[4]-Kind Code[5] (*if known*)	Publication Date MM-DD-YYYY	Name of Patentee or Applicant of Cited Document	Pages, Columns, Lines, Where Relevant Passages Or Relevant Figures Appear	T[6]
	BA*	EP-2253375-A1	11-24-2010	Nippon Catalytic Chem Ind		
	BB*	GB-316,645	01-04-1972	Herlach et al.		

*EXAMINER: Initial if reference considered, whether or not citation is in conformance with MPEP 609. Draw line through citation if not in conformance and not considered. Include copy of this form with next communication to applicant. * CITE NO.: Those application(s) which are marked with an single asterisk (*) next to the Cite No. are not supplied (under 37 CFR 1.98(a)(2)(iii)) because that application was filed after June 30, 2003 or is available in the IFW. [1] Applicant's unique citation designation number (optional). [2] See Kinds Codes of USPTO Patent Documents at www.uspto.gov or MPEP 901.04. [3] Enter Office that issued the document, by the two-letter code (WIPO Standard ST.3). [4] For Japanese patent documents, the indication of the year of the reign of the Emperor must precede the serial number of the patent document. [5] Kind of document by the appropriate symbols as indicated on the document under WIPO Standard ST.16 if possible. [6] Applicant is to place a check mark here if English language Translation is attached.

NON PATENT LITERATURE DOCUMENTS

Examiner Initials*	Cite No.[1]	Include name of the author (in CAPITAL LETTERS), title of the article (when appropriate), title of the item (book, magazine, journal, serial, symposium, catalog, etc.), date, page(s), volume-issue number(s), publisher, city and/or country where published.	T[2]
	CA*	International Search Report and Written Opinion for Corresponding PCT Application No. PCT/US2011/066307 dated April 24, 2012	
	CB*	International Search Report and Written Opinion for Corresponding PCT Application No. PCT/US2011/035801 dated October 19, 2011	

*EXAMINER: Initial if reference considered, whether or not citation is in conformance with MPEP 609. Draw line through citation if not in conformance and not considered. Include copy of this form with next communication to applicant.

[1]Applicant's unique citation designation number (optional). [2]Applicant is to place a check mark here if English language Translation is attached.

Examiner Signature	/Michael David/	Date Considered	09/20/2013

ALL REFERENCES CONSIDERED EXCEPT WHERE LINED THROUGH. /M.D./

Search Notes	Application/Control No.	Applicant(s)/Patent Under Reexamination
	13761082	MEGGS ET AL.
	Examiner	**Art Unit**
	MICHAEL DAVID	3641

CPC- SEARCHED

Symbol	Date	Examiner

CPC COMBINATION SETS - SEARCHED

Symbol	Date	Examiner

US CLASSIFICATION SEARCHED

Class	Subclass	Date	Examiner
124	1,17,63,79,16,56,45,65	September 2013	mdd

SEARCH NOTES

Search Notes	Date	Examiner
EAST Class/Subclass and Text Search	September 2013	mdd

INTERFERENCE SEARCH

US Class/ CPC Symbol	US Subclass / CPC Group	Date	Examiner
124	see search notes	September 2013	mdd

	/MICHAEL DAVID/ Primary Examiner.Art Unit 3641

Petitioner Gel Blaster, Inc. - Ex. 1002, 0070

Issue Classification	Application/Control No.	Applicant(s)/Patent Under Reexamination
	13761082	MEGGS ET AL.
	Examiner	**Art Unit**
	MICHAEL DAVID	3641

CPC					
Symbol				**Type**	**Version**
			/		
			/		
			/		
			/		
			/		
			/		
			/		
			/		
			/		
			/		
			/		
			/		
			/		
			/		

CPC Combination Sets						
Symbol				**Type**	**Set**	**Ranking**	**Version**
			/				
			/				

NONE (Assistant Examiner) (Date)		**Total Claims Allowed:** 15	
/MICHAEL DAVID/ Primary Examiner.Art Unit 3641 (Primary Examiner)	09/20/2013 (Date)	O.G. Print Claim(s) 1	O.G. Print Figure 1

Petitioner Gel Blaster, Inc. - Ex. 1002, 0071

Issue Classification	Application/Control No.	Applicant(s)/Patent Under Reexamination
	13761082	MEGGS ET AL.
	Examiner	**Art Unit**
	MICHAEL DAVID	3641

US ORIGINAL CLASSIFICATION		INTERNATIONAL CLASSIFICATION										
CLASS	SUBCLASS	CLAIMED					NON-CLAIMED					
124	56	F	4	1	B	11 / 00 (2013.01.01)						

CROSS REFERENCE(S)					
CLASS	SUBCLASS (ONE SUBCLASS PER BLOCK)				
124	45				

NONE (Assistant Examiner)	(Date)	Total Claims Allowed: 15	
/MICHAEL DAVID/ Primary Examiner.Art Unit 3641 (Primary Examiner)	09/20/2013 (Date)	O.G. Print Claim(s) 1	O.G. Print Figure 1

Issue Classification	Application/Control No.	Applicant(s)/Patent Under Reexamination
	13761082	MEGGS ET AL.
	Examiner	**Art Unit**
	MICHAEL DAVID	3641

☐ Claims renumbered in the same order as presented by applicant ☐ CPA ☒ T.D. ☐ R.1.47

Final	Original	Final	Original	Final	Original	Final	Original	Final	Original	Final	Original	Final	Original	Final	Original
1	1														
2	2														
3	3														
4	4														
5	5														
6	6														
7	7														
-	8														
10	9														
11	10														
12	11														
13	12														
14	13														
15	14														
8	15														
9	16														

NONE (Assistant Examiner)	(Date)	**Total Claims Allowed:** 15	
/MICHAEL DAVID/ Primary Examiner.Art Unit 3641 (Primary Examiner)	09/20/2013 (Date)	O.G. Print Claim(s) 1	O.G. Print Figure 1

Petitioner Gel Blaster, Inc. - Ex. 1002, 0073

UNITED STATES PATENT AND TRADEMARK OFFICE

UNITED STATES DEPARTMENT OF COMMERCE
United States Patent and Trademark Office
Address: COMMISSIONER FOR PATENTS
P.O. Box 1450
Alexandria, Virginia 22313-1450
www.uspto.gov

APPLICATION NUMBER	FILING OR 371(C) DATE	FIRST NAMED APPLICANT	ATTY. DOCKET NO./TITLE
13/761,082	02/06/2013	KEITH G. MEGGS	H6845.1001-B

CONFIRMATION NO. 8512

PUBLICATION NOTICE

OC000000064031462

91477
Dickstein Shapiro LLP
1633 Broadway
New York, NY 10019

Title:SOFT-PROJECTILE LAUNCHING DEVICE

Publication No.US-2013-0247891-A1
Publication Date:09/26/2013

NOTICE OF PUBLICATION OF APPLICATION

The above-identified application will be electronically published as a patent application publication pursuant to 37 CFR 1.211, et seq. The patent application publication number and publication date are set forth above.

The publication may be accessed through the USPTO's publically available Searchable Databases via the Internet at www.uspto.gov. The direct link to access the publication is currently http://www.uspto.gov/patft/.

The publication process established by the Office does not provide for mailing a copy of the publication to applicant. A copy of the publication may be obtained from the Office upon payment of the appropriate fee set forth in 37 CFR 1.19(a)(1). Orders for copies of patent application publications are handled by the USPTO's Office of Public Records. The Office of Public Records can be reached by telephone at (703) 308-9726 or (800) 972-6382, by facsimile at (703) 305-8759, by mail addressed to the United States Patent and Trademark Office, Office of Public Records, Alexandria, VA 22313-1450 or via the Internet.

In addition, information on the status of the application, including the mailing date of Office actions and the dates of receipt of correspondence filed in the Office, may also be accessed via the Internet through the Patent Electronic Business Center at www.uspto.gov using the public side of the Patent Application Information and Retrieval (PAIR) system. The direct link to access this status information is currently http://pair.uspto.gov/. Prior to publication, such status information is confidential and may only be obtained by applicant using the private side of PAIR.

Further assistance in electronically accessing the publication, or about PAIR, is available by calling the Patent Electronic Business Center at 1-866-217-9197.

Office of Data Managment, Application Assistance Unit (571) 272-4000, or (571) 272-4200, or 1-888-786-0101

Petitioner Gel Blaster, Inc. - Ex. 1002, 0074

UNITED STATES PATENT AND TRADEMARK OFFICE

UNITED STATES DEPARTMENT OF COMMERCE
United States Patent and Trademark Office
Address: COMMISSIONER FOR PATENTS
P.O. Box 1450
Alexandria, Virginia 22313-1450
www.uspto.gov

APPLICATION NUMBER	FILING OR 371(C) DATE	FIRST NAMED APPLICANT	ATTY. DOCKET NO./TITLE
13/761,082	02/06/2013	KEITH G. MEGGS	H6845.1001-B

CONFIRMATION NO. 8512

POA ACCEPTANCE LETTER

91477
Dickstein Shapiro LLP
1633 Broadway
New York, NY 10019

OC000000063982162

Date Mailed: 09/27/2013

NOTICE OF ACCEPTANCE OF POWER OF ATTORNEY

This is in response to the Power of Attorney filed 09/20/2013.

The Power of Attorney in this application is accepted. Correspondence in this application will be mailed to the above address as provided by 37 CFR 1.33.

/nhassani/

Office of Data Management, Application Assistance Unit (571) 272-4000, or (571) 272-4200, or 1-888-786-0101

Application Number	Application/Control No.	Applicant(s)/Patent under Reexamination
	13/761,082	MEGGS ET AL.

Document Code - DISQ	Internal Document – DO NOT MAIL

TERMINAL DISCLAIMER	☒ APPROVED	☐ DISAPPROVED
Date Filed : 9/20/13	This patent is subject to a Terminal Disclaimer	

Approved/Disapproved by:

Felicia D. Roberts

8,371,282

U.S. Patent and Trademark Office

DECLARATION (37 CFR 1.63) FOR UTILITY OR DESIGN APPLICATION USING AN APPLICATION DATA SHEET (37 CFR 1.76)

Title of Invention	SOFT-PROJECTILE LAUNCHING DEVICE

As the below named inventor, I declare that:

This declaration is directed to:

- [ ] The attached application, or
- [x] United States application or PCT international application number 13/761,082 filed on 02/06/2013.

The above-identified application was made or authorized to be made by me.

I believe that I am the original inventor or an original joint inventor of a claimed invention in the application.

I have reviewed and understand the contents of the above-identified application, including the claims.

I acknowledge the duty to disclose to the United States Patent and Trademark Office all information known to me to be material to patentability as defined in 37 CFR 1.56, including for continuation-in-part applications, material information which became available between the filing date of the prior application and the national or PCT International filing date of the continuation-in-part application.

All statements made herein of my/our own knowledge are true, all statements made herein on information and belief are believed to be true, and further that these statements were made with the knowledge that willful false statements and the like are punishable under 18 U.S.C. 1001 by fine or imprisonment of not more than five (5) years, or both, and may jeopardize the validity of the application or any patent issuing thereon.

WARNING:

Petitioner/applicant is cautioned to avoid submitting personal information in documents filed in a patent application that may contribute to identity theft. Personal information such as social security numbers, bank account numbers, or credit card numbers (other than a check or credit card authorization form PTO-2038 submitted for payment purposes) is never required by the USPTO to support a petition or an application. If this type of personal information is included in documents submitted to the USPTO, petitioners/applicants should consider redacting such personal information from the documents before submitting them to the USPTO. Petitioner/applicant is advised that the record of a patent application is available to the public after publication of the application (unless a non-publication request in compliance with 37 CFR 1.213(a) is made in the application) or issuance of a patent. Furthermore, the record from an abandoned application may also be available to the public if the application is referenced in a published application or an issued patent (see 37 CFR 1.14). Checks and credit card authorization forms PTO-2038 submitted for payment purposes are not retained in the application file and therefore are not publicly available.

LEGAL NAME OF INVENTOR

Inventor: Keith G. Meggs Date (Optional): DEC. 16, 2013

**Signature: /

** An electronic S-signature is permitted. The S-signature must consist only of letters, or Arabic numerals, or both, with appropriate spaces and commas, periods, apostrophes, or hyphens for punctuation, and the person signing the correspondence must insert his or her own S-signature with a first single forward slash mark before and a second single forward slash mark after the S-signature (*e.g.*, /Dr. James T. Jones, Jr./).

DOCSLA-112311v1

DECLARATION (37 CFR 1.63) FOR UTILITY OR DESIGN APPLICATION USING AN APPLICATION DATA SHEET (37 CFR 1.76)

Title of Invention	SOFT-PROJECTILE LAUNCHING DEVICE

As the below named inventor, I declare that:

This declaration is directed to:

☐ The attached application, or

☒ United States application or PCT international application number 13/761,082 filed on 02/06/2013.

The above-identified application was made or authorized to be made by me.

I believe that I am the original inventor or an original joint inventor of a claimed invention in the application.

I have reviewed and understand the contents of the above-identified application, including the claims.

I acknowledge the duty to disclose to the United States Patent and Trademark Office all information known to me to be material to patentability as defined in 37 CFR 1.56, including for continuation-in-part applications, material information which became available between the filing date of the prior application and the national or PCT International filing date of the continuation-in-part application.

All statements made herein of my/our own knowledge are true, all statements made herein on information and belief are believed to be true, and further that these statements were made with the knowledge that willful false statements and the like are punishable under 18 U.S.C. 1001 by fine or imprisonment of not more than five (5) years, or both, and may jeopardize the validity of the application or any patent issuing thereon.

WARNING:

Petitioner/applicant is cautioned to avoid submitting personal information in documents filed in a patent application that may contribute to identity theft. Personal information such as social security numbers, bank account numbers, or credit card numbers (other than a check or credit card authorization form PTO-2038 submitted for payment purposes) is never required by the USPTO to support a petition or an application. If this type of personal information is included in documents submitted to the USPTO, petitioners/applicants should consider redacting such personal information from the documents before submitting them to the USPTO. Petitioner/applicant is advised that the record of a patent application is available to the public after publication of the application (unless a non-publication request in compliance with 37 CFR 1.213(a) is made in the application) or issuance of a patent. Furthermore, the record from an abandoned application may also be available to the public if the application is referenced in a published application or an issued patent (see 37 CFR 1.14). Checks and credit card authorization forms PTO-2038 submitted for payment purposes are not retained in the application file and therefore are not publicly available.

LEGAL NAME OF INVENTOR

Inventor: Ronald Brawer Date (Optional): _____

**Signature: Ronald Brawer

** An electronic S-signature is permitted. The S-signature must consist only of letters, or Arabic numerals, or both, with appropriate spaces and commas, periods, apostrophes, or hyphens for punctuation, and the person signing the correspondence must insert his or her own S-signature with a first single forward slash mark before and a second single forward slash mark after the S-signature (*e.g.*, /Dr. James T. Jones, Jr./).

DECLARATION (37 CFR 1.63) FOR UTILITY OR DESIGN APPLICATION USING AN APPLICATION DATA SHEET (37 CFR 1.76)

Title of Invention	SOFT-PROJECTILE LAUNCHING DEVICE

As the below named inventor, I declare that:

This declaration is directed to:

☐ The attached application, or

☒ United States application or PCT international application number 13/761,082 filed on 02/06/2013 .

The above-identified application was made or authorized to be made by me.

I believe that I am the original inventor or an original joint inventor of a claimed invention in the application.

I have reviewed and understand the contents of the above-identified application, including the claims.

I acknowledge the duty to disclose to the United States Patent and Trademark Office all information known to me to be material to patentability as defined in 37 CFR 1.56, including for continuation-in-part applications, material information which became available between the filing date of the prior application and the national or PCT International filing date of the continuation-in-part application.

All statements made herein of my/our own knowledge are true, all statements made herein on information and belief are believed to be true, and further that these statements were made with the knowledge that willful false statements and the like are punishable under 18 U.S.C. 1001 by fine or imprisonment of not more than five (5) years, or both, and may jeopardize the validity of the application or any patent issuing thereon.

WARNING:

Petitioner/applicant is cautioned to avoid submitting personal information in documents filed in a patent application that may contribute to identity theft. Personal information such as social security numbers, bank account numbers, or credit card numbers (other than a check or credit card authorization form PTO-2038 submitted for payment purposes) is never required by the USPTO to support a petition or an application. If this type of personal information is included in documents submitted to the USPTO, petitioners/applicants should consider redacting such personal information from the documents before submitting them to the USPTO. Petitioner/applicant is advised that the record of a patent application is available to the public after publication of the application (unless a non-publication request in compliance with 37 CFR 1.213(a) is made in the application) or issuance of a patent. Furthermore, the record from an abandoned application may also be available to the public if the application is referenced in a published application or an issued patent (see 37 CFR 1.14). Checks and credit card authorization forms PTO-2038 submitted for payment purposes are not retained in the application file and therefore are not publicly available.

LEGAL NAME OF INVENTOR

Inventor: Michael G. Hoeting Date (Optional): _____

**Signature: _____

** An electronic S-signature is permitted. The S-signature must consist only of letters, or Arabic numerals, or both, with appropriate spaces and commas, periods, apostrophes, or hyphens for punctuation, and the person signing the correspondence must insert his or her own S-signature with a first single forward slash mark before and a second single forward slash mark after the S-signature (*e.g.*, /Dr. James T. Jones, Jr./).

DECLARATION (37 CFR 1.63) FOR UTILITY OR DESIGN APPLICATION USING AN APPLICATION DATA SHEET (37 CFR 1.76)

Title of Invention	SOFT-PROJECTILE LAUNCHING DEVICE

As the below named inventor, I declare that:

This declaration is directed to:

☐ The attached application, or

☒ United States application or PCT international application number 13/761,082 filed on 02/06/2013 .

The above-identified application was made or authorized to be made by me.

I believe that I am the original inventor or an original joint inventor of a claimed invention in the application.

I have reviewed and understand the contents of the above-identified application, including the claims.

I acknowledge the duty to disclose to the United States Patent and Trademark Office all information known to me to be material to patentability as defined in 37 CFR 1.56, including for continuation-in-part applications, material information which became available between the filing date of the prior application and the national or PCT International filing date of the continuation-in-part application.

All statements made herein of my/our own knowledge are true, all statements made herein on information and belief are believed to be true, and further that these statements were made with the knowledge that willful false statements and the like are punishable under 18 U.S.C. 1001 by fine or imprisonment of not more than five (5) years, or both, and may jeopardize the validity of the application or any patent issuing thereon.

WARNING:

Petitioner/applicant is cautioned to avoid submitting personal information in documents filed in a patent application that may contribute to identity theft. Personal information such as social security numbers, bank account numbers, or credit card numbers (other than a check or credit card authorization form PTO-2038 submitted for payment purposes) is never required by the USPTO to support a petition or an application. If this type of personal information is included in documents submitted to the USPTO, petitioners/applicants should consider redacting such personal information from the documents before submitting them to the USPTO. Petitioner/applicant is advised that the record of a patent application is available to the public after publication of the application (unless a non-publication request in compliance with 37 CFR 1.213(a) is made in the application) or issuance of a patent. Furthermore, the record from an abandoned application may also be available to the public if the application is referenced in a published application or an issued patent (see 37 CFR 1.14). Checks and credit card authorization forms PTO-2038 submitted for payment purposes are not retained in the application file and therefore are not publicly available.

LEGAL NAME OF INVENTOR

Inventor: Neil Hamilton Date (Optional): _____

**Signature: _____

** An electronic S-signature is permitted. The S-signature must consist only of letters, or Arabic numerals, or both, with appropriate spaces and commas, periods, apostrophes, or hyphens for punctuation, and the person signing the correspondence must insert his or her own S-signature with a first single forward slash mark before and a second single forward slash mark after the S-signature (*e.g.*, /Dr. James T. Jones, Jr./).

Electronic Patent Application Fee Transmittal

Application Number:	13761082
Filing Date:	06-Feb-2013
Title of Invention:	SOFT-PROJECTILE LAUNCHING DEVICE
First Named Inventor/Applicant Name:	KEITH G. MEGGS
Filer:	Paul Graham Novak/Pia Murphy
Attorney Docket Number:	H6845.1001-B

Filed as Small Entity

Utility under 35 USC 111(a) Filing Fees

Description	Fee Code	Quantity	Amount	Sub-Total in USD($)
Basic Filing:				
Pages:				
Claims:				
Miscellaneous-Filing:				
Late Filing Fee for Oath or Declaration	2051	1	70	70
Petition:				
Patent-Appeals-and-Interference:				
Post-Allowance-and-Post-Issuance:				
Extension-of-Time:				

Description	Fee Code	Quantity	Amount	Sub-Total in USD($)
Miscellaneous:				
			Total in USD ($)	**70**

Electronic Acknowledgement Receipt

EFS ID:	17748909
Application Number:	13761082
International Application Number:	
Confirmation Number:	8512
Title of Invention:	SOFT-PROJECTILE LAUNCHING DEVICE
First Named Inventor/Applicant Name:	KEITH G. MEGGS
Customer Number:	91477
Filer:	Paul Graham Novak/Pia Murphy
Filer Authorized By:	Paul Graham Novak
Attorney Docket Number:	H6845.1001-B
Receipt Date:	23-DEC-2013
Filing Date:	06-FEB-2013
Time Stamp:	18:58:05
Application Type:	Utility under 35 USC 111(a)

Payment information:

Submitted with Payment	yes
Payment Type	Credit Card
Payment was successfully received in RAM	$70
RAM confirmation Number	7086
Deposit Account	
Authorized User	

File Listing:

Document Number	Document Description	File Name	File Size(Bytes)/ Message Digest	Multi Part /.zip	Pages (if apply)

Petitioner Gel-Blaster, Inc. - Ex. 1002 - 0083

1	Oath or Declaration filed	H6845_1001_B_Declarations.pdf	329715 4d788a356dc0b9044dfd0207abd601683b6c1158	no	4
Warnings:					
Information:					
2	Fee Worksheet (SB06)	fee-info.pdf	30499 8e08b056ebf1d7391d3edd11235c09fd3b5e772e	no	2
Warnings:					
Information:					
			Total Files Size (in bytes):	360214	

This Acknowledgement Receipt evidences receipt on the noted date by the USPTO of the indicated documents, characterized by the applicant, and including page counts, where applicable. It serves as evidence of receipt similar to a Post Card, as described in MPEP 503.

<u>New Applications Under 35 U.S.C. 111</u>
If a new application is being filed and the application includes the necessary components for a filing date (see 37 CFR 1.53(b)-(d) and MPEP 506), a Filing Receipt (37 CFR 1.54) will be issued in due course and the date shown on this Acknowledgement Receipt will establish the filing date of the application.

<u>National Stage of an International Application under 35 U.S.C. 371</u>
If a timely submission to enter the national stage of an international application is compliant with the conditions of 35 U.S.C. 371 and other applicable requirements a Form PCT/DO/EO/903 indicating acceptance of the application as a national stage submission under 35 U.S.C. 371 will be issued in addition to the Filing Receipt, in due course.

<u>New International Application Filed with the USPTO as a Receiving Office</u>
If a new international application is being filed and the international application includes the necessary components for an international filing date (see PCT Article 11 and MPEP 1810), a Notification of the International Application Number and of the International Filing Date (Form PCT/RO/105) will be issued in due course, subject to prescriptions concerning national security, and the date shown on this Acknowledgement Receipt will establish the international filing date of the application.

PART B -FEE(S) TRANSMITTAL

Complete and send this form, together with applicable fee(s), to: Mail **Mail Stop ISSUE FEE**
Commissioner for Patents
P.O. Box 1450
Alexandria, Virginia 22313-1450
or Fax (571) 273-2885

INSTRUCTIONS: This form should be used for transmitting the ISSUE FEE and PUBLICATION FEE (if required). Blocks 1 through 5 should be completed where appropriate. All further correspondence including the Patent, advance orders and notification of maintenance fees will be mailed to the current correspondence address as indicated unless corrected below or directed otherwise in Block 1, by (a) specifying a new correspondence address; and/or (b) indicating a separate "FEE ADDRESS" for maintenance fee notifications.

CURRENT CORRESPONDENCE ADDRESS (Note: Use Block 1 for any change of address)

91477
DICKSTEIN SHAPIRO LLP
1633 Broadway
New York, New York 10019

Note: A certificate of mailing can only be used for domestic mailings of the Fee(s) Transmittal. This certificate cannot be used for any other accompanying papers. Each additional paper, such as an assignment or formal drawing, must have its own certificate of mailing or transmission.

Certificate of Mailing or Transmission

I hereby certify that this Fee(s) Transmittal is being deposited with the United States Postal Service with sufficient postage for first class mail in an envelope addressed to the Mail Stop ISSUE FEE address above, or being facsimile transmitted to the USPTO (571) 273-2885, on the date indicated below.

(Depositor's name)
(Signature)
(Date)

APPLICATION NO.	FILING DATE	FIRST NAMED INVENTOR	ATTORNEY DOCKET NO.	CONFIRMATION NO.
13/761,082	02/06/2013	Keith G. Meggs	H6845.1001-B	8512

TITLE OF INVENTION: SOFT-PROJECTILE LAUNCHING DEVICE

APPLN. TYPE	SMALL ENTITY	ISSUE FEE DUE	PUBLICATION FEE DUE	PREV. PAID ISSUE FEE	TOTAL FEE(S) DUE	DATE DUE
nonprovisional	yes	$890.00	$300.00		$1,199.00	12/23/2013

EXAMINER	ART UNIT	CLASS-SUBCLASS
M. D. David	3641	

1. Change of correspondence address or indication of "Fee Address" (37 CFR 1.363).
   - [ ] Change of correspondence address (or Change of Correspondence Address form PTO/SB/122) attached.
   - [ ] "Fee Address" indication (or "Fee Address" Indication form PTO/SB/47; Rev 03-02 or more recent) attached. **Use of a Customer Number is required.**

2. For printing on the patent front page, list
(1) the names of up to 3 registered patent attorneys or agents OR, alternatively,
(2) the name of a single firm (having as a member a registered attorney or agent) and the names of up to 2 registered patent attorneys or agents. If no name is listed, no name will be printed.

1 Dickstein Shapiro LLP
2
3

3. ASSIGNEE NAME AND RESIDENCE DATA TO BE PRINTED ON THE PATENT (print or type)

PLEASE NOTE: Unless an assignee is identified below, no assignee data will appear on the patent. If an assignee is identified below, the document has been filed for recordation as set forth in 37 CFR 3.11. Completion of this form is NOT a substitute for filing an assignment.

(A) NAME OF ASSIGNEE: THE MAYA GROUP, INC.

(B) RESIDENCE: (CITY and STATE OR COUNTRY): TORRANCE, CALIFORNIA

Please check the appropriate assignee category or categories (will not be printed on the patent) : [ ] Individual [x] Corporation or other private group entity [ ] Government

4a. The following fee(s) are submitted:
- [x] Issue Fee
- [x] Publication Fee (No small entity discount permitted)
- [x] Advance Order - # of Copies 3

4b. Payment of Fee(s): **(Please first reapply any previously paid issue fee shown above)**
- [ ] A check is enclosed.
- [x] Payment by credit card.
- [ ] The Director is hereby authorized to charge the required fee(s), any deficiency, or credit any overpayment, to Deposit Account Number 04-1073 (enclose an extra copy of this form).

5. **Change in Entity Status** (from status indicated above)
- [ ] a. Applicant claims SMALL ENTITY status. See 37 CFR 1.27.
- [ ] b. Applicant is no longer claiming SMALL ENTITY status. See 37 CFR 1.27(g)(2).

NOTE: The Issue Fee and Publication Fee (if required) will not be accepted from anyone other than the applicant; a registered attorney or agent; or the assignee or other party in interest as shown by the records of the United States Patent and Trademark Office.

Authorized Signature /Paul G. Novak/ Date December 23, 2013

Typed or printed name Paul G. Novak Registration No. 55,504

Electronic Patent Application Fee Transmittal

Application Number:	13761082
Filing Date:	06-Feb-2013
Title of Invention:	SOFT-PROJECTILE LAUNCHING DEVICE
First Named Inventor/Applicant Name:	KEITH G. MEGGS
Filer:	Paul Graham Novak/Pia Murphy
Attorney Docket Number:	H6845.1001-B

Filed as Small Entity

Utility under 35 USC 111(a) Filing Fees

Description	Fee Code	Quantity	Amount	Sub-Total in USD($)
Basic Filing:				
Pages:				
Claims:				
Miscellaneous-Filing:				
Petition:				
Patent-Appeals-and-Interference:				
Post-Allowance-and-Post-Issuance:				
Utility Appl Issue Fee	2501	1	890	890
Publ. Fee- Early, Voluntary, or Normal	1504	1	300	300

Description	Fee Code	Quantity	Amount	Sub-Total in USD($)
Extension-of-Time:				
Miscellaneous:				
Printed Copy of Patent - No Color	8001	3	3	9
		Total in USD ($)		**1199**

Electronic Acknowledgement Receipt

EFS ID:	17748986
Application Number:	13761082
International Application Number:	
Confirmation Number:	8512
Title of Invention:	SOFT-PROJECTILE LAUNCHING DEVICE
First Named Inventor/Applicant Name:	KEITH G. MEGGS
Customer Number:	91477
Filer:	Paul Graham Novak/Pia Murphy
Filer Authorized By:	Paul Graham Novak
Attorney Docket Number:	H6845.1001-B
Receipt Date:	23-DEC-2013
Filing Date:	06-FEB-2013
Time Stamp:	19:05:16
Application Type:	Utility under 35 USC 111(a)

Payment information:

Submitted with Payment	yes
Payment Type	Credit Card
Payment was successfully received in RAM	$1199
RAM confirmation Number	7149
Deposit Account	
Authorized User	

File Listing:

Document Number	Document Description	File Name	File Size(Bytes)/ Message Digest	Multi Part /.zip	Pages (if appl.)

Petitioner Gel-Blaster, Inc. - Ex. 1002 - 0088

1	Issue Fee Payment (PTO-85B)	H6845_1001-B_-_Issue_Fee_Transmittal.pdf	98672 9395ae9e412f2080d5dd171c3553cfcdf0b9ab96	no	1
Warnings:					
Information:					
2	Fee Worksheet (SB06)	fee-info.pdf	33546 b7a1860f64c7c35edee3d19426f1922f99b518c0	no	2
Warnings:					
Information:					
			Total Files Size (in bytes):	132218	

This Acknowledgement Receipt evidences receipt on the noted date by the USPTO of the indicated documents, characterized by the applicant, and including page counts, where applicable. It serves as evidence of receipt similar to a Post Card, as described in MPEP 503.

New Applications Under 35 U.S.C. 111
If a new application is being filed and the application includes the necessary components for a filing date (see 37 CFR 1.53(b)-(d) and MPEP 506), a Filing Receipt (37 CFR 1.54) will be issued in due course and the date shown on this Acknowledgement Receipt will establish the filing date of the application.

National Stage of an International Application under 35 U.S.C. 371
If a timely submission to enter the national stage of an international application is compliant with the conditions of 35 U.S.C. 371 and other applicable requirements a Form PCT/DO/EO/903 indicating acceptance of the application as a national stage submission under 35 U.S.C. 371 will be issued in addition to the Filing Receipt, in due course.

New International Application Filed with the USPTO as a Receiving Office
If a new international application is being filed and the international application includes the necessary components for an international filing date (see PCT Article 11 and MPEP 1810), a Notification of the International Application Number and of the International Filing Date (Form PCT/RO/105) will be issued in due course, subject to prescriptions concerning national security, and the date shown on this Acknowledgement Receipt will establish the international filing date of the application.

UNITED STATES PATENT AND TRADEMARK OFFICE

UNITED STATES DEPARTMENT OF COMMERCE
United States Patent and Trademark Office
Address: COMMISSIONER FOR PATENTS
P.O. Box 1450
Alexandria, Virginia 22313-1450
www.uspto.gov

APPLICATION NO.	ISSUE DATE	PATENT NO.	ATTORNEY DOCKET NO.	CONFIRMATION NO.
13/761,082	02/04/2014	8640683	H6845.1001-B	8512

91477 7590 01/15/2014
Dickstein Shapiro LLP
1633 Broadway
New York, NY 10019

ISSUE NOTIFICATION

The projected patent number and issue date are specified above.

Determination of Patent Term Adjustment under 35 U.S.C. 154 (b)
(application filed on or after May 29, 2000)

The Patent Term Adjustment is 0 day(s). Any patent to issue from the above-identified application will include an indication of the adjustment on the front page.

If a Continued Prosecution Application (CPA) was filed in the above-identified application, the filing date that determines Patent Term Adjustment is the filing date of the most recent CPA.

Applicant will be able to obtain more detailed information by accessing the Patent Application Information Retrieval (PAIR) WEB site (http://pair.uspto.gov).

Any questions regarding the Patent Term Extension or Adjustment determination should be directed to the Office of Patent Legal Administration at (571)-272-7702. Questions relating to issue and publication fee payments should be directed to the Application Assistance Unit (AAU) of the Office of Data Management (ODM) at (571)-272-4200.

APPLICANT(s) (Please see PAIR WEB site http://pair.uspto.gov for additional applicants):

The Maya Group, Inc., Torrance, CA
KEITH G. MEGGS, Rancho Palos Verdes, CA;
Ronald Brawer, Manhattan Beach, CA;
Michael G. Hoeting, Cincinnati, OH;
Neil Hamilton, Covington, KY;

The United States represents the largest, most dynamic marketplace in the world and is an unparalleled location for business investment, innovation, and commercialization of new technologies. The USA offers tremendous resources and advantages for those who invest and manufacture goods here. Through SelectUSA, our nation works to encourage and facilitate business investment. To learn more about why the USA is the best country in the world to develop technology, manufacture products, and grow your business, visit SelectUSA.gov.

PTO/AIA/82A (07-13)
Approved for use through 11/30/2014. OMB 0651-0051
U.S. Patent and Trademark Office; U.S. DEPARTMENT OF COMMERCE
Under the Paperwork Reduction Act of 1995, no persons are required to respond to a collection of information unless it displays a valid OMB control number.

TRANSMITTAL FOR POWER OF ATTORNEY TO ONE OR MORE REGISTERED PRACTITIONERS

NOTE: This form is to be submitted with the Power of Attorney by Applicant form (PTO/AIA/82B) to identify the application to which the Power of Attorney is directed, in accordance with 37 CFR 1.5, unless the application number and filing date are identified in the Power of Attorney by Applicant form. If neither form PTO/AIA/82A nor form PTO/AIA82B identifies the application to which the Power of Attorney is directed, the Power of Attorney will not be recognized in the application.

Application Number	13/761,082
Filing Date	February 6, 2013
First Named Inventor	KEITH G. MEGGS
Title	SOFT-PROJECTILE LAUNCHING DEVICE
Art Unit	3641
Examiner Name	DAVID, MICHAEL D.
Attorney Docket Number	MAYA-H6845.1001-B

SIGNATURE of Applicant or Patent Practitioner

Signature	/Paul G. Novak/	Date (Optional)	
Name	Paul G. Novak	Registration Number	55,504
Title (if Applicant is a juristic entity)			
Applicant Name (if Applicant is a juristic entity)			

NOTE: This form must be signed in accordance with 37 CFR 1.33. See 37 CFR 1.4(d) for signature requirements and certifications. If more than one applicant, use multiple forms.

☑ *Total of 1 forms are submitted.

This collection of information is required by 37 CFR 1.131, 1.32, and 1.33. The information is required to obtain or retain a benefit by the public which is to file (and by the USPTO to process) an application. Confidentiality is governed by 35 U.S.C. 122 and 37 CFR 1.11 and 1.14. This collection is estimated to take 3 minutes to complete, including gathering, preparing, and submitting the completed application form to the USPTO. Time will vary depending upon the individual case. Any comments on the amount of time you require to complete this form and/or suggestions for reducing this burden, should be sent to the Chief Information Officer, U.S. Patent and Trademark Office, U.S. Department of Commerce, P.O. Box 1450, Alexandria, VA 22313-1450. DO NOT SEND FEES OR COMPLETED FORMS TO THIS ADDRESS. **SEND TO: Commissioner for Patents, P.O. Box 1450, Alexandria, VA 22313-1450.**

If you need assistance in completing the form, call 1-800-PTO-9199 and select option 2.

PTO/AIA/81 (06-12)
Approved for use through 11/30/2014. OMB 0651-0035
U.S. Patent and Trademark Office; U.S. DEPARTMENT OF COMMERCE
Under the Paperwork Reduction Act of 1995, no persons are required to respond to a collection of information unless it displays a valid OMB control number.

POWER OF ATTORNEY TO PROSECUTE APPLICATIONS BEFORE THE USPTO

I hereby revoke all previous powers of attorney given in the application identified in the attached statement under 37 CFR 3.73(c).

I hereby appoint:

[x] Practitioners associated with Customer Number: 137888

OR

[ ] Practitioner(s) named below (if more than ten patent practitioners are to be named, then a customer number must be used):

Name	Registration Number

Name	Registration Number

As attorney(s) or agent(s) to represent the undersigned before the United States Patent and Trademark Office (USPTO) in connection with any and all patent applications assigned only to the undersigned, according to the USPTO assignment records or assignments documents attached to this form in accordance with 37 CFR 3.73(c).

Please change the correspondence address for the application identified in the attached statement under 37 CFR 3.73(c) to:

[x] The address associated with Customer Number: 137888

OR

[ ] Firm or Individual Name

Address

City | State | Zip

Country

Telephone | Email

Assignee Name and Address: THE MAYA GROUP, INC.
10741 Walker Street
Cypress, California 90630

A copy of this form, together with a statement under 37 CFR 3.73(c) (Form PTO/AIA/96 or equivalent) is required to be filed in each application in which this form is used. The statement under 37 CFR 3.73(c) may be completed by one of the practitioners appointed in this form, and must identify the application in which this Power of Attorney is to be filed.

SIGNATURE of Assignee of Record

The individual whose signature and title is supplied below is authorized to act on behalf of the assignee.

Signature	[illegible]	Date	9/20/16
Name	[illegible]	Telephone	
Title	CEO		

This collection of information is required by 37 CFR 1.31, 1.32 and 1.33. The information is required to obtain or retain a benefit by the public which is to file (and by the USPTO to process) an application. Confidentiality is governed by 35 U.S.C. 122 and 37 CFR 1.11 and 1.14. This collection is estimated to take 3 minutes to complete, including gathering, preparing, and submitting the completed application form to the USPTO. Time will vary depending upon the individual case. Any comments on the amount of time you require to complete this form and/or suggestions for reducing this burden, should be sent to the Chief Information Officer, U.S. Patent and Trademark Office, U.S. Department of Commerce, P.O. Box 1450, Alexandria, VA 22313-1450. DO NOT SEND FEES OR COMPLETED FORMS TO THIS ADDRESS. SEND TO: Commissioner for Patents, P.O. Box 1450, Alexandria, VA 22313-1450.

If you need assistance in completing the form, call 1-800-PTO-9199 and select option 2.

Electronic Acknowledgement Receipt

EFS ID:	25914715
Application Number:	13761082
International Application Number:	
Confirmation Number:	8512
Title of Invention:	SOFT-PROJECTILE LAUNCHING DEVICE
First Named Inventor/Applicant Name:	KEITH G. MEGGS
Customer Number:	91477
Filer:	Paul Graham Novak/Pia Murphy
Filer Authorized By:	Paul Graham Novak
Attorney Docket Number:	H6845.1001-B
Receipt Date:	27-MAY-2016
Filing Date:	06-FEB-2013
Time Stamp:	22:17:08
Application Type:	Utility under 35 USC 111(a)

Payment information:

Submitted with Payment	no

File Listing:

Document Number	Document Description	File Name	File Size(Bytes)/ Message Digest	Multi Part /.zip	Pages (if appl.)
1	Assignee showing of ownership per 37 CFR 3.73	MAYA_H6845_1001_B_Statement_under_373c.pdf	75634 bbf2557610f97a1f31e70e6b00b66f0793fda682	no	3

Warnings:

Information:

2	Power of Attorney	MAYA_H6845_Transmittal_for_POA.pdf	101829 d1d01ab54d2cb0383dc9e347afa28acc21c346d4	no	1
Warnings:					
Information:					
3	Power of Attorney	MAYA_H6845_POA1.pdf	1879487 a65607c43e05b073f29e671bc0cac83890d019bb	no	1
Warnings:					
Information:					
			Total Files Size (in bytes):	2056950	

This Acknowledgement Receipt evidences receipt on the noted date by the USPTO of the indicated documents, characterized by the applicant, and including page counts, where applicable. It serves as evidence of receipt similar to a Post Card, as described in MPEP 503.

<u>New Applications Under 35 U.S.C. 111</u>
If a new application is being filed and the application includes the necessary components for a filing date (see 37 CFR 1.53(b)-(d) and MPEP 506), a Filing Receipt (37 CFR 1.54) will be issued in due course and the date shown on this Acknowledgement Receipt will establish the filing date of the application.

<u>National Stage of an International Application under 35 U.S.C. 371</u>
If a timely submission to enter the national stage of an international application is compliant with the conditions of 35 U.S.C. 371 and other applicable requirements a Form PCT/DO/EO/903 indicating acceptance of the application as a national stage submission under 35 U.S.C. 371 will be issued in addition to the Filing Receipt, in due course.

<u>New International Application Filed with the USPTO as a Receiving Office</u>
If a new international application is being filed and the international application includes the necessary components for an international filing date (see PCT Article 11 and MPEP 1810), a Notification of the International Application Number and of the International Filing Date (Form PCT/RO/105) will be issued in due course, subject to prescriptions concerning national security, and the date shown on this Acknowledgement Receipt will establish the international filing date of the application.

PTO/AIA/96 (08-12)
Approved for use through 01/31/2013. OMB 0651-0031
U.S. Patent and Trademark Office; U.S. DEPARTMENT OF COMMERCE
Under the Paperwork Reduction Act of 1995, no persons are required to respond to a collection of information unless it displays a valid OMB control number.

STATEMENT UNDER 37 CFR 3.73(c)

Applicant/Patent Owner: THE MAYA GROUP, INC.

Application No./Patent No.: 8,640,683 Filed/Issue Date: February 4, 2014

Titled: SOFT-PROJECTILE LAUNCHING DEVICE

THE MAYA GROUP, INC., a corporation

(Name of Assignee) (Type of Assignee, e.g., corporation, partnership, university, government agency, etc.)

states that, for the patent application/patent identified above, it is (choose **one** of options 1, 2, 3 or 4 below):

1. ☑ The assignee of the entire right, title, and interest.

2. ☐ An assignee of less than the entire right, title, and interest (check applicable box):

☐ The extent (by percentage) of its ownership interest is _____%. Additional Statement(s) by the owners holding the balance of the interest must be submitted to account for 100% of the ownership interest.

☐ There are unspecified percentages of ownership. The other parties, including inventors, who together own the entire right, title and interest are:

Additional Statement(s) by the owner(s) holding the balance of the interest must be submitted to account for the entire right, title, and interest.

3. ☐ The assignee of an undivided interest in the entirety (a complete assignment from one of the joint inventors was made). The other parties, including inventors, who together own the entire right, title, and interest are:

Additional Statement(s) by the owner(s) holding the balance of the interest must be submitted to account for the entire right, title, and interest.

4. ☐ The recipient, via a court proceeding or the like (*e.g.*, bankruptcy, probate), of an undivided interest in the entirety (a complete transfer of ownership interest was made). The certified document(s) showing the transfer is attached.

The interest identified in option 1, 2 or 3 above (not option 4) is evidenced by either (choose **one** of options A or B below):

A. ☑ An assignment from the inventor(s) of the patent application/patent identified above. The assignment was recorded in the United States Patent and Trademark Office at Reel 032818, Frame 0617, or for which a copy thereof is attached.

B. ☐ A chain of title from the inventor(s), of the patent application/patent identified above, to the current assignee as follows:

1. From: _____ To: _____

The document was recorded in the United States Patent and Trademark Office at

Reel _____, Frame _____, or for which a copy thereof is attached.

2. From: _____ To: _____

The document was recorded in the United States Patent and Trademark Office at

Reel _____, Frame _____, or for which a copy thereof is attached.

This collection of information is required by 37 CFR 3.73(b). The information is required to obtain or retain a benefit by the public which is to file (and by the USPTO to process) an application. Confidentiality is governed by 35 U.S.C. 122 and 37 CFR 1.11 and 1.14. This collection is estimated to take 12 minutes to complete, including gathering, preparing, and submitting the completed application form to the USPTO. Time will vary depending upon the individual case. Any comments on the amount of time you require to complete this form and/or suggestions for reducing this burden, should be sent to the Chief Information Officer, U.S. Patent and Trademark Office, U.S. Department of Commerce, P.O. Box 1450, Alexandria, VA 22313-1450. DO NOT SEND FEES OR COMPLETED FORMS TO THIS ADDRESS. **SEND TO: Commissioner for Patents, P.O. Box 1450, Alexandria, VA 22313-1450.**

If you need assistance in completing the form, call 1-800-PTO-9199 and select option 2.

Under the Paperwork Reduction Act of 1995, no persons are required to respond to a collection of information unless it displays a valid OMB control number.

STATEMENT UNDER 37 CFR 3.73(c)

3. From: _____ To: _____

The document was recorded in the United States Patent and Trademark Office at

Reel _____, Frame _____, or for which a copy thereof is attached.

4. From: _____ To: _____

The document was recorded in the United States Patent and Trademark Office at

Reel _____, Frame _____, or for which a copy thereof is attached.

5. From: _____ To: _____

The document was recorded in the United States Patent and Trademark Office at

Reel _____, Frame _____, or for which a copy thereof is attached.

6. From: _____ To: _____

The document was recorded in the United States Patent and Trademark Office at

Reel _____, Frame _____, or for which a copy thereof is attached.

☐ Additional documents in the chain of title are listed on a supplemental sheet(s).

☑ As required by 37 CFR 3.73(c)(1)(i), the documentary evidence of the chain of title from the original owner to the assignee was, or concurrently is being, submitted for recordation pursuant to 37 CFR 3.11.

[NOTE: A separate copy (i.e., a true copy of the original assignment document(s)) must be submitted to Assignment Division in accordance with 37 CFR Part 3, to record the assignment in the records of the USPTO. See MPEP 302.08]

The undersigned (whose title is supplied below) is authorized to act on behalf of the assignee.

/PAUL G. NOVAK/	May 27, 2016
Signature	Date
PAUL G. NOVAK	55,504
Printed or Typed Name	Title or Registration Number

Privacy Act Statement

The **Privacy Act of 1974 (P.L. 93-579)** requires that you be given certain information in connection with your submission of the attached form related to a patent application or patent. Accordingly, pursuant to the requirements of the Act, please be advised that: (1) the general authority for the collection of this information is 35 U.S.C. 2(b)(2); (2) furnishing of the information solicited is voluntary; and (3) the principal purpose for which the information is used by the U.S. Patent and Trademark Office is to process and/or examine your submission related to a patent application or patent. If you do not furnish the requested information, the U.S. Patent and Trademark Office may not be able to process and/or examine your submission, which may result in termination of proceedings or abandonment of the application or expiration of the patent.

The information provided by you in this form will be subject to the following routine uses:

1. The information on this form will be treated confidentially to the extent allowed under the Freedom of Information Act (5 U.S.C. 552) and the Privacy Act (5 U.S.C 552a). Records from this system of records may be disclosed to the Department of Justice to determine whether disclosure of these records is required by the Freedom of Information Act.
2. A record from this system of records may be disclosed, as a routine use, in the course of presenting evidence to a court, magistrate, or administrative tribunal, including disclosures to opposing counsel in the course of settlement negotiations.
3. A record in this system of records may be disclosed, as a routine use, to a Member of Congress submitting a request involving an individual, to whom the record pertains, when the individual has requested assistance from the Member with respect to the subject matter of the record.
4. A record in this system of records may be disclosed, as a routine use, to a contractor of the Agency having need for the information in order to perform a contract. Recipients of information shall be required to comply with the requirements of the Privacy Act of 1974, as amended, pursuant to 5 U.S.C. 552a(m).
5. A record related to an International Application filed under the Patent Cooperation Treaty in this system of records may be disclosed, as a routine use, to the International Bureau of the World Intellectual Property Organization, pursuant to the Patent Cooperation Treaty.
6. A record in this system of records may be disclosed, as a routine use, to another federal agency for purposes of National Security review (35 U.S.C. 181) and for review pursuant to the Atomic Energy Act (42 U.S.C. 218(c)).
7. A record from this system of records may be disclosed, as a routine use, to the Administrator, General Services, or his/her designee, during an inspection of records conducted by GSA as part of that agency's responsibility to recommend improvements in records management practices and programs, under authority of 44 U.S.C. 2904 and 2906. Such disclosure shall be made in accordance with the GSA regulations governing inspection of records for this purpose, and any other relevant (*i.e.*, GSA or Commerce) directive. Such disclosure shall not be used to make determinations about individuals.
8. A record from this system of records may be disclosed, as a routine use, to the public after either publication of the application pursuant to 35 U.S.C. 122(b) or issuance of a patent pursuant to 35 U.S.C. 151. Further, a record may be disclosed, subject to the limitations of 37 CFR 1.14, as a routine use, to the public if the record was filed in an application which became abandoned or in which the proceedings were terminated and which application is referenced by either a published application, an application open to public inspection or an issued patent.
9. A record from this system of records may be disclosed, as a routine use, to a Federal, State, or local law enforcement agency, if the USPTO becomes aware of a violation or potential violation of law or regulation.

UNITED STATES PATENT AND TRADEMARK OFFICE

UNITED STATES DEPARTMENT OF COMMERCE
United States Patent and Trademark Office
Address: COMMISSIONER FOR PATENTS
P.O. Box 1450
Alexandria, Virginia 22313-1450
www.uspto.gov

APPLICATION NUMBER	FILING OR 371(C) DATE	FIRST NAMED APPLICANT	ATTY. DOCKET NO./TITLE
13/761,082	02/06/2013	KEITH G. MEGGS	H6845.1001-B

CONFIRMATION NO. 8512

POWER OF ATTORNEY NOTICE

91477
Blank Rome LLP
1825 Eye Street NW
Washington, DC 20006

OC000000083373894

Date Mailed: 06/03/2016

NOTICE REGARDING CHANGE OF POWER OF ATTORNEY

This is in response to the Power of Attorney filed 05/27/2016.

- The Power of Attorney to you in this application has been revoked by the assignee who has intervened as provided by 37 CFR 3.71. Future correspondence will be mailed to the new address of record(37 CFR 1.33).

Questions about the contents of this notice and the requirements it sets forth should be directed to the Office of Data Management, Application Assistance Unit, at **(571) 272-4000** or **(571) 272-4200** or **1-888-786-0101**.

/dtvernon/

UNITED STATES PATENT AND TRADEMARK OFFICE

UNITED STATES DEPARTMENT OF COMMERCE
United States Patent and Trademark Office
Address: COMMISSIONER FOR PATENTS
P.O. Box 1450
Alexandria, Virginia 22313-1450
www.uspto.gov

APPLICATION NUMBER	FILING OR 371(C) DATE	FIRST NAMED APPLICANT	ATTY. DOCKET NO./TITLE
13/761,082	02/06/2013	KEITH G. MEGGS	MAYA-H68445.1001-B

CONFIRMATION NO. 8512

POA ACCEPTANCE LETTER

137888
Hackler Daghighian & Martino
433 North Camden Drive
Fourth Floor
Beverly Hills, CA 90210

OC000000083374055

Date Mailed: 06/03/2016

NOTICE OF ACCEPTANCE OF POWER OF ATTORNEY

This is in response to the Power of Attorney filed 05/27/2016.

The Power of Attorney in this application is accepted. Correspondence in this application will be mailed to the above address as provided by 37 CFR 1.33.

Questions about the contents of this notice and the requirements it sets forth should be directed to the Office of Data Management, Application Assistance Unit, at **(571) 272-4000** or **(571) 272-4200** or **1-888-786-0101**.

/dtvernon/

PTO/SB/81A (12-08)
Approved for use through 03/31/2021. OMB 0651-0035
U.S. Patent and Trademark Office; U.S. DEPARTMENT OF COMMERCE
Under the Paperwork Reduction Act of 1995 no persons are required to respond to a collection of information unless it displays a valid OMB control number

PATENT - POWER OF ATTORNEY OR REVOCATION OF POWER OF ATTORNEY WITH A NEW POWER OF ATTORNEY AND CHANGE OF CORRESPONDENCE ADDRESS

Patent Number	8640683
Issue Date	Feb 4, 2014
First Named Inventor	Keith G. Meggs
Title	SOFT-PROJECTILE LAUNCHING DEVICE
Attorney Docket No.	SMI-242

I hereby revoke all previous powers of attorney given in the above-identified patent.

☐ A Power of Attorney is submitted herewith.

OR

☒ I hereby appoint Practitioner(s) associated with the Customer Number identified in the box at right as my/our attorney(s) or agent(s) with respect to the patent identified above, and to transact all business in the United States Patent and Trademark Office connected therewith:

103843

OR

☐ I hereby appoint Practitioner(s) named below as my/our attorney(s) or agent(s) with respect to the patent identified above, and to transact all business in the United States Patent and Trademark Office connected therewith:

Practitioner(s) Name	Registration Number

Please recognize or change the correspondence address for the above-identified patent to:

☒ The address associated with the above-identified Customer Number.

OR

☐ The address associated with the Customer Number identified in the box at right:

OR

☐ Firm or Individual Name					
Address					
City		State		Zip	
Country					
Telephone		Email			

I am the:

☐ Inventor, having ownership of the patent.

OR

☒ Patent owner.

Statement under 37 CFR 3.73(b) (Form PTO/SB/96) submitted herewith or filed on _____.

SIGNATURE of Inventor or Patent Owner

Signature	/Christopher Harrs/	Date	
Name	Chris Harrs	Telephone	
Title and Company	Secretary, SPIN MASTER, INC.		

NOTE: Signatures of all the inventors or patent owners of the entire interest or their representative(s) are required. If more than one signature is required, submit multiple forms, check the box below, and identify the total number of forms submitted in the blank below.

☐ A total of _____ forms are submitted.

This collection of information is required by 37 CFR 1.31, 1.32, and 1.33. The information is required to obtain or retain a benefit by the public, which is to update (and by the USPTO to process) the file of a patent or reexamination proceeding. Confidentiality is governed by 35 U.S.C. 122 and 37 CFR 1.14. This collection is estimated to take 15 minutes to complete, including gathering, preparing, and submitting the completed application form to the USPTO. Time will vary depending upon the individual case. Any comments on the amount of time you require to complete this form and/or suggestions for reducing this burden, should be sent to the Chief Information Officer, U.S. Patent and Trademark Office, U.S. Department of Commerce, P.O. Box 1450, Alexandria, VA 22313-1450. DO NOT SEND FEES OR COMPLETED FORMS TO THIS ADDRESS. **SEND TO: Commissioner for Patents, P.O. Box 1450, Alexandria, VA 22313-1450.**

If you need assistance in completing the form, call 1-800-PTO-9199 and select option 2.

Privacy Act Statement

The **Privacy Act of 1974 (P.L. 93-579)** requires that you be given certain information in connection with your submission of the attached form related to a patent application or patent. Accordingly, pursuant to the requirements of the Act, please be advised that: (1) the general authority for the collection of this information is 35 U.S.C. 2(b)(2); (2) furnishing of the information solicited is voluntary; and (3) the principal purpose for which the information is used by the U.S. Patent and Trademark Office is to process and/or examine your submission related to a patent application or patent. If you do not furnish the requested information, the U.S. Patent and Trademark Office may not be able to process and/or examine your submission, which may result in termination of proceedings or abandonment of the application or expiration of the patent.

The information provided by you in this form will be subject to the following routine uses:

1. The information on this form will be treated confidentially to the extent allowed under the Freedom of Information Act (5 U.S.C. 552) and the Privacy Act (5 U.S.C 552a). Records from this system of records may be disclosed to the Department of Justice to determine whether disclosure of these records is required by the Freedom of Information Act.
2. A record from this system of records may be disclosed, as a routine use, in the course of presenting evidence to a court, magistrate, or administrative tribunal, including disclosures to opposing counsel in the course of settlement negotiations.
3. A record in this system of records may be disclosed, as a routine use, to a Member of Congress submitting a request involving an individual, to whom the record pertains, when the individual has requested assistance from the Member with respect to the subject matter of the record.
4. A record in this system of records may be disclosed, as a routine use, to a contractor of the Agency having need for the information in order to perform a contract. Recipients of information shall be required to comply with the requirements of the Privacy Act of 1974, as amended, pursuant to 5 U.S.C. 552a(m).
5. A record related to an International Application filed under the Patent Cooperation Treaty in this system of records may be disclosed, as a routine use, to the International Bureau of the World Intellectual Property Organization, pursuant to the Patent Cooperation Treaty.
6. A record in this system of records may be disclosed, as a routine use, to another federal agency for purposes of National Security review (35 U.S.C. 181) and for review pursuant to the Atomic Energy Act (42 U.S.C. 218(c)).
7. A record from this system of records may be disclosed, as a routine use, to the Administrator, General Services, or his/her designee, during an inspection of records conducted by GSA as part of that agency's responsibility to recommend improvements in records management practices and programs, under authority of 44 U.S.C. 2904 and 2906. Such disclosure shall be made in accordance with the GSA regulations governing inspection of records for this purpose, and any other relevant (*i.e.*, GSA or Commerce) directive. Such disclosure shall not be used to make determinations about individuals.
8. A record from this system of records may be disclosed, as a routine use, to the public after either publication of the application pursuant to 35 U.S.C. 122(b) or issuance of a patent pursuant to 35 U.S.C. 151. Further, a record may be disclosed, subject to the limitations of 37 CFR 1.14, as a routine use, to the public if the record was filed in an application which became abandoned or in which the proceedings were terminated and which application is referenced by either a published application, an application open to public inspection or an issued patent.
9. A record from this system of records may be disclosed, as a routine use, to a Federal, State, or local law enforcement agency, if the USPTO becomes aware of a violation or potential violation of law or regulation.

PTO/AIA/96 (08-12)
Approved for use through 01/31/2013. OMB 0651-0031
U.S. Patent and Trademark Office; U.S. DEPARTMENT OF COMMERCE
Under the Paperwork Reduction Act of 1995, no persons are required to respond to a collection of information unless it displays a valid OMB control number.

STATEMENT UNDER 37 CFR 3.73(c)

Applicant/Patent Owner: SPIN MASTER, INC.

Application No./Patent No.: 8640683 Filed/Issue Date: Feb 4, 2014

Titled: SOFT-PROJECTILE LAUNCHING DEVICE

SPIN MASTER, INC., a corporation

(Name of Assignee) (Type of Assignee, e.g., corporation, partnership, university, government agency, etc.)

states that, for the patent application/patent identified above, it is (choose **one** of options 1, 2, 3 or 4 below):

1. ☑ The assignee of the entire right, title, and interest.

2. ☐ An assignee of less than the entire right, title, and interest (check applicable box):

☐ The extent (by percentage) of its ownership interest is _____%. Additional Statement(s) by the owners holding the balance of the interest must be submitted to account for 100% of the ownership interest.

☐ There are unspecified percentages of ownership. The other parties, including inventors, who together own the entire right, title and interest are:

Additional Statement(s) by the owner(s) holding the balance of the interest must be submitted to account for the entire right, title, and interest.

3. ☐ The assignee of an undivided interest in the entirety (a complete assignment from one of the joint inventors was made). The other parties, including inventors, who together own the entire right, title, and interest are:

Additional Statement(s) by the owner(s) holding the balance of the interest must be submitted to account for the entire right, title, and interest.

4. ☐ The recipient, via a court proceeding or the like (*e.g.*, bankruptcy, probate), of an undivided interest in the entirety (a complete transfer of ownership interest was made). The certified document(s) showing the transfer is attached.

The interest identified in option 1, 2 or 3 above (not option 4) is evidenced by either (choose **one** of options A or B below):

A. ☐ An assignment from the inventor(s) of the patent application/patent identified above. The assignment was recorded in the United States Patent and Trademark Office at Reel _____, Frame _____, or for which a copy thereof is attached.

B. ☑ A chain of title from the inventor(s), of the patent application/patent identified above, to the current assignee as follows:

1. From: BRAWER, RONALD To: HOBBEEZONE, INC.

The document was recorded in the United States Patent and Trademark Office at Reel 026239, Frame 0942, or for which a copy thereof is attached.

2. From: HAMILTON, NEIL R. To: HOBBEEZONE, INC.

The document was recorded in the United States Patent and Trademark Office at Reel 025534, Frame 0295, or for which a copy thereof is attached.

This collection of information is required by 37 CFR 3.73(b). The information is required to obtain or retain a benefit by the public which is to file (and by the USPTO to process) an application. Confidentiality is governed by 35 U.S.C. 122 and 37 CFR 1.11 and 1.14. This collection is estimated to take 12 minutes to complete, including gathering, preparing, and submitting the completed application form to the USPTO. Time will vary depending upon the individual case. Any comments on the amount of time you require to complete this form and/or suggestions for reducing this burden, should be sent to the Chief Information Officer, U.S. Patent and Trademark Office, U.S. Department of Commerce, P.O. Box 1450, Alexandria, VA 22313-1450. DO NOT SEND FEES OR COMPLETED FORMS TO THIS ADDRESS. **SEND TO: Commissioner for Patents, P.O. Box 1450, Alexandria, VA 22313-1450.**

If you need assistance in completing the form, call 1-800-PTO-9199 and select option 2.

Under the Paperwork Reduction Act of 1995, no persons are required to respond to a collection of information unless it displays a valid OMB control number.

STATEMENT UNDER 37 CFR 3.73(c)

3. From: HOETING, MICHAEL G. To: HOBBEEZONE, INC.

The document was recorded in the United States Patent and Trademark Office at
Reel 025541, Frame 0606, or for which a copy thereof is attached.

4. From: MEGGS, KEITH G. To: HOBBEEZONE, INC.

The document was recorded in the United States Patent and Trademark Office at
Reel 026239, Frame 0939, or for which a copy thereof is attached.

5. From: HOBBEEZONE, INC. To: THE MAYA GROUP, INC.

The document was recorded in the United States Patent and Trademark Office at
Reel 029120, Frame 0721, or for which a copy thereof is attached.

6. From: MAYA GROUP, INC., THE To: EAST WEST BANK

The document was recorded in the United States Patent and Trademark Office at
Reel 032818, Frame 0617, or for which a copy thereof is attached.

☑ Additional documents in the chain of title are listed on a supplemental sheet(s).

☐ As required by 37 CFR 3.73(c)(1)(i), the documentary evidence of the chain of title from the original owner to the assignee was, or concurrently is being, submitted for recordation pursuant to 37 CFR 3.11.

[NOTE: A separate copy (i.e., a true copy of the original assignment document(s)) must be submitted to Assignment Division in accordance with 37 CFR Part 3, to record the assignment in the records of the USPTO. See MPEP 302.08]

The undersigned (whose title is supplied below) is authorized to act on behalf of the assignee.

/BERND AXEL NIX/	2021-07-20
Signature	Date
Bernd Axel Nix	59184
Printed or Typed Name	Title or Registration Number

STATEMENT UNDER 37 CFR 3.73(c) – SUPPLEMENTAL SHEET

7. From: THE MAYA GROUP, INC. To: EAST WEST BANK

The document was recorded in the United States Patent and Trademark Office at Reel 040045, Frame 0232, or for which a copy thereof is attached.

8. From: EAST WEST BANK To: THE MAYA GROUP, INC.

The document was recorded in the United States Patent and Trademark Office at Reel 046816, Frame 0605, or for which a copy thereof is attached.

9. From: EAST WEST BANK To: THE MAYA GROUP, INC.

The document was recorded in the United States Patent and Trademark Office at Reel 046816, Frame 0422, or for which a copy thereof is attached.

8. From: THE MAYA GROUP, INC. To: SPIN MASTER, INC.

The document was recorded in the United States Patent and Trademark Office at Reel 051983, Frame 0201, or for which a copy thereof is attached.

8. From: THE MAYA GROUP, INC. To: SPIN MASTER, INC.

The document was recorded in the United States Patent and Trademark Office at Reel 052070, Frame 0534, or for which a copy thereof is attached.

As required by 37 CFR 3.73(c)(1)(i), the documentary evidence of the chain of title from the original owner to the assignee was, or concurrently is being, submitted for recordation pursuant to 37 CFR 3.11.

[NOTE: A separate copy (i.e., a true copy of the original assignment document(s)) must be submitted to Assignment Division in accordance with 37 CFR Part 3, to record the assignment in the records of the USPTO. See MPEP 302.08]

The undersigned (whose title is supplied below) is authorized to act on behalf of the assignee.

/BERND AXEL NIX/	2021-07-20
Signature	Date
Bernd Axel Nix	59184
Printed or Typed Name	Title or Registration Number

Electronic Acknowledgement Receipt

EFS ID:	43301331
Application Number:	13761082
International Application Number:	
Confirmation Number:	8512
Title of Invention:	SOFT-PROJECTILE LAUNCHING DEVICE
First Named Inventor/Applicant Name:	KEITH G. MEGGS
Customer Number:	137888
Filer:	Bernd Axel Nix
Filer Authorized By:	
Attorney Docket Number:	MAYA1001bDIV
Receipt Date:	20-JUL-2021
Filing Date:	06-FEB-2013
Time Stamp:	18:19:54
Application Type:	Utility under 35 USC 111(a)

Payment information:

Submitted with Payment	no

File Listing:

Document Number	Document Description	File Name	File Size(Bytes)/ Message Digest	Multi Part /.zip	Pages (if appl.)
1	Power of Attorney	SMI-242_POA_.pdf	509640 1974a3f5752d6da037c341003039f01691cd1d79	no	2

Warnings:

Information:					
2	Assignee showing of ownership per 37 CFR 3.73	SMI-242_373_Form.pdf	141455 81de4c7ecf4b77634a9b71c0be08478b2f9b4485	no	3
Warnings:					
Information:					
			Total Files Size (in bytes):	651095	

This Acknowledgement Receipt evidences receipt on the noted date by the USPTO of the indicated documents, characterized by the applicant, and including page counts, where applicable. It serves as evidence of receipt similar to a Post Card, as described in MPEP 503.

New Applications Under 35 U.S.C. 111
If a new application is being filed and the application includes the necessary components for a filing date (see 37 CFR 1.53(b)-(d) and MPEP 506), a Filing Receipt (37 CFR 1.54) will be issued in due course and the date shown on this Acknowledgement Receipt will establish the filing date of the application.
National Stage of an International Application under 35 U.S.C. 371
If a timely submission to enter the national stage of an international application is compliant with the conditions of 35 U.S.C. 371 and other applicable requirements a Form PCT/DO/EO/903 indicating acceptance of the application as a national stage submission under 35 U.S.C. 371 will be issued in addition to the Filing Receipt, in due course.
New International Application Filed with the USPTO as a Receiving Office
If a new international application is being filed and the international application includes the necessary components for an international filing date (see PCT Article 11 and MPEP 1810), a Notification of the International Application Number and of the International Filing Date (Form PCT/RO/105) will be issued in due course, subject to prescriptions concerning national security, and the date shown on this Acknowledgement Receipt will establish the international filing date of the application.

UNITED STATES PATENT AND TRADEMARK OFFICE

UNITED STATES DEPARTMENT OF COMMERCE
United States Patent and Trademark Office
Address: COMMISSIONER FOR PATENTS
P.O. Box 1450
Alexandria, Virginia 22313-1450
www.uspto.gov

APPLICATION NUMBER	FILING OR 371(C) DATE	FIRST NAMED APPLICANT	ATTY. DOCKET NO./TITLE
13/761,082	02/06/2013	KEITH G. MEGGS	SMI-242

CONFIRMATION NO. 8512

POA ACCEPTANCE LETTER

OC000000127136265

103843
MILLMAN IP Inc.
401 Bay St., Suite 2108
Box 60
Toronto, ON M5H 2Y4
CANADA

Date Mailed: 07/22/2021

NOTICE OF ACCEPTANCE OF POWER OF ATTORNEY

This is in response to the Power of Attorney filed 07/20/2021.

The Power of Attorney in this application is accepted. Correspondence in this application will be mailed to the above address as provided by 37 CFR 1.33.

Questions about the contents of this notice and the requirements it sets forth should be directed to the Office of Data Management, Application Assistance Unit, at **(571) 272-4000** or **(571) 272-4200** or **1-888-786-0101**.

/nrhayden/

UNITED STATES PATENT AND TRADEMARK OFFICE

UNITED STATES DEPARTMENT OF COMMERCE
United States Patent and Trademark Office
Address: COMMISSIONER FOR PATENTS
P.O. Box 1450
Alexandria, Virginia 22313-1450
www.uspto.gov

APPLICATION NUMBER	FILING OR 371(C) DATE	FIRST NAMED APPLICANT	ATTY. DOCKET NO./TITLE
13/761,082	02/06/2013	KEITH G. MEGGS	MAYA1001bDIV

CONFIRMATION NO. 8512

POWER OF ATTORNEY NOTICE

137888
HACKLER DAGHIGHIAN MARTINO & NOVAK
10900 WILSHIRE BLVD.
SUITE 300
LOS ANGELES, CA 90024

OC000000127136240

Date Mailed: 07/22/2021

NOTICE REGARDING CHANGE OF POWER OF ATTORNEY

This is in response to the Power of Attorney filed 07/20/2021.

- The Power of Attorney to you in this application has been revoked by the assignee who has intervened as provided by 37 CFR 3.71. Future correspondence will be mailed to the new address of record(37 CFR 1.33).

Questions about the contents of this notice and the requirements it sets forth should be directed to the Office of Data Management, Application Assistance Unit, at **(571) 272-4000** or **(571) 272-4200** or **1-888-786-0101**.

/nrhayden/

UNITED STATES PATENT AND TRADEMARK OFFICE

UNITED STATES DEPARTMENT OF COMMERCE
United States Patent and Trademark Office
Address: COMMISSIONER FOR PATENTS
P.O. Box 1450
Alexandria, Virginia 22313-1450
www.uspto.gov

APPLICATION NUMBER	FILING OR 371(C) DATE	FIRST NAMED APPLICANT	ATTY.DOCKET NO./TITLE	REQUEST ID
13/761,082	02/06/2013	KEITH G. MEGGS	SMI-242	144155

Acknowledgement of Loss of Entitlement to Entity Status Discount

The entity status change request below filed through Private PAIR on 07/22/2021 has been accepted.

CERTIFICATIONS:

Change of Entity Status:

X Applicant changing to regular undiscounted fee status.
NOTE: Checking this box will be taken to be notification of loss of entitlement to small or micro entity status, as applicable.

This portion must be completed by the signatory or signatories making the entity status change in accordance with 37 CFR 1.4(d)(4).

Signature:	/JAY M. MILLMAN/
Name:	Jay M. Millman
Registration Number:	52520