US 20060180134A1

(19) United States

(12) Patent Application Publication

(10) Pub. No.: US 2006/0180134 A1

(43) Pub. Date: Aug. 17, 2006

Illuzzi

(54) COMBINATION SOLID PROJECTILE AND PAINTBALL GUN, AND SOLID PROJECTILE ADAPTER FOR PAINTBALL GUN

(76) Inventor: **Louis M. Illuzzi**, Manalapan, NJ (US)

Correspondence Address:
LOUIS M. ILLUZZI
4 CARLISLE COURT
MANALAPAN, NJ 07726 (US)

(21) Appl. No.: **11/056,826**

(22) Filed: **Feb. 11, 2005**

Publication Classification

(51) **Int. Cl.**
F41B 11/00 (2006.01)
F41F 1/00 (2006.01)

(52) **U.S. Cl.** **124/74**; 124/41.1; 102/502

(57) **ABSTRACT**

A combination solid projectile and paintball gun includes a main housing, a trigger, a barrel, a first projectile port, means for opening and closing the port, and an adapter for attachment to the gun between the bore and the barrel for feeding and firing solid projectiles through a second projectile port. There is a compressed gas line from the main housing to a connection mechanism for connection to a compressed gas source. A valve is located on the line and has a closed position and open position, with biasing means for biasing the valve in its closed position. There is a bore and piston in the main housing downstream from the valve for trigger activation and firing either paintballs from the first port, or liquid-free projectiles of varied shapes from the second port and adapter. In another embodiment, a solid projectile adapter connects to the paintball feeding port in place of the paintball hopper.

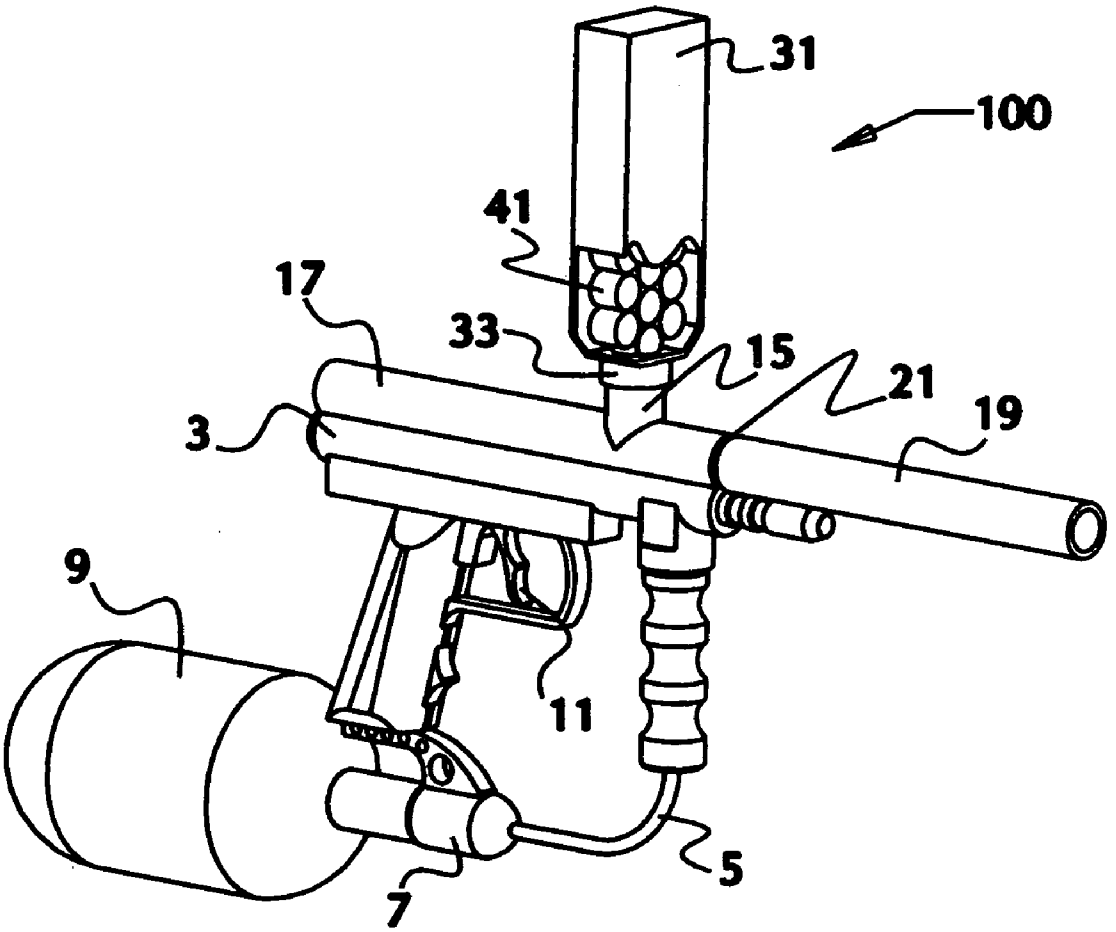

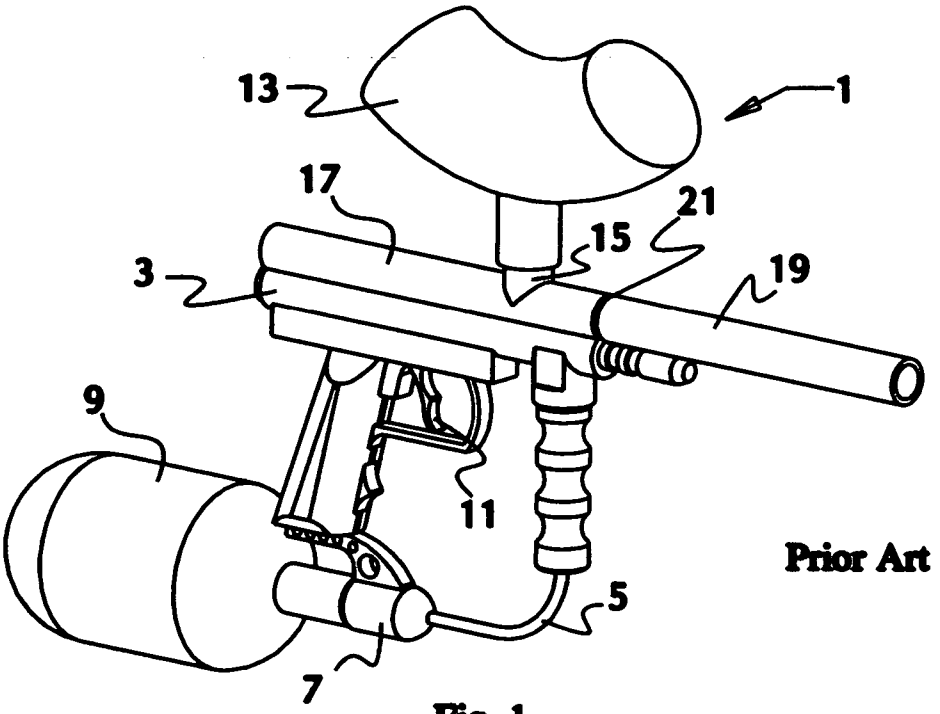

Fig. 1

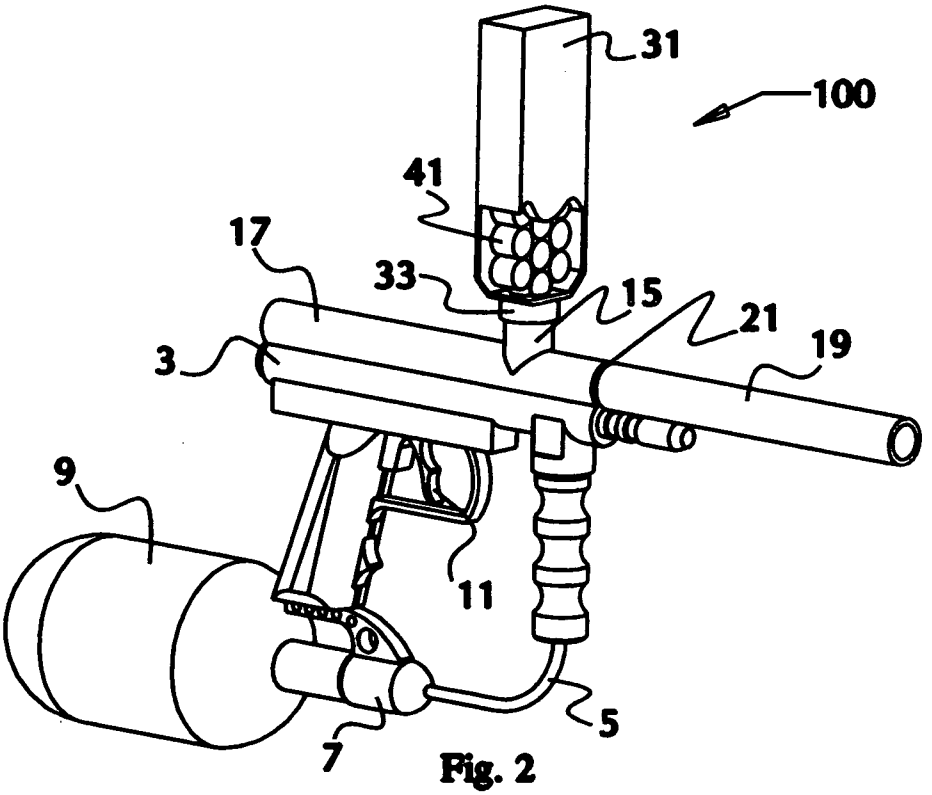

Fig. 2

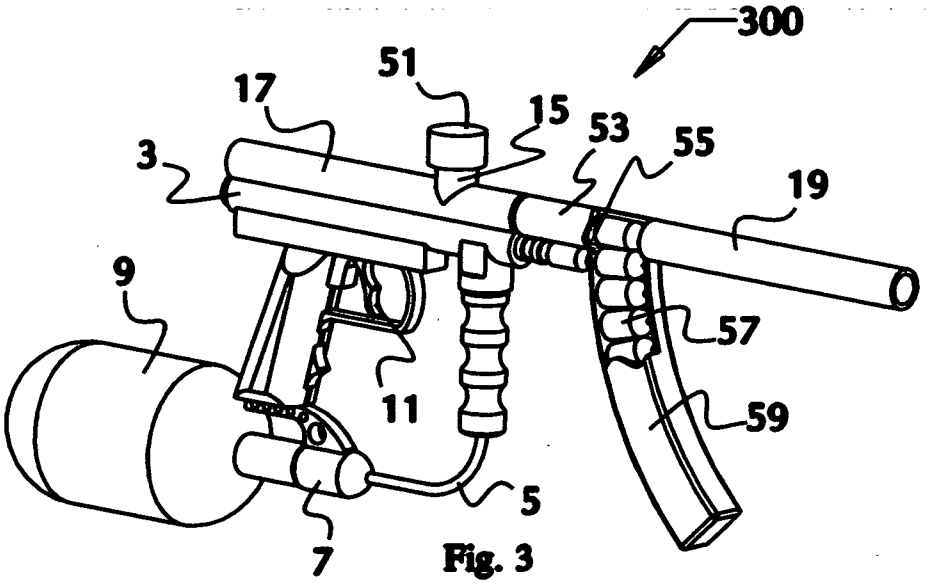
300
51
17
15
53
55
3
19
9
57
11
59
5
7

Fig. 3

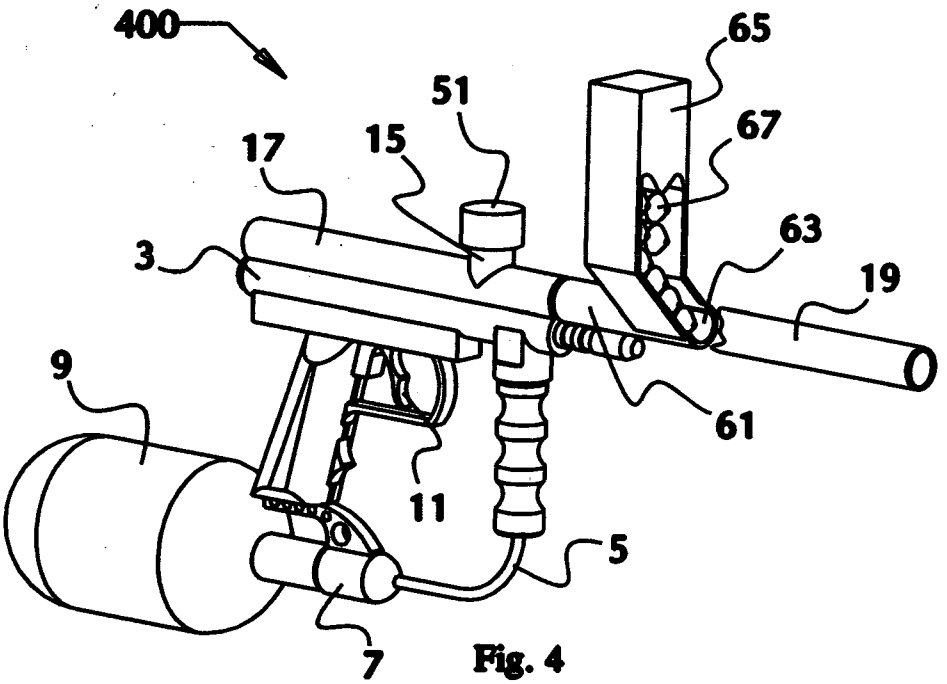
400
65
51
67
17
15
63
3
19
9
61
11
5
7

Fig. 4

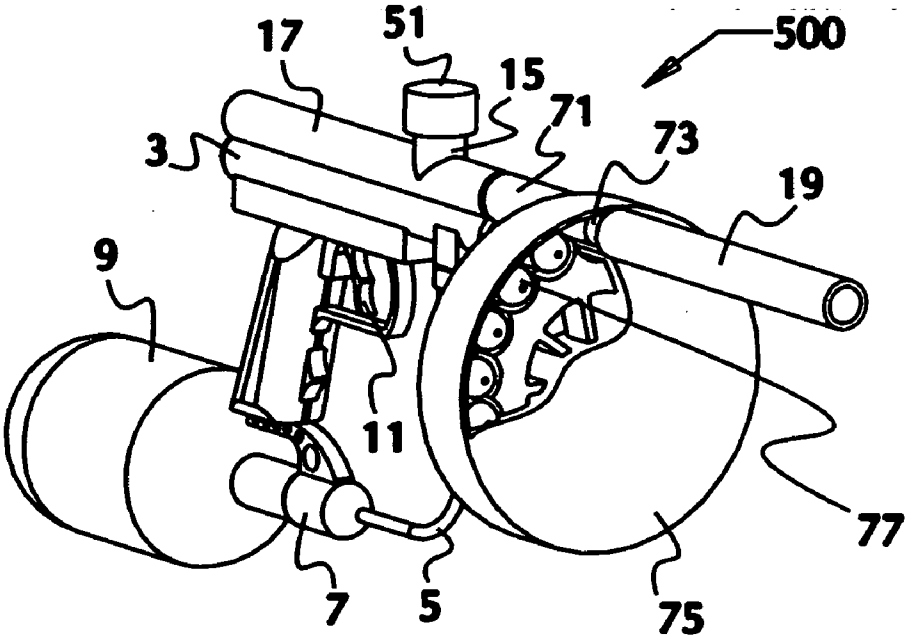
500
17
51
15
71
73
3
19
9
11
77
7
5
75

Fig. 5

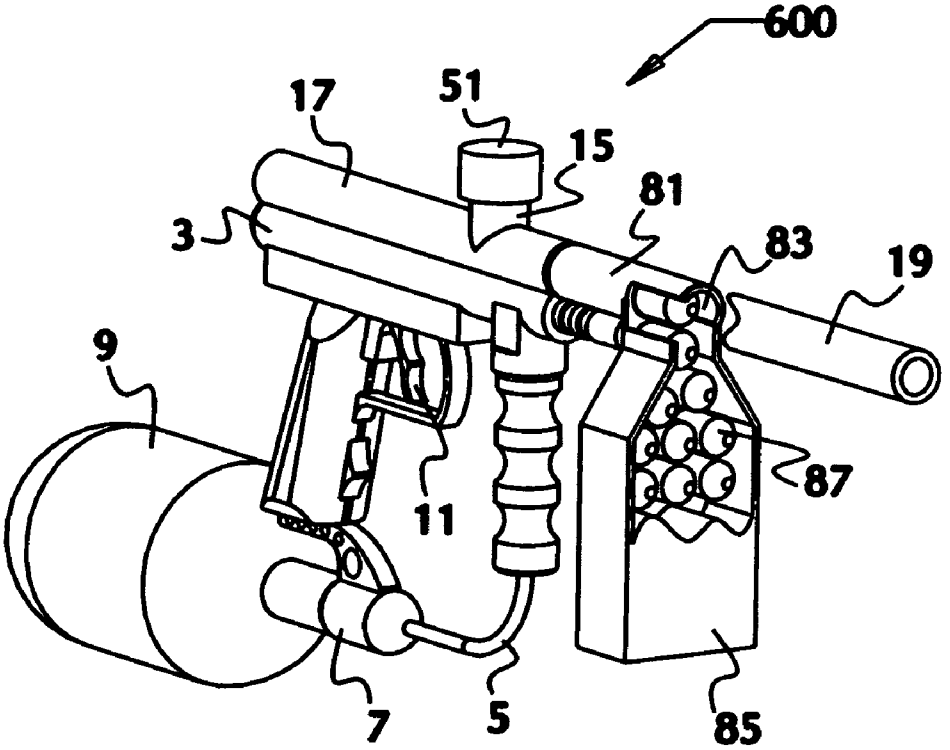
600
17
51
15
81
3
83
19
9
87
11
7
5
85

Fig. 6

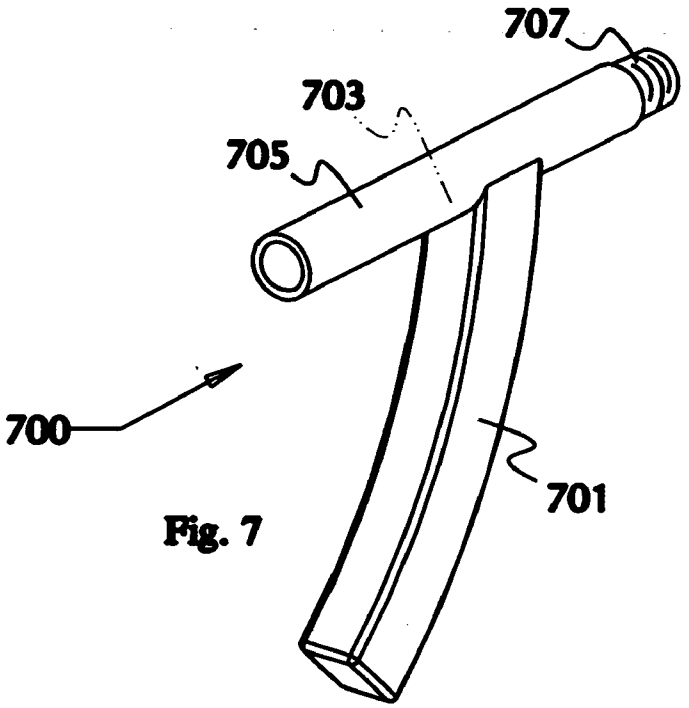

Fig. 7

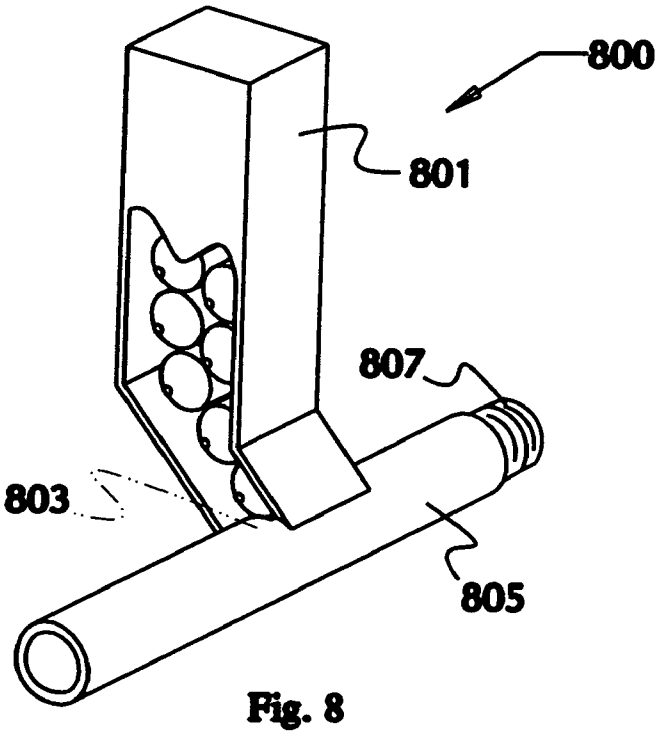

Fig. 8

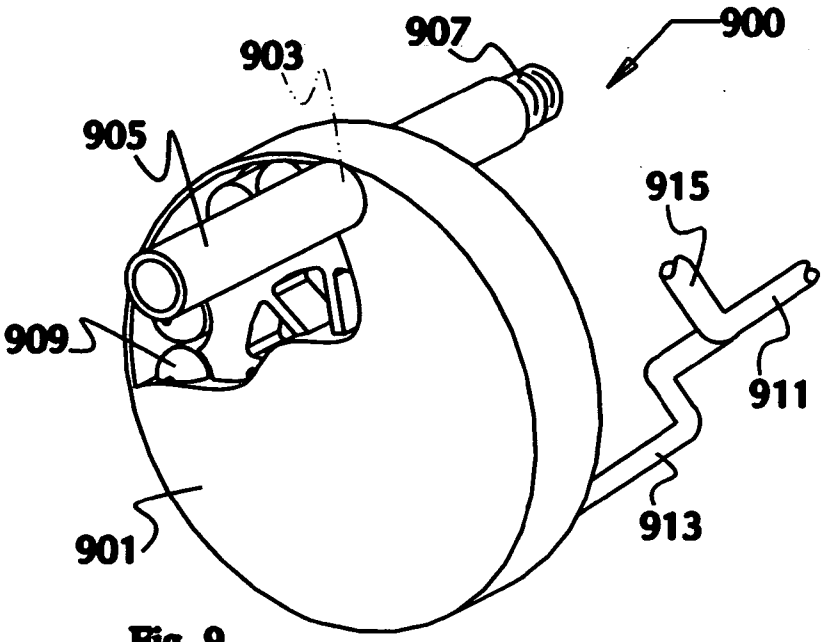

Fig. 9

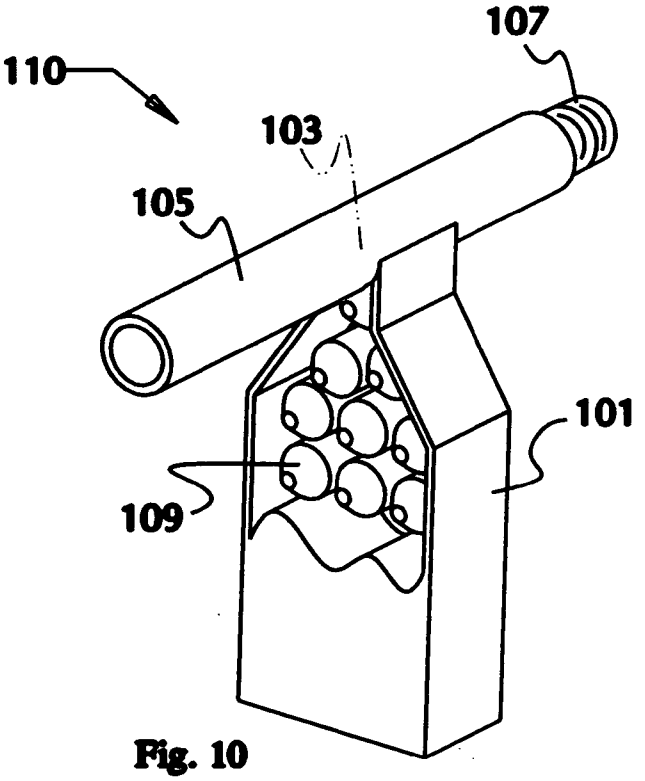

Fig. 10

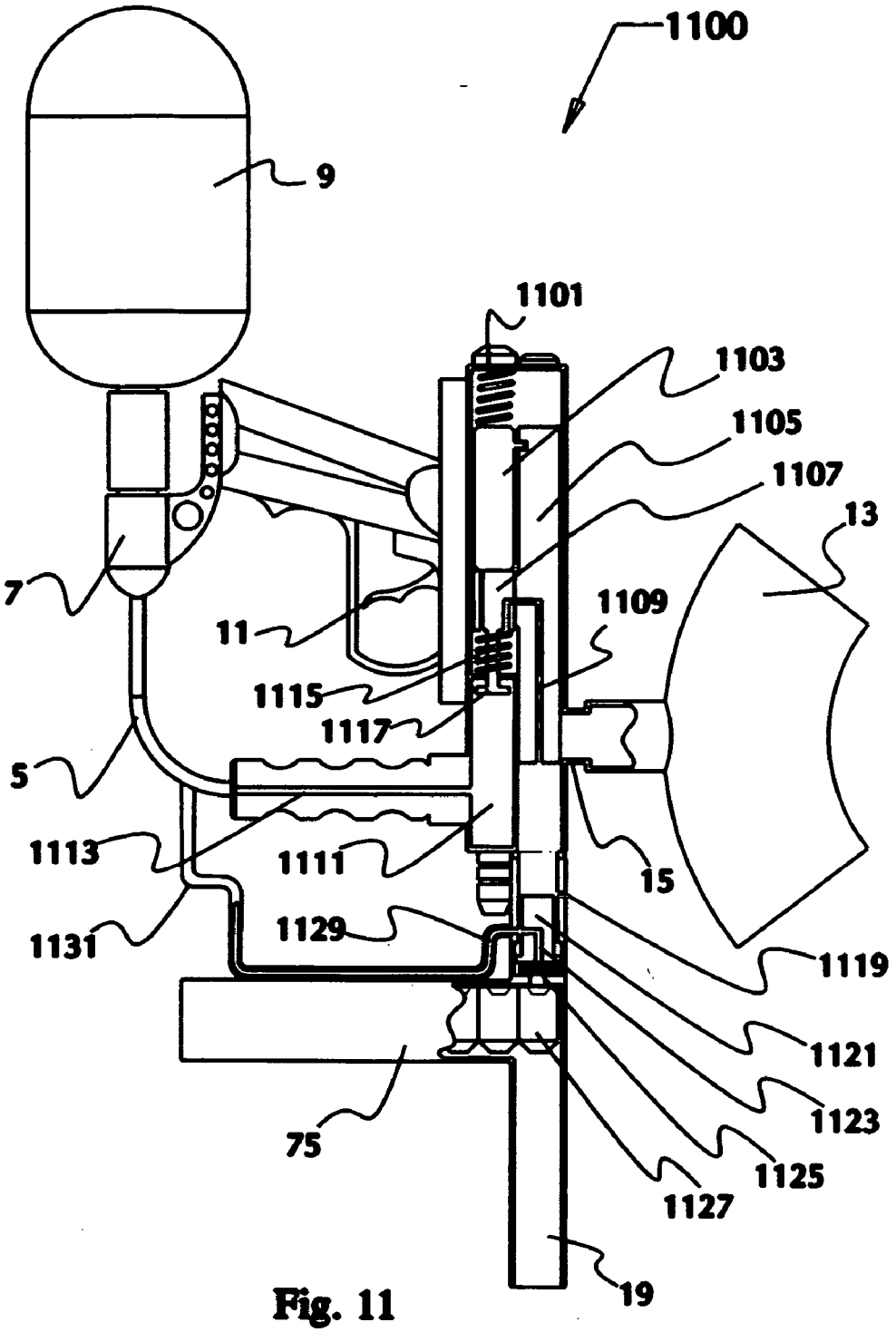
1100
9
1101
1103
1105
1107
13
7
11
1109
1115
1117
5
1113
1111
15
1131
1129
1119
1121
1123
75
1125
1127
19

Fig. 11

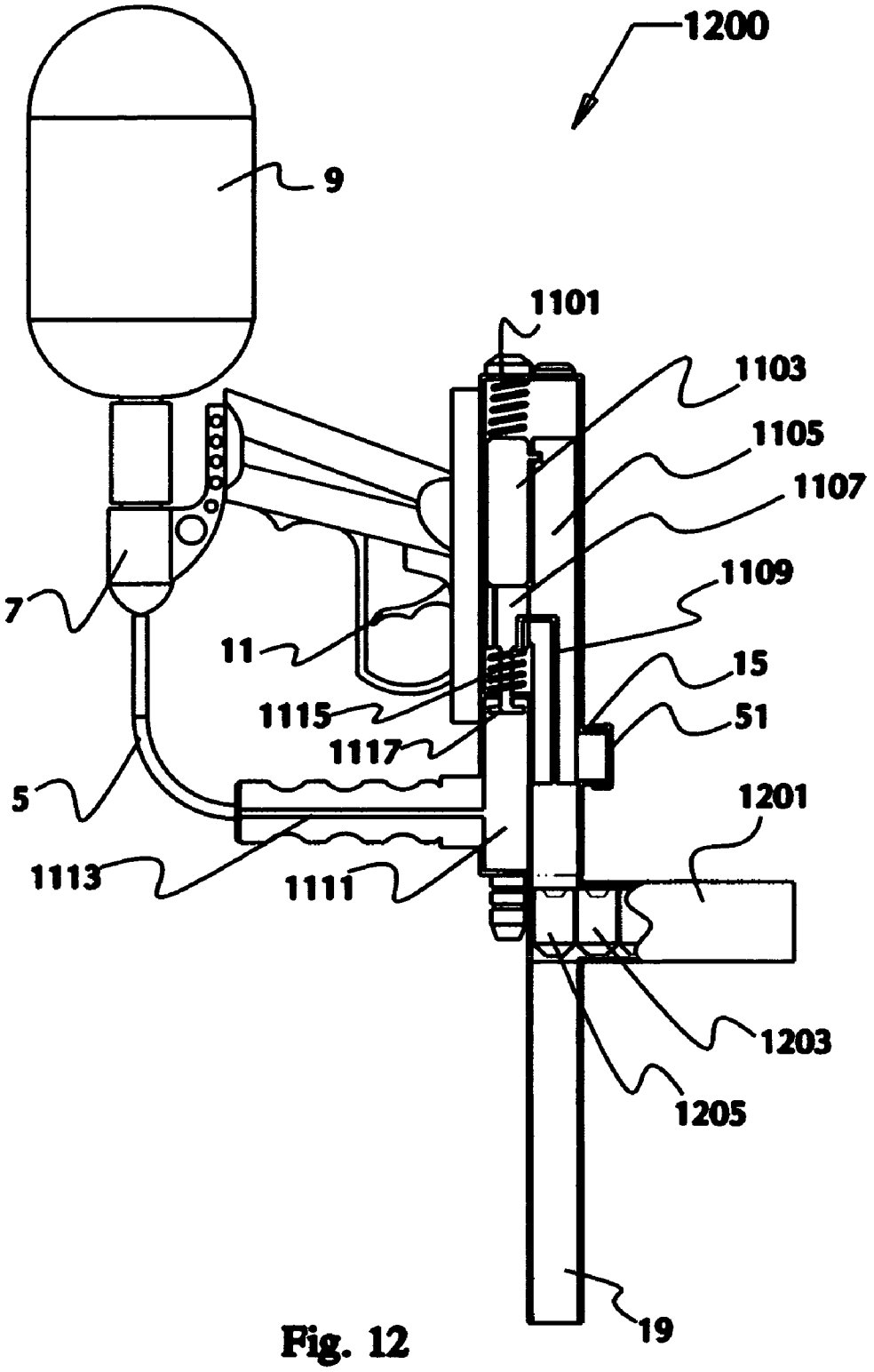
1200
9
1101
1103
1105
1107
1109
7
11
15
1115
51
1117
5
1201
1113
1111
1203
1205
19

Fig. 12

Examples of Bullet Shapes

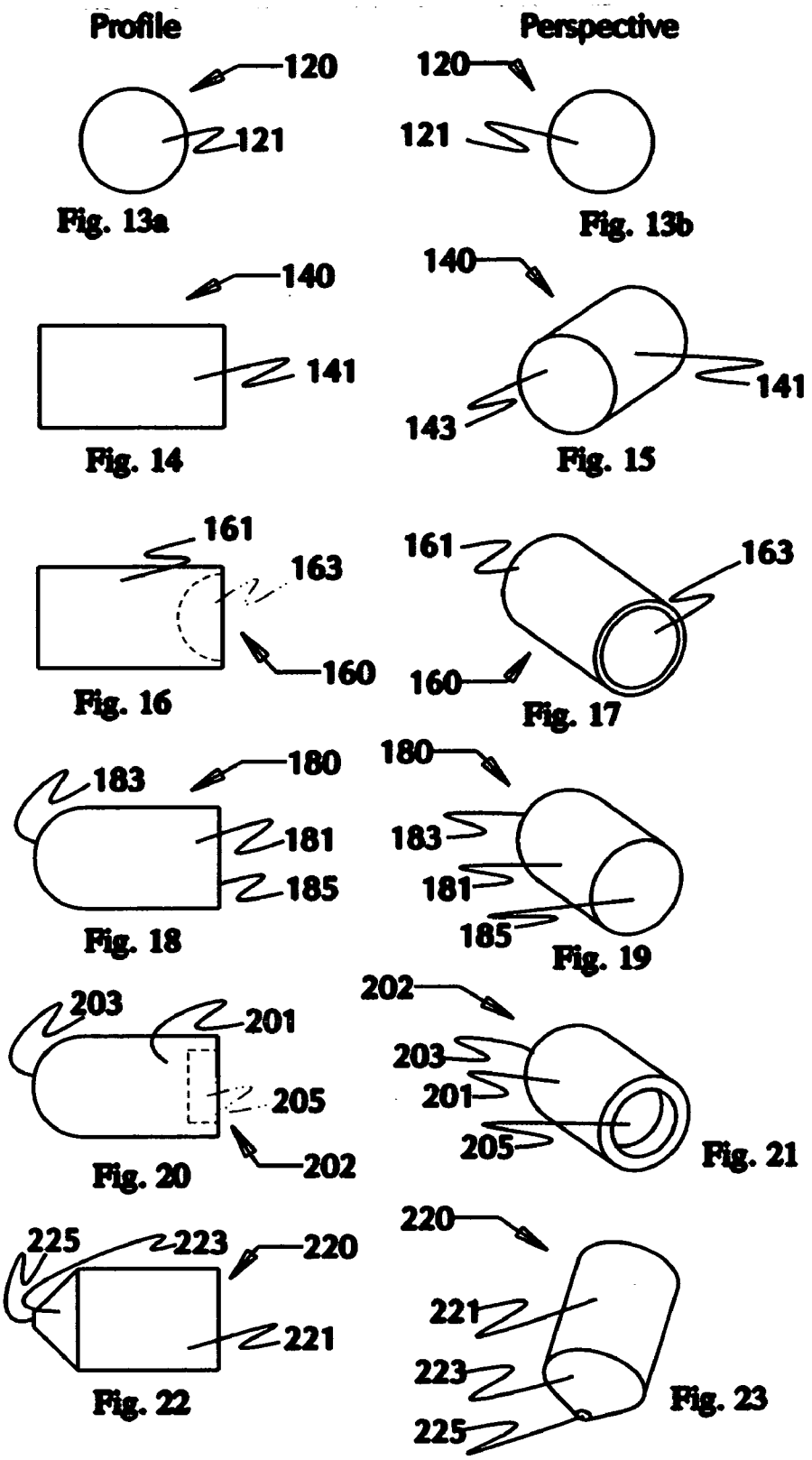

Examples of Bullet Shapes

Profile

Perspective

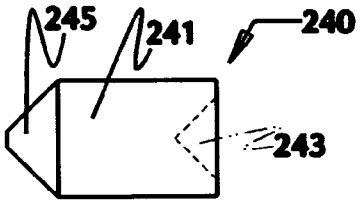

Fig. 24

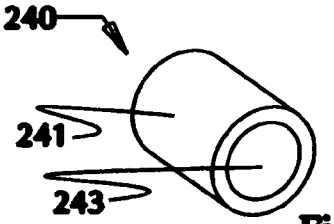

Fig. 25

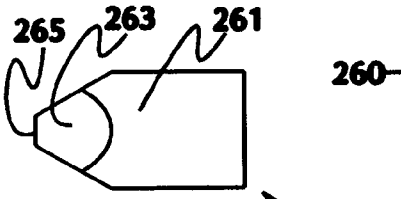

Fig. 26

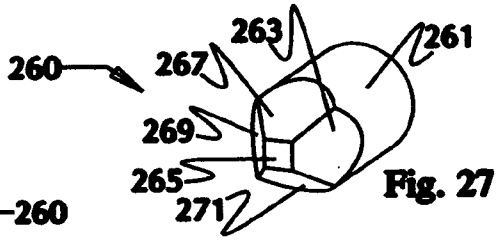

Fig. 27

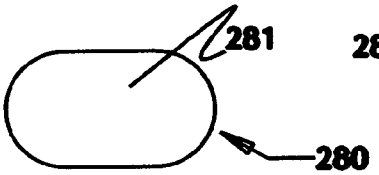

Fig. 28

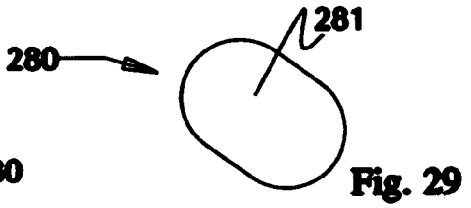

Fig. 29

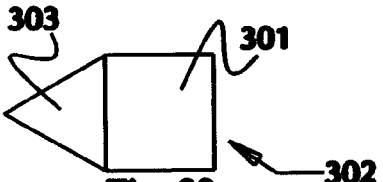

Fig. 30

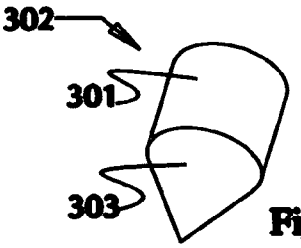

Fig. 31

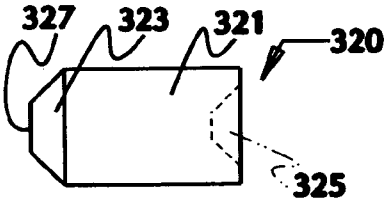

Fig. 32

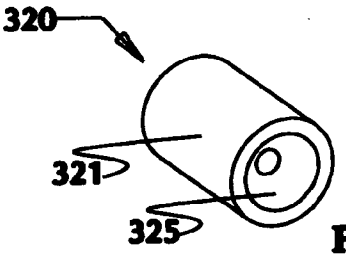

Fig. 33

Examples of Bullet Density/Material

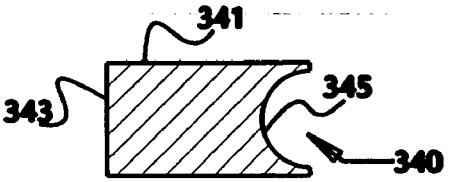

Fig. 34

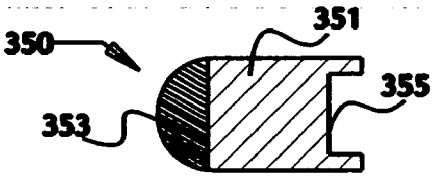

Fig. 35

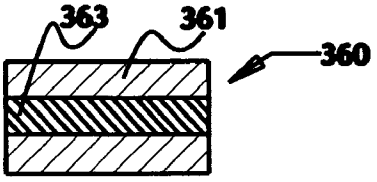

Fig. 36

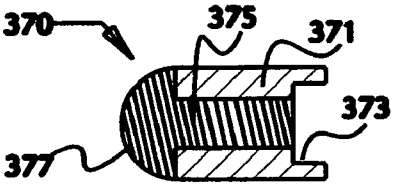

Fig. 37

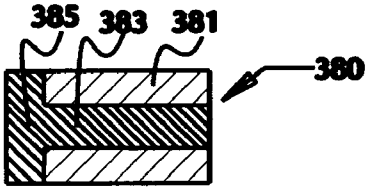

Fig. 38

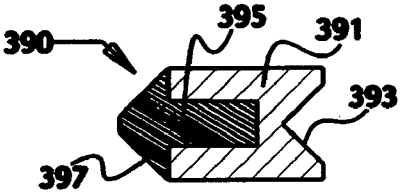

Fig. 39

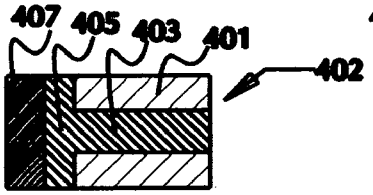

Fig. 40

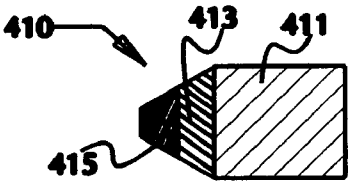

Fig. 41

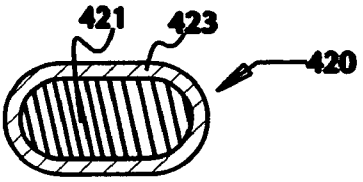

Fig. 42

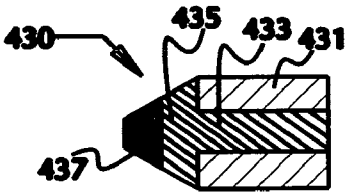

Fig. 43

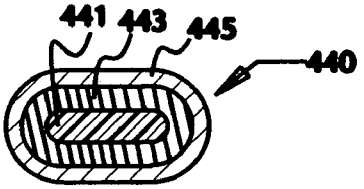

Fig. 44

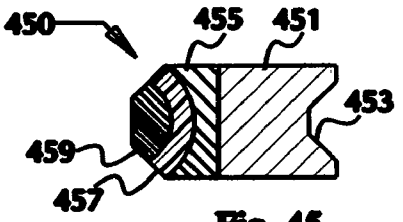

Fig. 45

Examples of Bullet Density/Material

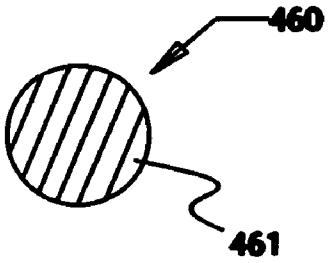

Fig. 46

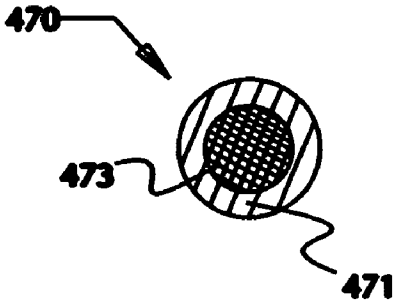

Fig. 47

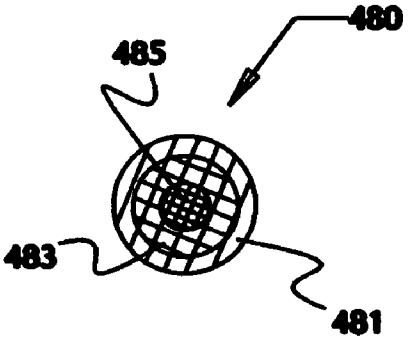

Fig. 48

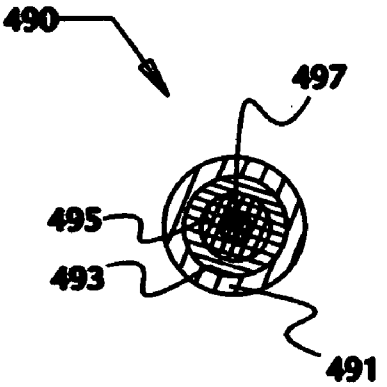

Fig. 49

COMBINATION SOLID PROJECTILE AND PAINTBALL GUN, AND SOLID PROJECTILE ADAPTER FOR PAINTBALL GUN

BACKGROUND OF THE INVENTION

[0001] 1. Field of the Invention

[0002] The present invention relates to paintball guns that have been modified to receive adapters to accommodate liquid-free projectiles, especially of varied shapes other than spherical. The adapters are of two diverse sorts. One replaces a conventional paintball gun hopper and feeds the solid projectiles through the original paintball feed port. The other is a more sophisticated device that screws or otherwise fits in between a paintball gun bore tube and a removable barrel. This embodiment can be adapted to accommodate longer projectiles with diverse shapes and materials of construction.

[0003] 2. Information Disclosure Statement

[0004] The following patents relate to paintball devices:

[0005] U.S. Pat. No. 6,644,295 describes a pneumatic assembly preferably includes a compressed gas storage area, a firing valve, and a bolt arranged along substantially the same horizontal axis. A valve retainer, a compressed gas storage area housing, and a bolt assembly are preferably arranged to form a substantially contiguous assembly housing. The firing valve is preferably configured to open when gas pressure is applied to a surface area thereof through a control valve. The bolt is preferably configured to move to a closed position before the firing valve is actuated. The control valve is preferably an electro-pneumatic valve configured to actuate the firing valve in response to a trigger pull of a paintball gun.

[0006] U.S. Pat. No. 6,516,791 B2 describes an electrically operated paintball gun operable to shoot paintballs including a barrel, a trigger, and a breech connected to a rear end of the barrel, as well as a bolt moveable in the breech between a rearward position and a forward shooting position. A pneumatic circuit is provided to drive the bolt towards the forward position and includes a control valve in the form of a solenoid valve to receive gas under pressure and direct it into a chamber at the rear of the bolt when the gun is shot. An electronic circuit controls the pneumatic circuit and is operated by an electrical switch operated by the trigger. A gas valve mechanism is opened by engagement by the bolt, when the latter is driven forwardly to the shooting position, to permit the passage of relatively high pressure propellant has into the barrel to propel a paintball. This valve mechanism preferably includes a pivotable lever or a metal ball that normally projects into the bolt chamber and that is engaged and moved by the bolt when the bolt is driven to its forward position.

[0007] U.S. Pat. No. 6,488,019 B2 describes a feeder for use with a paintball gun has an inlet through which paintballs enter, and an outlet through which they exit. A feed mechanism disposed inside the feeder frictionally engages the paintballs as the enter and transports them to the outlet. The feed mechanism may include rotatable disks. The space between the rotatable disks may be less than the diameter of the paintballs. At least one of the rotatable disks may include a material that flexes to accommodate a paintball. The paintball feeding system may additionally incorporate a circuit that senses when the gun is fired and controls the rate at which paintballs are fed into the paintball gun.

[0008] U.S. Pat. No. 6,360,736 B1 describes an air gun firing system, working in conjunction with and air gun with a barrel and comprising: a bullet chamber on the front end of the main body, connected with the barrel for housing a bullet to be fired through the barrel; a lock, movable along the axis of the barrel, pushing the bullet into the bullet chamber, as driven by a lock driver, enabling the bullet to be fired, with a spring pulling back the lock; a gas chamber for driving the lock driver, accommodating the lock driver; a high-pressure gas container; a first pressure reducing valve; a second pressure reducing valve; and an electromagnetic valve, controlling flow of low-pressure gas into the gas chamber. When the electromagnetic valve opens, low-pressure gas flows into the gas chamber, driving the lock driver. When the electromagnetic valve closes, the spring pulls back the lock and the lock driver.

[0009] U.S. Pat. No. 5,640,945 describes and improved paintball and gun therefor cooperate so that the range of the paintball and its accuracy are significantly improved. The external surface of the paintball in contoured so as to increase the frictional interaction with air, and the barrel of the paintball gun interacts differentially with the upper and lower hemispheres of the ball so that significant backspin is imparted to the paintball. Accordingly, the paintball experiences lift in flight which substantially increases its range and accuracy. The interaction of the ball with the barrel may be wholly aerodynamic. The interior of the paintball is preferably baffled so that paint therein rotates with the shell, preventing the backspin from being damped out rapidly.

[0010] U.S. Pat. No. 5,373,832 describes the present invention is a multiple projectile-shooting air gun. It includes a main housing having a barrel adapted for receiving a projectile, a handle and a trigger, as well as a high pressure, inflatable bladder connected to the main housing, the bladder having an inlet and outlet. There is also a pressurizing mechanism for providing air pressure to the bladder to inflate it. The pressurizing mechanism is physically connected to the housing and functionally connected to the bladder inlet. There is a bladder deflation valve having an upstream side and a downstream side, and it is connected to the bladder outlet at the valve's upstream side, and is connected to the trigger for opening and closing thereof, and is connected to a projectile launch port at the valve's downstream side for launching a projectile upon deflation of at least a portion of the bladder when it has been inflated. The launch port is located in the barrel of the main housing and connected to the downstream side of the bladder deflation valve, and is functionally connected to a launch tube adapted for receiving and shooting a projectile. The launch tube is one of a plurality of launch tubes which are located on a rotating magazine. The magazine advances after each shot to position the next launch tube with projectile for firing.

[0011] U.S. Pat. No. 4,843,751 describes the cylinder, with an axial attachment and axially perforated, is fixed in the firearm casing; a sliding element forms a trigger and housing for the magazine for the projectiles, the said element being subjected to the action of a return spring in the direction opposite to that of the manual action on the trigger; a thrust connection is provided between the said piston and the said

element in order to actuate, through the travel of the trigger when pressed, the loading of the spring and, at the end of the said travel, the release of the piston.

[0012] U.S. Pat. No. 3,818,887 describes a toy air gun featuring a magazine detachably mounted to the gun for sequentially urging pellets into a chamber contained therein, a hollow cylinder provided at the forward end thereof with a nozzle and being operatively mounted for sliding movement within the gun between a first position wherein the nozzle is positioned rearwardly of that part of the chamber into which the pellets are fed and a second position wherein the nozzle extends within the barrel of the gun, the cylinder, the inoperative position of a trigger mechanism formed as a part of the gun holding the piston in its rearward position, the piston normally being urged t move forwardly within the cylinder and a slide mechanism operatively mounted to the gun such that as a child moves same rearwardly, the cylinder is caused to move rearwardly eventually contracting and forcing the piston rearwardly eventually contacting and forcing the piston rearwardly to its cocked position, after which the cylinder returns to its forward position moving a pellet introduced from the magazine into the chamber of the gun, after which actuation of the trigger mechanism releases the piston to move forwardly within the cylinder forcing air normally contained therein outwardly through the nozzle causing the pellet to be propelled out of the barrel of the gun.

[0013] U.S. Pat. No. 3,726,266 describes a gas-operated multiple shot projectile firing device with a circular and rotatable magazine which includes a plurality of chambers, each of which holds a dart-like projectile. A lever is associated with the projectile device and performs the dual function of cocking the firing mechanism and rotating the dart-filled magazine such that a plurality of projectiles can be successively fired upon a single loading. The device is particularly suited for short range firing and may be designed for dart projectiles of various calibers.

[0014] U.S. Pat. No. 3,111,121 describes an air gun comprising a casing, a cylinder slidably mounted in said casing, a tubular cylinder extension fixed to said cylinder and slidably movable in said casing into alignment with and adjacent said barrel from a position spaced from said barrel, said cylinder extension having an end provided with a resilient ring, said casing having an opening therein, a magazine detachable secured to said casing in said opening, a plurality of cartridges in said magazine, each of said cartridges including a hollow bullet head and a case, said case having opposite ends, both said ends being open, said bullet head being detachably secured to said case, said magazine successively supporting said cartridges in alignment with said barrel and engageable with said resilient ring on said cylinder extension for forming an air seal communicating said cylinder with said bullet head end for movement therewith, a piston in said cylinder, a piston rod attached to said piston and extending outwardly of said cylinder, spring means in said cylinder normally urging said piston towards said extension, releasable means in said casing for holding said piston rod against movement so as to compress said spring means, and extractor means mounted on said cylinder extension and engageable with said case for holding said case against said resilient ring in communication with said cylinder.

[0015] U.S. Pat. No. 2,737,942 describes a toy gun construction comprising a gun-shaped casing, a bolt, longitudinally slideable in said casing and spring biased to a forward position, said bolt having a trigger-engaging projection depending therefrom, said bolt serving to propel a pellet from said casing upon its spring being depressed and released, said casing having opposing trigger-engaging guideways lying under said bolt, a one-piece molded trigger element having an elongated substantially flat body portion with side edges longitudinally slideable along said guideways and spring biased to a forward position, an integral pull finger depending from said body portion, an integral post extending upwardly from said post over the flat body portion, an integral flat deflectable leaf spring-like finger extending forwardly from said post over the flat body portion, said deflectable finger being biased upwardly and having an integral upstanding latch projection engaging the bolt projection when in its forward position, a cam projection integrally formed on the spring finger adjacent the latch projection and means on the casing engageable with said cam as the trigger is pulled to deflect the spring finger and disengage its projection from the bolt projection whereby to release the bolt so as to propel the pellet from the gun.

[0016] Notwithstanding the prior art, the present invention is neither taught nor rendered obvious thereby.

SUMMARY OF THE INVENTION

[0017] The present invention relates to a combination solid projectile and paintball gun. It includes a main housing, a trigger, a barrel, a first projectile port, a second projectile port, means for opening and closing the ports, and an adapter for attachment to the gun for feeding and firing solid projectiles. By "solid" is meant having no liquid, and includes dense, hard materials as well as soft porous materials. These solid projectiles could be foam, plastic, cork, wood, or other material or combinations thereof.

[0018] The main housing is connected to a compressed gas source. There is a compressed gas line from the main housing to a connection mechanism for connection to the compressed gas source. A compressed gas valve is located on the line and has a closed position and open position, with biasing means for biasing the valve in its closed position. There is a bore in the main housing downstream from the valve, and functionally connected to the valve and line to receive compressed gas when the valve is opened. There is a piston contained within the bore, the piston having a rest position toward the valve and a fire position away from the valve, means for moving the piston from its firing position to its rest position and for biasing the piston in its rest position.

[0019] The trigger is connected to the valve such that when the trigger is activated, the valve moves to its open position and returns to its closed position. The barrel is usually removable and extends outwardly from the bore and together with the bore, creates a firing path for shooting a projectile therefrom with compressed gas power.

[0020] The first projectile port is connected to the firing path and adapted to receive sequential paintballs and adapted to connect to a paintball feeder device. There is a port closing and opening means connectable to the first projectile port and the second projectile port.

[0021] The adapter connects between the bore and the barrel, and has a second projectile port located in the firing

path and it is adapted to receive sequential liquid-free projectiles and adapted to connect to a liquid-free projectile feeder magazine. It has a storage area and feeding mechanism.

[0022] An optional second projectile port closing and opening means may be included that may be connectable to or connected to the second projectile port.

[0023] The combination soft projectile and paintball gun of the present invention includes an attachable, removable paintball feeder device, e.g. a hopper, for attachment to the first port, and also includes a liquid-free projectile feeder magazine for attachment to the second port. The adapter and liquid-free projectile magazine may be permanently or separably connected to one another.

[0024] The liquid-free projectile magazine may be a stacking magazine with a spring and plate adapted to receive a plurality of soft liquid-free projectiles and to bias them toward the firing path, e.g., it may be a stacking magazine that is a vertical magazine or a banana clip magazine. Alternatively, the magazine is a rotary magazine. It may be a manually operated rotary magazine or it may be an automatically advancing turret magazine. The magazine may contain a plurality of liquid-free projectiles having a shape selected from the group consisting of bullet-shaped, spherical, elliptical, disc-shaped and cylindrical.

[0025] In another embodiment of the present invention, a conventional paintball gun includes a novel adapter housing having attachment means adapted to connect directly to a paintball gun feeder port. This adapter has a liquid-free projectile storage area, such as a magazine or turret such as a spring fed, manual rotary, or automatic turret mechanism and structure and has a feeding means for feeding the liquid-free projectiles sequentially from the storage area to the paintball gun feeder port.

BRIEF DESCRIPTION OF THE DRAWINGS

[0026] The present invention should be more fully understood when the specification herein is taken in conjunction with the drawings appended hereto wherein:

[0027] **FIG. 1** shows a side oblique view of a prior art conventional paintball gun;

[0028] **FIG. 2** illustrates a side oblique view of one embodiment of a present invention liquid-free projectile adapter wherein the adapter is connected to the paintball feeder port;

[0029] **FIG. 3** shows another present invention embodiment wherein a spring and plate fed banana clip adapter is fitted between the barrel and main housing bore of the paintball gun and operates separately from the paintball feeder port;

[0030] **FIG. 4** shows another present invention embodiment wherein a gravity fed top clip adapter is fitted between the barrel and main housing bore of the paintball gun and operates separately from the paintball feeder port;

[0031] **FIG. 5** shows another present invention embodiment wherein a rotary magazine adapter is fitted between the barrel and main housing bore of the paintball gun and operates separately from the paintball feeder port;

[0032] **FIG. 6** shows another present invention embodiment wherein a spring fed bottom magazine adapter is fitted between the barrel and main housing bore of the paintball gun and operates separately from the paintball feeder port;

[0033] **FIG. 7** shows an oblique side view of a present invention banana magazine with integrated barrel;

[0034] **FIG. 8** shows an oblique side view of a present invention gravity fed top angled magazine with integrated barrel;

[0035] **FIG. 9** shows an oblique side view of a present invention turret magazine with compressed air-driven automation for single advancement with each shot and/or gas assisted firing, and with an integrated barrel;

[0036] **FIG. 10** shows an oblique side view of a present invention wide bottom, spring fed magazine with integrated barrel;

[0037] **FIG. 11** shows a partial cut side view of a present invention embodiment gun showing functional internal mechanisms and utilizing a **FIG. 9**-type turret magazine adapter;

[0038] **FIG. 12** shows a side cut view of a present invention gun with a solid projectile top mounted magazine;

[0039] **FIG. 13 a** shows a side (profile) view of a present invention liquid-free projectile, and **FIG. 13***b* shows a perspective view thereof;

[0040] **FIG. 14** shows a side (profile) view of a another present invention liquid-free projectile, and **FIG. 15** shows a perspective view thereof;

[0041] **FIG. 16** shows a side (profile) view of a another present invention liquid-free projectile, and **FIG. 17** shows a perspective view thereof;

[0042] **FIG. 18** shows a side (profile) view of a another present invention liquid-free projectile, and **FIG. 19** shows a perspective view thereof;

[0043] **FIG. 20** shows a side (profile) view of a another present invention liquid-free projectile, and **FIG. 21** shows a perspective view thereof;

[0044] **FIG. 22** shows a side (profile) view of a another present invention liquid-free projectile, and **FIG. 23** shows a perspective view thereof;

[0045] **FIG. 24** shows a side (profile) view of a another present invention liquid-free projectile, and **FIG. 25** shows a perspective view thereof;

[0046] **FIG. 26** shows a side (profile) view of a another present invention liquid-free projectile, and **FIG. 27** shows a perspective view thereof;

[0047] **FIG. 28** shows a side (profile) view of a another present invention liquid-free projectile, and **FIG. 29** shows a perspective view thereof;

[0048] **FIG. 30** shows a side (profile) view of a another present invention liquid-free projectile, and **FIG. 31** shows a perspective view thereof;

[0049] **FIG. 32** shows a side (profile) view of a another present invention liquid-free projectile, and **FIG. 33** shows a perspective view thereof; and,

[0050] **FIGS. 34 through 49** show side cut views of various profiles and materials of liquid-free projectiles of the present invention.

DETAILED DESCRIPTION OF THE PRESENT INVENTION

[0051] **FIG. 1** illustrates a prior art paintball gun **1**. It includes a main housing **3** with a compressed gas source **9** connected to main housing **3** via compressed gas line **5** and connection **7**. Contained within main housing **3** is a valve (not shown) connected to compressed gas line **5**.

[0052] This gas valve has a closed position and an open position, as with any conventional or prior art paintball gun. There is a built in biasing means for biasing the valve in its closed position. A bore downstream from the valve contains a piston that has a rest position toward the valve and a fire position away from the valve. The piston is biased to its rest position, by a spring, a moving means such as a cocking mechanism, or other known mechanisms. Trigger **11** is functionally connected to the valve so that when the trigger is pulled, a burst of pressurized gas expands to move the piston to its firing position. The piston will allow a slug of air to travel a relatively short distance at an extremely high velocity. Paintballs are stored in conventional hopper **13** and are fed individually into paintball feeder port **15** and hence into the bore of tube **17**. When trigger **11** is pulled, a paintball is fired through barrel **19**. Barrel **19** has threads at upstream end **21** for connection and removal to housing **3**'s tube **17**.

[0053] In **FIG. 2**, present invention combination solid projectile and paintball projectile gun **100** includes most of the functional features at the prior art gun **1** of **FIG. 1**, except that hopper **13** has been removed and adapter housing **31** with attachment means **33** has been attached in its place. Adapter housing **31** contains a plurality of solid projectiles **41** that are fed by gravity individually into paintball feeder port **15** and are subsequently fired with trigger **11** using the force of a compressed gas source **9**. Adapter housing **31** and solid projectiles **41** may have many variations without exceeding the scope of the invention, including vertical top clips, banana clips, and turrets. Likewise, the solid projectiles may be foam, rubber, cork, wood, metal, plastic or any other projectible material or combination of materials. Likewise, it could have many shapes that will fit into the bore and barrel and be moved by the compressed air of the piston.

[0054] **FIG. 3** shows an alternative present invention combination solid projectile and paintball projectile gun **300**. (Identical parts from the previous Figures are identically numbered in this and many of the following Figures, and their details need not be repeated. Further, any known substitute for the prior art components may be substituted without exceeding the scope of the present invention.) In this embodiment, paintball feeder port **15** constitutes a first projectile port and may be opened or closed, depending upon the intended use. In this Figure it is shown closed and sealed with cap **51**. Barrel **19** has been removed and adapter **53**, containing a second projectile port **55** has been screwed into bore tube **17**. In kind, barrel **19** has been screwed into the opposite end of adapter **53** so that adapter **53** is now connected between tube **17** and barrel **19**, as shown. Adapter **53** includes a feed port **55**, a banana clip **59** and liquid-free projectiles **57**.

[0055] **FIG. 4** shows another present invention embodiment wherein a gravity fed top clip adapter **61** is fitted between the barrel **19** and main housing bore tube **17** of the gun **400** and operates separately from the paintball feeder port. Adapter **61** has a feed port **63** and a gravity feed top magazine clip **65**, with a plurality of projectiles, such as liquid-free plastic bullet **67**.

[0056] **FIG. 5** shows another present invention embodiment wherein a rotary magazine adapter **71** is fitted between the barrel **19** and main housing bore tube **17** of gun **500**. It operates separately from the paintball feeder port. Adapter **71** has its own feed port **73** and a rotary turret magazine **75**, with a plurality of projectiles, such as liquid-free soft foam bullet **77**.

[0057] **FIG. 6** shows another present invention embodiment wherein a spring fed bottom magazine adapter **81** is fitted between the barrel **19** and main housing bore tube **17** of the paintball gun and operates separately from the paintball feeder port **15**. Adapter **81** has a feed port **83** and a spring and plate feed bottom magazine clip **85**, with a plurality of projectiles, such as liquid-free rubber bullet **87**.

[0058] **FIG. 7** shows an oblique side view of a present invention component **700**, with banana magazine **701**, integrated barrel **705**, internal feed port **703**, and attachment threading **707**. It may be inserted onto any paintball gun bore tube for which it may be designed, i.e., inside diameters and compatible threading.

[0059] **FIG. 8** shows an oblique side view of a present invention component **800**, with gravity fed top angled magazine **801**, integrated barrel **805**, internal feed port **803**, and attachment threading **807**.

[0060] **FIG. 9** shows an oblique side view of a present invention component **900**, with turret magazine **901** with compressed air-driven automation for single advancement with each shot. Connected to compressed air line **911** and shooting line **915** to a main housing (not shown), is gas line **913**, used to advance the turret a single position after each shot or to assist firing the projectile, or both. It also includes an integrated barrel **905**, internal feed port **903**, and attachment threading **907**.

[0061] **FIG. 10** shows an oblique side view of a present invention component **110**, with bottom magazine **101**, integrated barrel **105**, internal feed port **103**, and attachment threading **107**. It may be inserted onto any paintball gun bore tube for which it may be designed, i.e., inside diameters and compatible threading.

[0062] **FIG. 11** shows details of one embodiment of a present invention combination paintball and liquid-free projectile gun **1100**, (Identical parts from the previous Figures are identically numbered in this and the previous Figures, and their details need not be repeated. Further, any known substitute for the prior art components may be substituted without exceeding the scope of the present invention.) In this embodiment, paintball feeder port **15** constitutes a first projectile port and may be opened or closed, depending upon the intended use. In this Figure it is shown open, with paintball hopper **13** in place. Barrel **19** has been removed and turret magazine adapter **75** with its components discussed below, has been screwed onto the bore tube. In kind, barrel **19** has been screwed into the opposite end of adapter **75** so that adapter **75** is now connected between tube **17** and

barrel **19**, as shown. Adapter **75** includes a feed port, a turret clip and liquid-free projectiles. It includes a pressurized auxiliary gas line **1131** coming from main line **5**. This main line **5** divides into lines **1113** and **1131**, the first going through the handle to the main conventional firing system gas chamber **1111**, and the second going to an area adjacent the barrel firing line, behind the turret port for optimum liquid-free projectile firing. This gun **1100** may have a switch so that one or the other line may be used to fire, or it may be designed for both lines to always receive pressurized gas when fired. (While the drawing shows both the paintball hopper and the turret in place, one or the other should be removed, capped off, and/or closed for a desired projectile to be fired.)

[**0063**] When trigger **11** is pulled, the gas from cylinder **9** exits gas outlet **1109** and this burst of gas pushes against auxiliary valve **1121**, forcing auxiliary valve **1121** forward. Auxiliary valve outlet **1123** line up with gas inlet **1129**, allowing compressed gas to flow into auxiliary valve **1121** through outlet **1123**. The exiting gas propels the solid projectile **1205** out of the gun. As auxiliary valve **1121** moves forward, it opens one or more exhaust gas vents **1119**, allowing gas from outlet **1109** to exit the gun. Auxiliary valve spring **1125** pushes auxiliary valve **1121** back to its rest position, sealing off gas inlet **1129** and exhaust port **1119**. Gas exiting outlet **1123** may be ported, and/or gas from auxiliary gas line **1131** may be ported to advance projectiles in the magazine one position at a time, sequentially. Likewise, exhaust gas from the exhaust gas vents **1119** may be used to advance projectiles. Further, gas from either or both lines **1113** and **1131** may alternatively or additionally be used to propel the projectiles as well as advance the turret projectiles up in the turret magazine.

[**0064**] When the adapter is removed and the gun is reassembled, it may be used as conventional paintball gun.

[**0065**] **FIG. 12** illustrates another present invention gun **1200**, with parts identical to those in the foregoing Figures identically numbered. Here, a top mounted magazine adapter **1201** is added to the end of the firing chamber after the barrel has been removed to provide projectile feed by gravity, such as projectiles **1203** and **1205**. In this embodiment, the identical firing system for the paintballs is used to project the solid projectiles from adapter **1201**.

[**0066**] **FIGS. 11 and 12** show simplified depictions of examples of modified guns. There are many different bolt, hammer, valving, intake, feeding exhausting and other functional components and features that could be used in the alternative without exceeding the scope of the present invention.

[**0067**] **FIG. 13***a* shows a side (profile) view of a present invention liquid-free projectile **120**, and **FIG. 13***b* shows a perspective view thereof. It has a spherical front view and a spherical side view surface **121**, and is indeed a sphere.

[**0068**] **FIG. 14** shows a side (profile) view of a another present invention liquid-free projectile **140**, and **FIG. 15** shows a perspective view thereof. It has a cylindrical side **141** and flat front **143**.

[**0069**] **FIG. 16** shows a side (profile) view of a another present invention liquid-free projectile **160**, and **FIG. 17** shows a perspective view thereof. It has a cylindrical side **161** and recessed dome rear **163**.

[**0070**] **FIG. 18** shows a side (profile) view of a another present invention liquid-free projectile **180**, and **FIG. 19** shows a perspective view thereof. It has a cylindrical side **181**, a hemispherical front **183**, and flat back **185**.

[**0071**] **FIG. 20** shows a side (profile) view of a another present invention liquid-free projectile **202**, and **FIG. 21** shows a perspective view thereof. It has a cylindrical side **201**, a hemispherical front **203**, and a recessed back **205**.

[**0072**] **FIG. 22** shows a side (profile) view of a another present invention liquid-free projectile **220**, and **FIG. 23** shows a perspective view thereof. It has a cylindrical side **221** and conical front **223** with a flat tip **225**.

[**0073**] **FIG. 24** shows a side (profile) view of a another present invention liquid-free projectile **240**, and **FIG. 25** shows a perspective view thereof. It has a cylindrical side **241**, a recessed back **243**, and a conical flat tipped front **245**.

[**0074**] **FIG. 26** shows a side (profile) view of a another present invention liquid-free projectile **260**, and **FIG. 27** shows a perspective view thereof. It has a cylindrical side **261**, and a tetragonal cleaved front with flats **263**, **267**, **269** and **271**, and flat tip **265**.

[**0075**] **FIG. 28** shows a side (profile) view of a another present invention liquid-free projectile **280**, and **FIG. 29** shows a perspective view thereof. It has an ellipsoidal profile **281**.

[**0076**] **FIG. 30** shows a side (profile) view of a another present invention liquid-free projectile **302**, and **FIG. 31** shows a perspective view thereof. It has a cylindrical side **301** and a conical front **303**.

[**0077**] **FIG. 32** shows a side (profile) view of a another present invention liquid-free projectile **320**, and **FIG. 33** shows a perspective view thereof. It has a cylindrical side **321**, a recessed rear **325**, and a conical front **323** with a flat tip **327**.

[**0078**] **FIGS. 34 through 49** show side cut views of various profiles and materials of liquid-free projectiles of the present invention.

[**0079**] **FIG. 34** shows a liquid-free projectile **340** with a flat front **343**, a cylindrical body **341** and a hemispherical recessed rear **345** to enhance the capture of forward air pressure thereon during firing.

[**0080**] **FIG. 35** shows a liquid-free projectile **350** with a hemispherical front **353**, made of a first material, and a cylindrical body **351**, made of a second material, and a recessed rear **355** to enhance the capture of forward air pressure thereon during firing.

[**0081**] **FIG. 36** shows a liquid-free projectile **360** made of a first material cylindrical body **361**, with a cylindrical center **363** made of a second material.

[**0082**] **FIG. 37** shows a liquid-free projectile **370** with a hemispherical front **377** with an inner cylinder **375**, both made of a first material, and an outer cylindrical body **371**, made of a second material, with a recessed rear **373** to enhance the capture of forward air pressure thereon during firing.

[**0083**] **FIG. 38** shows a liquid-free projectile **380** with a flat front **385** and an inner cylinder **383**, made of a first material, and an outer cylindrical body **381**, made of a second material.

[0084] **FIG. 39** shows a liquid-free projectile **390** with a conical front **397** and short insert central cylinder **395**, both made of a first material, and a cylindrical body **391**, made of a second material, and a recessed conical rear **393** to enhance the capture of forward air pressure thereon during firing.

[0085] **FIG. 40** shows a liquid-free projectile **402** with a flat front **407**, made of a first material, and a cylindrical wide front inner body **405** and narrow body **403**, made of a second material, and a rear outer cylinder **401** made of a third material.

[0086] **FIG. 41** shows a liquid-free projectile **410** with a truncated conical tip **415** made of a first material, a back portion tip **413**, made of a second material, and a main rear cylinder **411** made of a third material.

[0087] **FIG. 42** shows a liquid-free projectile **420** with an elliptical front view. It has an inside **421** made of a first material, and an outside layer or skin **423** made of a second material.

[0088] **FIG. 43** shows a liquid-free projectile **430** with a tapered flat tip front **437**, made of a first material, and a cylindrical wide front inner body **435** and narrow body **433**, made of a second material, and a rear outer cylinder **431** made of a third material.

[0089] **FIG. 44** shows a liquid-free projectile **440** with an elliptical front view. It has an inside **441** made of a first material, and an intermediate layer **443** made of a second material, and an outside layer or skin **445** made of a third material.

[0090] **FIG. 45** shows a liquid-free projectile **450** with a truncated conical tip **459** made of a first material, an arcuated center tip portion **457** made of a second material, a back portion tip **455** made of a third material, and a main rear cylinder **451** with a rear recess **453**, made of a fourth material.

[0091] **FIG. 46** illustrates a cut view of a projectile **460** having a construction of a single material **461**.

[0092] **FIG. 47** illustrates a cut view of a projectile **470** having a construction of a first, inner material **473** and a second, outer material **471**.

[0093] **FIG. 48** illustrates a cut view of a projectile **480** having a construction of a first, innermost material **485** and a second, intermediate material **483**, and a third, outer material **481**.

[0094] **FIG. 49** illustrates a cut view of a projectile **490** having a construction of a first, innermost material **497** and a second, intermediate material **495**, and a third, intermediate material **493**, and a fourth outer material **491**.

[0095] The following is a table which refers to the foregoing examples of the various projectile shapes and constituents. While this list is extensive, it is not comprehensive, and is intended to be illustrative of the present invention projectiles:

FIGURE	ITEM	MATERIAL
34	341	Polymer
35	351	Rubber
35	353	Metal
36	361	Foam
36	363	Wood
37	371	Polymer
37	375	Ceramic
38	381	Cork
38	385	Metal
39	391	Wood
39	397	Polymer
40	401	Foam
40	403	Metal
40	407	Ceramic
41	411	Wood
41	413	Ceramic
41	415	Rubber
42	421	Metal
42	423	Polymer
43	431	Rubber
43	433	Cork
43	437	Ceramic
44	441	Metal
44	443	Polymer
44	445	Rubber
45	451	Foam
45	455	Ceramic
45	457	Polymer
45	459	Metal
46	461	Polymer
47	471	Foam
47	473	Metal
48	481	Ceramic
48	483	Cork
48	485	Metal
49	491	Rubber
49	493	Cork
49	495	Polymer
49	497	Metal

[0096] It can now be seen that various combinations of materials and shapes may be formulated for needs or desires of the user (sport, indoor, outdoor, law enforcement, painless, stinging, debilitating, etc.).

[0097] Obviously, numerous modifications and variations of the present invention are possible in light of the above teachings. It is therefore understood that within the scope of the appended claims, the invention may be practiced otherwise than as specifically described herein. For example, while the magazines and turrets are shown in the Figures as having a firing chamber connected to it, the magazine or turret could be separable from its firing chamber to permit reloading, cleaning, maintenance, and/or replacement thereof without unscrewing the entire device from the gun and barrel. Alternatively, the magazine and the firing chamber could be integral, and loading of projectiles, etc., could be accomplished via an access area or door. Additionally, present invention guns could be designed with two separate barrels, e.g. side-by-side or over-under, one for paintballs and one for the liquid-free projectiles or fun grenades. As another alternative, there could be a single attachment that could have separate hopper portions for each of the paintballs and the solid projectiles with a gate or valve to permit only one or the other to drop into the gun for firing.

What is claimed is:

1. A combination solid projectile and paintball gun, which compromises:

(a.) a main housing, said main housing being connected to a compressed gas source via a compressed gas line and a source connection, and having a compressed gas valve on said compressed gas line, said valve having a closed position and open position, biasing means for biasing said valve in its closed position, a bore downstream from said valve, and functionally connected to said line, a piston contained within said bore, said piston having a rest position toward said valve and a fire position away from said valve, means for moving said piston from its firing position to its rest position and for biasing said piston in its rest position;

(b.) a trigger connected to said valve such that when said trigger is activated said valve moves to its open position and returns to its closed position;

(c.) a barrel extending outwardly from said bore and together with said bore, creating a firing path for shooting a projectile therefrom with compressed gas power;

(d.) a first projectile port connected to said firing path and adapted to receive sequential paintballs and adapted to connect to a paintball feeder device;

(e.) a projectile port closing and opening means connectable to said first projectile port; and,

(f.) an adapter connected to said firing path, said adapter having a second projectile port and adapted to receive sequential liquid-free projectiles and adapted to connect to a liquid-free projectile feeder magazine.

2. The combination solid projectile and paintball gun of claim 1 wherein said gun further includes a paintball feeder device.

3. The combination solid projectile and paintball gun of claim 1 wherein said gun further includes a solid projectile feeder magazine.

4. The combination solid projectile and paintball gun of claim 3 wherein said magazine is a stacking magazine with a spring and plate adapted to receive a plurality of liquid-free projectiles and to bias them toward said firing path.

5. The combination solid projectile and paintball gun of claim 4 wherein said stacking magazine is a vertical magazine.

6. The combination solid projectile and paintball gun of claim 4 wherein said stacking magazine is a banana clip magazine.

7. The combination solid projectile and paintball gun of claim 3 wherein said magazine is a rotary magazine.

8. The combination solid projectile and paintball gun claim 7 wherein said rotary magazine is an automatically advancing turret magazine.

9. The combination solid projectile and paintball gun of claim 3 wherein said magazine contains a plurality of liquid-free projectiles having a shape selected from the group consisting of bullet-shaped, spherical, elliptical, disc-shaped and cylindrical.

10. The combination solid projectile and paintball gun of claim 9 wherein said projectiles are made of material selected from the group consisting of foam, plastic, rubber, wood, cork and combinations thereof.

11. A solid projectile adapter for a paintball gun having a paintball feeder port, which comprises:

an adapter housing having attachment means adapted to connect directly to a paintball gun feeder port, having a solid projectile storage area, and having feeding means for feeding solid projectiles sequentially from said storage area to said paintball gun feeder port.

12. The solid projectile adapter for a paintball gun having a paintball feeder port of claim 11 wherein said adapter housing includes a stacking magazine with a spring and plate adapted to receive a plurality of soft liquid-free projectiles and to bias them toward said feeder port.

13. The solid projectile adapter for a paintball gun having a paintball feeder port of claim 11 wherein said adapter housing includes a rotary magazine adapted to receive a plurality of solid liquid-free projectiles and to sequentially feed them to said feeder port.

14. The solid projectile adapter for a paintball gun having a paintball feeder port of claim 13 wherein said rotary magazine is an automatically advancing turret magazine.

15. The solid projectile adapter for a paintball gun having a paintball feeder port of claim 11 wherein said solid projectile storage area contains a plurality of solid projectiles that are made of material selected from the group consisting of foam, plastic, rubber, wood, cork and combinations thereof.

16. A solid projectile adapter for a paintball gun having a paintball feeder port, a main housing, a base, a bore located in said base and extending outwardly with a barrel connection, and having a removable barrel connectable to said barrel connection, which comprises:

an adapter housing having an adapter barrel, said adapter barrel having attachment means adapted to connect directly to a paintball gun barrel connection, said adapter housing having a solid projectile storage area, and having feeding means for feeding solid projectiles sequentially from said storage area to said adapter barrel for shooting from said paintball gun.

17. The solid projectile adapter for a paintball gun of claim 16 wherein said adapter housing includes a stacking magazine with a spring and plate adapted to receive a plurality of liquid-free projectiles and to bias them toward said barrel.

18. The solid projectile adapter for a paintball gun of claim 16 wherein said adapter housing includes a rotary magazine adapted to receive a plurality of liquid-free projectiles and to sequentially feed them to said barrel.

19. The projectile adapter for a paintball gun of claim 18 wherein said rotary magazine is an automatically advancing turret magazine.

20. The solid projectile adapter for a paintball gun of claim 16 wherein said solid projectile storage area contains a plurality of solid projectiles that are made of material selected from the group consisting of foam, plastic, rubber, wood, cork and combinations thereof.

* * * * *