Trials@uspto.gov
571-272-7822

Paper 37
Date: September 9, 2021

UNITED STATES PATENT AND TRADEMARK OFFICE

BEFORE THE PATENT TRIAL AND APPEAL BOARD

APPLE INC.,
Petitioner,

v.

PARUS HOLDINGS, INC.,
Patent Owner.

IPR2020-00686
Patent 7,076,431 B2

Before DAVID C. MCKONE, STACEY G. WHITE, and SHELDON M. MCGEE, *Administrative Patent Judges*.

MCKONE, *Administrative Patent Judge*.

JUDGMENT
Final Written Decision
Determining No Challenged Claims Unpatentable
35 U.S.C. § 318(a)
Denying Patent Owner's Motion to Exclude
37 C.F.R. § 42.64

I. INTRODUCTION

A. Background and Summary

Apple Inc. ("Petitioner") filed a Petition requesting an *inter partes* review of claims 1–7, 9, 10, 13, 14, 18–21, and 25–30 of U.S. Patent No. 7,076,431 B2 (Ex. 1001, "the '431 patent"). Paper 1 ("Pet."). Parus Holdings, Inc. ("Patent Owner") filed a Preliminary Response to the Petition. Paper 6 ("Prelim. Resp."). Pursuant to 35 U.S.C. § 314, we instituted this proceeding. Paper 9 ("Dec.").

Patent Owner filed a Patent Owner's Response (Paper 15, "PO Resp."), Petitioner filed a Reply to the Patent Owner's Response (Paper 19, "Reply"), and Patent Owner filed a Sur-reply to the Reply (Paper 21, "Sur-reply"). Patent Owner filed a Motion to Exclude certain evidence submitted by Petitioner (Paper 29, "Mot. Excl."), to which Petitioner filed an Opposition (Paper 30, "Opp. Mot. Excl."). Patent Owner filed a Reply to Petitioner's Opposition to its Motion to Exclude (styled a "Sur-reply"). Paper 32 ("Reply Mot. Excl."). An oral argument was held in this proceeding and IPR2020-00687 on June 22, 2021. Paper 36 ("Tr.").

We have jurisdiction under 35 U.S.C. § 6. This Decision is a final written decision under 35 U.S.C. § 318(a) as to the patentability of claims 1–7, 9, 10, 13, 14, 18–21, and 25–30. Based on the record before us, Petitioner has not proved, by a preponderance of the evidence, that claims 1–7, 9, 10, 13, 14, 18–21, and 25–30 are unpatentable.

We also deny Patent Owner's Motion to Exclude.

B. Related Matters

The parties identify the following district court proceedings as related to the '431 patent: *Parus Holdings Inc. v. Apple, Inc.*, No. 6:19-cv-00432

(W.D. Tex.) ("the Texas case"); *Parus Holdings Inc. v. Amazon.com, Inc.*, No. 6:19-cv-00454 (W.D. Tex.); *Parus Holdings Inc. v. Samsung Electronics Co., Ltd.*, No. 6:19-cv-00438 (W.D. Tex.); *Parus Holdings Inc. v. Google LLC*, No. 6:19-cv-00433 (W.D. Tex.); and *Parus Holdings Inc. v. LG Electronics, Inc.*, No. 6:19-cv-00437 (W.D. Tex.). Pet. 72; Paper 5, 1.

The parties also identify U.S. Patent No. 6,721,705 and U.S. Patent No. 9,451,084 as related to the '431 patent, and further identify that U.S. Patent No. 9,451,084 has been asserted in the district court proceedings listed above, and is the subject of IPR2020-00687. Pet. 72; Paper 5, 1.

C. The '431 Patent

The '431 patent describes a system that allows users to browse web sites and retrieve information using conversational voice commands. Ex. 1001, 1:20–23. Figure 1, reproduced below, illustrates an example:

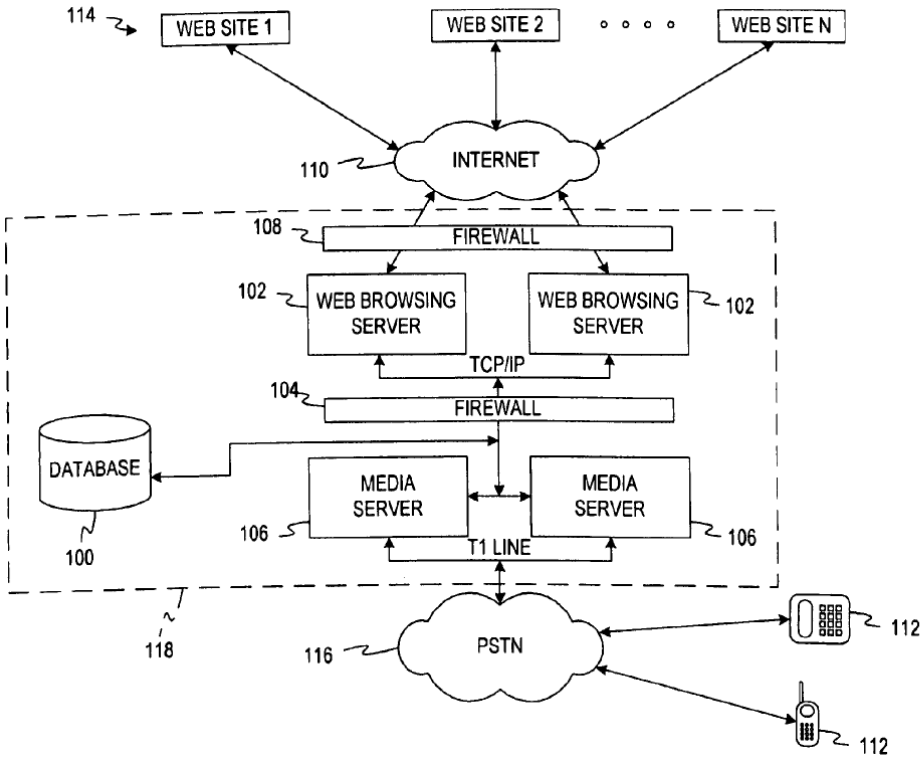

FIG. 1

Figure 1 is a block diagram of a voice browsing system. *Id.* at 4:16–17.

Figure 3, reproduced below, shows additional details of media server 106, a component shown in Figure 1:

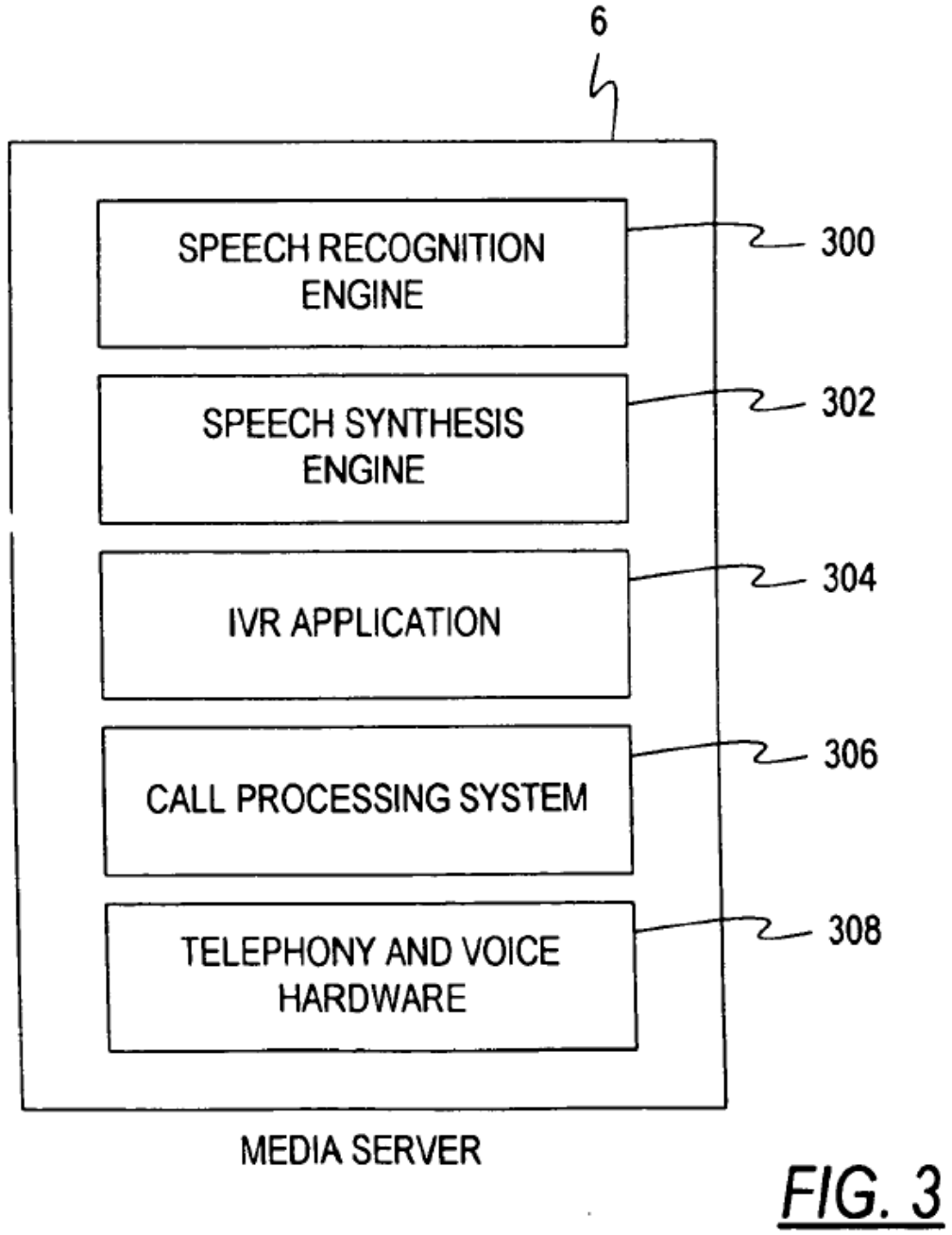

Figure 3 is a block diagram of Figure 1's media server 106. *Id.* at 4:20–21.

Media server 106 includes speech recognition engine 300, speech synthesis engine 302, Interactive Voice Response (IVR) application 304, call processing system 306, and telephony and voice hardware 308 to communicate with Public Switched Telephone Network (PTSN) 116. *Id.* at 5:62–6:1. When a user speaks into voice enable device 112 (e.g., a wireline or wireless telephone), speech recognition engine 300 converts voice commands into data messages. *Id.* at 6:4–8. Media server 106 uses results (e.g., keywords) generated by speech recognition engine 300 to retrieve web site record 200 stored in database 100 that can provide the information requested by the user. *Id.* at 6:44–50. Media server 106 selects the web site record of highest rank and transmits it to web browsing server 102 along with an identifier indicating what information is being requested. *Id.* at 6:52–56. Speech synthesis engine converts the data retrieved by web browsing server 102 into audio messages that are transmitted to voice enable device 112. *Id.* at 6:57–60.

According to the '431 patent, with its system,

> [u]sers are not required to learn a special language or command set in order to communicate with the voice browsing system of the present invention. Common and ordinary commands and phrases are all that is required for a user to operate the voice browsing system. The voice browsing system recognizes naturally spoken voice commands and is speaker-independent; it does not have to be trained to recognize the voice patterns of each individual user. Such speech recognition systems use phonemes to recognize spoken words and not predefined voice patterns.

Id. at 4:34–43.

Claim 1, reproduced below, is illustrative of the invention:[1]

> 1. A system for retrieving information from pre-selected web sites by uttering speech commands into a voice enabled device and for providing to users retrieved information in an audio form via said voice enabled device, said system comprising:
>
> [a] a computer, said computer operatively connected to the internet;
>
> [b] a voice enabled device operatively connected to said computer, said voice enabled device configured to receive speech commands from users;
>
> [c] at least one speaker-independent speech recognition device, said speaker-independent speech recognition device operatively connected to said computer and to said voice enabled device;
>
> [d] at least one speech synthesis device, said speech synthesis device operatively connected to said computer and to said voice enabled device;
>
> [e] at least one instruction set for identifying said information to be retrieved, said instruction set being associated with said computer, said instruction set comprising:
>
> a plurality of pre-selected web site addresses, each said web site address identifying a web site containing said information to be retrieved;
>
> [f] at least one recognition grammar associated with said computer, each said recognition grammar corresponding to each said instruction set and corresponding to a speech command;
>
> [g] said speech command comprising an information request selectable by the user;

[1] For consistency with the parties' arguments, we add bracketed lettering to track the lettering supplied by Petitioner. *See* Pet. 74–79 (Claims Listing Appendix).

[h] said speaker-independent speech recognition device configured to receive from users via said voice enabled device said speech command and to select the corresponding recognition grammar upon receiving said speech command;

[i] said computer configured to retrieve said instruction set corresponding to said recognition grammar selected by said speaker-independent speech recognition device;

[j] said computer further configured to access at least one of said plurality of web sites identified by said instruction set to obtain said information to be retrieved,

[k] said computer configured to first access said first web site of said plurality of web sites and, if said information to be retrieved is not found at said first web site, said computer configured to sequentially access said plurality of web sites until said information to be retrieved is found or until said plurality of web sites has been accessed;

[l] said speech synthesis device configured to produce an audio message containing any retrieved information from said pre-selected web sites, and said speech synthesis device further configured to transmit said audio message to said users via said voice enabled device.

D. Evidence

Petitioner relies on the references listed below.

Reference		Date	Exhibit No.
Ladd	US 6,269,336 B1	July 31, 2001	1004

Reference		Date	Exhibit No.
Kurosawa[2]	JP H9-311869 A	Dec. 2, 1997	1005
Goedken	US 6,393,423 B1	May 21, 2002	1006
Madnick	US 5,913,214	June 15, 1999	1007
Houser	US 5,774,859	June 30, 1998	1008
Rutledge	US 6,650,998 B1	Nov. 18, 2003	1010

Petitioner also relies on the Declaration of Loren Terveen, Ph.D. (Ex. 1003) and the Supplemental Declaration of Dr. Terveen (Ex. 1040). Patent Owner relies on the Declaration of Benedict Occhiogrosso (Ex. 2025).

E. The Instituted Grounds of Unpatentability

Claims Challenged	35 U.S.C. §	References
1–6, 9, 10, 13, 14, 18, 20, 21, 25	103(a)[3]	Ladd, Kurosawa, Goedken
7, 19, 26–30	103(a)	Ladd, Kurosawa, Goedken, Madnick
5, 6	103(a)	Ladd, Kurosawa, Goedken, Houser
9, 25	103(a)	Ladd, Kurosawa, Goedken, Rutledge

[2] We rely on the certified translation of JP H09-311869 (Ex. 1005).
[3] The Leahy-Smith America Invents Act ("AIA"), Pub. L. No. 112-29, 125 Stat. 284, 287–88 (2011), amended 35 U.S.C. § 103. Because the '431 patent was filed before March 16, 2013, the effective date of the relevant amendment, the pre-AIA version of § 103 applies.

II. ANALYSIS

A. Claim Construction

For petitions filed after November 13, 2018, we construe claims "using the same claim construction standard that would be used to construe the claim in a civil action under 35 U.S.C. 282(b), including construing the claim in accordance with the ordinary and customary meaning of such claim as understood by one of ordinary skill in the art and the prosecution history pertaining to the patent." 37 C.F.R. § 42.100(b) (2019); *see also Phillips v. AWH Corp.*, 415 F.3d 1303 (Fed. Cir. 2005) (en banc).

In the Petition, Petitioner contended that we should give the claim terms their plain and ordinary meaning, and did not identify any claim term for construction. Pet. 11.

In the Institution Decision, we made clear that the plain and ordinary meaning of "instruction set," as recited in each of the independent claims, does not require "[a] set of machine language instructions that a processor executes," rejecting Patent Owner's arguments to the contrary. Dec. 22–23; Prelim. Resp. 48.

After the pre-institution briefing was completed, but before we issued the Institution Decision, the court in the Texas case issued a claim construction ruling, construing "speaker-independent speech recognition device" to mean "speech recognition device that recognizes spoken words without adapting to individual speakers or using predefined voice patterns." Ex. 1041, 2.[4] The parties agree that this term at least requires a "speech

[4] The court in the Texas case issued other constructions pertaining to the challenged claims, but the parties do not advance them in this proceeding and we do not find it necessary to adopt them in order to resolve the parties' dispute.

recognition device that recognizes spoken words without . . . using predefined voice patterns," but disagree as to whether it should require a device that recognizes spoken words "without adapting to individual speakers." PO Resp. 21 ("The proper construction of 'speaker-independent speech recognition device' is consistent with the construction issued by the Western District of Texas, though it does not include all of that court's construction, and requires at least 'speech recognition device that recognizes spoken words without using predefined voice patterns.'"); Reply 2 ("For purposes of this IPR, Apple submits the Court's construction should be applied.").

The dispute as to whether the term should preclude adapting to individual speakers does not impact any issue in this proceeding, and Petitioner has agreed to Patent Owner's construction in this proceeding, so long as we do not resolve the dispute over adapting to individual speakers. Tr. 12:24–13:4 ("JUDGE McKONE: So you'd be happy if we essentially adopted Parus's construction with a footnote or some kind of note that we're not resolving the issue of adapting to individual speakers? MS. BAILEY: That would be fine for purposes of this IPR, Your Honor."). We adopt the parties' agreed approach. For purposes of this proceeding, "speaker-independent speech recognition device" means "speech recognition device that recognizes spoken words without using predefined voice patterns." This is consistent with the '431 patent's statement (relied on by both parties) that "[t]he voice browsing system recognizes naturally spoken voice commands and is speaker-independent; it does not have to be trained to recognize the voice patterns of each individual user. Such speech recognition systems use phonemes to recognize spoken words and not predefined voice patterns." Ex. 1001, 4:38–43; *see also* PO Resp. 21–22 (citing Ex. 1001, 4:34–43);

Reply 2–3 (citing Ex. 1001, 4:38–43). We take no position on whether the construction also should include "without adapting to individual speakers."

Based on the record before us, we do not find it necessary to provide express claim constructions for any other terms. *See Nidec Motor Corp. v. Zhongshan Broad Ocean Motor Co.*, 868 F.3d 1013, 1017 (Fed. Cir. 2017) (noting that "we need only construe terms 'that are in controversy, and only to the extent necessary to resolve the controversy'") (quoting *Vivid Techs., Inc. v. Am. Sci. & Eng'g, Inc.*, 200 F.3d 795, 803 (Fed. Cir. 1999)).

B. Obviousness of Claims 1–6, 9, 10, 13, 14, 18, 20, 21, and 25 over Ladd, Kurosawa, and Goedken

Petitioner contends that claims 1–6, 9, 10, 13, 14, 18, 20, 21, and 25 would have been obvious over Ladd, Kurosawa, and Goedken. Pet. 17–61. For the reasons given below, Petitioner has not shown obviousness by a preponderance of the evidence.

A claim is unpatentable under 35 U.S.C. § 103 (pre-AIA) if the differences between the claimed subject matter and the prior art are "such that the subject matter as a whole would have been obvious at the time the invention was made to a person having ordinary skill in the art to which said subject matter pertains." We resolve the question of obviousness on the basis of underlying factual determinations, including (1) the scope and content of the prior art; (2) any differences between the claimed subject matter and the prior art; (3) the level of skill in the art; and (4) objective evidence of nonobviousness, i.e., secondary considerations.[5] *See Graham v. John Deere Co.*, 383 U.S. 1, 17–18 (1966).

[5] The record does not include allegations or evidence of objective indicia of nonobviousness or obviousness.

1. Level of Skill in the Art

Petitioner, relying on the testimony of Dr. Terveen, contends that a person of ordinary skill in the art "would have had a Bachelor's degree in Electrical Engineering, Computer Engineering, Computer Science, or equivalent degree, with at least two years of experience in interactive voice response systems, automated information retrieval systems, or related technologies, such as web-based information retrieval systems." Pet. 6 (citing Ex. 1003 ¶ 28). Patent Owner does not contest Petitioner's proposal or offer an alternative. Also, neither party argues that the outcome of this case would differ based on our adoption of any particular definition of one of ordinary skill in the art. Petitioner's proposal is consistent with the technology described in the Specification and the cited prior art. On the complete record, we adopt Petitioner's proposed level of skill.

2. Scope and Content of the Prior Art

a) Overview of Ladd

Ladd describes a voice browser for allowing a user to access information from an information source. Ex. 1004, 1:20–25. Figure 3, reproduced below, illustrates an example:

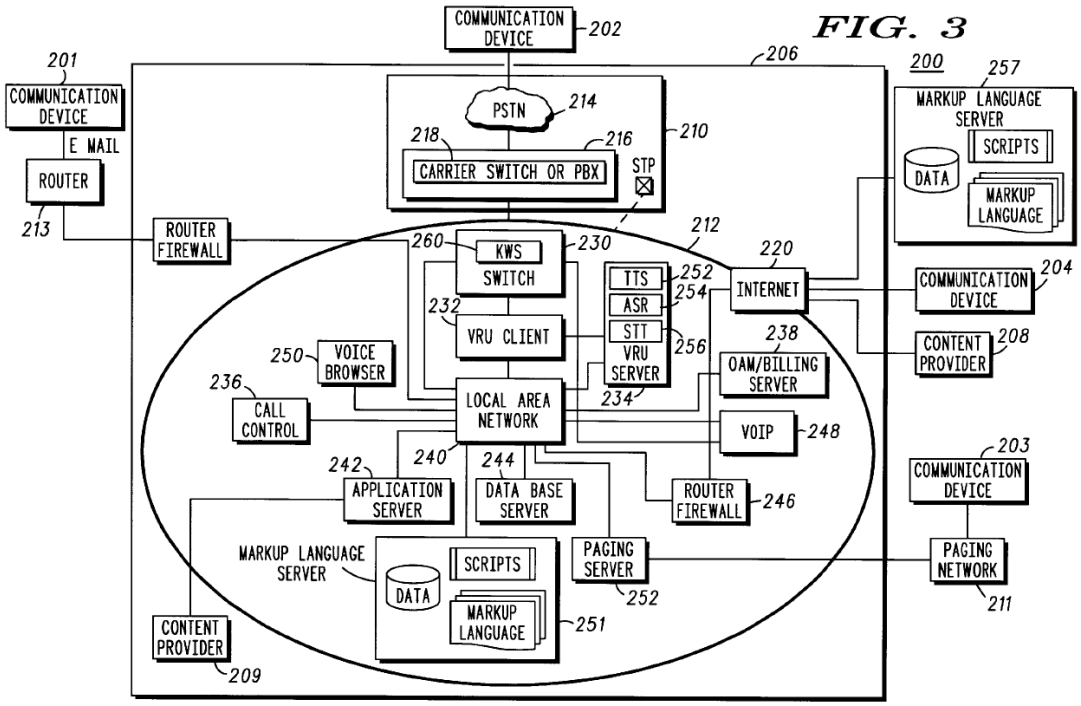

Figure 3 is a block diagram of a system that enables a user to access information. *Id.* at 4:62–64.

A user accesses electronic network 206 by dialing a telephone number from communication device 202 (e.g., a landline or wireline device, or a wireless device). *Id.* at 5:20–23, 5:29–35. Communication node 212 answers the incoming call from carrier network 216 and plays an announcement to the user. *Id.* at 6:13–17. In response to audio inputs from the user, communication node 212 retrieves information from content providers 208 and 209. *Id.* at 6:17–21. For example, voice recognition (VRU) client 232 generates pre-recorded voice announcements and messages to prompt the user to provide inputs using speech commands. *Id.* at 7:48–51. VRU client 232 receives and processes speech communications and routes them to VRU server 234, which processes the communications and compares them to a vocabulary or grammar stored in database server unit 244. *Id.* at 8:3–9, 8:55–61.

According to Ladd,

> The ASR [automatic speech recognition] unit 254 of the VRU server 234 provides speaker independent automatic speech recognition of speech inputs or communications from the user. . . . The ASR unit 254 processes the speech inputs from the user to determine whether a word or a speech pattern matches any of the grammars or vocabulary stored in the database server unit 244 or downloaded from the voice browser. When the ASR unit 254 identifies a selected speech pattern of the speech inputs, the ASR unit 254 sends an output signal to implement the specific function associated with the recognized voice pattern. The ASR unit 254 is preferably a speaker independent speech recognition software package, Model No. RecServer, available from Nuance Communications. It is contemplated that the ASR unit 254 can be any suitable speech recognition unit to detect voice communications from a user.

Id. at 9:27–44.

After receiving information from content providers 208, 209, communication node 212 provides a response to the user based on the retrieved information. *Id.* at 6:21–24. Specifically, text-to-speech (TTS) unit 252 of VRU server 234 receives textual data (e.g., web pages) from application server unit 242, processes the textual data to voice data, and provides the voice data to VRU client 232, which reads or plays the voice data to the user. *Id.* at 9:1–23.

b) Overview of Kurosawa

Kurosawa describes an Internet search server that obtains requested information from a plurality of URLs, and delivers a search report to a client. Ex. 1005, Abst. Figure 2 of Kurosawa, reproduced below, illustrates an example:

[FIG. 2]

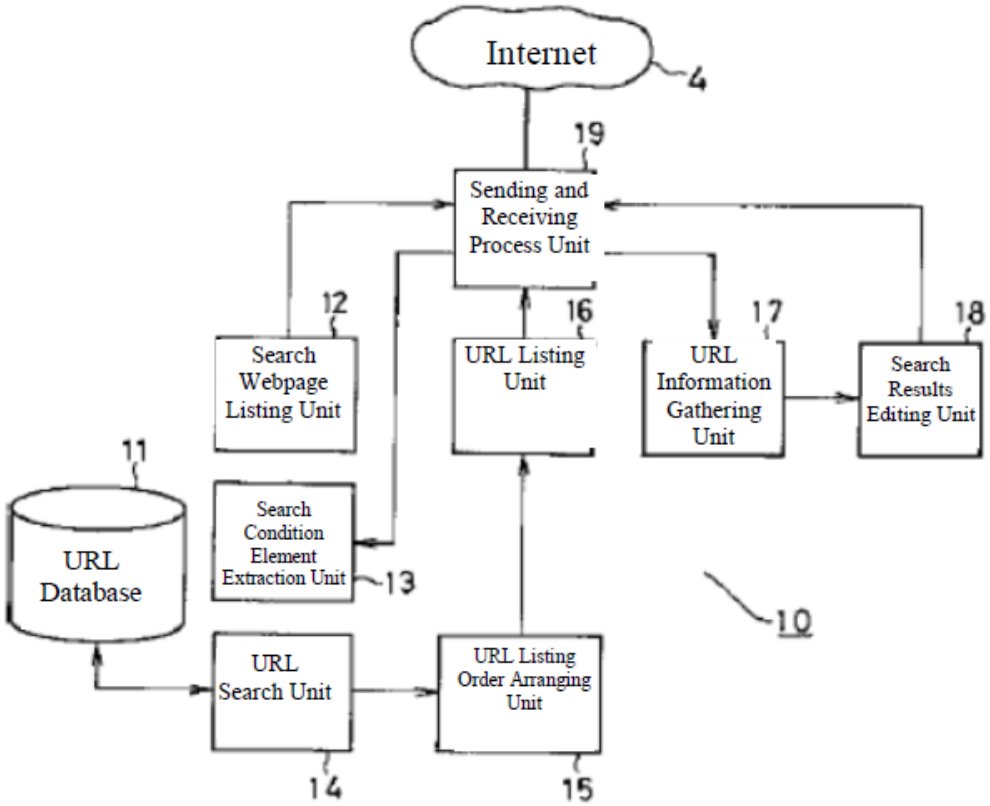

Figure 2 is a functional block diagram of an Internet search server. *Id.* ¶ 20.

Internet search server 10 includes URL database 11, which has a comparison table (URL table 22, shown in Figure 6) that compares a plurality of keywords representing search condition elements to URLs that relate to the keywords. *Id.* ¶¶ 20–21. Figure 5 is reproduced below:

[FIG. 5]

21

Keywords
Computer, personal computer, calculator, electronic calculator, microcomputer, CPU, printer ***** Tokyo, Osaka, Nagoya, Fukuoka, Shinjuku, Akihabara, Shibuya, Yokohama ***** Household electric appliances, household electronics, audio, video, AV, television, TV, radio cassette, tape recorder, ***** Mass marketer, specialty store, mail order, price *****

Figure 5 is a picture of keyword table 21 in URL database 11. *Id.* ¶ 21. According to Kurosawa, "anything that is not listed in the keyword table 21 cannot be searched for." *Id.* Figure 6 is reproduced below:

[FIG. 6]

URL List 22

URLa	http://WWW. tokyo. co. jp/sibaden
Keywords	Computer, personal computer, calculator, printer, CPU, Tokyo, Shibuya, mass marketer, mail order, price, …
URLb	http://WWW. kanto. or. jp/tokaden
Keywords	Household electronic appliances, computer, CPU, microcomputer, Tokyo, Shinjuku, mass marketer, price, …
URLc	http://WWW. osaka. co. jp/sakaden
Keywords	Computer, printer, microwave, television, household electronic appliances, Osaka, Nakanoshima, mass marketer, mail order, price, …
URLd	http://WWW. tokyo. co. jp/yasucam
Keywords	Camera, photographic camera, video camera, video, Tokyo, Shinjuku, mass marketer, price, …
	- - - - - - - -

Figure 6 is a picture of URL table 22 in URL database 11. *Id.* ¶ 21. Search server 10 regularly updates URL table 22 in URL database 11 using automatic search tools, such as Internet web crawlers. *Id.* ¶ 23.

When a client sends a search request to Internet search server 10, search condition element extraction unit 13 extracts search condition elements from the client's search request, and URL search unit 14 extracts keywords (included in the search condition elements) that match those of keyword table 21 and selects URLs (from URL table 22) having the extracted keywords listed therein. *Id.* ¶¶ 26–28. URL listing order arranging unit 15 determines a listing order for the selected URLs based on priority conditions for efficient searching. *Id.* ¶ 29. Thereafter, URL listing unit 16 sequentially lists the addresses of the respective URLs in the

determined order, and accesses the respective webpages of the URLs. *Id.* ¶ 30. URL information gathering unit 17 sequentially accumulates information from the URL pages for presentation to the client. *Id.* ¶¶ 30–31.

c) Overview of Goedken

Goedken describes a method and apparatus for facilitating information exchange, via a network, between an information requestor/searcher and one or more information custodians, who are persons that "know[] where to locate and/or ha[ve] custody of the information that interests the searcher." Ex. 1006, Abst, 1:42–44. The searcher creates an information request message and sends it to the apparatus, and the apparatus determines an appropriate custodian and sends a request message to that custodian. *Id.* The identified custodian replies to the request message with an intermediate answer message or with a reroute message. *Id.* Based on the messages, the apparatus provides a final answer message to the searcher, and may also record the answer message for subsequent retrieval. *Id.* For example, the apparatus may record portions of final answer messages developed by information custodians and store those records in a knowledge database. *Id.* at 19:43–48. "Preferably, the knowledge database 136 is populated by earlier questions and answers routed through the apparatus 10, as well as any number of preprogrammed questions and answers (e.g., an existing help line database)." *Id.* at 25:15–19.

Petitioner relies on the embodiment of Goedken relating to searching the knowledge database for previously stored answers. Pet. 41–44 (citing Ex. 1006, 25:9–26:23, Fig. 18). Figure 18 of Goedken, reproduced below, illustrates this embodiment:

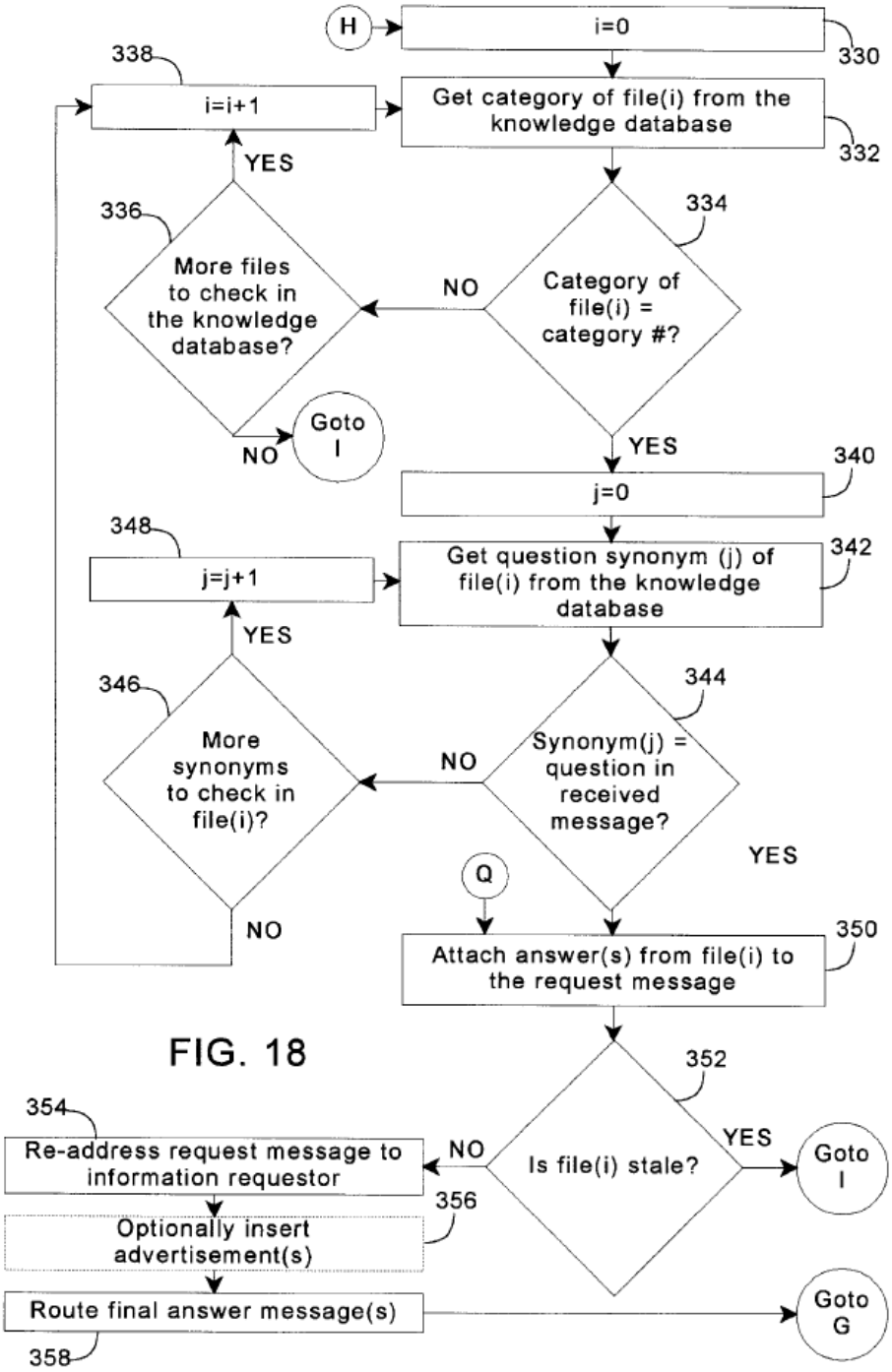

FIG. 18

Figure 18 is a flowchart of a program implementing the apparatus of Goedken's Figure 1 (an apparatus for facilitating information exchange

between an information requester and an information custodian via a network). Ex. 1006, 7:39–42, 8:13–15.

"Once the category of a received information request message 18 has been determined, the database manager 140 is activated to search the knowledge database 136 for a responsive answer." *Id.* at 25:19–22. The database manager retrieves the category associated with a first file from the knowledge database (block 332). *Id.* at 15:24–26. The database manager compares the retrieved category to the requested category (block 334) and, if there is no match, the database manager determines whether there are more files to consider (block 336). *Id.* at 25:26–32. If there are more files to consider (block 338), the category of the next file is retrieved and compared to the category of the file (blocks 334, 336). *Id.* at 25:32–35. "The database manager 140 continues to loop through blocks 332–338 until all of the categories of all of the files in the knowledge database 136 are compared to the category associated with the information request message 18 or until a match is found at block 334." *Id.* at 25:35–40.

After a file corresponding to the category has been found, Goedken's algorithm similarly loops through a set of "synonyms" for the user's question to identify whether there is a match for those synonyms in the identified file (blocks 340, 342, 344, 348, 348). *Id.* at 25:4–26:7. "If a question synonym is found at block 344, the database manager 140 passes the answer associated with that file to the message composer 122, and the message composer 122 preferably attaches the 'canned' answer from the knowledge database 136 to the information request message 18 (block 350)." *Id.* at 26:8–13.

3. Claims 1–6, 9, 10, 13, 14, 18, 20, 21, and 25, Differences Between the Claimed Subject Matter and Ladd, Kurosawa, and Goedken

a) The Parties' Contentions for Claim 1

Petitioner contends that Ladd teaches claim limitations 1[a]–1[d], 1[f]–1[j], and 1[l]; that Kurosawa teaches limitation 1[e] and aspects of limitation 1[i]; and that Goedken teaches limitation 1[k].

Regarding the preamble of claim 1, Petitioner contends that Ladd describes a system for retrieving information by uttering speech commands into a voice-enabled device and for providing retrieved information in audio form to users via the voice-enabled device. Pet. 17–18 (citing Ex. 1004, 1:22–25, 2:19–64, 3:8–23, 3:40–53, 3:58–4:3, 4:62–64, 5:30–36, 9:1–10, 9:19–21, 11:50–63, Figs. 1, 3). As to claim elements 1[a] and 1[b], Petitioner maps Ladd's communication node 212 to the "computer operatively connected to the internet" and Ladd's communication devices 201, 202, 203, 204 to "a voice enabled device operatively connected to said computer." *Id*. at 18–22 (citing Ex. 1004, 1:48–54, 1:61–64, 2:59–64, 4:62–5:11, 5:12–39, 6:50–55, 7:7–17, 7:24–32, 7:52–56, 10:34–36).

Petitioner contends that Ladd's ASR 254 within VRU server 234 is "at least one speaker-independent speech recognition device," as recited in claim element 1[c]. *Id.* at 22–23 (citing Ex. 1004, 6:65–7:7, 7:28–33, 8:19–28, 8:55–67, 9:1–3, 9:28–44). As to claim element 1[d], Petitioner contends that Ladd's TTS unit 252 within VRU server 234 is "at least one speech synthesis device." *Id.* at 23–25 (citing Ex. 1004, 3:40–57, 4:51–5:20, 5:24–29, 5:34–35, 7:28–33, 8:55–56, 9:1–23).

Regarding claim element 1[f], Petitioner, inter alia, points to Ladd's description of VRU server 234 "process[ing] the speech communications

and **compar[ing] the speech communications against a vocabulary or grammar**." *Id.* at 32–34 (quoting Ex. 1004, 8:55–61; citing *id.* at 4:36–49, 9:28–44, 10:12–17, 14:13–28, 19:12–36). As to claim element 1[g], Petitioner argues that Ladd describes a user speaking a request to access information such as news, weather, and traffic. *Id.* at 34–35 (citing Ex. 1004, 2:48–58, 4:62–5:11, 7:49–56, 10:58–66). As to claim element 1[h], Petitioner argues that Ladd describes VRU server 234 (including ASR unit 254) receiving speech commands from a communication device and determining whether a word or speech pattern matches any of the grammars or vocabulary stored in database server unit 244. *Id.* at 35–36 (citing Ex. 1004, 4:62–5:35, 6:65–7:7, 7:27-32, 8:3–28, 8:55–58, 9:1–3, 9:28–39).

As to claim element 1[l], Petitioner argues that the text TTS unit 252 converts to speech can be information retrieved from web sites. *Id.* at 47–48 (citing Ex. 1004, 4:51–5:36, 6:13–25, 7:27–33, 8:55–56, 9:1–26).

As to claim element 1[e], Petitioner contends that Kurosawa teaches this limitation. Pet. 25–32. In particular, Petitioner contends that URL table 22, shown in Kurosawa's Figure 6 (reproduced above), illustrates a plurality of web site addresses, each matching keywords in a user's search condition and identifying a web site containing information to be retrieved related to the keywords. *Id.* at 25–29 (citing Ex. 1005 ¶¶ 9, 11, 12, 21, 24, 27, 28, 37). Petitioner contends that the URLs are "pre-selected" because they are known, cross-referenced to keywords, and stored in URL database 11 before the search. *Id.* at 28 (citing Ex. 1005 ¶¶ 20–21). Petitioner contends that the "instruction set" is Kurosawa's plurality of URLs picked out based on keyword matching, and argues that this instruction set is associated with search server 10 shown in Kurosawa's Figure 1. *Id.* at 29 (citing Ex. 1005

¶ 21). Petitioner contends that Ladd's system would have been modified to include the plurality of URLs in Kurosawa's database. *Id.* at 29–30.

Regarding claim element 1[i], Petitioner contends that Ladd describes communication node 212 (including ASR unit 254) as monitoring speech commands to detect keywords (such as "weather") corresponding to information the user desires. Pet. 36–37 (citing Ex. 1004, 4:36–49, 5:37–39, 6:14–29, 7:52–56, 8:55–67, 9:35–39, 11:50–63). Petitioner pairs this teaching with Kurosawa, which Petitioner contends teaches accessing a plurality of pre-selected URLs from a database table to sequentially access websites to retrieve information desired by users. *Id.* (citing Ex. 1005 ¶¶ 9, 10, 15, 20, 21). As to claim element 1[j], Petitioner argues that Ladd teaches accessing websites based on speech commands and that Kurosawa teaches sequentially accessing URLs to gather information. *Id.* at 37–39 (citing Ex. 1004, 3:7–39, 4:37–49, 6:18–25, 6:65–7:7, 7:44–56, 11:31–36, 14:1–9; Ex. 1005 ¶¶ 9, 15, 40).

As to claim element 1[k], Petitioner contends that Kurosawa teaches sequentially accessing the URL addresses listed in URL table 22 in a priority order determined by URL listing order arranging unit 15. Pet. 39–40 (citing Ex. 1005 ¶¶ 15, 29, 35, 40). According to Petitioner,

> Goedken discloses a procedure that accesses a first file of a plurality of files for an answer to a question. If the information to be retrieved is not found at the first file (it fails to match the category or synonym), the procedure sequentially accesses the next file of the plurality of files until the information to be retrieved is found (matching both the category and synonym) or until all files have been accessed via repeated application.

Id. at 43–44 (citing Ex. 1006, 25:59–26:7; Ex. 1003 ¶¶ 119–120). Petitioner contends that, in combination, "[t]he Ladd system as further modified by Goedken sequentially accesses the plurality of preselected websites

efficiently and quickly via the Goedken procedure, which returns an answer once found or continues accessing information sources (websites, when applied to the system of Ladd modified by Kurosawa), until all websites are accessed." *Id.* at 46–47.

Patent Owner argues that Goedken does not teach sequentially accessing pre-selected web sites (PO Resp. 38–39); that Kurosawa does not teach sequentially accessing pre-selected web sites until requested information is found or all pre-selected web sites have been accessed (*id.* at 40–41); that Petitioner's obviousness combinations are based on impermissible hindsight (*id.* at 41–43); that Petitioner has not shown a motivation to combine Ladd and Kurosawa (*id.* at 43–45); that Petitioner has not shown a motivation to combine Goedken with Ladd and Kurosawa (*id.* at 46–48); and that the prior art teaches away from the proposed combination (*id.* at 48–56). Patent Owner contends that Ladd does not teach the "speaker-independent speech recognition device" of claim limitation 1[c]. *Id.* at 34–38; Sur-reply 2–18. For the reasons given below, Petitioner has not made the requisite showing as to claim limitation 1[c]; thus, it is unnecessary to resolve the remaining disputes raised by Patent Owner.

b) Petitioner has not shown that Ladd teaches the "speaker-independent speech recognition device" of claim limitation 1[c]

Claim limitation 1[c] recites "at least one *speaker-independent speech recognition device*, said speaker-independent speech recognition device operatively connected to said computer and to said voice enabled device." (emphasis added). The parties dispute whether Ladd teaches this limitation.

In the Petition, Petitioner contended that Ladd's ASR 254 is a "speaker-independent speech recognition device." Pet. 22. Petitioner (*id.* at 22–23) referred to Ladd's statement that "[t]he ASR unit 254 of the VRU server 234 provides speaker independent automatic speech recognition of speech inputs or communications from the user." Ex. 1004, 9:27–29. Petitioner also expressly quoted Ladd's description that "[t]he ASR unit 'processes the speech inputs from the user to determine whether a word or a speech matter matches any of the [stored] grammars.'" Pet. 23 (quoting Ex. 1004, 9:31–33 (addition of [stored] by Petitioner)). Petitioner also cited to disclosure in Ladd that "[t]he voice communication boards may include a voice recognition engine having a vocabulary for detecting a speech pattern (i.e., a key word or phrase)," and that "[w]hen the ASR unit 254 identifies a selected speech pattern of the speech inputs, the ASR unit 254 sends an output signal to implement the specific function associated with the recognized voice pattern." *Id.* (citing Ex. 1004, 8:19–28, 9:28–44). Thus, in the Petition, Petitioner expressly relied on Ladd's descriptions of detecting or identifying speech patterns or voice patterns when Petitioner identified the disclosure in Ladd that teaches a "speaker-independent speech recognition device." Petitioner confirmed this reliance at the oral argument. Tr. 23:21–23 ("This paragraph at column 9, beginning at line 28, was relied on in the petition for supporting the speaker independent speech recognition device."). Dr. Terveen provided expert testimony supporting the arguments in the Petition, characterizing Ladd in the same manner, and citing to essentially the same disclosure in Ladd. Ex. 1003 ¶¶ 90–91 (citing Ex. 1004, 8:19–28, 9:28–44). Petitioner appears to still rely on Ladd's statements of detecting or identifying speech or voice patterns. Tr. 22:4 ("We're still relying on the same disclosure that is in Ladd."), 23:24–24:3

("JUDGE McKONE: Are you withdrawing your reliance on this paragraph or portions of this paragraph? MS. BAILEY: No, Your Honor. I'm not withdrawing it at all. In fact, I think it does still continue to support our position.").

As noted above, after the Petition was filed and the rest of the pre-institution briefing was completed, the court in the Texas case issued a claim construction order construing "speaker-independent speech recognition device" to require, inter alia, a "speech recognition device that recognizes spoken words without . . . using predefined voice patterns." Ex. 1041, 2. In the Reply, Petitioner advocated for the District Court's construction. Reply 14–15. As explained above, we accept the parties' agreement, and the District Court's ruling, that "speaker-independent speech recognition device" requires a speech recognition device that recognizes spoken words without using predefined voice patterns.

Against the backdrop of this construction, Patent Owner argues that, despite Ladd's statement that ASR 254 "provides speaker independent automatic speech recognition of speech inputs," Ex. 1004, 9:27–29, Ladd's ASR "is expressly reliant on recognizing a voice pattern, something that is expressly disclaimed from the '431 patent." PO Resp. 26–27, 35–36. Patent Owner relies on the statements (quoted above) in Ladd cited in the Petition to show that ASR 254 performs speech recognition by recognizing pre-defined voice patterns. *Id.* at 36–38 (citing Ex. 1004, 8:19–28, 9:35–40). According to Patent Owner, "[a]lthough, Ladd uses the term 'speaker independent' twice in its disclosure, it expressly teaches away from the type of speech recognition required by the '431 Patent." *Id.* at 37.

In the Reply, Petitioner acknowledges that "Ladd includes several teachings of determining whether a speech (or voice) pattern matches stored

grammars or vocabulary and defines the speech/voice pattern as a key word or phrase." Reply 3 (citing Ex. 1004, 4:23–25, 8:23–25, 9:32–39). Nevertheless, Petitioner argues, the voice patterns in Ladd are different from those excluded by the '431 patent, both because Ladd's voice patterns are used in a different step of the speech recognition process and because they correspond to keywords, rather than spectral energy. *Id.* at 3–4.

As to the steps in the speech recognition process, Petitioner argues, citing to its cross-examination of Mr. Occhiogrosso, "[s]peech recognition that determines the content of the spoken word is broadly divided into two steps: (1) converting the spoken utterance into text, i.e., words; and (2) determining the content of the recognized words, e.g., determining if words are keywords that issue a command." *Id.* at 5 (citing Ex. 1039, 51:14–52:22); *see also id.* at 6 ("Thus, per Mr. Occhiogrosso, speech recognition as described in the '431 Patent **first** recognizes a word by converting speech into text, and **then** compares the word to a recognition grammar to identify keywords." (citing Ex. 1039, 38:5–39:2, 52:19–22)). In the first step, Petitioner argues, a speech recognition device can convert a user's spoken words into text using various techniques, including those that do and do not analyze voice patterns. *Id.* at 4–6 (citing Ex. 1039, 11:9–13, 15:4–20, 24:17–25:6, 33:6–20, 40:10–22, 43:16–44:7, 50:21–51:8, 51:14–52:22, 54:6–55:7). After speech is converted to text, the text can be compared to a recognition grammar in a second step to determine the content of the text. *Id.* at 4 (citing Ex. 1039, 66:5–67:17).

Petitioner argues that, "[p]er Parus, the '431 Patent excludes using voice patterns to convert speech into text during the *first* step of speech recognition, i.e., when converting the spoken utterance into text." Reply 7 (citing Ex. 1039, 29:14–23). In contrast, Petitioner argues, "Ladd's

speech/voice pattern is determined at the second step of identifying the instructed command in the Ladd IVR system (i.e., identifying a key word or phrase) and *subsequent* to converting the speech into text." *Id.* at 4; *see also id.* at 7 ("In contrast, Ladd teaches the automatic speech recognition (ASR) unit 254 first recognizes the words from the user's speech input and then performs the second step of determining whether the speech inputs match any key word or phrase via comparison to a stored grammar or vocabulary." (citing Ex. 1004, 8:23–25, 9:31–36; Ex. 1040 ¶¶ 4–8)), 11 ("Per Mr. Occhiogrosso, using a vocabulary (or grammar) to detect speech occurs after the spoken words are converted into text." (citing Ex. 1039, 49:9–19, 50:17–51:6)).

We note that Petitioner's position is not entirely clear. On one hand, Petitioner appears to argue that the speech recognition process is divided into two steps, first converting speech into text, e.g., using phonemes, and second determining the content of the word, e.g., using a recognition grammar. Reply 4. On the other hand, Petitioner also appears to argue that the speech recognition process only corresponds to the first step of converting an utterance into text, while the second step of determining the content of the recognized speech (e.g., matching the text to vocabularies or grammars) occurs after speech recognition has completed. *Id.* at 7–8.[6]

Neither argument is persuasive. If Petitioner is arguing that only the first step is speech recognition, the Petition expressly identifies Ladd's disclosure of identifying or matching voice patterns as part of that first step of speech recognition claimed in limitation 1[c]. Pet. 22–23; Ex. 1003 ¶ 90.

[6] For its part, Patent Owner disagrees that speech recognition requires two steps, and accuses Petitioner of attempting to conflate speech recognition and natural language processing. Sur-reply 10–15.

Petitioner's characterization, in the Reply, of this disclosure in Ladd as corresponding to an unclaimed second step not part of speech recognition would be an impermissible new argument presented for the first time in the Reply. As explained in the Board's Trial Practice Guide, Petitioner's change in direction exceeds the proper scope of a reply:

> Generally, a reply or sur-reply may only respond to arguments raised in the preceding brief. 37 C.F.R. § 42.23, except as noted above. "Respond," in the context of 37 C.F.R. § 42.23(b), does not mean proceed in a new direction with a new approach as compared to the positions taken in a prior filing. While replies and sur-replies can help crystalize issues for decision, a reply or sur-reply that raises a new issue or belatedly presents evidence may not be considered. The Board is not required to attempt to sort proper from improper portions of the reply or sur-reply.

Patent Trial and Appeal Board Consolidated Trial Practice Guide 74 (November 2019) ("TPG").[7] If Petitioner is arguing that Ladd's description of voice patterns and speech patterns is not describing speaker-independent speech recognition, then Petitioner's Reply does not simply respond to the Patent Owner Response or attempt to crystalize the issues in dispute. Rather, the Petition expressly relied on certain disclosure in Ladd to show the functionality claimed in limitation 1[c], while the Reply attempts to re-cast that same disclosure as describing functionality separate from that of limitation 1[c]. This would be a new theory.

If it is Petitioner's theory that "speaker-independent speech recognition" is a two-step process and the District Court's restriction on using predefined voice patterns only applies to the first step, Petitioner has not supported this attempt to narrowly construe (indeed, redraft) the District

[7] Available at https://www.uspto.gov/TrialPracticeGuideConsolidated.

Court's construction. As noted above, at Petitioner's insistence, we construe "speaker-independent speech recognition device" to mean "speech recognition device that recognizes spoken words without using predefined voice patterns." On its face, this construction precludes a speech recognition device that recognizes spoken words using predefined voice patterns at any step, not just Petitioner's newly advocated first step.

The parties appear to agree (PO Resp. 21–22 (citing Ex. 1001, 4:34–43); Reply 2–3 (citing Ex. 1001, 4:38–43)) that the basis for the District Court's construction is the '431 patent's description that "[t]he voice browsing system recognizes naturally spoken voice commands and is speaker-independent; it does not have to be trained to recognize the voice patterns of each individual user. Such speech recognition systems use phonemes to recognize spoken words and not predefined voice patterns." Ex. 1001, 4:38–43. This disclosure does not break speech recognition into multiple steps or suggest that the restriction on using predefined voice patterns only applies to a part of the process of speech recognition. The process of recognizing speech, according to the '431 patent, uses phonemes, not predefined voice patterns.

The cross-examination testimony of Mr. Occhiogrosso on which Petitioner relies explains that the '431 patent's descriptions of matching keywords to grammar or vocabulary happen after its speech recognition based on phonemes. *See, e.g.*, Ex. 1039, 5:4–20, 38:5–39:2, 51:14–52:22. He does not testify that the '431 patent defines "speaker-independent speech recognition device" as the two-step process Petitioner now proposes.

Thus, we are not persuaded that the District Court's construction of "speaker-independent speech recognition" should be construed further as a two-step process, only the first step of which includes a restriction on using

predefined voice patterns. Ladd describes identifying selected speech patterns and recognized voice patterns as part of its speaker-independent automatic speech recognition. This is contrary to claim limitation 1[c], as construed.

As noted above, Petitioner also contends that the "voice patterns" described in Ladd are different in kind from those discussed (and distinguished) in the '431 patent. Reply 8–12. Relying on Dr. Terveen's testimony and Ladd's disclosure, Petitioner argues that the "voice patterns" described in Ladd are key words or phrases. *Id.* at 8–9 (citing Ex. 1040 ¶¶ 11–14), 9–10 (citing Ex. 1004, 4:15–18, 6:50–57, 8:58–61, 9:28–44, 10:3–20, 17:17–27, 23:40–44). Petitioner further argues that Mr. Occhiogrosso testified in cross-examination that a voice pattern is "a word or utterance, and its spectral energy . . . as a function of time." *Id.* at 3 (citing Ex. 1039, 25:12–17, 25:22–26:13, 30:10–16).

According to Petitioner, Patent Owner has not established that Ladd's voice patterns are the same as what Mr. Occhiogrosso testified is the type of voice pattern excluded by the '431 patent. *Id.* at 10–12. Rather, Petitioner argues, Ladd's keyword voice patterns would be used in the second step of the two steps discussed above, while voice patterns of the '431 patent, represented as spectral energy, would be used in the first step. *Id.* at 11 ("Because the 'voice patterns' defined by Parus are analyzed to convert words into text, and because Ladd's speech patterns are detected with a vocabular[y]/grammar, Ladd's speech patterns cannot be the same as the excluded 'voice patterns.'"); *see also id.* at 7 ("Per Parus, the '431 Patent excludes using voice patterns to convert speech into text during the *first* step of speech recognition, i.e., when converting the spoken utterance into text. In contrast, Ladd teaches the automatic speech recognition (ASR) unit 254

first recognizes the words from the user's speech input and then performs the second step of determining whether the speech inputs match any key word or phrase via comparison to a stored grammar or vocabulary." (citations omitted)). Thus, Petitioner argues, "because Ladd's determined 'voice patterns' are materially different than the 'predefined voice patterns' Parus contends are excluded by its claim construction, Ladd teaches Claim 1(c)." *Id.* at 11–12.

Patent Owner argues that "voice pattern" should be given its ordinary meaning and that no additional construction is necessary. Sur-reply 4–6.

We are not persuaded by Petitioner's arguments. As explained above, Petitioner has not shown that the '431 patent distinguishes between predefined voice patterns used in a first step of voice recognition and voice patterns used in a second step. Nor does Petitioner point to any persuasive support in the '431 patent to exclude certain predefined voice patterns (e.g., keywords) from the District Court's construction.

Patent Owner has introduced persuasive evidence that Ladd's speaker-independent automatic speech recognition uses predefined voice patterns under the District Court's construction of "speaker-independent speech recognition device." PO Resp. 34–38; Sur-reply 6–8. Petitioner has not convinced us to narrow the District Court's construction or that Ladd's express description of selected speech patterns and recognized voice patterns (Ex. 1004, 9:35–38) do not correspond to the predefined voice patterns excluded by the District Court's construction. Accordingly, we find that Ladd's speaker-independent automatic speech recognition uses predefined voice patterns, contrary to claim limitation 1[c], as we construe it. In any case, Petitioner has not met its burden to show that Ladd performs speaker-independent speech recognition without using predefined voice patterns.

Moreover, even if we were to determine that Ladd's descriptions of voice patterns pertained to a second step apart from its description of speaker-independent automatic speech recognition, Petitioner still cannot prevail because Petitioner has not shown that Ladd's speaker-independent automatic speech recognition (assuming it corresponds to the newly alleged first step) is performed without using predefined voice patterns. If we accept Petitioner's argument that the statements in Ladd discussing speech or voice patterns correspond to a second step of speech recognition (or a second step that happens after speech recognition is completed), Petitioner's cited support in Ladd for limitation 1[c] would be:

> The ASR unit 254 of the VRU server 234 provides speaker independent automatic speech recognition of speech inputs or communications from the user. . . . The ASR unit 254 is preferably a speaker independent speech recognition software package, Model No. RecServer, available from Nuance Communications. It is contemplated that the ASR unit 254 can be any suitable speech recognition unit to detect voice communications from a user.

Ex. 1004, 9:28–32, 9:39–44. Here, Ladd does not describe how it recognizes speech. Petitioner acknowledged this at the oral argument. Tr. 47:20–24 ("I think what's going on at this discussion regarding the detection unit in Ladd is speech recognition is so well-known that the patent drafter simply said we're going to look at audio inputs and compare to the recognition grammar and didn't describe all the intermediate steps."). Mr. Occhiogrosso testified on cross-examination that there are a variety of methods in the art for recognizing words spoken by a user, including some that use voice patterns and some (e.g., artificial intelligence or using phonemes) that do not. Ex. 1039, 54:6–55:7. Petitioner confirmed at the oral hearing that this is true:

> MS. BAILEY: . . . During Mr. Occhiogrosso's deposition, we started talking about speech recognition algorithms, and he explained that voice patterns and analyzing the voice patterns is just one class of speech recognition algorithms. He talked about voice patterns. He talked about phonemes. But he said there's all kinds of speech recognition algorithms that can be used to recognize the speech and convert it into text. For example, you can --
>
> JUDGE McKONE: Do you agree with that statement? That's not something you're challenging, is it?
>
> MS. BAILEY: We're not challenging that there are different types of speech recognition algorithms.
>
> JUDGE McKONE: Okay. Some that use voice patterns and some that do not.
>
> MS. BAILEY: That is correct. And there are others beyond that. He talked about during his deposition that you could use AI, you could use neural networks, statistical analyses. There's probably even more but those are the ones that he mentioned during his deposition.

Tr. 15:20–16:12. Dr. Terveen testifies that "[t]here are a number of methods by which a system may perform this first step of converting the spoken words into text, but *Ladd is not specific on how it requires step one to occur*." Ex. 1040 ¶ 3 (emphasis added). Thus, based on the testimony of both experts, simply saying that a device uses "speaker independent automatic speech recognition," as Ladd does (Ex. 1004, 9:28–30), does not establish that the device performs that recognition "without using predefined voice patterns," as the claim construction for limitation 1[c] requires.

Petitioner does not introduce persuasive evidence to fill the gap between Ladd's silence on how it performs "speaker independent automatic speech recognition" and what Petitioner would need to establish performance of speech recognition without using predefined voice patterns. The argument and evidence submitted with the Reply does not add to Ladd's

disclosure materially. The thrust of Petitioner's Reply arguments is that Patent Owner failed to show an equivalency between the '431 patent's "voice patterns" and Ladd's "speech" and "voice" patterns. Reply 8–12. However, Petitioner bears the burden to show that Ladd performs recognition without using predefined speech patterns; Patent Owner bears no burden to show that Ladd performs recognition using predefined speech patterns. *See* 35 U.S.C. § 316(e) ("In an inter partes review instituted under this chapter, the petitioner shall have the burden of proving a proposition of unpatentability by a preponderance of the evidence."); *Dynamic Drinkware, LLC v. Nat'l Graphics, Inc.*, 800 F.3d 1375, 1378 (Fed. Cir. 2015).

Petitioner's Reply and Dr. Terveen's testimony do not show how Ladd's ASR 254 performs its speaker independent automatic speech recognition, and specifically do not show that it performs recognition without using predefined speech patterns. Reply 3–12; Ex. 1003 ¶ 90; Ex. 1040 ¶¶ 2–25. At the oral argument, Petitioner was unable to point to affirmative evidence supporting its position:

> JUDGE McKONE: Now, does Ladd have any specific disclosure that this speaker independent automatic speaker recognition is happening without the use of voice patterns?
>
> MS. BAILEY: Well, let me – that's actually where I was about to go. So --
>
> JUDGE McKONE: I have read in your brief that you are saying – you're probably going to tell me that the parts you highlighted in blue do not pertain to the speech recognition. And I'd be happy to hear about that in a moment. But is there anything affirmative you want to point me to that shows that this ASR unit is performing speaker independent automatic speech recognition without the use of voice patterns?
>
> MS. BAILEY: There is nothing affirmative that says without the use of voice patterns, using Parus's definition of the spectral

> energy as a function of time. Ladd doesn't mention a voice pattern that is a spectral energy as a function of time. It has no disclosure to that respect. So Ladd doesn't have anything that says the speaker independent speech recognition device does not identify the -- or analyze the spectral energy of the utterance as a function of time.

Tr. 19:24–20:18.

As noted above, both the '431 patent and Ladd mention "Nuance" software. Ex. 1001, 6:16–21; Ex. 1004, 9:38–41. Ladd's mention of Nuance software does not provide persuasive evidence that Ladd's ASR 254 performs speaker-independent speech recognition without using predefined voice patterns. Dr. Terveen testifies that

> Ladd describes using a commercially-available product from a company called Nuance to transform speech into text. This is the same commercially-available product from Nuance that the '431 and '084 Patents describe, further indicating to me that Ladd . . . teaches a speaker independent speech recognition device substantially similar to the speaker independent speech recognition device described and claimed in the '431 Patent.

Ex. 1040 ¶ 9 (citing Ex. 1001, 6:4–24; Ex. 1004, 8:23–28). Dr. Terveen's testimony does not state the basis for his conclusion that Ladd and the '431 patent describe the same Nuance software, rather than different software made by the same company,[8] and we see no evidence to support that testimony. *See* 37 C.F.R. § 42.65(a) ("Expert testimony that does not disclose the underlying facts or data on which the opinion is based is entitled to little or no weight."). In any case, Petitioner admitted at the oral argument

[8] The '431 patent simply states that "[a] preferred speech recognition engine is developed by Nuance Communications," without further identifying the software. Ex. 1001, 6:16–19; *see also id.* at 18:35–37 (same). Ladd states that "[t]he voice recognition engine is preferably a RecServer software package, available from Nuance Communications." Ex. 1004, 8:25–28.

that the record does not include any evidence to support Dr. Terveen's opinion on the Naunce software. Tr. 46:10–14 ("JUDGE McKONE: . . . Do we have any evidence in the record as to what this Nuance software is and whether or not it is the same between Ladd and the challenged patents? MS. BAILEY: No, we do not, Your Honor.").

In light of both experts' testimony that "speaker-independent speech recognition" can be performed in a variety of ways (including using predefined voice patterns), and Petitioner's failure to offer evidence of how Ladd's ASR 254 operates, we find that, at most, Ladd is silent as to whether its "speaker independent automatic speech recognition" is performed "without using predefined voice patterns." This is insufficient for Petitioner to meet its burden of proof.[9]

At the oral hearing, Petitioner attempted to introduce another theory, specifically, that the disclosure in Ladd that Petitioner relied upon for

---

[9] *AC Technologies S.A. v. Amazon.com, Inc.*, 912 F.3d 1358 (Fed. Cir. 2019), and *Sud-Chemie, Inc. v. Multisorb Techs., Inc.*, 554 F.3d 1001 (Fed. Cir. 2009) do not lead to a different outcome. In *AC Technologies*, the Federal Circuit determined that substantial evidence supported a Board finding that prior art taught copying that was independent of an access to a computer unit, despite the lack of an express disclosure of this "negative limitation," based on inferences the Board drew from the prior art's disclosure and expert testimony explaining the prior art. 912 F.3d at 1366–67. In *Sud-Chemie*, the Federal Circuit affirmed a district court finding that prior art disclosed an "uncoated" film based on description in the prior art that did not describe the film as coated and did not suggest the necessity of coatings. 554 F.3d at 1004–05. In this proceeding, Petitioner does not need to show that Ladd affirmatively states a negative limitation. However, neither Petitioner nor its expert witness provide any persuasive evidence showing why we should infer from Ladd's silence that its ASR 254 performs speaker-independent speech recognition in a manner consistent with claim limitation 1[c].

claim 5 supports its allegations for claim limitation 1[c]. Tr. 21:14–22:15 (citing Ex. 1004, 14:17–42). Petitioner admits that it did not raise this argument either in its Petition or Reply. *Id.* at 44:24–45:4 ("JUDGE McKONE: . . . the evidence you point to for claim 5 that you . . . would now like to point to for claim 1 in Ladd, was that raised at all in the reply for claim 1? MS. BAILEY: It was raised with respect to claims 5 and 6. Referring to claim 1, it was not raised."). This argument is waived. *See Dell Inc. v. Acceleron, LLC*, 884 F.3d 1364, 1369 (Fed. Cir. 2018) (The "Board was obligated to dismiss [the petitioner's] untimely argument . . . raised for the first time during oral argument.").

In sum, the evidence presented in the Petition shows that Ladd teaches speaker-independent speech recognition *using* predefined voice patterns, contrary to the requirement of claim limitation 1[c]. We are not persuaded by Petitioner's new reply arguments, which attempt, unsuccessfully, to redraft the District Court's construction of limitation 1[c]. Nevertheless, those arguments would not be persuasive because Petitioner has not introduced evidence sufficient to show that Ladd teaches speaker-independent speech recognition without using predefined voice patterns if claim limitation 1[c] is construed to be a two-step process. Petitioner has not shown, by a preponderance of the evidence, that Ladd, Kurosawa, and Goedken teach "at least one speaker-independent speech recognition device, said speaker-independent speech recognition device operatively connected to said computer and to said voice enabled device," as recited in claim limitation 1[c]. Thus, Petitioner has not shown, by a preponderance of the evidence, that Ladd, Kurosawa, and Goedken teach all limitations of claim 1.

c) Claims 2–6, 9, 10, 13, 14, 18, 20, 21, and 25

For independent claim 18, Petitioner relies primarily on its showing for claim 1. Pet. 58–61. Claim limitation 18[b] recites, inter alia, "said computer further being operatively connected to at least one speaker-independent speech recognition engine." Petitioner incorporates its allegations for claim limitation 1[c] for claim limitation 18[b]. *Id.* at 58. The Reply does not address claim 18 separately. As explained above, Petitioner has not shown that Ladd, Kurosawa, and Goedken teach claim limitation 1[c]. For the same reasons, they do not teach limitation 18[b]. Thus, Petitioner has not shown, by a preponderance of the evidence, that Ladd, Kurosawa, and Goedken teach all limitations of claim 18.

Claims 2–6, 9, 10, 13, and 14 depend from claim 1. Claims 20, 21, and 25 depend from claim 18. Petitioner's allegations as to these dependent claims do not cure the defects with respect to its presentation for independent claims 1 and 18. Pet. 48–58, 61. Thus, Petitioner has not shown, by a preponderance of the evidence, that Ladd, Kurosawa, and Goedken teach all limitations of claims 2–6, 9, 10, 13, 14, 20, 21, and 25.

4. Conclusion

As explained above, Petitioner has not shown that Ladd, Kurosawa, and Goedken teach all limitations of claims 1–6, 9, 10, 13, 14, 18, 20, 21, and 25. Neither party argues or introduces evidence of objective indicia of nonobviousness or obviousness. In sum, upon consideration of all the evidence, we conclude that Petitioner has not proved by a preponderance of the evidence that claims 1–6, 9, 10, 13, 14, 18, 20, 21, and 25 would have been obvious over Ladd, Kurosawa, and Goedken.

C. Obviousness of Claims 7, 19, and 26–30 over Ladd, Kurosawa, Goedken, and Madnick; Obviousness of Claims 5 and 6 over Ladd, Kurosawa, Goedken, and Houser; and Obviousness of Claims 9 and 25 over Ladd, Kurosawa, Goedken, and Rutledge

Petitioner contends that claims 7, 19, and 26–30 would have been obvious over Ladd, Kurosawa, Goedken, and Madnick. Pet. 62–67. Petitioner adds Madnick to show the limitations of claims 7, 19, and 26 related to a "content descriptor" associated with each said web site address, and not to show additional disclosure for claim limitation 1[c]. *Id.* at 62–66. As to independent claim 26 in particular, Petitioner incorporates by reference its allegations for claim limitation 1[c] as to claim limitation 26[b], which recites "at least one speaker-independent speech recognition engine." *Id.* at 64. Claims 27–30 depend from claim 26. Petitioner incorporates by reference its arguments for claims 2–4 (which depend from claim 1) as to these claims. *Id.* at 66–67. Petitioner's allegations as to these claims do not cure the defects with respect to its presentation for claim 1. For the reasons given for claim 1, Petitioner has not shown that Ladd, Kurosawa, Goedken, and Madnick teach all limitations of claims 7, 19, and 26–30.

Petitioner proposes additional grounds for claims 5 and 6 (which depend from claim 1) adding Houser, and for claims 9 and 25 (which depend from claims 1 and 18, respectively) adding Rutledge. Pet. 27–71. Petitioner's allegations as to these claims do not cure the defects with respect to its presentations for claims 1 and 18.

For the reasons given for claim 1, Petitioner has not shown that Ladd, Kurosawa, Goedken, and Houser teach all limitations of claims 5 and 6 or that Ladd, Kurosawa, Goedken, and Rutledge teach all limitations of claims 9 and 25.

Neither party argues or introduces evidence of objective indicia of nonobviousness or obviousness for claims 5–7, 9, 19, and 25–30.

In sum, upon consideration of all the evidence, we conclude that Petitioner has not proved by a preponderance of the evidence that claims 5–7, 9, 19, and 25–30 would have been obvious.

III. PATENT OWNER'S MOTION TO EXCLUDE

Patent Owner moves to exclude paragraphs 2–25 of Dr. Terveen's Supplemental Declaration (Ex. 1040) for three reasons. First, Patent Owner argues that this testimony does not respond to arguments raised in the Patent Owner Response. Paper 29, 2–5. Second, Patent Owner argues that this testimony is an unauthorized and late submission of supplemental information under 37 C.F.R. § 42.123(b). *Id.* at 6–9. Third, Patent Owner argues that this testimony was improperly incorporated by reference into the Reply. *Id.* at 9.

Petitioner argues that Patent Owner's bases for moving to exclude are not proper and that, to challenge the scope of Dr. Terveen's declaration, Patent Owner should have filed a motion to strike. Paper 30, 1, 4–6.

A motion to exclude should be directed to the admissibility of evidence. *See* 37 C.F.R. § 42.64; TPG 79 ("A motion to exclude must explain why the evidence is not admissible (e.g., relevance or hearsay) but may not be used to challenge the sufficiency of the evidence to prove a particular fact."). According to the Trial Practice Guide, a motion to exclude is not a vehicle to "address arguments or evidence that a party believes exceeds the proper scope of reply or sur-reply." TPG 79. Rather, "[i]f a party believes that a brief filed by the opposing party raises new issues, is accompanied by belatedly presented evidence, or otherwise exceeds the

proper scope of reply or sur-reply, it may request authorization to file a motion to strike." *Id.* at 80. Patent Owner did not file a motion to strike.

Patent Owner's Motion to Exclude does not address the admissibility of Dr. Terveen's testimony. Rather, it argues that the testimony exceeds the proper scope of reply evidence, because it does not respond to the Patent Owner Response, because Petitioner did not follow our rules in seeking to submit supplemental information, or because Petitioner attempts to incorporate material by reference improperly. Paper 29. Thus, we agree with Petitioner that Patent Owner's Motion to Exclude does not state a proper basis for excluding evidence and, therefore, we deny the motion for that reason.

IV. CONCLUSION[10]

Petitioner has not shown by a preponderance of the evidence that claims 1–7, 9, 10, 13, 14, 18–21, and 25–30 would have been obvious.

[10] Should Patent Owner wish to pursue amendment of the challenged claims in a reissue or reexamination proceeding subsequent to the issuance of this decision, we draw Patent Owner's attention to the April 2019 *Notice Regarding Options for Amendments by Patent Owner Through Reissue or Reexamination During a Pending AIA Trial Proceeding*. *See* 84 Fed. Reg. 16,654 (Apr. 22, 2019). If Patent Owner chooses to file a reissue application or a request for reexamination of the challenged patent, we remind Patent Owner of its continuing obligation to notify the Board of any such related matters in updated mandatory notices. *See* 37 C.F.R. § 42.8(a)(3), (b)(2).

In summary:

Claims	35 U.S.C. §	Reference(s)/ Basis	Claims Shown Unpatentable	Claims Not shown Unpatentable
1–6, 9, 10, 13, 14, 18, 20, 21, 25	103	Ladd, Kurosawa, Goedken		1–6, 9, 10, 13, 14, 18, 20, 21, 25
7, 19, 26–30	103	Ladd, Kurosawa, Goedken, Madnick		7, 19, 26–30
5, 6	103	Ladd, Kurosawa, Goedken, Houser		5, 6
9, 25	103	Ladd, Kurosawa, Goedken, Rutledge		9, 25
Overall Outcome				1–7, 9, 10, 13, 14, 18–21, 25–30

V. ORDER

In consideration of the foregoing, it is hereby:

ORDERED, based on a preponderance of the evidence, that claims 1–7, 9, 10, 13, 14, 18–21, and 25–30 have not been shown to be unpatentable;

FURTHER ORDERED that Patent Owner's Motion to Exclude Exhibit 1040 is denied; and

FURTHER ORDERED, because this is a final written decision, the parties to this proceeding seeking judicial review of our Decision must comply with the notice and service requirements of 37 C.F.R. § 90.2.

FOR PETITIONER:

Jennifer C. Bailey
Adam P. Seitz
ERISE IP, P.A.
jennifer.bailey@eriseip.com
adam.seitz@eriseip.com

FOR PATENT OWNER:

Michael J. McNamara
Michael T. Renaud
William A. Meunier
MINTZ, LEVIN, COHN, FERRIS, GLOVSKY AND
POPEO, P.C.
mmcnamara@mintz.com
mtrenaud@mintz.com
wameunier@mintz.com