US007488056B2

(12) **United States Patent**
Torgerson et al.

(10) **Patent No.: US 7,488,056 B2**
(45) **Date of Patent: Feb. 10, 2009**

(54) **FLUID EJECTION DEVICE**

(75) Inventors: **Joseph M Torgerson**, Philomath, OR (US); **Simon Dodd**, Cambridge, MA (US); **Michael D. Miller**, Philomath, OR (US); **Trudy L. Benjamin**, Portland, OR (US); **Kevin Bruce**, Corvallis, OR (US)

(73) Assignee: **Hewlett--Packard Development Company, L.P.**, Houston, TX (US)

(*) Notice: Subject to any disclaimer, the term of this patent is extended or adjusted under 35 U.S.C. 154(b) by 438 days.

(21) Appl. No.: **10/827,030**

(22) Filed: **Apr. 19, 2004**

(65) **Prior Publication Data**

US 2005/0231562 A1 Oct. 20, 2005

(51) **Int. Cl.**
B41J 2/05 (2006.01)

(52) **U.S. Cl.** **347/58**; 347/61; 347/62; 347/59; 347/65

(58) **Field of Classification Search** 347/19, 347/65, 85, 58, 61, 62, 59
See application file for complete search history.

(56) **References Cited**

U.S. PATENT DOCUMENTS

5,367,324 A 11/1994 Abe et al.
5,400,063 A 3/1995 Kappel
5,648,804 A 7/1997 Keefe et al.
5,808,640 A * 9/1998 Bhaskar et al. 347/58
6,318,828 B1 11/2001 Barbour et al.
6,398,347 B1 6/2002 Torgerson et al.
6,422,676 B1 7/2002 Torgerson et al.
6,491,377 B1 * 12/2002 Cleland et al. 347/50
6,536,877 B2 3/2003 Miyamoto et al.
6,543,883 B1 4/2003 Dodd et al.
2001/0008411 A1 * 7/2001 Maze et al. 347/64
2002/0093551 A1 * 7/2002 Axtell et al. 347/59
2002/0109755 A1 * 8/2002 Meyer 347/65
2002/0135640 A1 * 9/2002 Chen et al. 347/63
2002/0140772 A1 10/2002 Torgerson et al.
2002/0140779 A1 10/2002 Torgerson et al.
2002/0180839 A1 12/2002 Torgerson et al.
2003/0063161 A1 4/2003 Dodd et al.

* cited by examiner

Primary Examiner—Manish S Shah
Assistant Examiner—Laura E Martin

(57) **ABSTRACT**

A fluid ejection device having a first fluid feed source having a first fluid feed source edge in communication with a substrate surface, first firing resistors disposed along the first fluid feed source and configured to respond to a first current to heat fluid provided by the first fluid feed source, and a reference conductor. The reference conductor is configured to conduct the first current from the first firing resistors, wherein the reference conductor is disposed between the first fluid feed source edge and the first firing resistors.

34 Claims, 13 Drawing Sheets

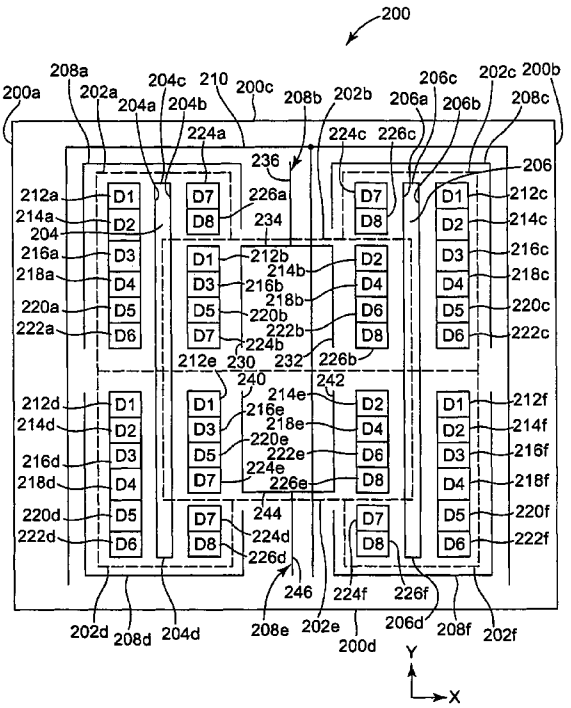

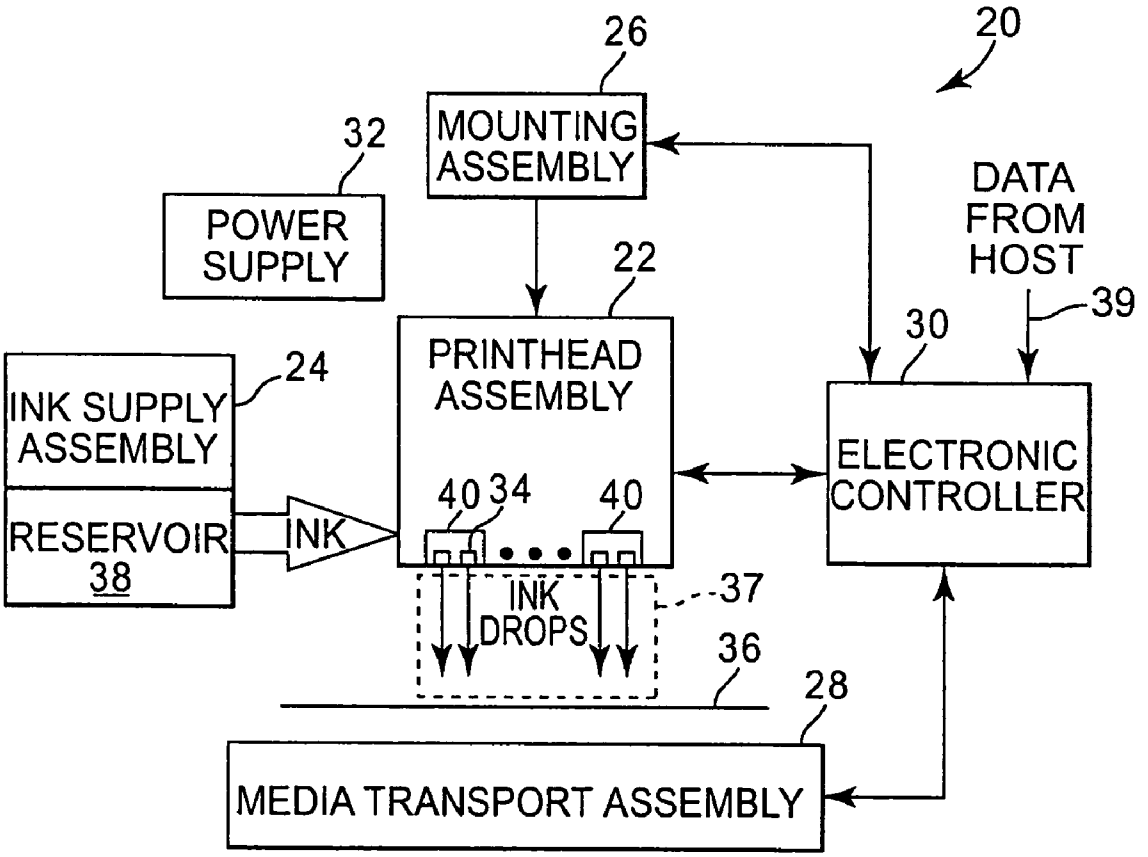
20
26
MOUNTING ASSEMBLY
32
POWER SUPPLY
22
PRINTHEAD ASSEMBLY
DATA FROM HOST
39
30
ELECTRONIC CONTROLLER
24
INK SUPPLY ASSEMBLY
RESERVOIR 38
INK
40
34
40
INK DROPS
37
36
28
MEDIA TRANSPORT ASSEMBLY

Fig. 1

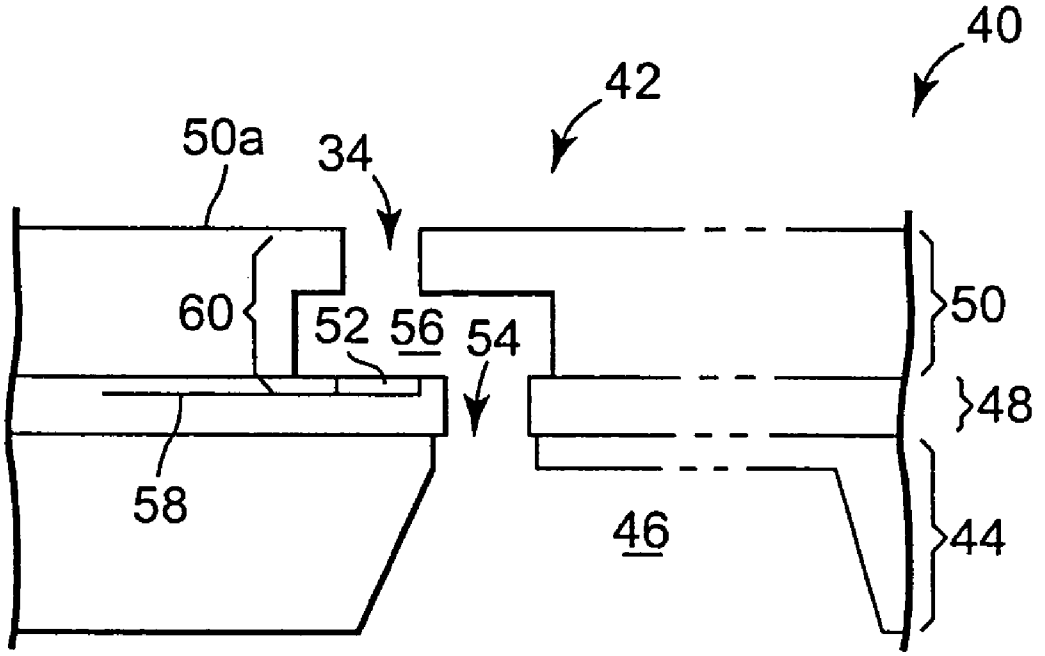

Fig. 2

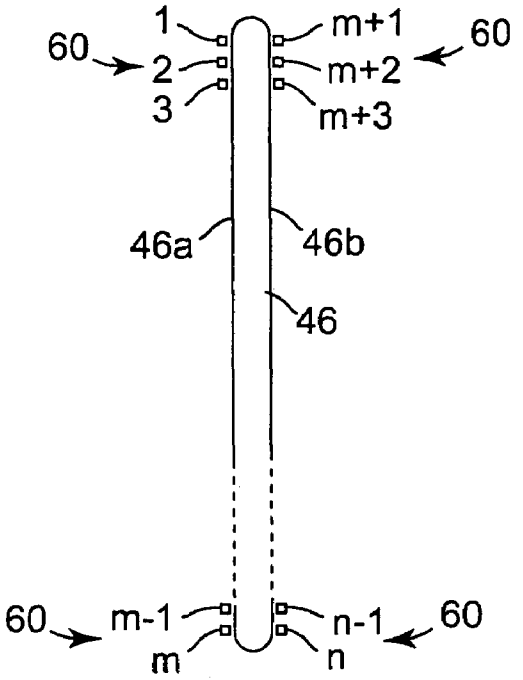
1
m+1
60
60
2
m+2
3
m+3
46a
46b
46
60
m-1
n-1
60
m
n

Fig. 3

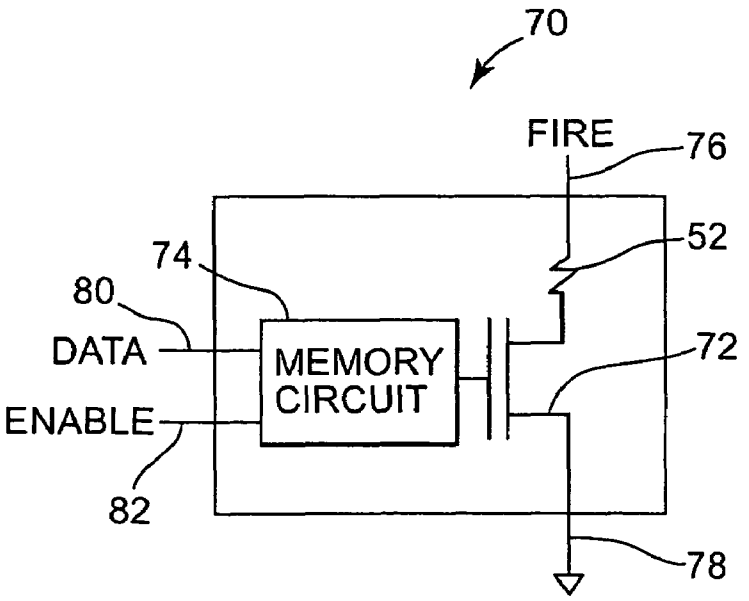
70
FIRE
76
52
74
80
DATA
MEMORY CIRCUIT
72
ENABLE
82
78

Fig. 4

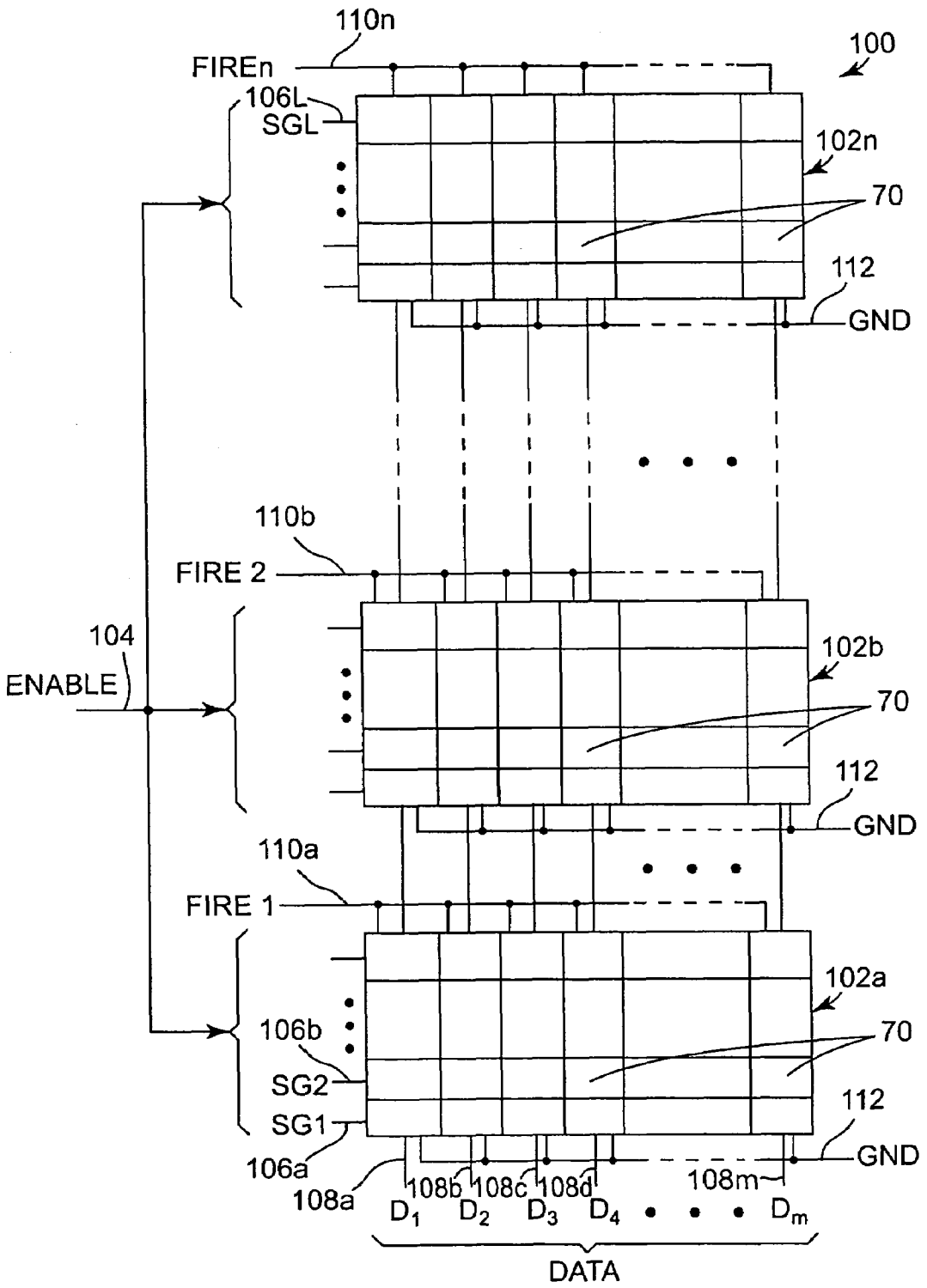
110n
FIREn
100
106L
SGL
102n
70
112
GND
110b
FIRE 2
104
ENABLE
102b
70
112
GND
110a
FIRE 1
102a
106b
70
SG2
SG1
112
GND
106a
108a
108b
108c
108d
108m
D1
D2
D3
D4
Dm
DATA

Fig. 5

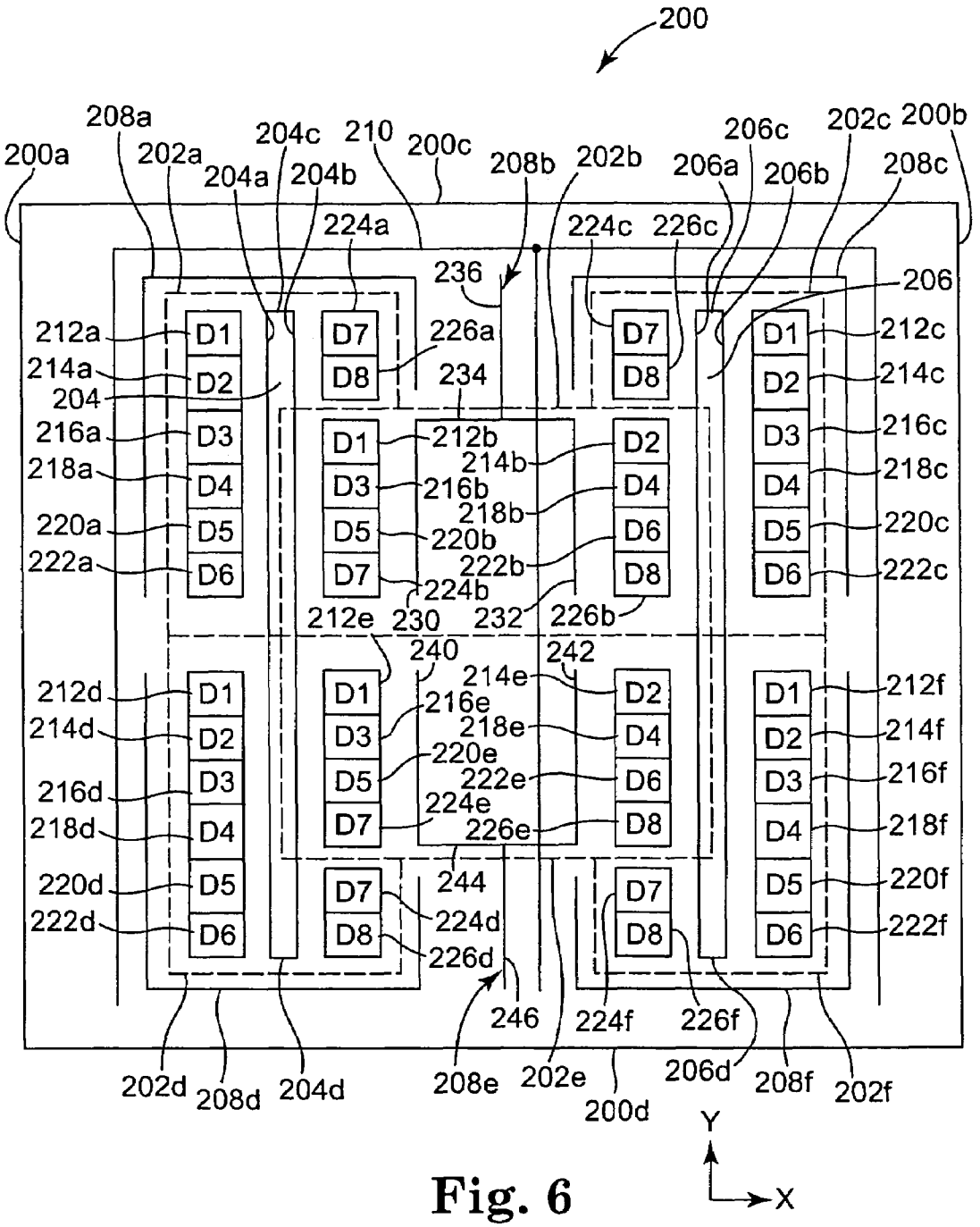
200
200a
208a
202a
204a
204c
204b
210
200c
208b
202b
206a
206c
206b
202c
200b
208c
224a
224c
226c
236
206
212a
214a
204
216a
218a
220a
222a
D1
D2
D3
D4
D5
D6
D7
D8
226a
234
212b
214b
216b
218b
220b
222b
224b
230
232
226b
212c
214c
216c
218c
220c
222c
212e
240
242
214e
216e
218e
220e
222e
224e
226e
244
212d
214d
216d
218d
220d
222d
224d
226d
246
224f
226f
212f
214f
216f
218f
220f
222f
202d
208d
204d
208e
202e
200d
206d
208f
202f
Y
X

Fig. 6

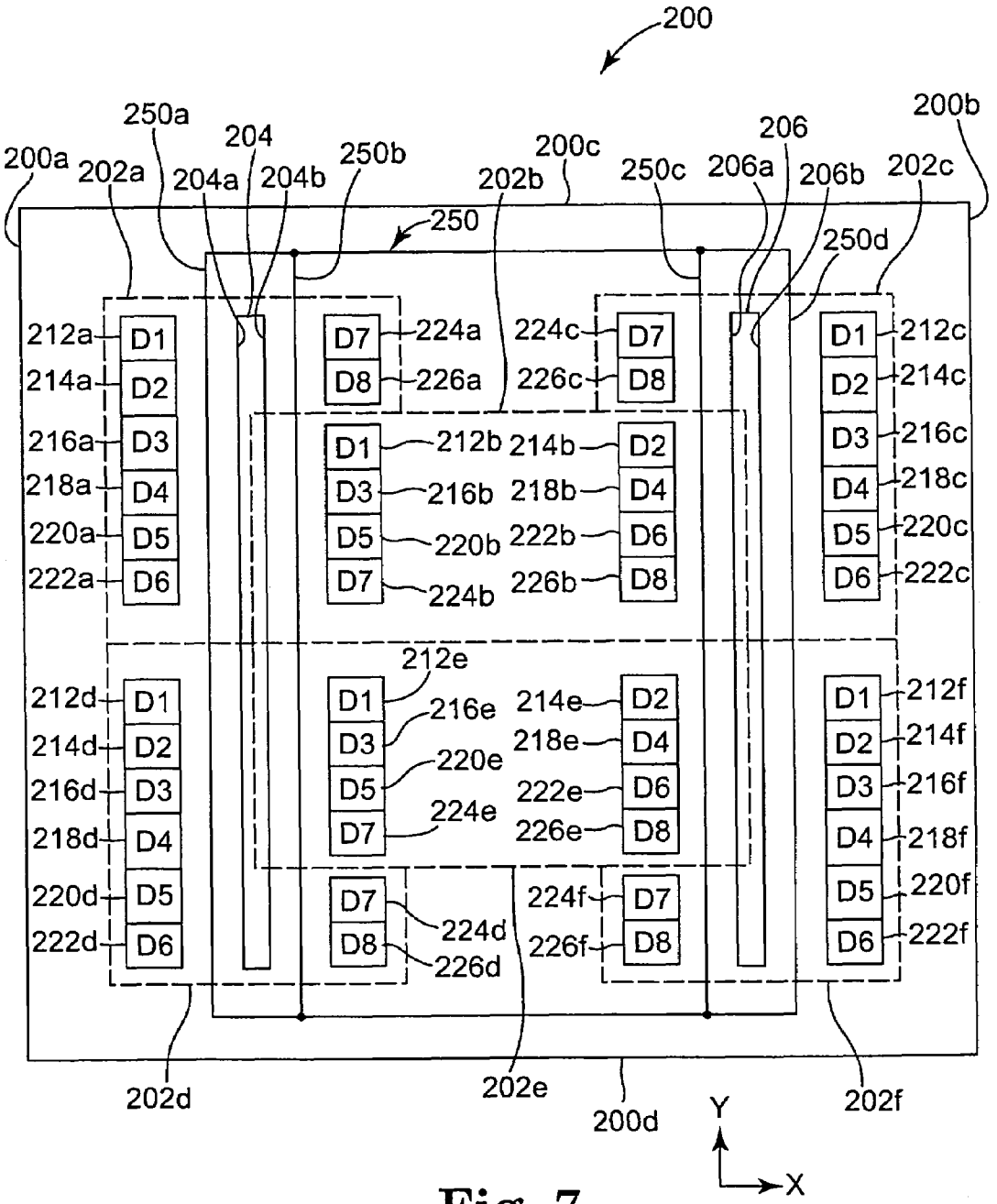
200
200a
202a
250a
204
204a
204b
250b
200c
202b
250c
206
206a
206b
202c
200b
250
250d
212a
214a
216a
218a
220a
222a
D1
D2
D3
D4
D5
D6
D7
D8
224a
226a
224c
226c
212c
214c
216c
218c
220c
222c
212b
216b
220b
224b
214b
218b
222b
226b
212d
214d
216d
218d
220d
222d
212e
216e
220e
224e
214e
218e
222e
226e
212f
214f
216f
218f
220f
222f
224d
226d
224f
226f
202d
202e
200d
202f
Y
X

Fig. 7

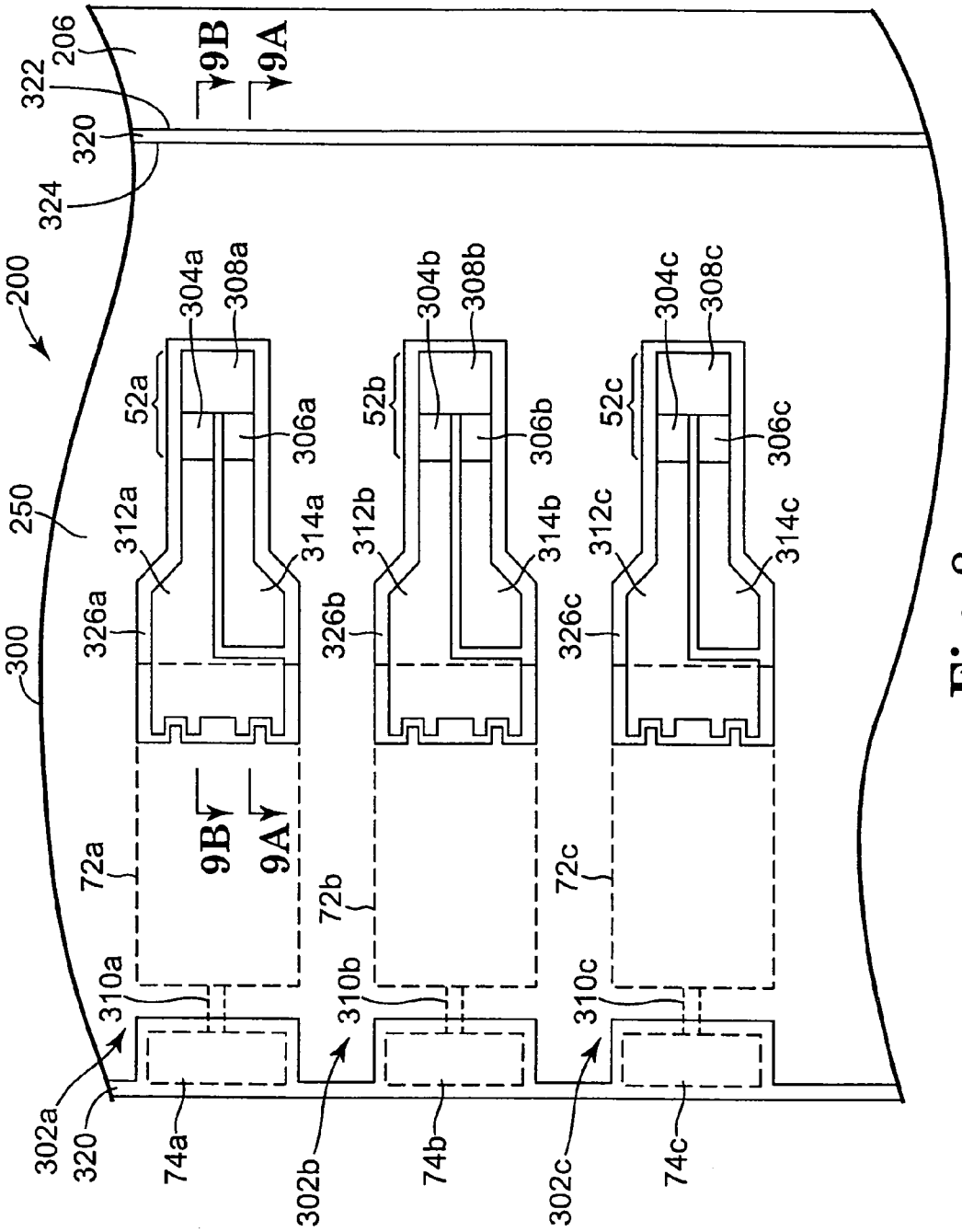
200
250
300
206
322
320
324
9B
9A
304a
308a
52a
306a
312a
314a
326a
304b
308b
52b
306b
312b
314b
326b
304c
308c
52c
306c
312c
314c
326c
72a
72b
72c
310a
310b
310c
302a
302b
302c
74a
74b
74c

Fig. 8

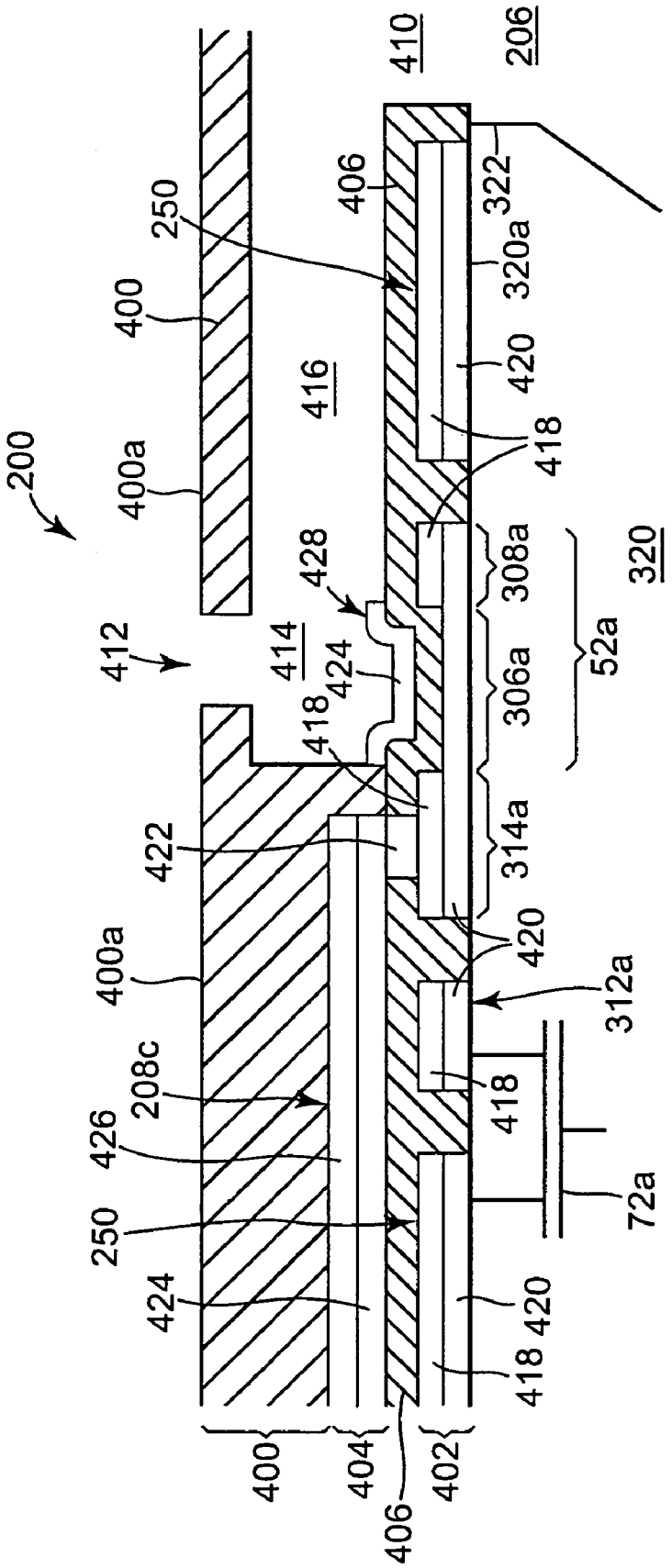
200
400
400a
250
406
410
206
322
320a
420
416
418
428
308a
320
412
414
424
306a
52a
422
314a
312a
208c
426
72a
404
402

Fig. 9A

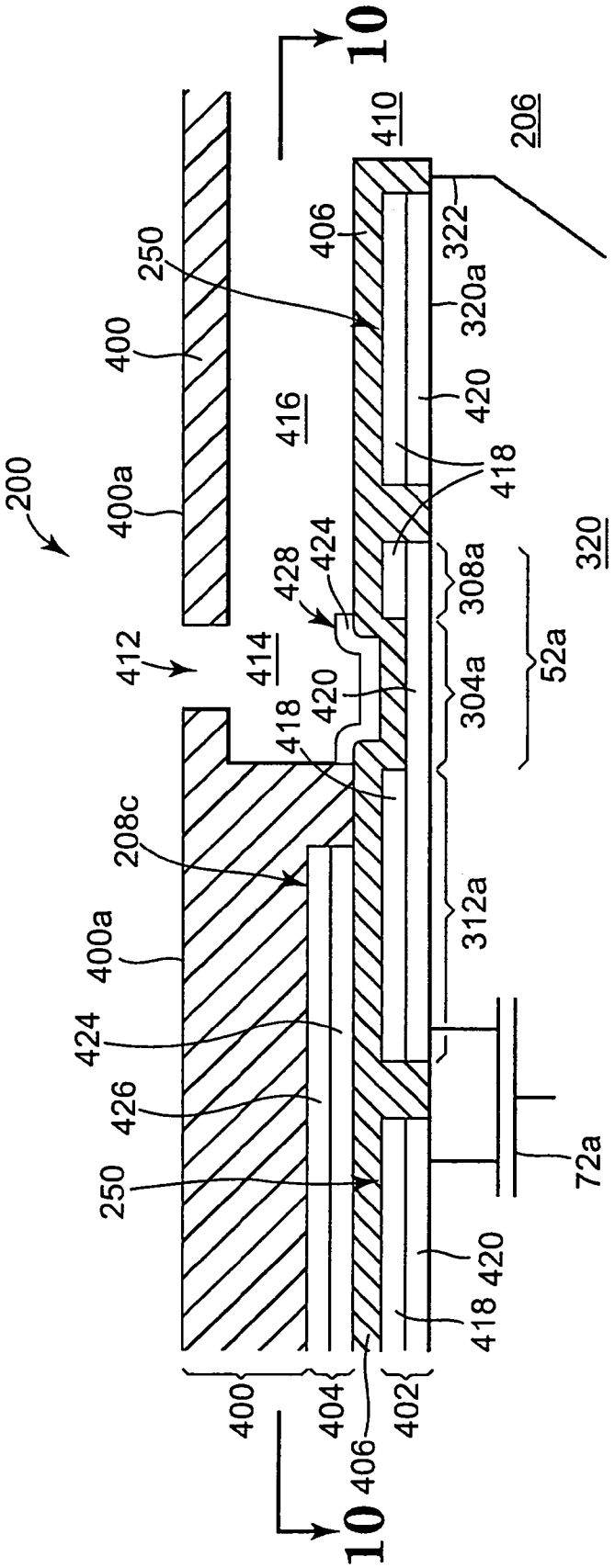
10
410
206
406
322
250
320a
400
420
416
418
200
400a
424
428
308a
320
412
414
420
304a
52a
418
208c
312a
400a
424
426
72a
250
420
418
400
404
406
402
10

Fig. 9B

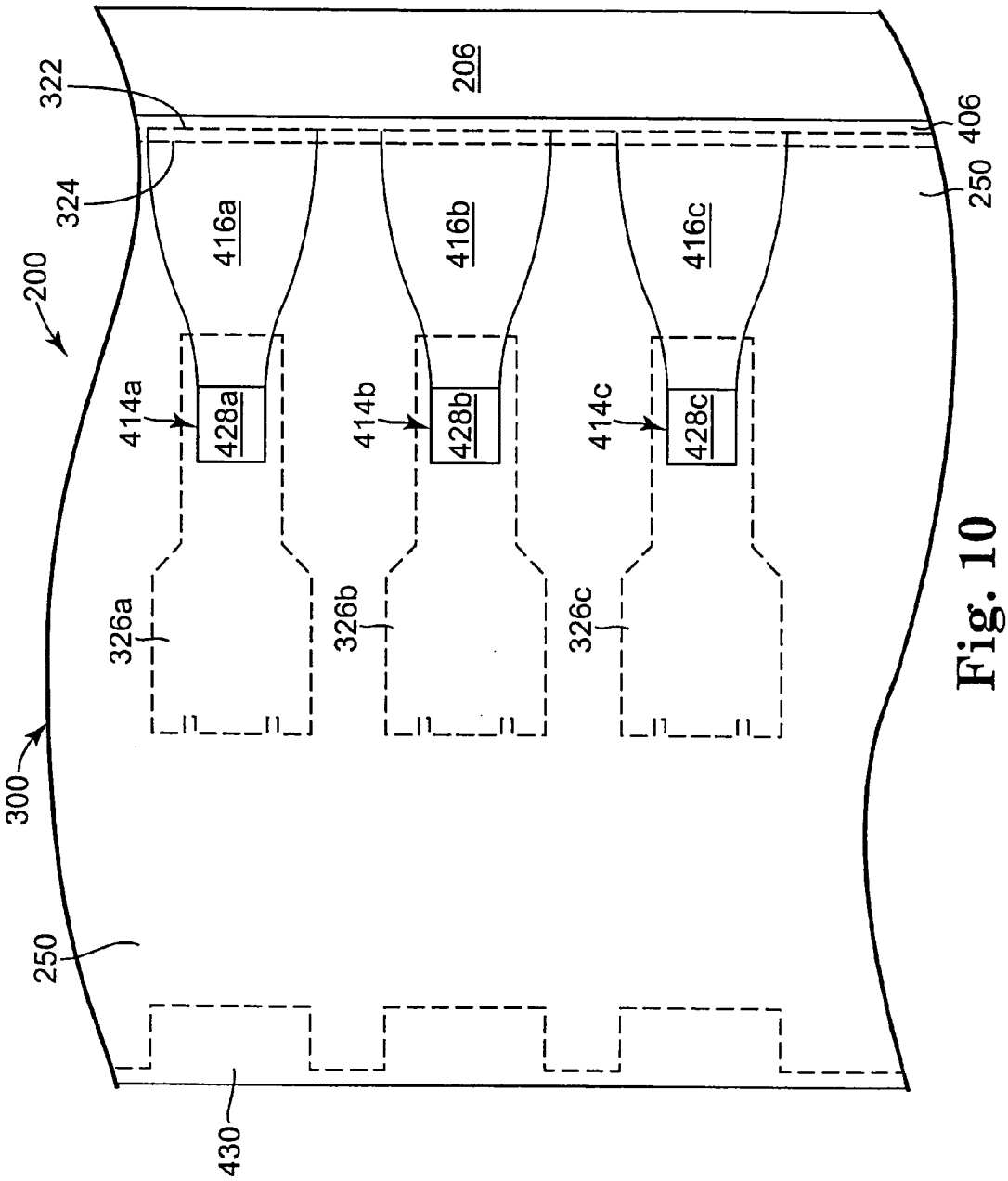
322
324
200
206
416a
416b
416c
406
250
414a
428a
414b
428b
414c
428c
326a
326b
326c
300
250
430

Fig. 10

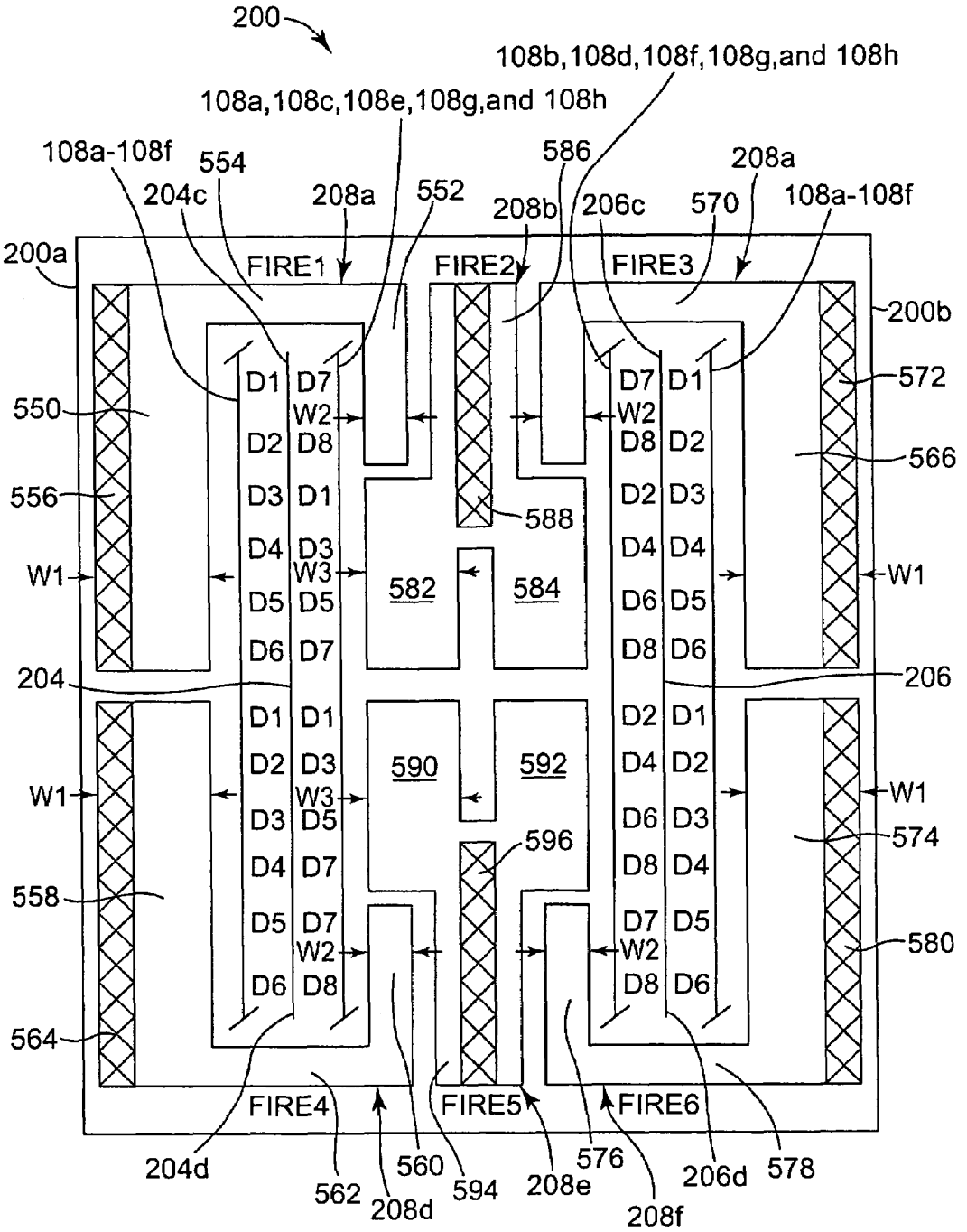
200
108b,108d,108f,108g,and 108h
108a,108c,108e,108g,and 108h
108a-108f
554
586
208a
204c
208a
552
208b
206c
570
108a-108f
200a
FIRE1
FIRE2
FIRE3
200b
572
550
566
556
588
W1
582
584
W1
204
206
590
592
W1
W1
596
574
558
580
564
FIRE4
FIRE5
FIRE6
204d
562
560
208d
594
208e
576
208f
206d
578

Fig. 11

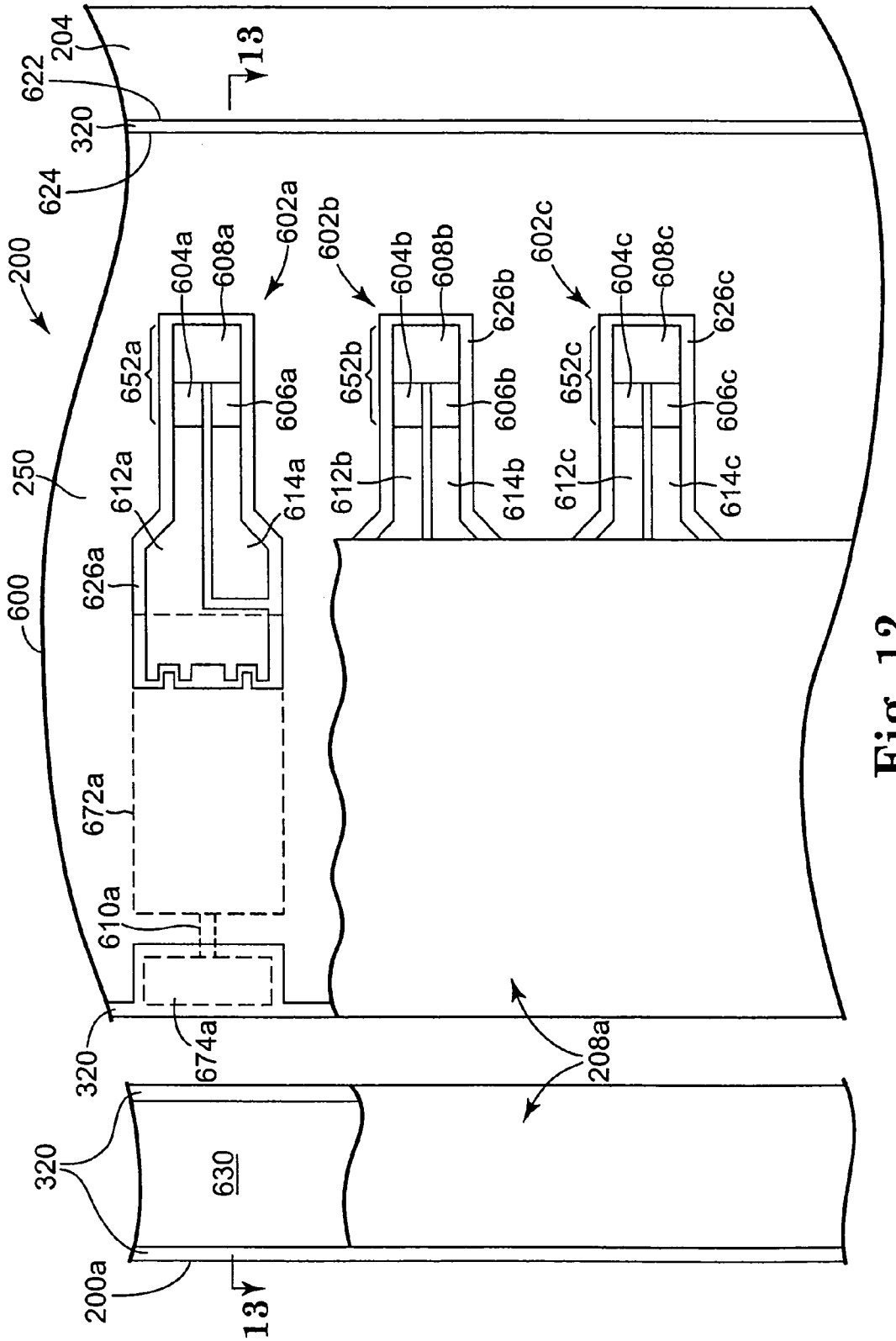
200
204
622
320
624
13
602a
602b
602c
604a
608a
604b
608b
604c
608c
626b
626c
652a
652b
652c
606a
606b
606c
250
612a
612b
612c
614a
614b
614c
626a
600
672a
610a
674a
320
208a
320
630
200a
13

Fig. 12

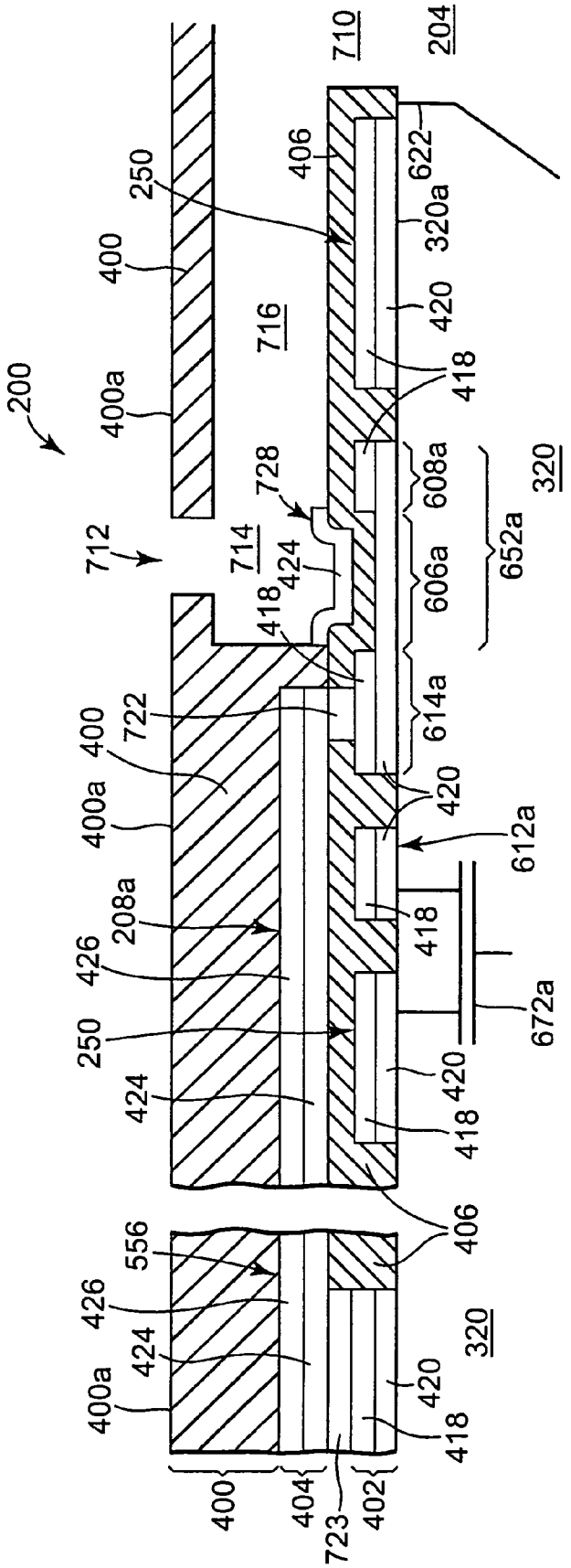
200
400
400a
250
716
712
714
728
424
418
722
208a
426
556
710
204
406
622
320a
420
608a
606a
652a
614a
612a
672a
320
723
404
402

Fig. 13

FLUID EJECTION DEVICE

CROSS-REFERENCE TO RELATED APPLICATIONS

This application is related to patent application Ser. No. 10/827,139 entitled "Fluid Ejection Device," patent application Ser. No. 10/827,163, entitled "Fluid Ejection Device With Address Generator," patent application Ser. No. 10/827,045, entitled "Device With Gates Configured In Loop Structures," patent application Ser. No. 10/827,142, entitled "Fluid Ejection Device," and patent application Ser. No. 10/827,135, entitled "Fluid Ejection Device With Identification Cells," each of which are assigned to the Assignee of this application and are filed on even date herewith, and each of which is fully incorporated by reference as if fully set forth herein.

BACKGROUND

An inkjet printing system, as one embodiment of a fluid ejection system, may include a printhead, an ink supply that provides liquid ink to the printhead, and an electronic controller that controls the printhead. The printhead, as one embodiment of a fluid ejection device, ejects ink drops through a plurality of orifices or nozzles. The ink is projected toward a print medium, such as a sheet of paper, to print an image onto the print medium. The nozzles are typically arranged in one or more arrays, such that properly sequenced ejection of ink from the nozzles causes characters or other images to be printed on the print medium as the printhead and the print medium are moved relative to each other.

In a typical thermal inkjet printing system, the printhead ejects ink drops through nozzles by rapidly heating small volumes of ink located in vaporization chambers. The ink is heated with small electric heaters, such as thin film resistors referred to herein as firing resistors. Heating the ink causes the ink to vaporize and be ejected through the nozzles.

To eject one drop of ink, the electronic controller that controls the printhead activates an electrical current from a power supply external to the printhead. The electrical current is passed through a selected firing resistor to heat the ink in a corresponding selected vaporization chamber and eject the ink through a corresponding nozzle. Known drop generators include a firing resistor, a corresponding vaporization chamber, and a corresponding nozzle.

As inkjet printheads have evolved, the number of drop generators in a printhead has increased to improve printing speed and/or quality. The increase in the number of drop generators per printhead has resulted in a corresponding increase in the number of input pads required on a printhead die to energize the increased number of firing resistors. In one type of printhead, each firing resistor is coupled to a corresponding input pad to provide power to energize the firing resistor. One input pad per firing resistor becomes impractical as the number of firing resistors increases.

The number of drop generators per input pad is significantly increased in another type of printhead having primitives. A single power lead provides power to all firing resistors in one primitive. Each firing resistor is coupled in series with the power lead and the drain-source path of a corresponding field effect transistor (FET). The gate of each FET in a primitive is coupled to a separately energizable address lead that is shared by multiple primitives.

Manufacturers continue reducing the number of input pads and increasing the number of drop generators on a printhead die. A printhead with fewer input pads typically costs less than a printhead with more input pads. Also, a printhead with more drop generators typically prints with higher quality and/or printing speed. To maintain costs and provide a particular printing swath height, printhead die size may not significantly change with an increased number of drop generators. As drop generator densities increase and the number of input pads decrease, printhead die layouts can become increasingly complex.

For these and other reasons, there is a need for the present invention.

BRIEF DESCRIPTION OF THE DRAWINGS

FIG. **1** is a diagram illustrating one embodiment of an inkjet printing system.

FIG. **2** is a diagram illustrating a portion of one embodiment of a printhead die.

FIG. **3** is a diagram illustrating a layout of drop generators located along an ink feed slot in one embodiment of a printhead die.

FIG. **4** is a diagram illustrating one embodiment of a firing cell employed in one embodiment of a printhead die.

FIG. **5** is a schematic diagram illustrating one embodiment of an inkjet printhead firing cell array.

FIG. **6** is a block diagram illustrating one embodiment of a layout of a printhead die.

FIG. **7** is a block diagram illustrating one embodiment of a layout of a reference conductor in a printhead die.

FIG. **8** is a plan view diagram illustrating one embodiment of a section at a first metal layer of a printhead die.

FIG. **9**A is a diagram illustrating a partial cross-section of one embodiment of a printhead die taken at the position of line **9**A in FIG. **8**.

FIG. **9**B is a diagram illustrating a partial cross-section of one embodiment of a printhead die taken at the position of line **9**B in FIG. **8**.

FIG. **10** is a diagram illustrating one embodiment of a section of a printhead die at the position of line **10** in FIG. **9**B.

FIG. **11** is a block diagram illustrating a layout of fire lines in one embodiment of a printhead die.

FIG. **12** is a plan view diagram illustrating one embodiment of a section of a printhead die.

FIG. **13** is a diagram illustrating a partial cross-section of one embodiment of a printhead die taken at the position of line **13** in FIG. **12**.

DETAILED DESCRIPTION

In the following detailed description, reference is made to the accompanying drawings which form a part hereof, and in which is shown by way of illustration specific embodiments in which the invention may be practiced. In this regard, directional terminology, such as "top," "bottom," "front," "back," "leading," "trailing," etc., is used with reference to the orientation of the Figurees(s) being described. Because components of embodiments of the present invention can be positioned in a number of different orientations, the directional terminology is used for purposes of illustration and is in no way limiting. It is to be understood that other embodiments may be utilized and structural or logical changes may be made without departing from the scope of the present invention. The following detailed description, therefore, is not to be taken in a limiting sense, and the scope of the present invention is defined by the appended claims.

FIG. **1** illustrates one embodiment of an inkjet printing system **20**. Inkjet printing system **20** constitutes one embodiment of a fluid ejection system that includes a fluid ejection device, such as inkjet printhead assembly **22**, and a fluid

supply assembly, such as ink supply assembly **24**. The inkjet printing system **20** also includes a mounting assembly **26**, a media transport assembly **28**, and an electronic controller **30**. At least one power supply **32** provides power to the various electrical components of inkjet printing system **20**.

In one embodiment, inkjet printhead assembly **22** includes at least one printhead or printhead die **40** that ejects drops of ink through a plurality of orifices or nozzles **34** toward a print medium **36** so as to print onto print medium **36**. Printhead **40** is one embodiment of a fluid ejection device. Print medium **36** may be any type of suitable sheet material, such as paper, card stock, transparencies, Mylar, fabric, and the like. Typically, nozzles **34** are arranged in one or more columns or arrays such that properly sequenced ejection of ink from nozzles **34** causes characters, symbols, and/or other graphics or images to be printed upon print medium **36** as inkjet printhead assembly **22** and print medium **36** are moved relative to each other. While the following description refers to the ejection of ink from printhead assembly **22**, it is understood that other liquids, fluids or flowable materials, including clear fluid, may be ejected from printhead assembly **22**.

Ink supply assembly **24** as one embodiment of a fluid supply assembly provides ink to printhead assembly **22** and includes a reservoir **38** for storing ink. As such, ink flows from reservoir **38** to inkjet printhead assembly **22**. Ink supply assembly **24** and inkjet printhead assembly **22** can form either a one-way ink delivery system or a recirculating ink delivery system. In a one-way ink delivery system, substantially all of the ink provided to inkjet printhead assembly **22** is consumed during printing. In a recirculating ink delivery system, only a portion of the ink provided to printhead assembly **22** is consumed during printing. As such, ink not consumed during printing is returned to ink supply assembly **24**.

In one embodiment, inkjet printhead assembly **22** and ink supply assembly **24** are housed together in an inkjet cartridge or pen. The inkjet cartridge or pen is one embodiment of a fluid ejection device. In another embodiment, ink supply assembly **24** is separate from inkjet printhead assembly **22** and provides ink to inkjet printhead assembly **22** through an interface connection, such as a supply tube (not shown). In either embodiment, reservoir **38** of ink supply assembly **24** may be removed, replaced, and/or refilled. In one embodiment, where inkjet printhead assembly **22** and ink supply assembly **24** are housed together in an inkjet cartridge, reservoir **38** includes a local reservoir located within the cartridge and may also include a larger reservoir located separately from the cartridge. As such, the separate, larger reservoir serves to refill the local reservoir. Accordingly, the separate, larger reservoir and/or the local reservoir may be removed, replaced, and/or refilled.

Mounting assembly **26** positions inkjet printhead assembly **22** relative to media transport assembly **28** and media transport assembly **28** positions print medium **36** relative to inkjet printhead assembly **22**. Thus, a print zone **37** is defined adjacent to nozzles **34** in an area between inkjet printhead assembly **22** and print medium **36**. In one embodiment, inkjet printhead assembly **22** is a scanning type printhead assembly. As such, mounting assembly **26** includes a carriage (not shown) for moving inkjet printhead assembly **22** relative to media transport assembly **28** to scan print medium **36**. In another embodiment, inkjet printhead assembly **22** is a non-scanning type printhead assembly. As such, mounting assembly **26** fixes inkjet printhead assembly **22** at a prescribed position relative to media transport assembly **28**. Thus, media transport assembly **28** positions print medium **36** relative to inkjet printhead assembly **22**.

Electronic controller or printer controller **30** typically includes a processor, firmware, and other electronics, or any combination thereof, for communicating with and controlling inkjet printhead assembly **22**, mounting assembly **26**, and media transport assembly **28**. Electronic controller **30** receives data **39** from a host system, such as a computer, and usually includes memory for temporarily storing data **39**. Typically, data **39** is sent to inkjet printing system **20** along an electronic, infrared, optical, or other information transfer path. Data **39** represents, for example, a document and/or file to be printed. As such, data **39** forms a print job for inkjet printing system **20** and includes one or more print job commands and/or command parameters.

In one embodiment, electronic controller **30** controls inkjet printhead assembly **22** for ejection of ink drops from nozzles **34**. As such, electronic controller **30** defines a pattern of ejected ink drops that form characters, symbols, and/or other graphics or images on print medium **36**. The pattern of ejected ink drops is determined by the print job commands and/or command parameters.

In one embodiment, inkjet printhead assembly **22** includes one printhead **40**. In another embodiment, inkjet printhead assembly **22** is a wide-array or multi-head printhead assembly. In one wide-array embodiment, inkjet printhead assembly **22** includes a carrier, which carries printhead dies **40**, provides electrical communication between printhead dies **40** and electronic controller **30**, and provides fluidic communication between printhead dies **40** and ink supply assembly **24**.

FIG. **2** is a diagram illustrating a portion of one embodiment of a printhead die **40**. The printhead die **40** includes an array of printing or fluid ejecting elements **42**. Printing elements **42** are formed on a substrate **44**, which has an ink feed slot **46** formed therein. As such, ink feed slot **46** provides a supply of liquid ink to printing elements **42**. Ink feed slot **46** is one embodiment of a fluid feed source. Other embodiments of fluid feed sources include but are not limited to corresponding individual ink feed holes feeding corresponding vaporization chambers and multiple shorter ink feed trenches that each feed corresponding groups of fluid ejecting elements. A thin-film structure **48** has an ink feed channel **54** formed therein which communicates with ink feed slot **46** formed in substrate **44**. An orifice layer **50** has a front face **50***a* and a nozzle opening **34** formed in front face **50***a*. Orifice layer **50** also has a nozzle chamber or vaporization chamber **56** formed therein which communicates with nozzle opening **34** and ink feed channel **54** of thin-film structure **48**. A firing resistor **52** is positioned within vaporization chamber **56** and leads **58** electrically couple firing resistor **52** to circuitry controlling the application of electrical current through selected firing resistors. A drop generator **60** as referred to herein includes firing resistor **52**, nozzle chamber or vaporization chamber **56** and nozzle opening **34**.

During printing, ink flows from ink feed slot **46** to vaporization chamber **56** via ink feed channel **54**. Nozzle opening **34** is operatively associated with firing resistor **52** such that droplets of ink within vaporization chamber **56** are ejected through nozzle opening **34** (e.g., substantially normal to the plane of firing resistor **52**) and toward print medium **36** upon energizing of firing resistor **52**.

Example embodiments of printhead dies **40** include a thermal printhead, a piezoelectric printhead, an electrostatic printhead, or any other type of fluid ejection device known in the art that can be integrated into a multi-layer structure. Substrate **44** is formed, for example, of silicon, glass, ceramic, or a stable polymer and thin-film structure **48** is formed to include one or more passivation or insulation layers of silicon dioxide, silicon carbide, silicon nitride, tantalum,

polysilicon glass, or other suitable material. Thin-film structure **48**, also, includes at least one conductive layer, which defines firing resistor **52** and leads **58**. In one embodiment, the conductive layer comprises, for example, aluminum, gold, tantalum, tantalum-aluminum, or other metal or metal alloy. In one embodiment, firing cell circuitry, such as described in detail below, is implemented in substrate and thin-film layers, such as substrate **44** and thin-film structure **48**.

In one embodiment, orifice layer **50** comprises a photoimageable epoxy resin, for example, an epoxy referred to as SU8, marketed by Micro-Chem, Newton, Mass. Exemplary techniques for fabricating orifice layer **50** with SU8 or other polymers are described in detail in U.S. Pat. No. 6,162,589, which is herein incorporated by reference. In one embodiment, orifice layer **50** is formed of two separate layers referred to as a barrier layer (e.g., a dry film photo resist barrier layer) and a metal orifice layer (e.g., a nickel, copper, iron/nickel alloys, palladium, gold, or rhodium layer) formed over the barrier layer. Other suitable materials, however, can be employed to form orifice layer **50**.

FIG. **3** is a diagram illustrating drop generators **60** located along ink feed slot **46** in one embodiment of printhead die **40**. Ink feed slot **46** includes opposing ink feed slot sides **46***a* and **46***b*. Drop generators **60** are disposed along each of the opposing ink feed slot sides **46***a* and **46***b*. A total of n drop generators **60** are located along ink feed slot **46**, with m drop generators **60** located along ink feed slot side **46***a*, and n–m drop generators **60** located along ink feed slot side **46***b*. In one embodiment, n equals 200 drop generators **60** located along ink feed slot **46** and m equals 100 drop generators **60** located along each of the opposing ink feed slot sides **46***a* and **46***b*. In other embodiments, any suitable number of drop generators **60** can be disposed along ink feed slot **46**.

Ink feed slot **46** provides ink to each of the n drop generators **60** disposed along ink feed slot **46**. Each of the n drop generators **60** includes a firing resistor **52**, a vaporization chamber **56** and a nozzle **34**. Each of the n vaporization chambers **56** is fluidically coupled to ink feed slot **46** through at least one ink feed channel **54**. The firing resistors **52** of drop generators **60** are energized in a controlled sequence to eject fluid from vaporization chambers **56** and through nozzles **34** to print an image on print medium **36**.

FIG. **4** is a diagram illustrating one embodiment of a firing cell **70** employed in one embodiment of printhead die **40**. Firing cell **70** includes a firing resistor **52**, a resistor drive switch **72**, and a memory circuit **74**. Firing resistor **52** is part of a drop generator **60**. Drive switch **72** and memory circuit **74** are part of the circuitry that controls the application of electrical current through firing resistor **52**. Firing cell **70** is formed in thin-film structure **48** and on substrate **44**.

In one embodiment, firing resistor **52** is a thin-film resistor and drive switch **72** is a field effect transistor (FET). Firing resistor **52** is electrically coupled to a fire line **76** and the drain-source path of drive switch **72**. The drain-source path of drive switch **72** is also electrically coupled to a reference line **78** that is coupled to a reference voltage, such as ground. The gate of drive switch **72** is electrically coupled to memory circuit **74** that controls the state of drive switch **72**.

Memory circuit **74** is electrically coupled to a data line **80** and enable lines **82**. Data line **80** receives a data signal that represents part of an image and enable lines **82** receive enable signals to control operation of memory circuit **74**. Memory circuit **74** stores one bit of data as it is enabled by the enable signals. The logic level of the stored data bit sets the state (e.g., on or off, conducting or non-conducting) of drive switch **72**. The enable signals can include one or more select signals and one or more address signals.

Fire line **76** receives an energy signal comprising energy pulses and provides an energy pulse to firing resistor **52**. In one embodiment, the energy pulses are provided by electronic controller **30** to have timed starting times and timed duration to provide a proper amount of energy to heat and vaporize fluid in the vaporization chamber **56** of a drop generator **60**. If drive switch **72** is on (conducting), the energy pulse heats firing resistor **52** to heat and eject fluid from drop generator **60**. If drive switch **72** is off (non-conducting), the energy pulse does not heat firing resistor **52** and the fluid remains in drop generator **60**.

FIG. **5** is a schematic diagram illustrating one embodiment of an inkjet printhead firing cell array, indicated at **100**. Firing cell array **100** includes a plurality of firing cells **70** arranged into n fire groups **102***a*-**102***n*. In one embodiment, firing cells **70** are arranged into six fire groups **102***a*-**102***n*. In other embodiments, firing cells **70** can be arranged into any suitable number of fire groups **102***a*-**102***n*, such as four or more fire groups **102***a*-**102***n*.

The firing cells **70** in array **100** are schematically arranged into L rows and m columns. The L rows of firing cells **70** are electrically coupled to enable lines **104** that receive enable signals. Each row of firing cells **70**, referred to herein as a row subgroup or subgroup of firing cells **70**, is electrically coupled to one set of subgroup enable lines **106***a*-**106**L. The subgroup enable lines **106***a*-**106**L receive subgroup enable signals SG**1**, SG**2**, . . . SG_L that enable the corresponding subgroup of firing cells **70**.

The m columns are electrically coupled to m data lines **108***a*-**108***m* that receive data signals D**1**, D**2** . . . Dm, respectively. Each of the m columns includes firing cells **70** in each of the n fire groups **102***a*-**102***n* and each column of firing cells **70**, referred to herein as a data line group or data group, is electrically coupled to one of the data lines **108***a*-**108***m*. In other words, each of the data lines **108***a*-**108***m* is electrically coupled to each of the firing cells **70** in one column, including firing cells **70** in each of the fire groups **102***a*-**102***n*. For example, data line **108***a* is electrically coupled to each of the firing cells **70** in the far left column, including firing cells **70** in each of the fire groups **102***a*-**102***n*. Data line **108***b* is electrically coupled to each of the firing cells **70** in the adjacent column and so on, over to and including data line **108***m* that is electrically coupled to each of the firing cells **70** in the far right column, including firing cells **70** in each of the fire groups **102***a*-**102***n*.

In one embodiment, array **100** is arranged into six fire groups **102***a*-**102***n* and each of the six fire groups **102***a*-**102***n* include 13 subgroups and eight data line groups. In other embodiments, array **100** can be arranged into any suitable number of fire groups **102***a*-**102***n* and into any suitable number of subgroups and data line groups. In any embodiment, fire groups **102***a*-**102***n* are not limited to having the same number of subgroups and data line groups. Instead, each of the fire groups **102***a*-**102***n* can have a different number of subgroups and/or data line groups as compared to any other fire group **102***a*-**102***n*. In addition, each subgroup can have a different number of firing cells **70** as compared to any other subgroup, and each data line group can have a different number of firing cells **70** as compared to any other data line group.

The firing cells **70** in each of the fire groups **102***a*-**102***n* are electrically coupled to one of the fire lines **110***a*-**110***n*. In fire group **102***a*, each of the firing cells **70** is electrically coupled to fire line **110***a* that receives fire signal or energy signal FIRE **1**. In fire group **102***b*, each of the firing cells **70** is electrically coupled to fire line **110***b* that receives fire signal or energy signal FIRE **2** and so on, up to and including fire group **102***n* wherein each of the firing cells **70** is electrically coupled to

fire line **110***n* that receives fire signal or energy signal FIREn. In addition, each of the firing cells **70** in each of the fire groups **102***a*-**102***n* is electrically coupled to a common reference line **112** that is tied to ground.

In operation, subgroup enable signals SG**1**, SG**2**, . . . SG_L are provided on subgroup enable lines **106***a*-**106**L to enable one subgroup of firing cells **70**. The enabled firing cells **70** store data signals D**1**, D**2** . . . Dm provided on data lines **108***a*-**108***m*. The data signals D**1**, D**2** . . . Dm are stored in memory circuits **74** of enabled firing cells **70**. Each of the stored data signals D**1**, D**2** . . . Dm sets the state of drive switch **72** in one of the enabled firing cells **70**. The drive switch **72** is set to conduct or not conduct based on the stored data signal value.

After the states of the selected drive switches **72** are set, an energy signal FIRE **1**-FIREn is provided on the fire line **110***a*-**110***n* corresponding to the fire group **102***a*-**102***n* that includes the selected subgroup of firing cells **70**. The energy signal FIRE **1**-FIREn includes an energy pulse. The energy pulse is provided on the selected fire line **110***a*-**110***n* to energize firing resistors **52** in firing cells **70** that have conducting drive switches **72**. The energized firing resistors **52** heat and eject ink onto print medium **36** to print an image represented by data signals D**1**, D**2** . . . Dm. The process of enabling a subgroup of firing cells **70**, storing data signals D**1**, D**2** . . . Dm in the enabled subgroup and providing an energy signal FIRE **1**-FIREn to energize firing resistors **52** in the enabled subgroup continues until printing stops.

In one embodiment, as an energy signal FIRE **1**-FIREn is provided to a selected fire group **102***a*-**102***n*, subgroup enable signals SG**1**, SG**2**, . . . SG_L change to select and enable another subgroup in a different fire group **102***a*-**102***n*. The newly enabled subgroup stores data signals D**1**, D**2** . . . Dm provided on data lines **108***a*-**108***m* and an energy signal FIRE **1**-FIREn is provided on one of the fire lines **110***a*-**110***n* to energize firing resistors **52** in the newly enabled firing cells **70**. At any one time, only one subgroup of firing cells **70** is enabled by subgroup enable signals SG**1**, SG**2**, . . . SG_L to store data signals D**1**, D**2** . . . Dm provided on data lines **108***a*-**108***m*. In this aspect, data signals D**1**, D**2** . . . Dm on data lines **108***a*-**108***m* are timed division multiplexed data signals. Also, only one subgroup in a selected fire group **102***a*-**102***n* includes drive switches **72** that are set to conduct while an energy signal FIRE **1**-FIREn is provided to the selected fire group **102***a*-**102***n*. However, energy signals FIRE **1**-FIREn provided to different fire groups **102***a*-**102***n* can and do overlap.

FIG. **6** is a block diagram illustrating one embodiment of a layout of printhead die **200**. The printhead die **200** includes six fire groups **202***a*-**202***f*, two ink feed slots **204** and **206**, six fire lines **208***a*-**208***f* and enable lines **210**. The fire lines **208***a*-**208***f* correspond to fire groups **202***a*-**202***f*, respectively. The enable lines **210** provide subgroup enable signals SG**1**, SG**2**, . . . SG_L to fire groups **202***a*-**202***f* to enable selected row subgroups.

The six fire groups **202***a*-**202***f* are disposed along ink feed slots **204** and **206**. Fire groups **202***a* and **202***d* are disposed along ink feed slot **204**, and fire groups **202***c* and **202***f* are disposed along ink feed slot **206**. The fire groups **202***b* and **202***e* are disposed along both ink feed slots **204** and **206**. The ink feed slots **204** and **206** are located parallel to one another and each ink feed slot **204** and **206** includes a length that extends along the y-direction of printhead die **200**. In one embodiment, ink feed slots **204** and **206** supply the same color ink, such as black, yellow, magenta or cyan colored ink, to drop generators **60** in fire groups **202***a*-**202***f*. In other embodiments, each of the ink feed slots **204** and **206** supplies a different color ink to the drop generators **60**.

The fire groups **202***a*-**202***f* are divided into eight data line groups, indicated at D**1**-D**8**. Each data line group D**1**-D**8** includes firing cells **70** from each of the six fire groups **202***a*-**202***f*. Each of the firing cells **70** in a data line group D**1**-D**8** is electrically coupled to a corresponding one of the eight data lines **108***a*-**108***h* (FIG. **5**). Data line group D**1**, indicated at **212***a*-**212***f*, includes firing cells **70** electrically coupled to data line **108***a*. Data line group D**2**, indicated at **214***a*-**214***f*, includes firing cells **70** electrically coupled to data line **108***b*. Data line group D**3**, indicated at **216***a*-**216***f*, includes firing cells **70** electrically coupled to data line **108***c*. Data line group D**4**, indicated at **218***a*-**218***f*, includes firing cells **70** electrically coupled to data line **108***d*. Data line group D**5**, indicated at **220***a*-**220***f*, includes firing cells **70** electrically coupled to data line **108***e*. Data line group D**6**, indicated at **222***a*-**222***f*, includes firing cells **70** electrically coupled to data line **108***f*. Data line group D**7**, indicated at **224***a*-**224***f*, includes firing cells **70** electrically coupled to data line **108***g*, and data line group D**8**, indicated at **226***a*-**226***f*, includes firing cells **70** electrically coupled to data line **108***h*. Each of the firing cells **70** in printhead die **200** is electrically coupled to only one data line **108***a*-**108***h*, and each data line **108***a*-**108***h* is electrically coupled to all memory circuits **74** in firing cells **70** of the corresponding data line group D**1**-D**8**.

Fire group **1** (FG**1**) **202***a* is disposed along a first part of ink feed slot **204**. The ink feed slot **204** includes opposing ink feed slot sides **204***a* and **204***b* that extend along the y-direction of printhead die **200**. The firing cells **70** in printhead die **200** include firing resistors **52** that are part of drop generators **60**. The drop generators **60** in FG**1** at **202***a* are disposed along each of the opposing sides **204***a* and **204***b* of ink feed slot **204**. The drop generators **60** in FG**1** at **202***a* are fluidically coupled to ink feed slot **204** to receive ink from ink feed slot **204**.

Drop generators **60** in data line groups D**1**-D**6**, indicated at **212***a*, **214***a* , **216***a*, **218***a*, **220***a* and **222***a* in FG**1** at **202***a* are disposed along one side **204***a* of ink feed slot **204**. Drop generators **60** in data line groups D**7** and D**8**, indicated at **224***a* and **226***a*, are disposed along the opposing side **204***b* of ink feed slot **204**. The drop generators **60** in data line groups D**1**-D**6** at **212***a*, **214***a* , **216***a*, **218***a*, **220***a* and **222***a* are disposed between one side **200***a* of printhead die **200** and ink feed slot **204**. The drop generators **60** in data line groups D**7** and D**8** at **224***a* and **226***a* are disposed along an inside channel of printhead die **200** between ink feed slot **204** and ink feed slot **206**.

In one embodiment, drop generators **60** in data line groups D**1**-D**6** at **212***a*, **214***a* , **216***a*, **218***a*, **220***a* and **222***a* are located along the length of side **204***a* of ink feed slot **204**, such that data line group D**1** at **212***a* is next to data line group D**2** at **214***a* , which is between data line D**1** at **212***a* and data line group D**3** at **216***a*. Data line group D**4** at **218***a* is between data line group D**3** at **216***a* and data line group D**5** at **220***a*. Data line group D**6** at **222***a* is next to data line group D**5** at **220***a*. Drop generators **60** in data line groups D**7** and D**8** at **224***a* and **226***a* are located along the opposing side **204***b* of ink feed slot **204**, such that data line group D**1** at **212***a* is opposite data line group D**7** at **224***a* and data line group D**2** at **214***a* is opposite data line group D**8** at **226***a*.

Fire group **4** (FG**4**) **202***d* is disposed along a second part of ink feed slot **204**. The drop generators **60** in FG**4** at **202***d* are disposed along each of the opposing sides **204***a* and **204***b* of ink feed slot **204** and fluidically coupled to ink feed slot **204** to receive ink from ink feed slot **204**. Drop generators **60** in data line groups D**1**-D**6**, indicated at **212***d*, **214***d*, **216***d*, **218***d*, **220***d* and **222***d* are disposed along one side **204***a* of ink feed slot **204**. Drop generators **60** in data line groups D**7** and D**8**, indicated at **224***d* and **226***d*, are disposed along the opposing

side **204***b* of ink feed slot **204**. The drop generators **60** in data line groups D**1**-D**6** at **212***d*, **214***d*, **216***d*, **218***d*, **220***d* and **222***d* are disposed between one side **200***a* of printhead die **200** and ink feed slot **204**. Drop generators **60** in data line groups D**7** and D**8** at **224***d* and **226***d* are disposed along an inside channel of printhead die **200** between ink feed slot **204** and ink feed slot **206**.

In one embodiment, drop generators **60** in data line groups D**1**-D**6** at **212***d*, **214***d*, **216***d*, **218***d*, **220***d* and **222***d* are located along the length of one side **204***a* of ink feed slot **204**, such that data line group D**1** at **212***d* is next to data line group D**2** at **214***d*, which is between data line group D**1** at **212***d* and data line group D**3** at **216***d*. Data line group D**4** at **218***d* is between data line group D**3** at **216***d* and data line group D**5** at **220***d*. Data line group D**6** at **222***d* is next to data line group D**5** at **220***d*. Drop generators **60** in data line groups D**7** and D**8** at **224***d* and **226***d* are located along the opposing side **204***b* of ink feed slot **204**, such that data line group D**5** at **220***d* is opposite data line group D**7** at **224***d* and data line group D**6** at **222***d* is opposite data line group D**8** at **226***d*.

Fire group **3** (FG**3**) **202***c* is disposed along a first part of ink feed slot **206**. The ink feed slot **206** includes opposing ink feed slot sides **206***a* and **206***b* that extend along the y-direction of printhead die **200**. The firing cells **70** in printhead die **200** include firing resistors **52** that are part of drop generators **60**. The drop generators **60** in FG**3** at **202***c* are disposed along each of the opposing sides **206***a* and **206***b* of ink feed slot **206**. The drop generators **60** in FG**3** at **202***c* are fluidically coupled to ink feed slot **206** to receive ink from ink feed slot **206**.

Drop generators **60** in data line groups D**1**-D**6**, indicated at **212***c*, **214***c*, **216***c*, **218***c*, **220***c* and **222***c* in FG**3** at **202***c* are disposed along one side **206***b* of ink feed slot **206**. Drop generators **60** in data line groups D**7** and D**8**, indicated at **224***c* and **226***c*, are disposed along the opposing side **206***a* of ink feed slot **206**. The drop generators **60** in data line groups D**1**-D**6** at **212***c*, **214***c*, **216***c*, **218***c*, **220***c* and **222***c* are disposed between one side **200***b* of printhead die **200** and ink feed slot **206**. The drop generators **60** in data line groups D**7** and D**8** at **224***c* and **226***c* are disposed along an inside channel of printhead die **200** between ink feed slot **204** and ink feed slot **206**.

In one embodiment, drop generators **60** in data line groups D**1**-D**6** at **212***c*, **214***c*, **216***c*, **218***c*, **220***c* and **222***c* are located along the length of side **206***b* of ink feed slot **206**, such that data line group D**1** at **212***c* is next to data line group D**2** at **214***c*, which is between data line D**1** at **212***c* and data line group D**3** at **216***c*. Data line group D**4** at **218***c* is between data line group D**3** at **216***c* and data line group D**5** at **220***c*. Data line group D**6** at **222***c* is next to data line group D**5** at **220***c*. Drop generators **60** in data line groups D**7** and D**8** at **224***c* and **226***c* are located along the opposing side **206***a* of ink feed slot **206**, such that data line group D**1** at **212***c* is opposite data line group D**7** at **224***c* and data line group D**2** at **214***c* is opposite data line group D**8** at **226***c*.

Fire group **6** (FG**6**) **202***f* is disposed along a second part of ink feed slot **206**. The drop generators **60** in FG**6** at **202***f* are disposed along each of the opposing sides **206***a* and **206***b* of ink feed slot **206** and fluidically coupled to ink feed slot **206** to receive ink from ink feed slot **206**. Drop generators **60** in data line groups D**1**-D**6**, indicated at **212***f*, **214***f*, **216***f*, **218***f*, **220***f* and **222***f* are disposed along one side **206***b* of ink feed slot **206**. Drop generators **60** in data line groups D**7** and D**8**, indicated at **224***f* and **226***f*, are disposed along the opposing side **206***a* of ink feed slot **206**. The drop generators **60** in data line groups D**1**-D**6** at **212***f*, **214***f*, **216***f*, **218***f*, **220***f* and **222***f* are disposed between one side **200***b* of printhead die **200** and ink feed slot **206**. Drop generators **60** in data line groups D**7** and D**8** at **224***f* and **226***f* are disposed along an inside channel of printhead die **200** between ink feed slot **204** and ink feed slot **206**.

In one embodiment, drop generators **60** in data line groups D**1**-D**6** at **212***f*, **214***f*, **216***f*, **218***f*, **220***f* and **222***f* are located along the length of one side **206***b* of ink feed slot **206**, such that data line group D**1** at **212***f* is next to data line group D**2** at **214***f*, which is between data line group D**1** at **212***f* and data line group D**3** at **216***f*. Data line group D**4** at **218***f* is between data line group D**3** at **216***f* and data line group D**5** at **220***f*. Data line group D**6** at **222***f* is next to data line group D**5** at **220***f*. Drop generators **60** in data line groups D**7** and D**8** at **224***f* and **226***f* are located along the opposing side **206***a* of ink feed slot **206**, such that data line group D**5** at **220***f* is opposite data line group D**7** at **224***f* and data line group D**6** at **222***f* is opposite data line group D**8** at **226***f*.

Fire group **2** (FG**2**) **202***b* is disposed along the first parts of ink feed slots **204** and **206**. The drop generators **60** in FG**2** at **202***b* are disposed along side **204***b* of ink feed slot **204** and side **206***a* of ink feed slot **206**. Drop generators **60** in data line groups D**1**, D**3**, D**5** and D**7**, indicated at **212***b*, **216***b*, **220***b* and **224***b* are disposed along side **204***b* of ink feed slot **204** and fluidically coupled to ink feed slot **204** to receive ink from ink feed slot **204**. Drop generators **60** in data line groups D**2**, D**4**, D**6** and D**8**, indicated at **214***b*, **218***b*, **222***b* and **226***b* are disposed along side **206***a* of ink feed slot **206** to receive ink from ink feed slot **206**. The drop generators **60** in FG**2** at **202***b* are disposed between ink feed slots **204** and **206**.

In one embodiment, drop generators **60** in data line groups D**1**, D**3**, D**5** and D**7** at **212***b*, **216***b*, **220***b* and **224***b* are located along the length of side **204***b* of ink feed slot **204** and drop generators **60** in data line groups D**2**, D**4**, D**6** and D**8** at **214***b*, **218***b*, **222***b* and **226***b* are located along the length of side **206***a* of ink feed slot **206**. Data line group D**1** at **212***b* in FG**2** at **202***b* on side **204***b* of ink feed slot **204** is across from or opposite data line group D**3** at **216***a* in FG**1** at **202***a* along side **204***a*. Data line group D**3** at **216***b* in FG**2** at **202***b* is opposite data line group D**4** at **218***a* in FG**1** at **202***a*. Data line group D**5** at **220***b* in FG**2** at **202***b* is opposite data line group D**5** at **220***a* in FG**1** at **202***a*. Data line group D**7** at **224***b* in FG**2** at **202***b* is opposite data line group D**6** at **222***a* in FG**1** at **202***a*.

Along ink feed slot **206**, data line group D**2** at **214***b* in FG**2** at **202***b* is along side **206***a* of ink feed slot **206** and across from or opposite data line group D**3** at **216***c* in FG**3** at **202***c* along side **206***b*. Data line group D**4** at **218***b* in FG**2** at **202***b* is opposite data line group D**4** at **218***c* in FG**3** at **202***c*. Data line group D**6** at **222***b* in FG**2** at **202***b* is opposite data line group D**5** at **220***c* in FG**3** at **202***c*, and data line group D**8** at **226***b* in FG**2** at **202***b* is opposite data line group D**6** at **222***c* in FG**3** at **202***c*.

Fire group **5** (FG**5**) **202***e* is disposed along the second parts of ink feed slots **204** and **206**. The drop generators **60** in FG**5** at **202***e* are disposed along side **204***b* of ink feed slot **204** and side **206***a* of ink feed slot **206**. Drop generators **60** in data line groups D**1**, D**3**, D**5** and D**7**, indicated at **212***e*, **216***e*, **220***e* and **224***e* are disposed along side **204***b* of ink feed slot **204** and fluidically coupled to ink feed slot **204** to receive ink from ink feed slot **204**. Drop generators **60** in data line groups D**2**, D**4**, D**6** and D**8**, indicated at **214***e*, **218***e*, **222***e* and **226***e* are disposed along side **206***a* of ink feed slot **206** to receive ink from ink feed slot **206**. The drop generators **60** in FG**5** at **202***e* are disposed between ink feed slots **204** and **206**.

In one embodiment, drop generators **60** in data line groups D**1**, D**3**, D**5** and D**7** at **212***e*, **216***e*, **220***e* and **224***e* are located along the length of side **204***b* of ink feed slot **204** and drop generators **60** in data line groups D**2**, D**4**, D**6** and D**8** at **214***e*, **218***e*, **222***e* and **226***e* are located along the length of side **206***a*

of ink feed slot **206**. Data line group D**1** at **212***e* in FG**5** at **202***e* on side **204***b* of ink feed slot **204** is across from or opposite data line group D**1** at **212***d* in FG**4** at **202***d* along side **204***a*. Data line group D**3** at **216***e* in FG**5** at **202***e* is opposite data line group D**2** at **214***d* in FG**4** at **202***d*. Data line group D**5** at **220***e* in FG**5** at **202***e* is opposite data line group D**3** at **216***d* in FG**4** at **202***d*. Data line group D**7** at **224***e* in FG**5** at **202***e* is opposite data line group D**4** at **218***d* in FG**4** at **202***d*.

Along ink feed slot **206**, data line group D**2** at **214***e* in FG**5** at **202***e* is along side **206***a* of ink feed slot **206** and across from or opposite data line group D**1** at **212***f* in FG**6** at **202***f* along side **206***b*. Data line group D**4** at **218***e* in FG**5** at **202***e* is opposite data line group D**2** at **214***f* in FG**6** at **202***f*. Data line group D**6** at **222***e* in FG**5** at **202***e* is opposite data line group D**3** at **216***f* in FG**6** at **202***f*, and data line group D**8** at **226***e* in FG**5** at **202***e* is opposite data line group D**4** at **218***f* in FG**6** at **202***f*.

In one embodiment, printhead die **200** includes **672** drop generators **60**. Each of the six fire groups **202***a*-**202***f* includes 112 drop generators **60**. Each part of a data line group D**1**-D**8** at **212**, **214**, **216**, **218**, **220**, **222**, **224** and **226** in a fire group **202***a*-**202***f* includes 14 drop generators **60**, such that each fire group **202***a*-**202***f* includes 14 row subgroups coupled to 8 data lines **108***a*-**108***h*. In other embodiments, printhead die **200** can include any suitable number of drop generators **60**, such as 600 drop generators **60**, arranged in any suitable pattern of drop generators per fire group and drop generators per data line group or part of a data line group. In addition, printhead die **200** can include any suitable number of fire groups and any suitable number of data line groups.

The conductive fire lines **208***a*-**208***f* are electrically coupled to firing resistors **52** in drop generators **60** in fire groups **202***a*-**202***f*. Fire line **208***a* is electrically coupled to each firing resistor **52** in FG**1** at **202***a*. Fire line **208***a* is disposed between one side **200***a* of printhead die **200** and ink feed slot **204** and between ink feed slots **204** and **206**. Fire line **208***a* is coupled at one end **204***c* of ink feed slot **204** to form a substantially J-shaped or substantially U-shaped fire line. The portion of fire line **208***a* disposed between side **200***a* and ink feed slot **204** is electrically coupled to firing resistors **52** in data line groups D**1**-D**6** at **212***a*, **214***a*, **216***a*, **218***a*, **220***a* and **222***a*. The portion of fire line **208***a* disposed between ink feed slot **204** and ink feed slot **206** is electrically coupled to firing resistors **52** in data line groups D**7** and D**8** at **224***a* and **226***a*. Fire line **208***a* receives and supplies energy signal FIRE **1** including energy pulses to firing resistors **52** in FG**1** at **202***a*.

Fire line **208***d* is electrically coupled to each firing resistor **52** in FG**4** at **202***d*. Fire line **208***d* is disposed between one side **200***a* of printhead die **200** and ink feed slot **204** and between ink feed slots **204** and **206**. Fire line **208***d* is coupled at one end **204***d* of ink feed slot **204** to form a substantially J-shaped or partial substantially U-shaped fire line. The portion of fire line **208***d* disposed between side **200***a* and ink feed slot **204** is electrically coupled to firing resistors **52** in data line groups D**1**-D**6** at **212***d*, **214***d*, **216***d*, **218***d*, **220***d* and **222***d*. The portion of fire line **208***d* disposed between ink feed slot **204** and ink feed slot **206** is electrically coupled to firing resistors **52** in data line groups D**7** and D**8** at **224***d* and **226***d*. Fire line **208***d* receives and supplies energy signal FIRE**4** including energy pulses to firing resistors **52** in FG**4** at **202***d*.

Fire line **208***c* is electrically coupled to each firing resistor **52** in FG**3** at **202***c*. Fire line **208***c* is disposed between one side **200***b* of printhead die **200** and ink feed slot **206** and between ink feed slots **204** and **206**. Fire line **208***c* is coupled at one end **206***c* of ink feed slot **206** to form a substantially J-shaped or partial substantially u-shaped fire line. The portion of fire line **208***c* disposed between side **200***b* and ink feed slot **206** is electrically coupled to firing resistors **52** in data line groups D**1**-D**6** at **212***c*, **214***c*, **216***c*, **218***c*, **220***c* and **222***c*. The portion of fire line **208***c* disposed between ink feed slot **204** and ink feed slot **206** is electrically coupled to firing resistors **52** in data line groups D**7** and D**8** at **224***c* and **226***c*. Fire line **208***c* receives and supplies energy signal FIRE **3** including energy pulses to firing resistors **52** in FG**3** at **202***c*.

Fire line **208***f* is electrically coupled to each firing resistor **52** in FG**6** at **202***f*. Fire line **208***f* is disposed between one side **200***b* of printhead die **200** and ink feed slot **206** and between ink feed slots **204** and **206**. Fire line **208***f* is coupled at one end **206***d* of ink feed slot **206** to form a substantially J-shaped or partial substantially U-shaped fire line. The portion of fire line **208***f* disposed between side **200***b* and ink feed slot **206** is electrically coupled to firing resistors **52** in data line groups D**1**-D**6** at **212***f*, **214***f*, **216***f*, **218***f*, **220***f* and **222***f*. The portion of fire line **208***f* disposed between ink feed slot **204** and ink feed slot **206** is electrically coupled to firing resistors **52** in data line groups D**7** and D**8** at **224***f* and **226***f*. Fire line **208***f* receives and supplies energy signal FIRE**6** including energy pulses to firing resistors **52** in FG**6** at **202***f*.

Fire line **208***b* is electrically coupled to each firing resistor **52** in FG**2** at **202***b*. Fire line **208***b* is disposed between ink feed slots **204** and **206**. One section **230** of fire line **208***b* is located across firing cells **70** in data line groups D**1**, D**3**, D**5** and D**7** at **212***b*, **216***b*, **220***b* and **224***b* next to ink feed slot **204** and another section **232** of fire line **208***b* is located across firing cells **70** in data line groups D**2**, D**4**, D**6** and D**8** at **214***b*, **218***b*, **222***b* and **226***b* next to ink feed slot **206**. The sections **230** and **232** are electrically coupled together at **234** between ink feed slots **204** and **206** and a third section or post section **236** of fire line **208***b* is electrically coupled to the first and second sections **230** and **232** and extends toward side **200***c* of printhead die **200**. Fire line **208***b* receives and supplies energy signal FIRE **2** including energy pulses to firing resistors **52** in FG**2** at **202***b*.

Fire line **208***e* is electrically coupled to each firing resistor **52** in FG**5** at **202***e*. Fire line **208***e* is disposed between ink feed slots **204** and **206**. One section **240** of fire line **208***e* is located across firing cells **70** in data line groups D**1**, D**3**, D**5** and D**7** at **212***e*, **216***e*, **220***e* and **224***e* next to ink feed slot **204** and another section **242** of fire line **208***e* is located across firing cells **70** in data line groups D**2**, D**4**, D**6** and D**8** at **214***e*, **218***e*, **222***e* and **226***e* next to ink feed slot **206**. The sections **240** and **242** are electrically coupled together at **244** between ink feed slots **204** and **206** and a third section or post section **246** of fire line **208***e* is electrically coupled to first and second sections **240** and **242** and extends toward side **200***d* of printhead die **200**. Fire line **208***e* receives and supplies energy signal FIRE**5** including energy pulses to firing resistors **52** in FG**5** at **202***e*.

Enable lines **210** are electrically coupled to firing cells **70** in row subgroups in fire groups **202***a*-**202***f*. The enable lines **210** are electrically coupled to firing cells **70** in row subgroups as previously described for enable lines **106***a*-**106**L. Enable lines **210** receive subgroup enable signals SG**1**, SG**2**, . . . SG_L and provide the received signals to firing cells **70** in row subgroups. The subgroup enable signals SG**1**, SG**2**, . . . SG_L enable one row subgroup of firing cells **70** to receive and store data signals D**1**-D**8** provided on data lines **108***a*-**108***h*.

The enable lines **210** are located between ink feed slot **204** and printhead die side **200***a* and between ink feed slot **206** and printhead die side **200***b*. In addition, enable lines **210** are routed between ink feed slots **204** and **206**. The enable lines **210** extend along one side **200***c* of printhead die **200**. In one embodiment, some of the enable lines **210** are divided into two groups of enable lines. One group provides enable signals

to fire groups **202***a*-**202***c* and another group provides enable signals to fire groups **202***d*-**202***f*.

FIG. **7** is a block diagram illustrating one embodiment of a layout of a reference conductor **250** in printhead die **200**. The printhead die **200** includes the six fire groups **202***a*-**202***f*, two ink feed slots **204** and **206** and reference conductor **250**. The reference conductor **250** is electrically coupled to each of the firing cells **70** in each of the fire groups **202***a*-**202***f*. The drain-source path of each drive switch **72** in each of the firing cells **70** is electrically coupled to reference conductor **250**. In addition, reference conductor **250** is electrically coupled to a reference voltage, such as ground. In one embodiment, reference conductor **250** is coupled through external contacts to external circuitry or ground paths. (See, FIG. **15**).

The fire groups **202***a*-**202***f* are disposed along ink feed slots **204** and **206**. Fire groups **202***a* and **202***d* are located along ink feed slot **204**, and fire groups **202***c* and **202***f* are located along ink feed slot **206**. Fire groups **202***b* and **202***e* are located along both ink feed slots **204** and **206**.

The fire groups **202***a*-**202***f* are divided into eight data line groups D**1**-D**8**, indicated at **212**, **214**, **216**, **218**, **220**, **222**, **224** and **226**. Each data line group D**1**-D**8** at **212**, **214**, **216**, **218**, **220**, **222**, **224** and **226** includes firing cells **70** from each fire group **202***a*-**202***f*. Each firing cell **70** in a data line group D**1**-D**8** at **212**, **214**, **216**, **218**, **220**, **222**, **224** and **226** is electrically coupled to the corresponding one of eight data lines **108***a*-**108***h*. The fire groups **202***a*-**202***f* and data line groups D**1**-D**8** at **212**, **214**, **216**, **218**, **220**, **222**, **224** and **226** are disposed along ink feed slots **204** and **206** as previously described in detail herein.

The ink feed slots **204** and **206** are spaced apart and parallel to one another. Each ink feed slot **204** and **206** includes a length that extends along the y-direction of printhead die **200**. Ink feed slot **204** includes opposing sides **204***a* and **204***b* along the length of ink feed slot **204**, and ink feed slot **206** includes opposing sides **206***a* and **206***b* along the length of ink feed slot **206**. The ink feed slots **204** and **206** supply ink to drop generators **60** in fire groups **202***a*-**202***f*.

The reference conductor **250** includes a first portion **250***a*, a second portion **250***b*, a third portion **250***c* and a fourth portion **250***d* electrically coupled together at each end of ink feed slots **204** and **206**. The reference conductor **250** is disposed along each of the opposing sides **204***a* and **204***b* of ink feed slot **204**, and along each of the opposing sides **206***a* and **206***b* of ink feed slot **206**. The portions **250***a*-**250***d* are electrically coupled together along side **200***c* of printhead die **200** and along side **200***d* of printhead die **200**.

The first portion **250***a* of reference conductor **250** is situated across each firing cell **70** in data line groups D**1**-D**6** at **212***a*, **214***a*, **216***a*, **218***a*, **220***a* and **222***a* in FG**1** at **202***a*. The first portion **250***a* of reference conductor **250** is also situated across each firing cell **70** in data line groups D**1**-D**6** at **212***d*, **214***d*, **216***d*, **218***d*, **220***d* and **222***d* in FG**4** at **202***d*. The first portion **250***a* is positioned along side **204***a* of ink feed slot **204** and between ink feed slot **204** and side **200***a* of printhead die **200**.

The second portion **250***b* of reference conductor **250** is situated across each firing cell **70** in data line groups D**7** and D**8** at **224***a* and **226***a* in FG**1** at **202***a*, data line groups D**1**, D**3**, D**5** and D**7** at **212***b*, **216***b*, **220***b* and **224***b* in FG**2** at **202***b*, data line groups D**1**, D**3**, D**5** and D**7** at **212***e*, **216***e*, **220***e* and **224***e* in FG**5** at **202***e* and data line groups D**7** and D**8** at **224***d* and **226***d* in FG**4** at **202***d*. The second portion **250***b* is situated along side **204***b* of ink feed slot **204** and between ink feed slots **204** and **206**.

The third portion **250***c* of reference conductor **250** is situated across each firing cell **70** in data line groups D**7** and D**8** at **224***c* and **226***c* in FG**3** at **202***c*, data line groups D**2**, D**4**, D**6** and D**8** at **214***b*, **218***b*, **222***b* and **226***b* in FG**2** at **202***b*, data line groups D**2**, D**4**, D**6**, D**8** at **214***e*, **218***e*, **222***e* and **226***e* in FG**5** at **202***e* and data line groups D**7** and D**8** at **224***f* and **226***f* in FG**6** at **202***f*. The third portion **250***c* is situated along side **206***a* of ink feed slot **206** and between ink feed slots **204** and **206**.

The fourth portion **250***d* of reference conductor **250** is situated across each firing cell **70** in data line groups D**1**-D**6** at **212***c*, **214***c*, **216***c*, **218***c*, **220***c* and **222***c* in FG**3** at **202***c* and data line groups D**1**-D**6** at **212***f*, **214***f*, **216***f*, **218***f*, **220***f* and **222***f* in FG**6** at **202***f*. The fourth portion **250** is situated along side **206***b* of ink feed slot **206** and between ink feed slot **206** and side **200***b* of printhead die **200**. The portions **250***a*-**250***d* of reference conductor **250** are electrically coupled together along sides **200***c* and **200***d* of printhead die **200**.

FIG. **8** is a plan view diagram illustrating one embodiment of a section **300** taken at the first metal layer of printhead die **200**, depicting overlapping and non-overlapping regions from multiple layers. The actual structures described may be formed in one or more layers.

The section **300** includes three firing cells, indicated at **302***a*-**302***c*, ink feed slot **206** and reference conductor **250**. The three firing cells **302***a*-**302***c* are similar to firing cells **70** throughout printhead die **200** and instances of firing cells **70** that are part of data line group D**7** at **224***c* in FG**3** at **202***c*. The firing cells **302***a*-**302***c* include memory circuits **74***a*-**74***c*, drive switches **72***a*-**72***c* and firing resistors, indicated at **52***a*-**52***c*.

The firing cell **302***a* includes memory circuit **74***a*, drive switch **72***a* and firing resistor **52***a*. The firing resistor **52***a* includes a first resistive segment **304***a*, a second resistive segment **306***a* and a conductive shorting bar **308***a*. The first resistive segment **304***a* and second resistive segment **306***a* are separate resistive segments electrically coupled together through conductive shorting bar **308***a*. The memory circuit **74***a* is electrically coupled to the gate of drive switch **72***a* through a substrate lead **310***a*. One side of the drain-source path of drive switch **72***a* is electrically coupled to reference conductor **250**. The reference conductor **250** contacts drive switch **72***a* where the reference conductor **250** is disposed over, e.g. in a layer above, at least a portion of drive switch **72***a*. The other side of the drain-source path of drive switch **72***a* is electrically coupled to a drive switch conductive lead **312***a* that electrically couples the drain-source path of drive switch **72***a* to first resistive segment **304***a*. The second resistive segment **306***a* is electrically coupled to fire line **208***c* through fire line conductive lead **314***a*.

The firing cell **302***b* includes memory circuit **74***b*, drive switch **72***b* and firing resistor **52***b*. The firing resistor **52***b* includes a first resistive segment **304***b*, a second resistive segment **306***b* and a conductive shorting bar **308***b*. The first resistive segment **304***b* and second resistive segment **306***b* are separate resistive segments electrically coupled together through shorting bar **308***b*. The memory circuit **74***b* is electrically coupled to the gate of drive switch **72***b* through a substrate lead **310***b*. One side of the drain-source path of drive switch **72***b* is electrically coupled to reference conductor **250**. The reference conductor **250** contacts drive switch **72***b* where the reference conductor **250** is disposed over a portion of drive switch **72***b*. The other side of the drain-source path of drive switch **72***b* is electrically coupled to a drive switch conductive lead **312***b* that electrically couples the drain-source path of drive switch **72***b* to first resistive segment **304***b*. The second resistive segment **306***b* is electrically coupled to fire line **208***c* through fire line conductive lead **314***b*.

The firing cell **302***c* includes memory circuit **74***c*, drive switch **72***c* and firing resistor **52***c*. The firing resistor **52***c* includes a first resistive segment **304***c*, a second resistive segment **306***c* and a conductive shorting bar **308***c*. The first resistive segment **304***c* and second resistive segment **306***c* are separate resistive segments electrically coupled together through shorting bar **308***c*. The memory circuit **74***c* is electrically coupled to the gate of drive switch **72***c* through a substrate lead **310***c*. The drain-source path of drive switch **72***c* is electrically coupled to reference conductor **250**. The reference conductor **250** contacts the drive switch **72***c* where the reference conductor **250** is disposed over a portion of drive switch **72***c*. The other side of the drain-source path of drive switch **72***c* is electrically coupled to a drive switch conductive lead **312***c* that electrically couples the drain-source path of drive switch **72***c* to first resistive segment **304***c*. The second resistive segment **306***c* is electrically coupled to fire line **208***c* through fire line conductive lead **314***c*.

The firing cells **302***a*-**302***c* are formed in and on semiconductor substrate **320** of printhead die **200**. The memory circuits **74***a*-**74***c*, drive switches **72***a*-**72***c* and substrate leads **310***a*-**310***c* are formed in substrate **320** of printhead die **200**. The reference conductor **250**, drive switch conductive leads **312***a*-**312***c*, fire line conductive leads **314***a*-**314***c* and shorting bars **308***a*-**308***c* are formed as part of the first metal layer that is formed on substrate **320**. In addition, first resistive segments **304***a*-**304***c* and second resistive segments **306***a*-**306***c* are formed as part of a resistive layer. In other embodiments, portions of reference conductor **250** may be formed in both first metal layer and second metal layer (not shown).

The ink feed slot **206** is formed in substrate **320** and provides ink to firing resistors **52***a*-**52***c*. The ink feed slot **206** includes an ink feed slot edge **322** at the surface of substrate **320**. The ink feed slot edge **322** is in communication with the surface of substrate **320** along the length of ink feed slot **206**. The reference conductor **250**, at **324** is disposed along ink feed slot **206** and spaced apart from ink feed slot edge **322**. Opposing side **206***a* of ink feed slot **206** includes ink feed slot edge **322** and opposing side **206***b* of ink feed slot **206** includes an ink feed slot edge similar to ink feed slot edge **322**. In addition, each of the opposing sides **204***a* and **204***b* of ink feed slot **204** includes an ink feed slot edge in communication with the surface of substrate **320** and similar to ink feed slot edge **322**.

Portions of reference conductor **250** are formed in first metal layer, other portions may or may not be formed in second metal layer, and disposed between memory circuits **74***a*-**74***c* and ink feed slot **206**. The drive switch conductive leads **312***a*-**312***c*, fire line conductive leads **314***a*-**314***c* and firing resistors **52***a*-**52***c* are isolated from reference conductor **250** and disposed in firing resistor areas **326***a*-**326***c*. Firing resistor area **326***a* includes drive switch conductive lead **312***a*, fire line conductive lead **314***a* and firing resistor **52***a*. Firing resistor area **326***b* includes drive switch conductive lead **312***b*, fire line conductive lead **314***b* and firing resistor **52***b*. Firing resistor area **326***c* includes drive switch conductive lead **312***c*, fire line conductive lead **314***c* and firing resistor **52***c*.

The reference conductor **250** is disposed over a portion of each of the drive switches **72***a*-**72***c* between memory circuits **74***a*-**74***c* and firing resistor areas **326***a*-**326***c*, including drive switch conductive leads **312***a*-**312***c*. The reference conductor **250** is also disposed between ink feed slot edge **322** and firing resistor areas **326***a*-**326***c*, including firing resistors **52***a*-**52***c*. In addition, the reference conductor **250** is disposed between firing resistor areas **326***a*-**326***c* of adjacent firing cells **302***a*-**302***c*. The reference conductor **250** is substantially planar between memory circuits **74***a*-**74***c* and ink feed slot edge **322**. The reference conductor **250** has a larger or increased area due to the portion of reference conductor **250** that is disposed between ink feed slot edge **322** and firing resistor areas **326***a*-**326***c*. The larger area reference conductor **250** reduces the energy variation between firing cells **70** and provides a more uniform ink pattern.

In the above described embodiment, the reference conductor **250** is disposed between ink feed slot edge **322** and firing resistor areas **326***a*-**326***c* and is also disposed between and substantially planar with firing resistors areas **326***a*-**326***c* of adjacent firing cells **302***a*-**302***c*. In this embodiment, the reference conductor **250** is substantially planar with firing resistors **52***a*-**52***c* but not the ink feed slot edge. In one embodiment, the ink feed slot edge is also planar with reference conductor **250**. In one embodiment, the firing resistors **52***a*-**52***c* are not substantially planar with reference conductor **250**. Nevertheless, in all of these embodiments, the reference conductor is disposed between the ink feed slot edge and the firing resistors and is also disposed between the firing resistor areas of adjacent firing cells regardless of planar relationships.

In operation, one of the firing cells **302***a*-**302***c* is fired or energized at a time. In one example operation, memory circuit **74***a* provides a voltage level on the gate of drive switch **72***a* to turn drive switch **72***a* on or off. Fire line **208***c* receives energy signal FIRE **3** and provides an energy pulse to second resistive segment **306***a* through fire line conductive lead **314***a*.

If drive switch **72***a* is conducting, the energy pulse provides a current through firing resistor **52***a*, drive switch conductive lead **312***a* and drive switch **72***a* to reference conductor **250**. With reference conductor **250** electrically coupled to a reference voltage, such as ground, the current flows through reference conductor **250** to ground.

As the current flows through reference conductor **250**, the current flows between memory circuits **74***a*-**74***c* and firing resistor areas **326***a*-**326***c*, including drive switch conductive leads **312***a*-**312***c*. The current also flows between adjacent firing resistor areas **326***a*-**326***c* and between ink feed slot edge **322** and firing resistor areas **326***a*-**326***c*, including firing resistors **52***a*-**52***c*.

The layout of firing cells **302***a*-**302***c* in section **300** is similar to the layout of firing cells **70** along ink feed slots **204** and **206** throughout printhead die **200**. In addition, the layout of reference conductor **250** in section **300** is similar to the layout of reference conductor **250** along opposing sides **204***a* and **204***b* of ink feed slot **204** and along opposing sides **206***a* and **206***b* of ink feed slot **206** throughout printhead die **200**.

FIGS. **9**A and **9**B are diagrams illustrating partial cross-sections of one embodiment of printhead die **200** taken at the positions of lines **9**A and **9**B, respectively, in FIG. **8**. FIGS. **9**A and **9**B are not drawn to scale for clarity.

Referring to FIGS. **9**A and **9**B, printhead die **200** includes an orifice layer **400**, a first metal layer **402**, a second metal layer **404**, an isolation layer **406** and substrate **320**. Drive switch **72***a* and ink feed slot **206** are formed in substrate **320** that includes a substrate surface **320***a*. The ink feed slot **206** includes ink feed slot edge **322** in communication with substrate surface **320***a*. The first metal layer **402** is formed on substrate surface **320***a*. Isolation layer **406** is formed on first metal layer **402** and substrate surface **320***a*.

The orifice layer **400** has a front face **400***a* and a nozzle opening **412** in the front face **400***a*. Orifice layer **400** also has a nozzle chamber or vaporization chamber **414** and a fluid path or ink feed path **416** formed therein. The firing resistor, indicated at **52***a*, is located at least partially under vaporization chamber **414**, which is between firing resistor **52***a* and

nozzle opening **412**. The ink feed path **416** is located between vaporization chamber **414** and ink feed channel **410**. The vaporization chamber **414** communicates with nozzle opening **412** and ink feed path **416**. The ink feed path **416** communicates with vaporization chamber **414** and ink feed channel **410** that communicates with ink feed slot **206**. The ink feed slot **206** supplies ink to vaporization chamber **414** through ink feed channel **410** and ink feed path **416**.

The first metal layer **402** is formed on substrate **320** and insulated from second metal layer **404** by isolation layer **406**. The first metal layer **402** includes a conductive layer **418** and a resistive layer **420**. The conductive layer **418** is made of a suitable conductive material, for example aluminum-copper, and the resistive layer **420** is made of a suitable resistive material, for example tantalum-aluminum. The first metal layer **402** includes multiple leads and components in printhead die **200**, including reference conductor **250**, drive switch conductive lead **312***a*, fire line conductive lead **314***a* and firing resistor **52***a*.

The firing resistor **52***a* is made from first metal layer **402** and includes second resistive segment **306***a* and shorting bar **308***a*. The second resistive segment **306***a* includes resistive layer **420**. Conductive layer **418** is not disposed on second resistive segment **306***a*. The shorting bar **308***a* includes conductive layer **418** and resistive layer **420**. The second resistive segment **306***a* is electrically coupled to shorting bar **308***a* and fire line conductive lead **314***a*.

The fire line conductive lead **314***a* is made from first metal layer **402** and includes conductive layer **418** and resistive layer **420**. The fire line conductive lead **314***a* is electrically coupled to second metal layer **404** through via **422** formed in isolation layer **406**. The via **422** in isolation layer **406** is filled with material to electrically couple fire line conductive lead **314***a* to second metal layer **404**.

The reference conductor **250** is disposed on substrate **320** over a portion of drive switch **72***a* and between firing resistor **52***a* and ink feed slot edge **322**. The reference conductor **250** is electrically coupled to one side of the drain-source path of drive switch **72***a*. The other side of the drain-source path of drive switch **72***a* is electrically coupled to drive switch conductive lead **312***a* that is electrically coupled to first resistive segment **304***a* (shown in FIG. **9**B) of firing resistor **52***a*. The reference conductor **250** and drive switch conductive lead **312***a* are formed as part of first metal layer **402** and include conductive layer **418** and resistive layer **420**.

In one embodiment, isolation layer **406** comprises an insulating passivation layer disposed over first metal layer **402**, including reference conductor **250** and firing resistor **52***a*. The isolation layer **406** is disposed along ink feed slot edge **322**. The isolation layer **406** covers reference conductor **250** between firing resistor **52***a* and ink feed slot edge **322** and prevents ink from touching and corroding reference conductor **250**.

In one embodiment, isolation layer **406** is disposed over shorting bar **308***a* and second resistive segment **306***a* and prevents ink from touching and corroding shorting bar **308***a* and second resistive segment **306***a*. In one embodiment, isolation layer **406** is disposed over fire line conductive lead **314***a*, drive switch conductive lead **312***a* and the portion of reference conductor **250** disposed over drive switch **72***a*. Via **422** is etched in isolation layer **406** to electrically couple fire line conductive lead **314***a* (first metal layer **402**) and second metal layer **404**. The isolation layer **406** is formed as part of a suitable insulating material. In one embodiment, isolation layer **406** includes two layers, for example a silicon-carbide layer and a silicon-nitride layer.

The second metal layer **404** includes fire line **208***c* that is electrically coupled through via **422** to fire line conductive lead **314***a*. The second metal layer **404** includes a first layer **424**, made from a suitable material, for example tantalum, and a second layer **426** made from a suitable conductive material, for example gold. The first layer **424** is disposed to make contact with fire line conductive lead **314***a* through via **422**. In addition, the first layer **424** is disposed at **428** on isolation layer **406** over second resistive segment **306***a*. The first layer **424** at **428** protects isolation layer **406** as ink is heated by firing resistor **52***a*. The second layer **426** is a conductive gold layer disposed on first layer **424** to form fire line **208***c*. The fire line **208***c* receives energy signal FIRE **3** and provides energy pulses to second resistive segment **306***a* and firing resistor **52***a* to heat and eject ink from vaporization chamber **414** through nozzle **412**.

Referring to FIG. **9**B, firing resistor **52***a* is made from first metal layer **402** and includes first resistive segment **304***a* and shorting bar **308***a*. The first resistive segment **304***a* includes resistive layer **420**. Conductive layer **418** is not disposed on first resistive segment **304***a*. The first resistive segment **304***a* is electrically coupled to shorting bar **308***a* and drive switch conductive lead **312***a*.

In one embodiment, isolation layer **406** is disposed over shorting bar **308***a* and first resistive segment **304***a*. In one embodiment, isolation layer **406** is disposed overdrive switch conductive lead **312***a* and a portion of reference conductor **250** disposed over drive switch **72***a*.

The first layer **424** of second metal layer **404** is disposed at **428** on isolation layer **406** over first resistive segment **304***a*. The first layer **424** at **428** protects the isolation layer **406** as ink is heated by firing resistor **52***a*.

In operation, memory circuit **74***a* is enabled and receives data to turn drive switch **72***a* on or off. The memory circuit **74***a* provides a voltage on the gate of drive switch **72***a* to either turn drive switch **72***a* on (conducting) or off (non-conducting). An energy pulse is received on fire line **208***c* and provided to second resistive segment **306***a*. If drive switch **72***a* is conducting, the energy pulse creates an energy current that flows through fire line **208***c* and fire line conductive lead **314***a* to second resistive segment **306***a*. The current flows through the second resistive segment **306***a* and shorting bar **308***a* to first resistive segment **304***a* and drive switch conductive lead **312***a*. The current flows through the conducting drain-source path of drive switch **72***a* to reference conductor **250** and out of printhead die **200**. As the current flows through reference conductor **250**, the current flows between firing resistor areas **326***a*-**326***c* and to the portion of reference conductor **250** between firing resistors **52***a* and ink feed slot edge **322**.

In the embodiment depicted in FIGS. **9**A and **9**B, conductive layer **418** has a height that is in a range of 0.3-1.5 um, which in an exemplary embodiment is 0.5 um, and resistive layer **420** is in a range of 0.3-1.5 um, which in an exemplary embodiment is 0.5 um. In this embodiment, first layer **424** has a height that is in a range of 0.3-1.5 um, which in an exemplary embodiment is 0.36 um, and second layer **426** that has a height similar to that of resistive layer **420**.

An embodiment of the location of fire lines, and ground lines, address lines in metal layer **1** and metal layer **2** is depicted and disclosed in co-pending patent application Ser. No. 10/787,573 which is incorporated by reference in its entirety.

FIG. **10** is a diagram illustrating one embodiment of section **300** of printhead die **200** at the position of line **10** in FIG. **9**B. The printhead die **200** includes ink feed slot **206**, fluid paths or ink feed paths **416***a*-**416***c* and vaporization chambers, indicated at **414***a*-**414***c*. The ink feed paths **416***a*-**416***c*

and vaporization chambers **414***a*-**414***c* correspond to firing cells **302***a*-**302***c*. Ink feed path **416***a* and vaporization chamber **414***a* correspond to firing cell **302***a*. Ink feed path **416***b* and vaporization chamber **414***b* correspond to firing cell **302***b*, and ink feed path **416***c* and vaporization chamber **414***c* correspond to firing cell **302***c*.

The vaporization chambers **414***a*-**414***c* include first layer **424** at **428***a*-**428***c* over first resistive segments **304***a*-**304***c* and second resistive segments **306***a*-**306***c*. Vaporization chamber **414***a* includes first layer **424** at **428***a* over first resistive segment **304***a* and second resistive segment **306***a*. Vaporization chamber **414***b* includes first layer **424** at **428***b* over first resistive segment **304***b* and second resistive segment **306***b*. Vaporization chamber **414***c* includes first layer **424** at **428***c* over first resistive segment **304***c* and second resistive segment **306***c*.

The reference conductor **250** is situated on each side of firing resistor areas **326***a*-**326***c*. The reference conductor **250** is situated between firing resistor areas **326***a*-**326***c* and a memory circuit and routing channel area, indicated at **430**. The reference conductor **250** is also situated between adjacent firing resistor areas **326***a*-**326***c*. In addition, reference conductor **250** is disposed under ink feed paths **416***a*-**416***c* and between firing resistor areas **326***a*-**326***c* and ink feed slot edge **322**. The reference conductor **250** at **324** is located next to ink feed slot edge **322** along the length of ink feed slot **206**.

Ink feed slot **206** is fluidically coupled to ink feed paths **416***a*-**416***c*, which are fluidically coupled to vaporization chambers **414***a*-**414***c*, respectively. The reference conductor **250** is isolated by isolation layer **406** from ink flowing from ink feed slot **206** through ink feed paths **416***a*-**416***c*. Ink from ink feed slot **206** flows through ink feed paths **416***a*-**416***c* to vaporization chambers **414***a*-**414***c* over isolation layer **406** that covers reference conductor **250**.

FIG. **11** is a block diagram illustrating a layout of fire lines **208***a*-**208***f* in one embodiment of printhead die **200**. The printhead die **200** includes fire lines **208***a*-**208***f*, data lines **108***a*-**108***h* and ink feed slots **204** and **206**. Each of the fire lines **208***a*-**208***f* corresponds to one of the fire groups **202***a*-**202***f* and is electrically coupled to all firing resistors **52** in the corresponding fire group **202***a*-**202***f*. Each of the data lines **108***a*-**108***h* corresponds to one of the data line groups **212**, **214**, **216**, **218**, **220**, **222**, **224** and **226** and is electrically coupled to all firing cells **70** in the corresponding data line group **212**, **214**, **216**, **218**, **220**, **22**, **224** and **226**. Each of the data lines **108***a*-**108***h* is electrically coupled to firing cells **70** in each of the fire groups **202***a*-**202***f*.

Data lines **108***a*-**108***h* receive data signals D**1**-D**8** and supply the data signals D**1**-D**8** to firing cells **70** in each of the fire groups **202***a*-**202***f*. Data line **108***a* receives data signal D**1** and supplies data signal D**1** to data line group **212** in each of the fire groups **202***a*-**202***f*. Data line **108***b* receives data signal D**2** and supplies data signal D**2** to data line group **214** in each of the fire groups **202***a*-**202***f*. Data line **108***c* receives data signal D**3** and supplies data signal D**3** to data line group **216** in each of the fire groups **202***a*-**202***f*. Data line **108***d* receives data signal D**4** and supplies data signal D**4** to data line group **218** in each of the fire groups **202***a*-**202***f*. Data line **108***e* receives data signal D**5** and supplies data signal D**5** to data line group **220** in each of the fire groups **202***a*-**202***f*. Data line **108***f* receives data signal D**6** and supplies data signal D**6** to data line group **222** in each of the fire groups **202***a*-**202***f*. Data line **108***g* receives data signal D**7** and supplies data signal D**7** to data line group **224** in each of the fire groups **202***a*-**202***f*. Data line **108***h* receives data signal D**8** and supplies data signal D**8** to data line group **226** in each of the fire groups **202***a*-**202***f*.

The data lines **108***a*-**108***h* are disposed along ink feed slots **204** and **206** in printhead die **200**. Portions of data lines **108***a*-**108***f* are disposed along ink feed slot **204** and between ink feed slot **204** and printhead die side **200***a*. Other portions of data lines **108***a*-**108***f* are disposed along ink feed slot **206** and between ink feed slot **206** and printhead die side **200***b*. Also, portions of data lines **108***a*, **108***c*, **108***e*, **108***g* and **108***h* are disposed along ink feed slot **204**, between ink feed slot **204** and ink feed slot **206** and portions of data lines **108***b*, **108***d*, **108***f*, **108***g* and **108***h* are disposed along ink feed slot **206**, between ink feed slot **206** and ink feed slot **204**.

The portions of data lines **108***a*-**108***f* disposed between ink feed slot **204** and printhead die side **200***a* are electrically coupled to firing cells **70** in data lines groups **212***a*, **214***a*, **216***a*, **218***a*, **220***a* and **222***a* in FG**1** at **202***a*, and to firing cells **70** in data line groups **212***d*, **214***d*, **216***d*, **218***d*, **220***d* and **222***d* in FG**4** at **202***d*. Data line **108***a* is electrically coupled to firing cells **70** in data line groups **212***a* and **212***d*. Data line **108***b* is electrically coupled to firing cells **70** in data line groups **214***a* and **214***d*. Data line **108***c* is electrically coupled to firing cells **70** in data line groups **216***a* and **216***d*. Data line **108***d* is electrically coupled to firing cells **70** in data line groups **218***a* and **218***d*. Data line **108***e* is electrically coupled to firing cells in data line groups **220***a* and **220***d*. Data line **108***f* is electrically coupled to firing cells **70** in data line groups **222***a* and **222***d*.

The portions of data lines **108***a*-**108***f* disposed between ink feed slot **206** and printhead die side **200***b* are electrically coupled to firing cells **70** in data line groups **212***c*, **214***c*, **216***c*, **218***c*, **220***c* and **222***c* in FG**3** at **202***c* and to firing cells **70** in data line groups **212***f*, **214***f*, **216***f*, **218***f*, **220***f* and **222***f* in FG**6** at **202***f*. Data line **108***a* is electrically coupled to firing cells **70** in data line groups **212***c* and **212***f*. Data line **108***b* is electrically coupled to firing cells **70** in data line groups **214***c* and **214***f*. Data line **108***c* is electrically coupled to firing cells in data line groups **216***c* and **216***f*. Data line **108***d* is electrically coupled to firing cells **70** in data line groups **218***c* and **218***f*. Data line **108***e* is electrically coupled to firing cells **70** in data line groups **220***c* and **220***f*. Data line **108***f* is electrically coupled to firing cells **70** in data line groups **222***c* and **222***f*.

The portions of data lines **108***a*, **108***c*, **108***e*, **108***g* and **108***h* disposed along ink feed slot **204**, between ink feed slot **204** and ink feed slot **206**, are electrically coupled to firing cells **70** in FG**1** at **202***a*, FG**2** at **202***b*, FG**4** at **202***d* and FG**5** at **202***e*. Data line **108***a* is electrically coupled to firing cells in data line groups **212***b* and **212***e*. Data line **108***c* is electrically coupled to firing cells **70** in data line groups **216***b* and **216***e*. Data line **108***e* is electrically coupled to firing cells **70** in data line groups **220***b* and **220***e*. Data line **108***g* is electrically coupled to firing cells **70** in data line groups **224***a*, **224***b*, **224***d* and **224***e*. Data line **108***h* is electrically coupled to firing cells **70** in data line groups **226***a* and **226***d*.

The portions of data lines **108***b*, **108***d*, **108***f*, **108***g* and **108***h* disposed along ink feed slot **206** and between ink feed slot **206** and ink feed slot **204** are electrically coupled to firing cells **70** in FG**2** at **202***b*, FG**3** at **202***c*, FG**5** at **202***e* and FG**6** at **202***f*. Data line **108***b* is electrically coupled to firing cells **70** in data line groups **214***b* and **214***e*. Data line **108***d* is electrically coupled to firing cells **70** in data line groups **218***b* and **218***e*. Data line **108***f* is electrically coupled to firing cells **70** in data line groups **222***b* and **222***e*. Data line **108***g* is electrically coupled to firing cells **70** in data line groups **224***c* and **224***f*, and data line **108***h* is electrically coupled to firing cells **70** in data line groups **226***b*, **226***c*, **226***e* and **226***f*.

The fire lines **208***a*-**208***f* receive energy signals FIRE **1**, FIRE **2**, . . . FIRE**6** and supply the energy signals FIRE **1**, FIRE **2** . . . FIRE**6** to firing cells **70** in fire groups **202***a*-**202***f*. Fire line **208***a* receives energy signal FIRE **1** and supplies the energy signal FIRE **1** to all firing cells **70** in FG**1** at **202***a*. Fire

line **208***b* receives energy signal FIRE **2** and supplies the energy signal FIRE **2** to all firing cells **70** in FG**2** at **202***b*. Fire line **208***c* receives energy signal FIRE **3** and supplies the energy signal FIRE **3** to all firing cells **70** in FG**3** at **202***c*. Fire line **208***d* receives energy signal FIRE**4** and supplies the energy signal FIRE**4** to all firing cells **70** in FG**4** at **202***d*. Fire line **208***e* receives energy signal FIRE**5** and supplies the energy signal FIRE**5** to all firing cells **70** in FG**5** at **202***e*. Fire line **208***f* receives energy signal FIRE**6** and supplies the energy signal FIRE**6** to all firing cells **70** in FG**6** at **202***f*.

Each fire line **208***a*-**208***f* supplies energy to firing resistors **52** that are coupled to conducting drive switches **72**. Energy is supplied to firing resistors **52** through the energy signals FIRE **1**, FIRE **2**, . . . FIRE**6**. The energy heats the firing resistors **52** to heat and eject ink from drop generators **60**. Variations in the amount of energy supplied to firing resistors **52** can result in ink drops that are not uniform in size and shape, resulting in a distorted printed image. To uniformly eject ink, each fire line **208***a*-**208***f* is configured to maintain a suitable energy variation between firing resistors **52**.

Energy variation is the maximum percent difference in power dissipated through any two firing resistors **52** in one of the fire groups **202***a*-**202***f*. The highest power is generally provided to the firing resistor **52** nearest the bond pad receiving the energy signal FIRE **1**, FIRE **2**, . . . FIRE**6** as only a single firing resistor **52** is energized. The lowest power is generally provided to the firing resistor **52** that is the furthest from the bond pad receiving the energy signal FIRE **1**, FIRE **2**, . . . FIRE**6** as all firing resistors **52** in a row subgroup are energized. Layout contributions to energy variation include fire line length, fire line width, fire line conductor thickness and ground line, e.g. reference conductor **250**, dimensions. In an exemplary embodiment, the ground line portions, e.g. each of reference conductor portions **250***a*, **250***b*, **250***c*, and **250***d*, are less than 800 um wide, an in one embodiment about 96 μum wide. In this exemplary embodiment, fire lines may be between 50 and 500 um wide. These dimensions are for one exemplary embodiment; other embodiments may employ other sizes and dimensions. Energy variations of 10-15% are preferred and energy variations up to 20% have been found to be suitable energy variations.

The fire groups **202***a*-**202***f* and fire lines **208***a*-**208***f* are disposed in printhead die **200** to achieve a suitable energy variation between firing resistors **52**. Instead of all firing cells **70** in one fire group **202***a*-**202***f* being disposed along one side of one ink feed slot **204** or **206**, resulting in a long fire line **208***a*-**208***f*, the firing cells **70** in one fire group **202***a*-**202***f* are disposed along opposing sides of one ink feed slot **204** or **206**, or along both ink feed slots **204** and **206**. This reduces the length of the corresponding fire line **208***a*-**208***f*.

The firing cells **70** in fire group **202***a* are disposed along opposing sides of ink feed slot **204** and the firing cells **70** in fire group **202***d* are also disposed along opposing sides of ink feed slot **204**. Each of the fire lines **208***a* and **208***d* is disposed along the opposing sides of ink feed slot **204** and joined at one end **204***c* or **204***d* of ink feed slot **204**. Each fire line **208***a* and **208***d* is longer along one side of ink feed slot **204**, as compared to along the other side of ink feed slot **204**, to form substantially J-shaped fire lines **208***a* and **208***d*.

The firing cells **70** in fire group **202***c* are disposed along opposing sides of ink feed slot **206** and the firing cells **70** in fire group **202***f* are also disposed along opposing sides of ink feed slot **206**. Each fire line **208***c* and **208***f* is disposed along opposing sides of ink feed slot **206** and joined at one end **206***c* or **206***d* of ink feed slot **206**. Each fire line **208***c* and **208***f* is longer along one side of ink feed slot **206**, as compared to along the other side of ink feed slot **206**, to form substantially J-shaped fire lines **208***c* and **208***f*.

The firing cells **70** in fire group **202***b* are disposed along both ink feed slots **204** and **206**, and the firing cells **70** in fire group **202***e* are disposed along both ink feed slots **204** and **206**. Each fire line **208***b* and **208***e* is disposed along both ink feed slots **204** and **206** and joined between ink feed slots **204** and **206**. Each fire line **208***b* and **208***e* includes a post section disposed between ink feed slots **204** and **206**. The post section extends the fire line **208***b* and **208***e* to one side of printhead die **200** and forms substantially fork-shaped (or goal-post shaped) fire lines **208***b* and **208***e*. The substantially J-shaped and substantially fork-shaped fire lines **208***a*-**208***f* can be shorter in length than fire lines that extend along only one side of one ink feed slot **204** or **206**.

The substantially J-shaped fire line **208***a* is electrically coupled to firing cells **70** disposed along each of the opposing sides of ink feed slot **204**. A first section, indicated at **550**, is electrically coupled to firing cells **70** in six data line groups **212***a*, **214***a*, **216***a*, **218***a*, **220***a* and **222***a* in FG**1** at **202***a*. A second section, indicated at **552**, is electrically coupled to firing cells **70** in two data line groups **224***a* and **226***a* in FG**1** at **202***a*. The first section **550** is electrically coupled to the second section **552** through a third section **554** at one end **204***c* of ink feed slot **204**. The first section **550** is longer than the second section **552** in the y-direction along the length of ink feed slot **204**.

The first section **550** supplies the energy signal FIRE **1** to up to six firing resistors **52** coupled to conducting drive switches **72**. The second section **552** supplies the energy signal FIRE **1** to up to two firing resistors **52** coupled to conducting drive switches **72**. The first section **550** is wider at W**1** than the second section **552** at W**2**. The first section **550**, second section **552** and third section **554** are formed as part of second metal layer. In addition, the first section **550** includes a dual layer metal section, indicated with cross-hatching at **556**, formed as part of second metal layer electrically coupled to first metal layer along printhead die side **200***a*. The dual layer section **556** and the width W**1** of first section **550** maintain a suitable energy variation between firing resistors **52**.

The substantially J-shaped fire line **208***d* is electrically coupled to firing cells **70** disposed along each of the opposing sides of ink feed slot **204**. A first section, indicated at **558**, is electrically coupled to firing cells **70** in six data line groups **212***d*, **214***d*, **216***d*, **218***d*, **220***d* and **222***d* in FG**4** at **202***d*. A second section, indicated at **560**, is electrically coupled to firing cells **70** in two data line groups **224***d* and **226***d* in FG**4** at **202***d*. The first section **558** is electrically coupled to the second section **560** through a third section **562** at one end **204***d* of ink feed slot **204**. The first section **558** is longer than the second section **560** in the y-direction along the length of ink feed slot **204**.

The first section **558** supplies the energy signal FIRE**4** to up to six firing resistors **52** coupled to conducting drive switches **72**. The second section **560** supplies the energy signal FIRE**4** to up to two firing resistors **52** coupled to conducting drive switches **72**. The first section **558** is wider at W**1** than the second section **560** at W**2**. The first section **558**, second section **560** and third section **562** are formed as part of second metal layer. In addition, the first section **558** includes a dual layer metal section, indicated with cross-hatching at **564**, formed as part of second metal layer electrically coupled to first metal layer along printhead die side **200***a*. The dual layer section **564** and width W**1** of first section **558** maintain a suitable energy variation between firing resistors **52**.

The substantially J-shaped fire line **208***c* is electrically coupled to firing cells **70** disposed along each of the opposing

sides of ink feed slot **206**. A first section, indicated at **566**, is electrically coupled to firing cells **70** in six data line groups **212***c*, **214***c*, **216***c*, **218***c*, **220***c* and **222***c* in FG**3** at **202***c*. A second section, indicated at **568**, is electrically coupled to firing cells **70** in two data line groups **224***c* and **226***c* in FG**3** at **202***c*. The first section **566** is electrically coupled to the second section **568** through a third section **570** at one end **206***c* of ink feed slot **206**. The first section **566** is longer than the second section **568** in the y-direction along the length of ink feed slot **206**.

The first section **566** supplies the energy signal FIRE **3** to up to six firing resistors **52** coupled to conducting drive switches **72**. The second section **568** supplies the energy signal FIRE **3** to up to two firing resistors **52** coupled to conducting drive switches **72**. The first section **566** is wider at W**1** than the second section **568** at W**2**. The first section **566**, second section **568** and third section **570** are formed as part of second metal layer. In addition, the first section **566** includes a dual layer metal section, indicated with cross-hatching at **572**, formed as part of second metal layer electrically coupled to first metal layer along printhead die side **200***b*. The dual layer section **572** and the width W**1** of first section **566** maintain a suitable energy variation between firing resistors **52**.

The substantially J-shaped fire line **208***f* is electrically coupled to firing cells **70** disposed along each of the opposing sides of ink feed slot **206**. A first section, indicated at **574**, is electrically coupled to firing cells **70** in six data line groups **212***f*, **214***f*, **216***f*, **218***f*, **220***f* and **222***f* in FG**6** at **202***f*. A second section, indicated at **576**, is electrically coupled to firing cells **70** in two data line groups **224***f* and **226***f* in FG**6** at **202***f*. The first section **574** is electrically coupled to the second section **576** through a third section **578** at one end **206***d* of ink feed slot **206**. The first section **574** is longer than the second section **576** in the y-direction along the length of ink feed slot **206**.

The first section **574** supplies the energy signal FIRE**6** to up to six firing resistors **52** coupled to conducting drive switches **72**. The second section **576** supplies the energy signal FIRE**6** to up to two firing resistors **52** coupled to conducting drive switches **72**. The first section **574** is wider at W**1** than the second section **576** at W**2**. The first section **574**, second section **576** and third section **578** are formed as part of second metal layer. In addition, the first section **574** includes a dual layer metal section, indicated with cross-hatching at **580**, formed as part of second metal layer electrically coupled to first metal layer along printhead die side **200***b*. The dual layer section **580** and width W**1** of first section **574** maintain a suitable energy variation between firing resistors **52**.

The substantially fork-shaped fire line **208***b* is electrically coupled to firing cells **70** disposed along each ink feed slot **204** and **206**. A first section, indicated at **582**, is electrically coupled to firing cells **70** in four data line groups **212***b*, **216***b*, **220***b* and **224***b* in FG**2** at **202***b*. The second section, indicated at **584**, is electrically coupled to firing cells **70** in four data line groups **214***b*, **218***b*, **222***b* and **226***b* in FG**2** at **202***b*. The first section **582** is electrically coupled to the second section **584** through a third section or post section **586**. The first section **582** is similar in length along the y-direction and width along the x-direction to the second section **584**.

The first section **582** supplies the energy signal FIRE **2** to up to four firing resistors **52** coupled to conducting drive switches **72**. The second section **584** supplies the energy signal FIRE **2** to up to four firing resistors **52** coupled to conducting drive switches **72**. The first section **582** and the second section **584** are formed as part of second metal layer and are wider at W**3** than the section width W**2**.

The third section **586** supplies the energy signal FIRE **2** to up to eight firing resistors **52** coupled to conducting drive switches **72**. The third section **586** is formed as part of second metal layer and includes a post dual layer metal section, indicated with cross-hatching at **588**. The post dual layer metal section at **588** includes second metal layer electrically coupled to first metal layer. The post dual layer metal section **588** and the width W**3** of first and second sections **582** and **584** maintain a suitable energy variation between the firing resistors **52**.

The substantially fork-shaped fire line **208***e* is electrically coupled to firing cells **70** disposed along each ink feed slot **204** and **206**. A first section, indicated at **590**, is electrically coupled to firing cells **70** in four data line groups **212***e*, **216***e*, **220***e* and **224***e* in FG**5** at **202***e*. The second section, indicated at **592**, is electrically coupled to firing cells **70** in four data line groups **214***e*, **218***e*, **222***e* and **226***e* in FG**5** at **202***e*. The first section **590** is electrically coupled to the second section **592** through a third section or post section **594**. The first section **590** is similar in length along the y-direction and width along the x-direction to the second section **592**.

The first section **590** supplies the energy signal FIRE**5** to up to four firing resistors **52** coupled to conducting drive switches **72**. The second section **592** supplies the energy signal FIRE**5** to up to four firing resistors **52** coupled to conducting drive switches **72**. The first section **590** and the second section **592** are formed as part of second metal layer and are wider at W**3** than the section width W**2**.

The third section **594** supplies the energy signal FIRE**5** to up to eight firing resistors **52** coupled to conducting drive switches **72**. The third section **594** is formed as part of second metal layer and includes a post dual layer metal section, indicated with cross-hatching at **596**. The post dual layer metal section at **596** includes second metal layer electrically coupled to first metal layer. The post dual layer metal section **596** and the width W**3** of first and second sections **590** and **592** maintain a suitable energy variation between the firing resistors **52**.

FIG. **12** is a plan view diagram illustrating one embodiment of a section **600** of printhead die **200**. The section **600** includes three firing cells, indicated at **602***a*-**602***c*, ink feed slot **204**, reference conductor **250** and fire line **208***a*. The three firing cells **602***a*-**602***c* are similar to firing cells **70** that are disposed throughout printhead die **200** and instances of firing cells **70** that are part of data line group D**1** at **212***a* in FG**1** at **202***a*. The firing cells **602***a*-**602***c* include firing resistors **52**, memory circuits **74** and drive switches **72**, such as firing resistors **652***a*-**652***c* memory circuit **674***a* and drive switch **672***a*. The fire line **208***a* has been cut away to reveal firing cell **602***a*.

The firing cell **602***a* includes memory circuit **674***a*, drive switch **672***a* and firing resistor **652***a*. The firing resistor **652***a* includes a first resistive segment **604***a*, a second resistive segment **606***a* and a conductive shorting bar **608***a*. The first resistive segment **604***a* and second resistive segment **606***a* are separate resistive segments electrically coupled together through conductive shorting bar **608***a*. The memory circuit **674***a* is electrically coupled to the gate of drive switch **672***a* through a substrate lead **610***a*. One side of the drain-source path of drive switch **672***a* is electrically coupled to reference conductor **250**. The reference conductor **250** contacts drive switch **672***a* where the reference conductor **250** is disposed over drive switch **672***a*. The other side of the drain-source path of drive switch **672***a* is electrically coupled to a drive switch conductive lead **612***a* that electrically couples the drain-source path of drive switch **672***a* to first resistive seg-

ment **604***a*. The second resistive segment **606***a* is electrically coupled to fire line **208***a* through fire line conductive lead **614***a*.

The firing cell **602***b* includes a memory circuit and drive switch disposed under fire line **208***a* and a firing resistor **652***b* that is not disposed under fire line **208***a*. The firing resistor **652***b* includes a first resistive segment **604***b*, a second resistive segment **606***b* and a conductive shorting bar **608***b*. The first resistive segment **604***b* and second resistive segment **606***b* are separate resistive segments electrically coupled together through conductive shorting bar **608***b*. The memory circuit and drive switch of firing cell **602***b* are electrically coupled together through a substrate lead and one side of the drain-source path of the drive switch is electrically coupled to reference conductor **250**. The reference conductor **250** contacts the drive switch where the reference conductor **250** is disposed over the drive switch. The other side of the drain-source path of the drive switch is electrically coupled to a drive switch conductive lead **612***b* that electrically couples the drain-source path of the drive switch to first resistive segment **604***b*. The second resistive segment **606***b* is electrically coupled to fire line **208***a* through fire line conductive lead **614***b*.

The firing cell **602***c* includes a memory circuit and drive switch disposed under fire line **208***a* and a firing resistor **652***c* that is not disposed under fire line **208***a*. The firing resistor **652***c* includes a first resistive segment **604***c*, a second resistive segment **606***c* and a conductive shorting bar **608***c*. The first resistive segment **604***c* and second resistive segment **606***c* are separate resistive segments electrically coupled together through conductive shorting bar **608***c*. The memory circuit and drive switch of firing cell **602***c* are electrically coupled together through a substrate lead and one side of the drain-source path of the drive switch is electrically coupled to reference conductor **250**. The reference conductor **250** contacts the drive switch where the reference conductor **250** is disposed over the drive switch. The other side of the drain-source path of the drive switch is electrically coupled to a drive switch conductive lead **612***c* that electrically couples the drain-source path of the drive switch to first resistive segment **604***c*. The second resistive segment **606***c* is electrically coupled to fire line **208***a* through fire line conductive lead **614***c*.

The firing cells **602***a*-**602***c* are formed in and on semiconductor substrate **320** of printhead die **200**. The memory circuits **74**, such as memory circuit **674***a*, drive switches **72**, such as drive switch **672***a*, and substrate leads, such as substrate lead **610***a*, are formed in substrate **320** of printhead die **200**. The reference conductor **250**, drive switch conductive leads **612***a*-**612***c*, fire line conductive leads **614***a*-**614***c* and shorting bars **608***a*-**608***c* are formed as part of the first metal layer that is formed on substrate **320**. In addition, first resistive segments **604***a*-**604***c* and second resistive segments **606***a*-**606***c* are formed as part of a resistive layer.

The ink feed slot **204** is formed in substrate **320** and provides ink to firing resistors **652***a*-**652***c*. The ink feed slot **204** includes an ink feed slot edge **622** at the surface of substrate **320**. The ink feed slot edge **622** is in communication with the surface of substrate **320** along the length of ink feed slot **204**. The reference conductor **250** is disposed along ink feed slot **204** and spaced apart from ink feed slot edge **622** and is formed as part of first metal layer at **624**. Opposing side **204***a* of the ink feed slot **204** includes ink feed slot edge **622** and opposing side **204***b* of ink feed slot **204** includes an ink feed slot edge similar to ink feed slot edge **622**. In addition, each of the opposing sides **206***a* and **206***b* of ink feed slot **206** includes an ink feed slot edge in communication with the surface of substrate **320** and similar to ink feed slot edge **622**.

The reference conductor **250** is formed as part of the first metal layer and disposed between memory circuits **74**, such as memory circuit **74***a*, and ink feed slot **204**. The drive switch conductive leads **612***a*-**612***c*, fire line conductive leads **614***a*-**614***c* and firing resistors **652***a*-**652***c* are isolated from reference conductor **250** and disposed in firing resistor areas **626***a*-**626***c*. Firing resistor area **626***a* includes drive switch conductive lead **612***a*, fire line conductive lead **614***a* and firing resistor **652***a*. Firing resistor area **626***b* includes drive switch conductive lead **612***b*, fire line conductive lead **614***b* and firing resistor **652***b*. Firing resistor area **626***c* includes drive switch conductive lead **612***c*, fire line conductive lead **614***c* and firing resistor **652***c*.

The reference conductor **250** is disposed over a portion of each of the drive switches **72** and between memory circuit **74** and firing resistor areas **626***a*-**626***c*. The reference conductor **250** is also disposed between ink feed slot edge **622** and firing resistor areas **626***a*-**626***c*. In addition, the reference conductor **250** is disposed between firing resistor areas **626***a*-**626***c*. The reference conductor **250** is substantially planar between memory circuit **74** and ink feed slot edge **322**. The reference conductor **250** has a larger or increased area due to the portion of reference conductor **250** that is disposed between ink feed slot edge **622** and firing resistor areas **626***a*-**626***c*. The larger area reference conductor **250** reduces the energy variation between firing cells and provides a more uniform ink pattern.

The fire line **208***a* includes a second metal layer that is disposed over portions of the firing resistor areas **626***a*-**626***c* and disposed from the firing resistor areas **626***a*-**626***c* to one side **200***a* of printhead die **200**. The second metal layer of fire line **208***a* is disposed over portions of drive switch conductive leads **612***a*-**612***c* and fire line conductive leads **614***a*-**614***c*, and electrically coupled to fire line conductive leads **614***a*-**614***c* through vias from the second metal layer to the first metal layer. The second metal layer of fire line **208***a* is also disposed over portions of the reference conductor **250** disposed between the firing resistor areas **626***a*-**626***c* and memory circuits **74**. In addition, the second metal layer of fire line **208***a* is disposed over enable and data lines routed in the first metal layer between the reference conductor **250** and the one side **200***a* of printhead die **200**. The fire line **208***a* includes a dual layer section at **556** that includes the first metal layer at **630** electrically coupled through a via to the second metal layer of fire line **208***a*. The dual layer section at **556** is disposed along one side **200***a* of printhead die **200**.

In operation, one of the firing cells **602***a*-**602***c* is fired or energized at a time. In one example operation, memory circuit **674***a* provides a voltage level on the gate of drive switch **672***a* to turn drive switch **672***a* on or off. Fire line **208***a* receives energy signal FIRE **1** and provides an energy pulse to second resistive segment **606***a* through fire line conductive lead **614***a*.

If drive switch **672***a* is conducting, the energy pulse provides a current through firing resistor **652***a*, drive switch conductive lead **612***a* and drive switch **672***a* to reference conductor **250**. With reference conductor **250** electrically coupled to a reference voltage, for example ground, the current flows through reference conductor **250** to ground.

The layout of firing cells **602***a*-**602***c* in section **600** is similar to the layout of firing cells **70** along ink feed slots **204** and **206** throughout printhead die **200**. In addition, the layout of fire line **208***a* and reference conductor **250** in section **600** is similar to the layout of fire lines **208** and reference conductor **250** throughout printhead die **200**.

FIG. **13** is a diagram illustrating a partial cross-section of one embodiment of printhead die **200** taken at the position of line **13** in FIG. **12**. FIG. **13** is not drawn to scale for clarity. The partial cross-section includes orifice layer **400**, second metal layer **404**, isolation layer **406**, first metal layer **402** and substrate **320**. Drive switch **672***a* and ink feed slot **204** are formed in substrate **320** that includes a substrate surface **320***a*. The ink feed slot **204** includes ink feed slot edge **622** in communication with substrate surface **320***a*. The first metal layer **402** is formed on substrate surface **320***a*. Isolation layer **406** is formed on first metal layer **402** and substrate surface **320***a* and defines ink feed channel **710**.

The orifice layer **400** has a front face **400***a* and a nozzle opening **712** in the front face **400***a*. Orifice layer **400** also has a nozzle chamber or vaporization chamber **714** and a fluid path or ink feed path **716** formed therein. The firing resistor, indicated at **652***a*, is located at least partially under vaporization chamber **714**, which is between firing resistor **652***a* and nozzle opening **712**. The ink feed path **716** is located between vaporization chamber **714** and ink feed channel **710**. The vaporization chamber **714** communicates with nozzle opening **712** and ink feed path **716**. The ink feed path **716** communicates with vaporization chamber **714** and ink feed channel **710** that communicates with ink feed slot **204**. The ink feed slot **204** supplies ink to vaporization chamber **714** through ink feed channel **710** and ink feed path **716**.

The first metal layer **402** is formed on substrate **320** and insulated from second metal layer **404** by isolation layer **406**. The first metal layer includes a conductive layer **418** and a resistive layer **420**. The conductive layer **418** is made of a suitable conductive material, for example aluminum-copper, and the resistive layer **420** is made of a suitable resistive material, for example tantalum-aluminum. The first metal layer **402** includes in one embodiment multiple leads and components, including reference conductor **250**, drive switch conductive lead **612***a*, fire line conductive lead **614***a*, firing resistor **652***a* and a portion of fire line **208***a*.

The firing resistor **652***a* is made from first metal layer **402** and includes second resistive segment **606***a* and shorting bar **608***a*. The second resistive segment **606***a* includes resistive layer **420**. Conductive layer **418** is not disposed on second resistive segment **606***a*. The shorting bar **608***a* includes conductive layer **418** and resistive layer **420**. The second resistive segment **606***a* is electrically coupled to shorting bar **608***a* and fire line conductive lead **614***a*.

The fire line conductive lead **614***a* is made from first metal layer **402** and includes conductive layer **418** and resistive layer **420**. The fire line conductive lead **614***a* is electrically coupled to second metal layer **404** through via **722** formed in isolation layer **406**. The via **722** in isolation layer **406** is filled with conductive material to electrically couple fire line conductive lead **614***a* to second metal layer **404**.

The reference conductor **250** is disposed on substrate **320** over a portion of drive switch **672***a* and between firing resistor **652***a* and ink feed slot edge **622**. The reference conductor **250** is electrically coupled to one side of the drain-source path of drive switch **672***a*. The other side of the drain-source path of drive switch **672***a* is electrically coupled to drive switch conductive lead **612***a* that is electrically coupled to first resistive segment **604***a* of firing resistor **652***a*. The reference conductor **250** and drive switch conductive lead **612***a* are formed as part of first metal layer **402** and include conductive layer **418** and resistive layer **420**.

The isolation layer **406** is an insulating passivation layer disposed over first metal layer **402**, including reference conductor **250** and firing resistor **652***a*. The isolation layer **406** defines ink feed channel **710** and is disposed along ink feed slot edge **622**. The isolation layer **406** covers reference conductor **250** between firing resistor **652***a* and ink feed slot edge **622** and prevents ink from touching and corroding reference conductor **250**. The isolation layer **406** is also disposed over shorting bar **608***a* and second resistive segment **606***a* and prevents ink from touching and corroding shorting bar **608***a* and second resistive segment **606***a*. In addition, isolation layer **406** is disposed over fire line conductive lead **614***a*, drive switch conductive lead **612***a* and reference conductor **250** situated over drive switch **672***a*. The via **722** is etched in isolation layer **406** to electrically couple fire line conductive lead **614***a* to second metal layer **404**. A via **723** is etched in isolation layer **406** and filled with a conductive material to electrically couple second metal layer **404** to first metal layer **402** to form dual layer section **556**. The isolation layer **406** is formed as part of a suitable insulating material. In one embodiment, isolation layer **406** includes two layers, for example, a silicon-carbide layer and a silicon-nitride layer.

A portion of fire line **208***a* is formed in second metal layer **404** and is electrically coupled through via **722** to fire line conductive lead **614***a*. The second metal layer **404** includes a first layer **424**, made from a suitable material, for example tantalum, and a second layer **426** made from a suitable conductive material, for example gold. The first layer **424** is disposed to make contact with fire line conductive lead **614***a* through via **722**. The first layer **424** is also disposed to make contact with first metal layer **402** through via **723** to form the dual layer section **556** of fire line **208***a*. In addition, the first layer **424** is disposed at **728** on isolation layer **406** over second resistive segment **606***a*. The first layer **424** at **728** protects isolation layer **406** as ink is heated by firing resistor **652***a*. The second layer **426** is a conductive gold layer disposed on first layer **424** to form a portion of fire line **208***a*. The fire line **208***a* receives energy signal FIRE **1** and supplies energy pulses to fire line conductive lead **614***a* and second resistive segment **606***a*, through firing resistor **652***a* to heat and eject ink from vaporization chamber **714** through nozzle **712**.

Although specific embodiments have been illustrated and described herein, it will be appreciated by those of ordinary skill in the art that a variety of alternate and/or equivalent implementations may be substituted for the specific embodiments shown and described without departing from the scope of the present invention. This application is intended to cover any adaptations or variations of the specific embodiments discussed herein. Therefore, it is intended that this invention be limited only by the claims and the equivalents thereof.

What is claimed is:

1. A fluid ejection device comprising:

a substrate;

a first fluid feed slat formed in the substrate and having a first fluid feed slot edge;

first firing resistors disposed along the first fluid feed slot and first nozzle openings each associated with one of the first firing resistors, wherein the first firing resistors are configured to respond to a first current to heat fluid provided by the first fluid feed slot via a fluid path and eject the fluid from the associated one of the first nozzle openings;

first conductive leads extending to respective ones of the first firing resistors, and second conductive leads extending from respective ones of the first firing resistors; and

a reference conductor formed on the substrate and configured to conduct the first current from the first firing resistors, wherein the reference conductor is disposed between adjacent ones of the first firing resistors as associated with respective ones of the first nozzle open-

ings, between the first conductive leads and the second conductive loads of one of the first firing resistors and the first conductive leads and the second conductive leads of an adjacent one of the first firing resistors, and under the fluid path in an area between the first fluid feed slot edge and the first firing resistors.

2. The fluid ejection device of claim **1**, comprising drive switches, wherein each of the drive switches is electrically coupled to a corresponding first firing resistor of the first firing resistors and the reference conductor is disposed over a portion of the drive switches.

3. The fluid ejection device of claim **1**, comprising drive switches formed in a first layer and firing resistor areas formed in a second layer disposed along the first fluid feed slot, wherein the reference conductor is disposed between adjacent firing resistor areas and over a portion of the drive switches.

4. The fluid ejection device of claim **1**, comprising drive switches, wherein each of the drive switches is electrically connected to a corresponding first firing resistor of the first firing resistors and the reference conductor.

5. The fluid ejection device of claim **1**, comprising drive switches, wherein each of the drive switches is a field effect transistor that is electrically connected between a corresponding first firing resistor and the reference conductor.

6. The fluid ejection device of claim **1**, wherein the reference conductor is disposed along the entire length of the first fluid feed slot.

7. The fluid ejection device of claim **1**, wherein the reference conductor is disposed along opposing sides of the first fluid feed slot and along the entire length of the opposing sides of the first fluid feed slot.

8. The fluid ejection device of claim **1**, wherein the first firing resistors are disposed along opposing sides of the first fluid feed slot and the reference conductor is disposed between the first firing resistors and the first fluid feed slot edge along one of the opposing sides of the first fluid feed slot and the first firing resistors and a second fluid feed slot edge along another one of the opposing sides of the first fluid feed slot.

9. The fluid ejection device of claim **1**, comprising second firing resistors disposed along the first fluid feed slot and configured to respond to a second current to heat fluid provided by the first fluid feed slot, wherein the reference conductor is configured to conduct the second current from the second firing resistors and the reference conductor is disposed between the first fluid feed slot edge and the second firing resistors.

10. The fluid ejection device of claim **9**, wherein the second firing resistors are disposed on opposing sides of the first fluid feed slot and the reference conductor is disposed between the second firing resistors and the first fluid feed slot edge along one of the opposing sides of the first fluid feed slot and the second firing resistors and a second fluid feed slot edge along another one of the opposing sides of the first fluid feed slot.

11. The fluid ejection device of claim **9**, comprising a second fluid feed slot and third firing resistors disposed along the second fluid feed slot and configured to respond to a third current to heat fluid provided by the second fluid feed slot, wherein the reference conductor is configured to conduct the third current from the third firing resistors, and the reference conductor is disposed between the third firing resistors and a second fluid feed slot edge along the second fluid feed slot.

12. The fluid ejection device of claim **11**, wherein the third firing resistors are disposed on opposing sides of the second fluid feed slot and the reference conductor is disposed between the third firing resistors and the second fluid feed slot edge along one of the opposing sides of the second fluid feed slot and the third firing resistors and a third fluid feed slot edge along another one of the opposing sides of the second fluid feed slot.

13. The fluid ejection device of claim **11**, comprising fourth firing resistors disposed along the second fluid feed slot and configured to respond to a fourth current to heat fluid provided by the second fluid feed slot, wherein the reference conductor is configured to conduct the fourth current from the fourth firing resistors and the reference conductor is disposed between the second fluid feed slot edge and the fourth firing resistors.

14. The fluid ejection device of claim **13**, wherein the fourth firing resistors are disposed on opposing sides of the second fluid feed slot and the reference conductor is disposed between the fourth firing resistors and the second fluid feed slot edge along one of the opposing sides of the second fluid feed slot and the fourth firing resistors and a third fluid feed slot edge along another one of the opposing sides of the second fluid feed slot.

15. The fluid ejection device of claim **13**, comprising fifth firing resistors, wherein a first portion of the fifth firing resistors are disposed along the first fluid feed slot and configured to respond to a fifth current to heat fluid provided by the first fluid feed slot and a second portion of the fifth firing resistors are disposed along the second fluid feed slot and configured to respond to the fifth current to heat fluid provided by the second fluid feed slot, wherein the reference conductor is configured to conduct the fifth current from the fifth firing resistors and is disposed between the first fluid feed slot edge and the first portion of the fifth firing resistors and between the second fluid feed slot edge and the second portion of the fifth firing resistors.

16. The fluid ejection device of claim **15**, comprising sixth firing resistors, wherein a first portion of the sixth firing resistors are disposed along the first fluid feed slot and configured to respond to a sixth current to heat fluid provided by the first fluid feed slot and a second portion of the sixth firing resistors are disposed along the second fluid feed slot and configured to respond to the sixth current to heat fluid provided by the second fluid feed slot, wherein the reference conductor is configured to conduct the sixth current from the sixth firing resistors and is disposed between the first fluid feed slot edge and the first portion of the sixth firing resistors and between the second fluid feed slot edge and the second portion of the sixth firing resistors.

17. The fluid ejection device of claim **1**, comprising a second fluid feed slot having a second fluid feed slot edge and second firing resistors, wherein a first portion of the second firing resistors are disposed along the first fluid feed slot and configured to respond to a second current to heat fluid provided by the first fluid feed slot and a second portion of the second firing resistors are disposed along the second fluid feed slot and configured to respond to the second current to heat fluid provided by the second fluid feed slot, wherein the reference conductor is configured to conduct the second current from the second firing resistors and is disposed between the first fluid feed slot edge and the first portion of the second firing resistors and between the second fluid feed slot edge and the second portion of the second firing resistors.

18. The fluid ejection device of claim **1**, wherein the reference conductor comprises a conductive layer and a resistive layer.

19. The fluid ejection device of claim **1**, comprising:

vaporization chambers fluidically coupled to the first fluid feed slot; and

an isolation layer configured to isolate the reference conductor from fluid flowing from the fluid feed slot to the vaporization chambers, wherein the reference conductor is disposed between adjacent vaporization chambers and between the vaporization chambers and the first fluid feed slot edge.

20. The fluid ejection device of claim **1**, wherein each of the first firing resistors includes a first resistive segment, a second resistive segment, and a conductive shorting bar electrically coupled to the first resistive segment and the second resistive segment.

21. The fluid ejection device of claim **20**, wherein a respective one of the first conductive leads is electrically coupled to the first resistive segment of a respective one of the first firing resistors, and wherein a respective one of the second conductive leads is electrically coupled to the second resistive segment of the respective one of the first firing resistors.

22. A method of operating a fluid ejection device, comprising:

receiving fluid via a fluid path at first firing resistors disposed along a first fluid feed slot formed in a substrate, the first fluid feed slot having a first fluid feed slot edge and the fluid path extending between the first fluid feed slot edge and the first firing resistors; receiving a first current at the first firing resistors via first conductive leads extending to respective ones of the first firing resistors;

heating the fluid received from the first fluid feed slot in response to receiving the first current at the first firing resistors and ejecting the fluid from respective first nozzle openings each associated with one of the first firing resistors;

receiving the first current from the first firing resistors at a reference conductor via second conductive leads extending from respective ones of the first firing resistors, the reference conductor formed on the substrate between adjacent ones of the first firing resistors as associated with respective ones of the first nozzle openings, between the first conductive leads and the second conductive leads extending to and from one of the first firing resistors and the first conductive leads and the second conductive leads extending to and from an adjacent one of the first firing resistors, and under the fluid path in an area between the first fluid feed slot edge and the first firing resistors; and

conducting part of the first current through the reference conductor as disposed between the adjacent ones of the first firing resistors, between the first conductive leads and the second conductive leads extending to and from one of the first firing resistors and the first conductive leads and the second conductive leads extending to and from an adjacent one of the first firing resistors, and between the first fluid feed slot edge and the first firing resistors.

23. The method of claim **22**, comprising:

gating the first current through drive switches; and

conducting a second part of the first current through the reference conductor as disposed over a portion of the drive switches.

24. The method of claim **23**, comprising conducting the second part of the first current through the reference conductor along the entire length of the first fluid feed slot.

25. The method of claim **23**, comprising receiving the first current from the first firing resistors on opposing sides of the first fluid feed slot.

26. The method of claim **23**, comprising:

receiving a second current at second firing resistors disposed along the first fluid feed slot;

heating the fluid received from the first fluid feed slot in response to receiving the second current at the second firing resistors;

receiving the second current from the second firing resistors at the reference conductor; and

conducting part of the second current through the reference conductor as disposed between the first fluid feed slot edge and the second firing resistors.

27. The method of claim **26**, comprising:

receiving fluid via a second fluid path at second firing resistors disposed along a second fluid feed slot formed in the substrate, the second fluid feed slot having a second fluid feed slot edge and the second fluid path extending between the second fluid feed slot edge and the second firing resistors;

receiving the first current at the second firing resistors;

heating the fluid received from the second fluid feed slot in response to receiving the first current at the second firing resistors;

receiving the first current from the second firing resistors at the reference conductor as formed on the substrate under the second fluid path in an area between the second fluid feed slot edge and the second firing resistors; and

conducting a second part of the first current through the reference conductor as disposed between the second fluid feed slot edge and the second firing resistors.

28. The method of claim **23**, comprising:

receiving fluid via a second fluid path at second firing resistors disposed along a second fluid feed slot formed in the substrate, the second fluid feed slot having a second fluid feed slot edge and the second fluid path extending between the second fluid feed slot edge and the second firing resistors;

receiving a second current at the second firing resistors;

heating the fluid received from the second fluid feed slot in response to receiving the second current at the second firing resistors;

receiving the second current from the second firing resistors at the reference conductor as formed on the substrate under the second fluid path in an area between the second fluid feed slot edge and the second firing resistors; and

conducting part of the second current through the reference conductor as disposed between the second fluid feed slot edge and the second firing resistors.

29. The method of claim **22**, wherein each of the first firing resistors includes a first resistive segment, a second resistive segment, and a conductive shorting bar electrically coupled to the first resistive segment and the second resistive segment.

30. The method of claim **29**, wherein a respective one of the first conductive leads is electrically coupled to the first resistive segment of a respective one of the first firing resistors, and wherein a respective one of the second conductive leads is electrically coupled to the second resistive segment of the respective one of the first firing resistors.

31. A fluid ejection device comprising:

a substrate;

a fluid feed slot formed in the substrate;

vaporization chambers fluidically coupled to the fluid feed slot via a fluid path;

nozzle openings each communicated with a respective one of the vaporization chambers;

firing resistors disposed in the vaporization chambers;

first conductive leads extending to respective ones of the firing resistors and second conductive leads extending from respective ones of the firing resistors; and

a reference conductor disposed between adjacent ones of the firing resistors as communicated with respective ones of the nozzle openings, between the first conductive leads and the second conductive leads extending to and from one of the firing resistors and the first conductive leads and the second conductive leads extending to and from an adjacent one of the firing resistors, and under the fluid path in an area between an edge of the fluid feed slot and the vaporization chambers.

32. The fluid ejection device of claim **31** comprising:

an isolation structure configured to isolate the reference conductor from fluid flowing through the fluid path.

33. The fluid ejection device of claim **31**, wherein each of the firing resistors includes a first resistive segment, a second resistive segment, and a conductive shorting bar electrically coupled to the first resistive segment and the second resistive segment.

34. The fluid ejection device of claim **33**, wherein a respective one of the first conductive leads is electrically coupled to the first resistive segment of a respective one of the firing resistors, and wherein a respective one of the second conductive leads is electrically coupled to the second resistive segment of the respective one of the firing resistors.

* * * * *

UNITED STATES PATENT AND TRADEMARK OFFICE

CERTIFICATE OF CORRECTION

PATENT NO. : 7,488,056 B2
APPLICATION NO. : 10/827030
DATED : February 10, 2009
INVENTOR(S) : Joseph M Torgerson et al.

It is certified that error appears in the above-identified patent and that said Letters Patent is hereby corrected as shown below:

In column 28, line 51, in Claim 1, delete “slat” and insert -- slot --, therefor.

In column 29, line 2, in Claim 1, delete “loads” and insert -- leads --, therefor.

Signed and Sealed this

Twenty-sixth Day of May, 2009

John Doll

JOHN DOLL
Acting Director of the United States Patent and Trademark Office