US006082854A

United States Patent [19]

Axtell et al.

[11] **Patent Number: 6,082,854**

[45] **Date of Patent: Jul. 4, 2000**

[54] **MODULAR INK-JET HARD COPY APPARATUS AND METHODOLOGY**

[75] Inventors: **James P Axtell**; **Trudy L Benjamin**, both of Portland, Oreg.; **David J Lowe**, Vancouver, Wash.; **Preston D. Seu**, Vancouver, Wash.; **Blair M. Kent**, Vancouver, Wash.

[73] Assignee: **Hewlett-Packard Company**, Palo Alto, Calif.

[21] Appl. No.: **09/039,735**

[22] Filed: **Mar. 16, 1998**

[51] **Int. Cl.**[7] **B41J 2/01**

[52] **U.S. Cl.** **347/108**

[58] **Field of Search** 347/7, 22, 23, 347/29, 33, 85, 86, 87, 108

[56] **References Cited**

U.S. PATENT DOCUMENTS

4,277,790	7/1981	Heibein et al. .
4,329,698	5/1982	Smith .
4,436,439	3/1984	Koto .

(List continued on next page.)

FOREIGN PATENT DOCUMENTS

0401944A1	12/1990	European Pat. Off.	B41J 3/28
419-876	4/1991	European Pat. Off.	347/108
0664218A2	7/1995	European Pat. Off.	B41J 2/20
0724959A1	8/1996	European Pat. Off.	B41J 2/165
0764538	3/1997	European Pat. Off.	B41J 2/175
0813974	12/1997	European Pat. Off.	B41J 29/02
0863013	9/1998	European Pat. Off.	B41J 2/17
54-13338	1/1979	Japan	347/108
59-167264	9/1984	Japan	347/108
60-85964	5/1985	Japan	347/108
2221426A	2/1990	United Kingdom	B41J 5/48

OTHER PUBLICATIONS

Mills, Ink Jet Printing—Past, Present and Future, Recent Progress in Ink–Jet Tech., Oct. 30–Nov. 4, 1994, pp. 12–15, New Orleans.

N/A, Products, COMDEX, Ink Jet, The Hardcopy Observer, Nov. 1991, California, pp. 4–5.

N/A, Products, Epson Launches Low Cost Ink Jets, Apr. 1992, The Hardcopy Observer, California, p. 5.

N/A, New Stylus 800 Puts Epson in the Ink Jet Race with Canon, HP, Mar. 1993 The Hardcopy Observer, California, pp. 1, 18–20 vol. III, No. 3.

N/A, Canon Computer Challenges HP With New Desktop Color Ink Jet, The Hardcopy Observer, vol. III, No. 10, Calif., pp. 1+36–39, Oct. 1993.

N/A,HP Rolls OUt Five New DeskJets and a New Distribution Strategy, The Hardcopy Observer, vol. V, No.8, Calif., p. 1+34–38, Aug. 1995.

N/A, HP Adds Color to OfficeJets, . . . Epson Updates Ink Jet . . . , The Hardcopy Observer, vol. III, No. 3, Calif., p. 1+48–52, Mar. 1997.

Primary Examiner—N. Le
Assistant Examiner—Anh T. N. Vo

[57] **ABSTRACT**

The present invention provides ink-jet writing engine modules for use with a compatible hard copy engine module, a hard copy apparatus based thereon, and methods of manufacturing, operation, and use. Fluidic and electronic partitioning for ink-jet hard copy apparatus is redefined. Modular separation of a hard copy engine from a writing engine allows a replaceable writing module containing all of the key elements of the ink-jet writing system based on writing system technology requirements, particularly for those most likely to age or fail as a result of time, frequency of use, or end-user actions. The writing engine subsystem includes: one or more printing modules having print head elements with concomitant ink manifold components and ink flow and pressure regulation mechanisms; one or more ink containers—either permanent, refillable, or replaceable; one or more ink formulations; one or more ink delivery means, such as tubes and valves fluidically coupling the ink containers to the ink manifolds; service station components; and a framework to retain the elements in a unitary module, insertable cassette-like manner. The present invention further provides a hard copy engine compatible with such a writing engine. The hard copy engine does not contain any components requiring direct contact with ink. Ink-wetted components are predisposed to ink-jet technological changes without affecting the electrical interface and the mechanical interface between the writing engine and the hard copy engine.

19 Claims, 19 Drawing Sheets

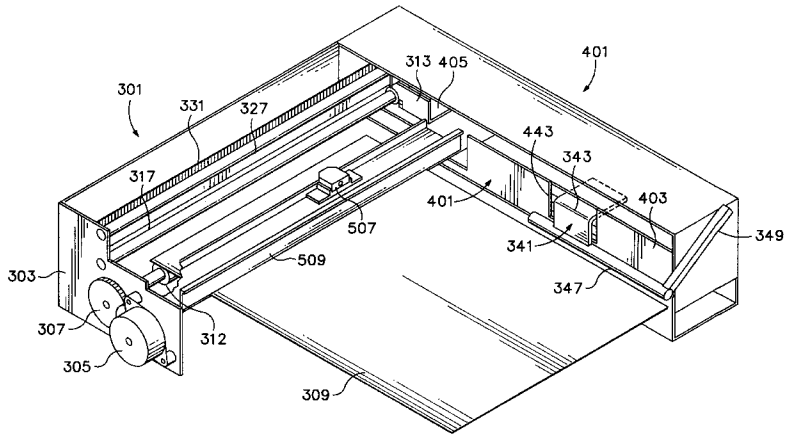

U.S. PATENT DOCUMENTS

4,567,494 1/1986 Taylor .
4,709,246 11/1987 Piatt et al. .
4,789,874 12/1988 Majette .
4,800,398 1/1989 Naruse et al. .
4,809,015 2/1989 Bowling et al. 347/74
4,831,389 5/1989 Chan .
4,847,631 7/1989 Naruse .
4,853,717 8/1989 Harmon .
4,968,998 11/1990 Allen .
4,992,802 2/1991 Dion .
5,027,134 6/1991 Harmon .
5,067,832 11/1991 Baur et al. 400/66
5,103,244 4/1992 Gast .
5,115,250 5/1992 Harmon .
5,138,344 8/1992 Ujita .
5,146,243 9/1992 English .
5,151,714 9/1992 Ward .
5,245,365 9/1993 Woodard et al. .
5,325,119 6/1994 Fong .
5,359,353 10/1994 Hunt .
5,369,429 11/1994 Erickson .
5,396,277 3/1995 Gast .
5,409,062 4/1995 Brown et al. .
5,409,134 4/1995 Cowger .
5,440,331 8/1995 Grange .
5,448,270 9/1995 Osborne .
5,448,818 9/1995 Scheffelin .
5,455,608 10/1995 Stewart .
5,455,609 10/1995 Gast .
5,463,415 10/1995 McCann et al. 347/74
5,506,611 4/1996 Ujita et al. 347/86
5,576,741 11/1996 Johnson et al. 346/145
5,614,930 3/1997 Osborne .
5,650,811 7/1997 Seccombe .
5,689,291 11/1997 Tence et al. 347/10
5,798,777 8/1998 Yoshimura et al. 347/44
5,929,883 7/1999 Gunther et al. 347/85

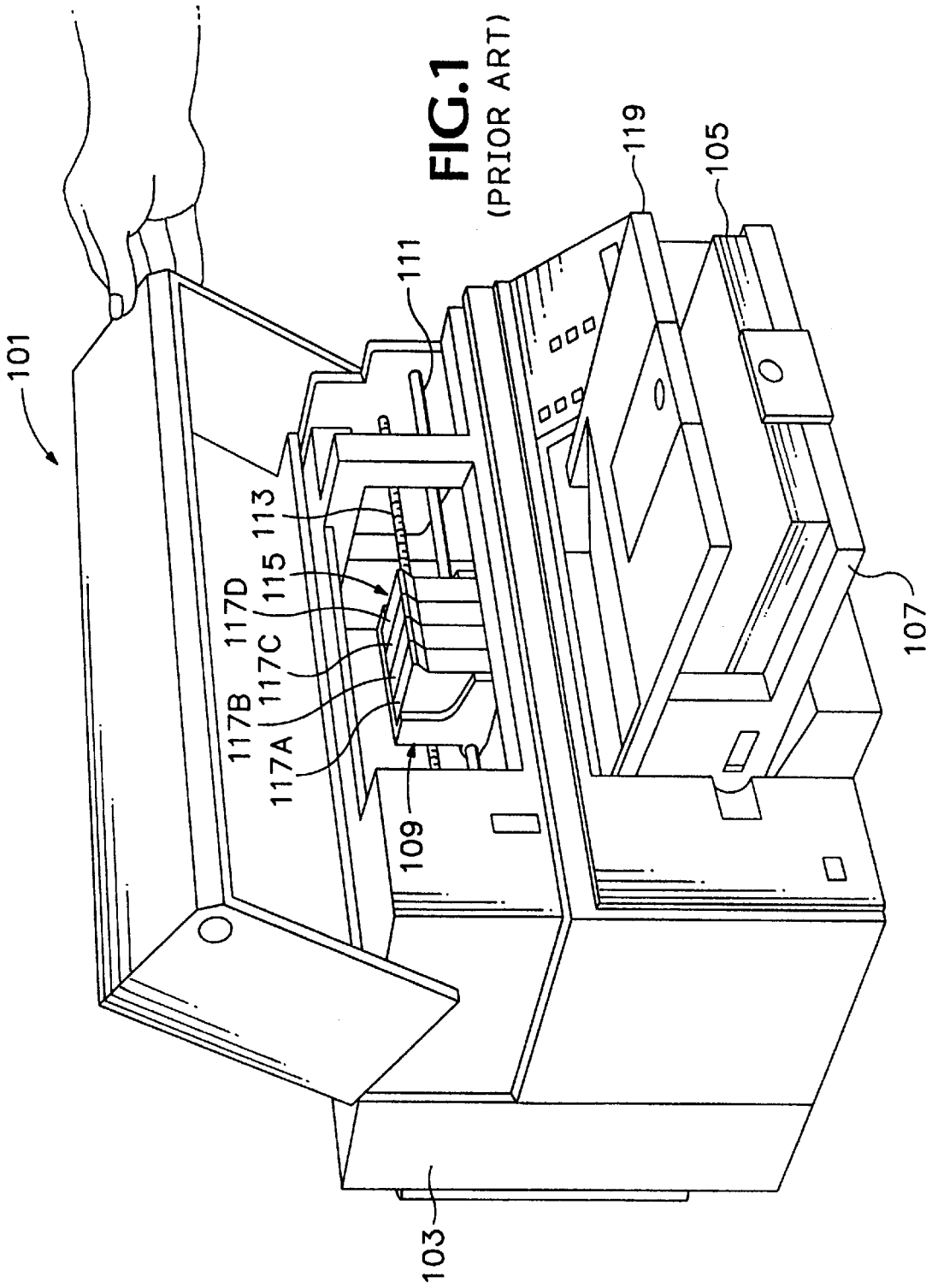

FIG.1
(PRIOR ART)

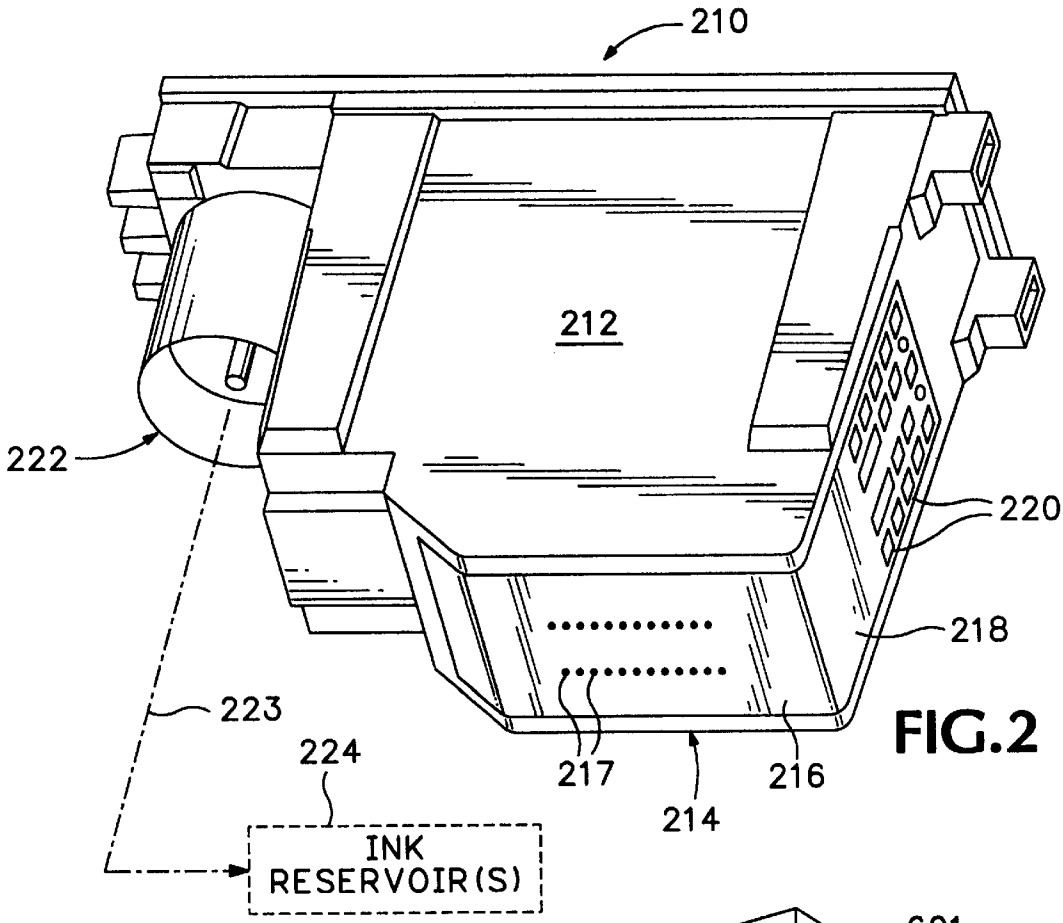
210
212
222
220
218
223
224
217
216
214
INK
RESERVOIR(S)

FIG.2

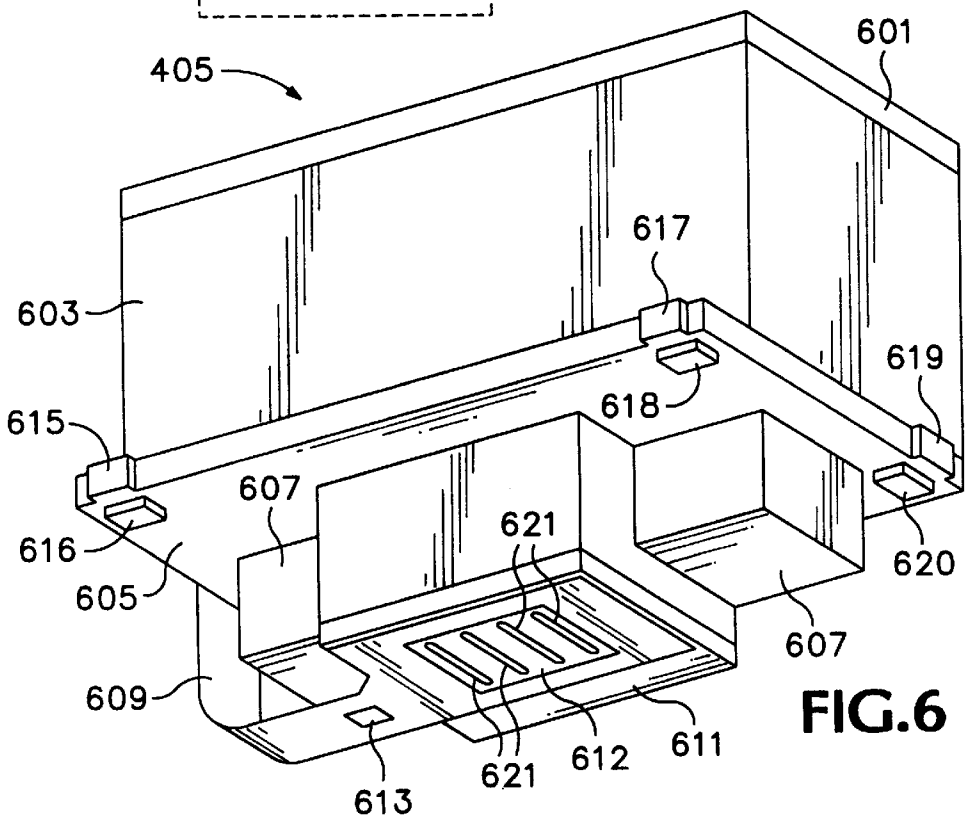
405
601
617
603
619
618
615
607
621
616
620
605
607
609
611
612
621
613

FIG.6

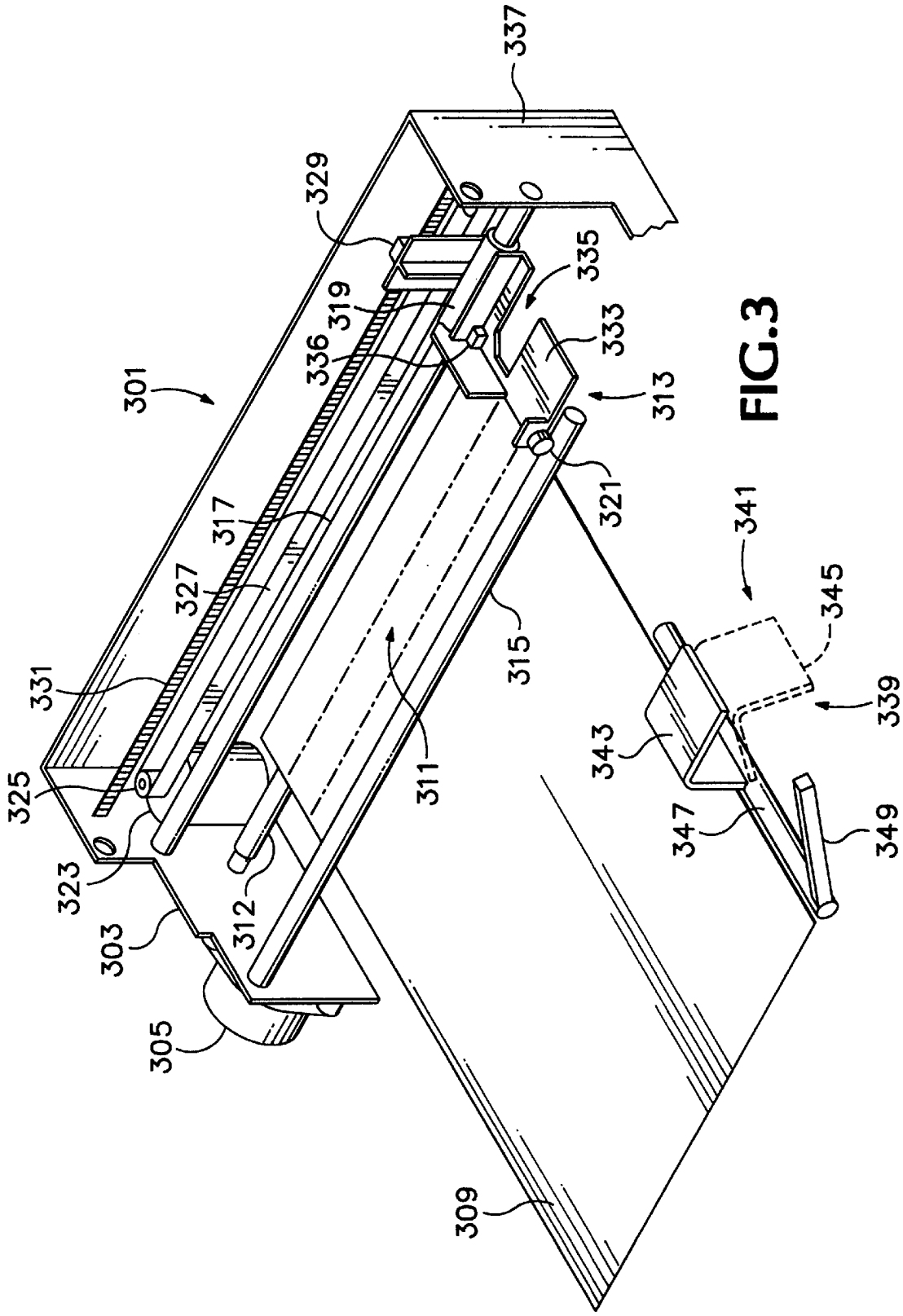
337
329
335
319
333
336
301
313
321
317
341
327
345
315
331
339
311
343
325
347
349
323
312
303
305
309

FIG.3

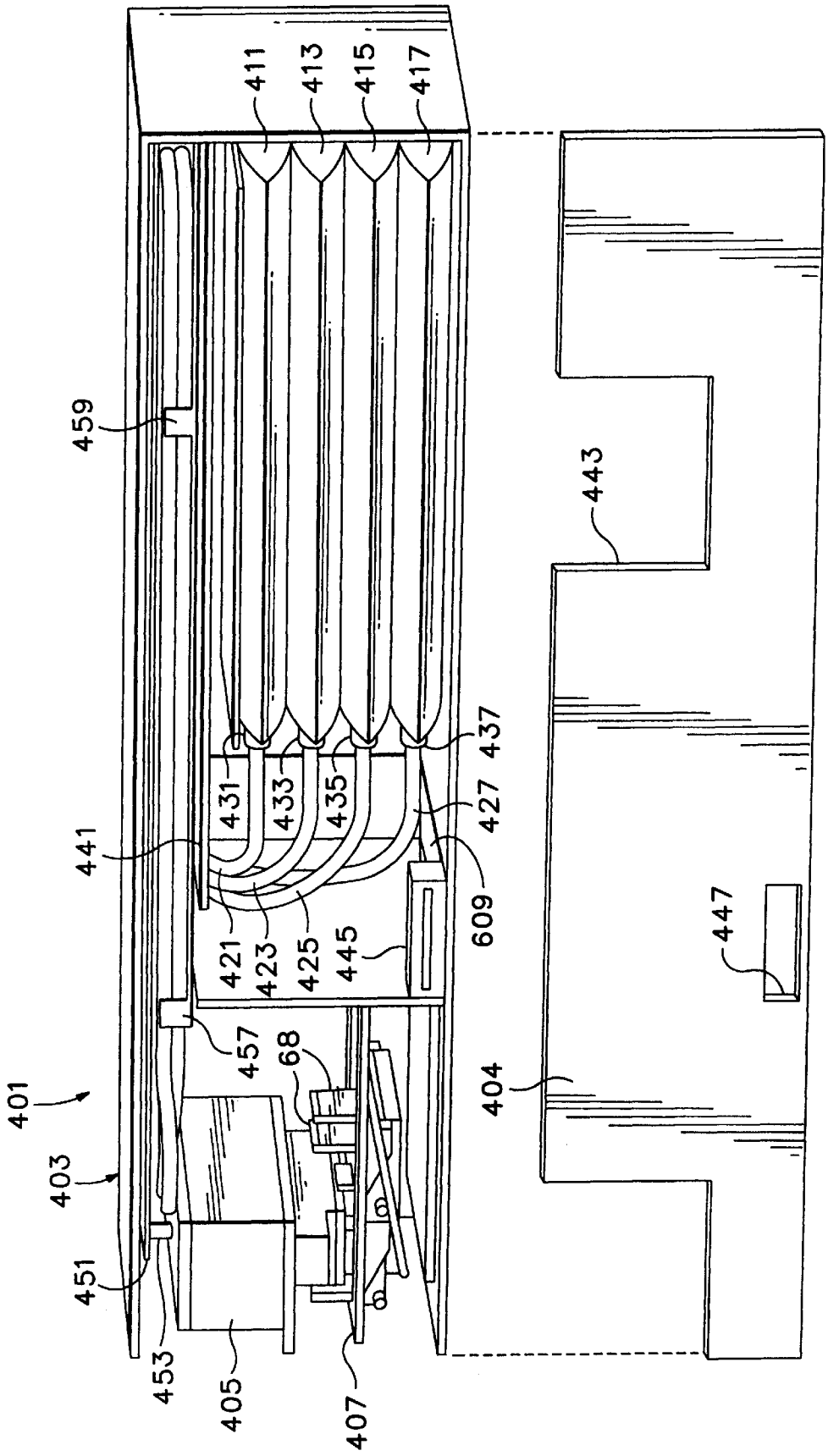
411
413
415
417
459
443
437
431
433
435
427
441
609
421
423
425
445
447
457
68
404
401
403
451
453
405
407

FIG.4

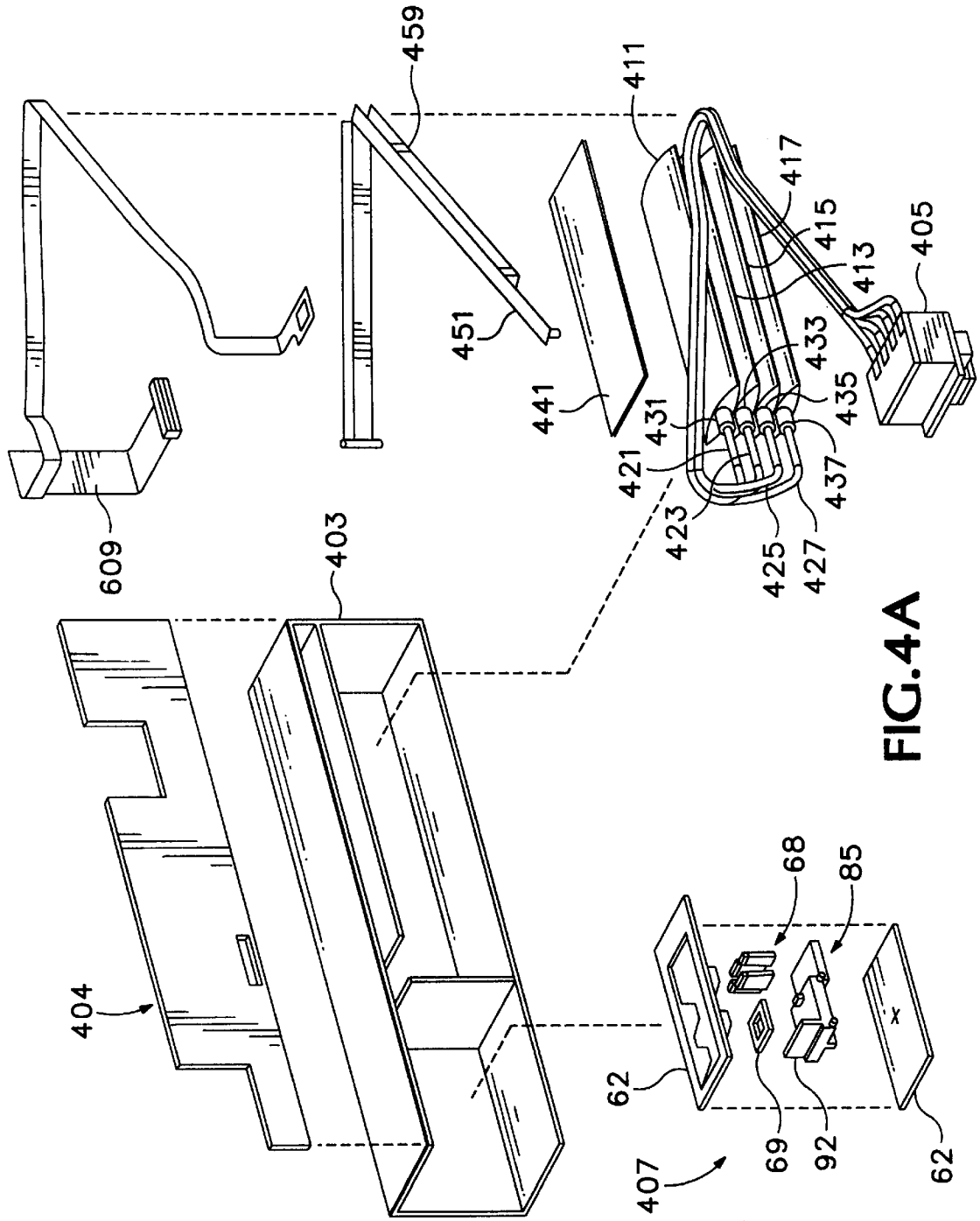
459
411
417
415
413
405
451
433
441
431
435
421
437
423
425
427
609
403
68
85
404
62
69
92
407
62

FIG.4A

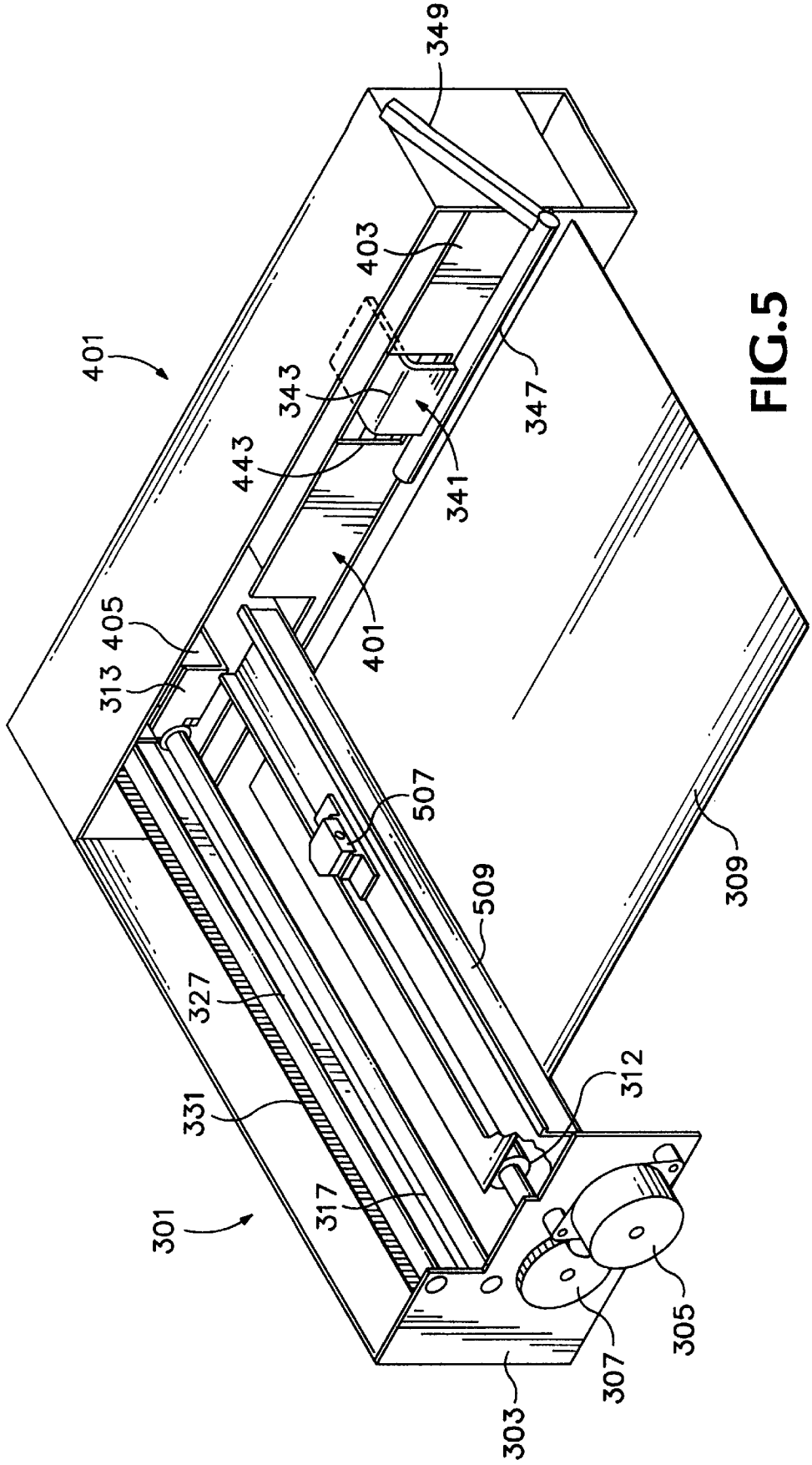
349
403
401
343
347
443
341
401
405
313
507
509
309
327
312
331
317
301
305
307
303

FIG.5

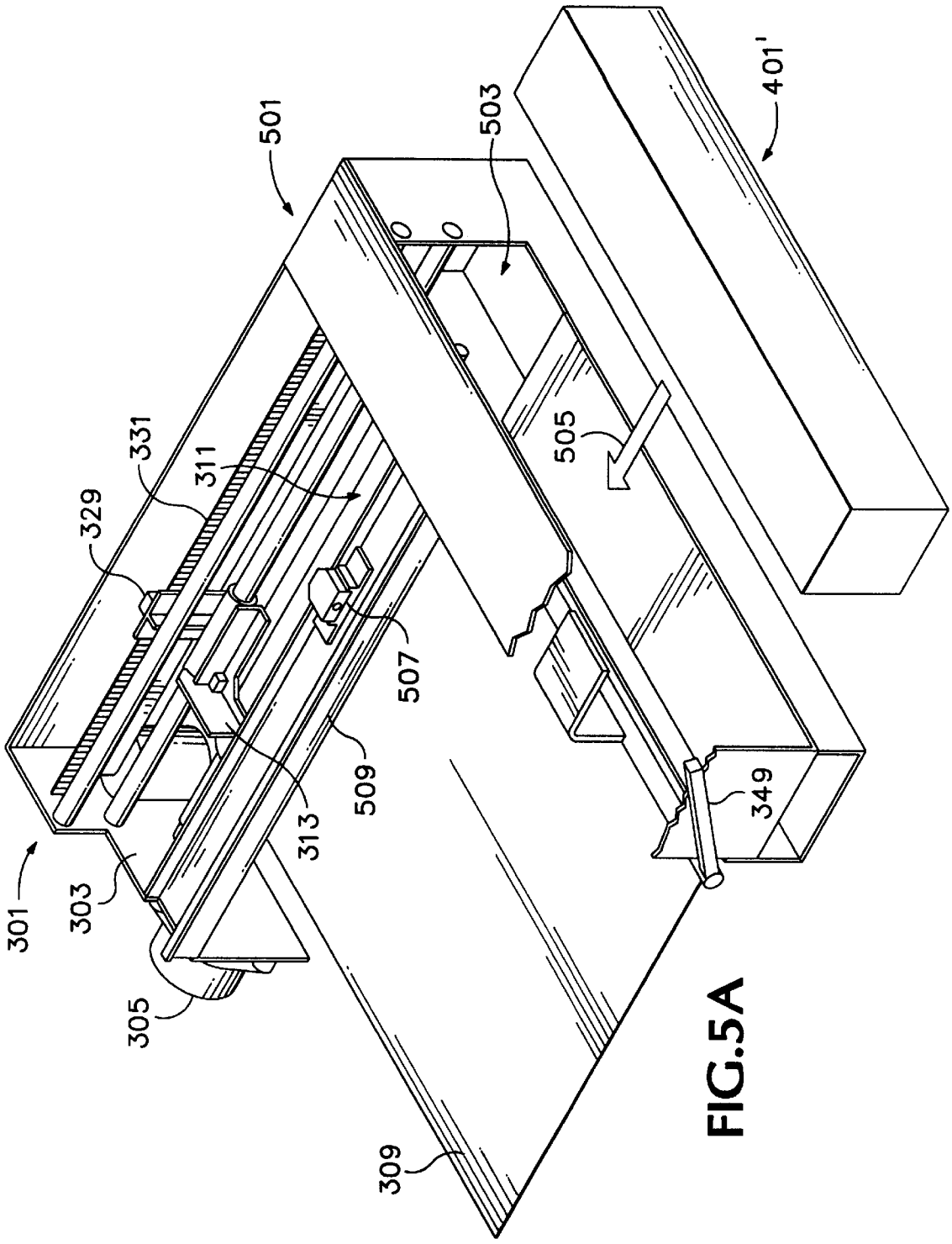

FIG.5A

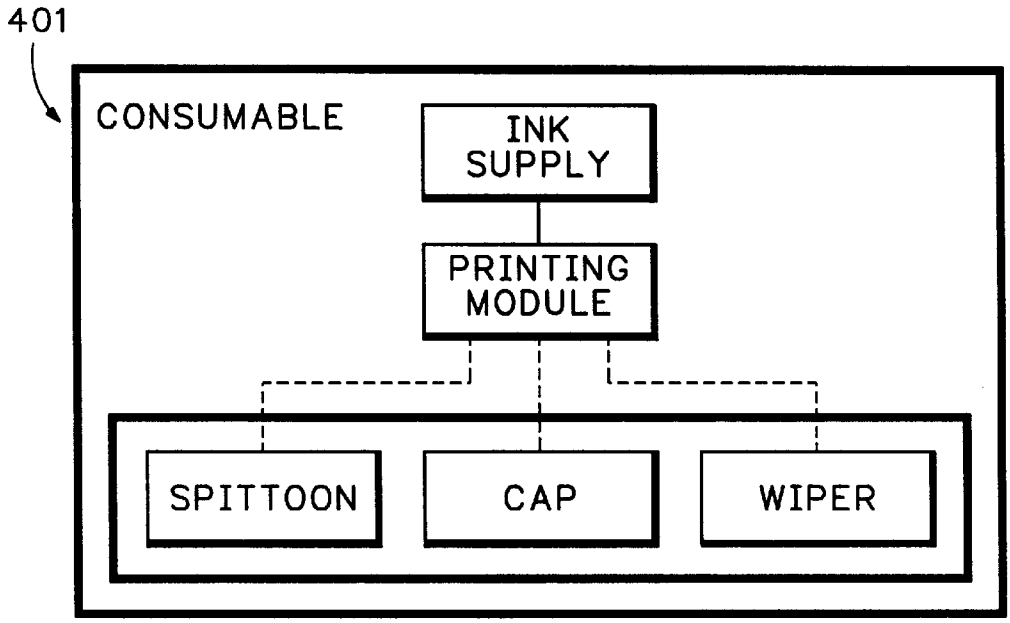

FLUIDIC BLOCK DIAGRAM

FIG.7

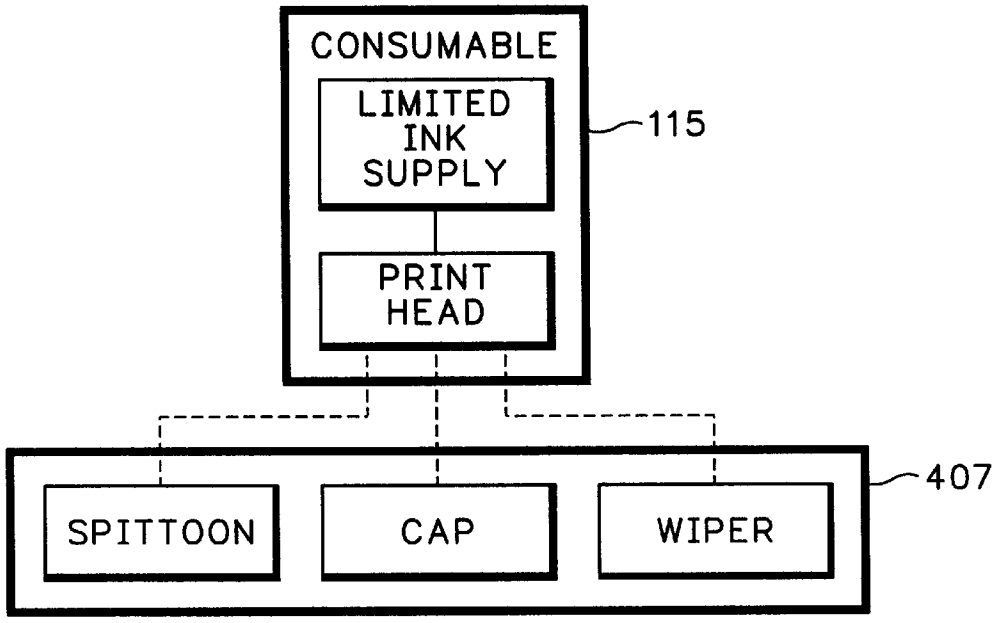

DISPOSABLE PRINT CARTRIDGE
FLUIDIC BLOCK DIAGRAM

FIG.8
(PRIOR ART)

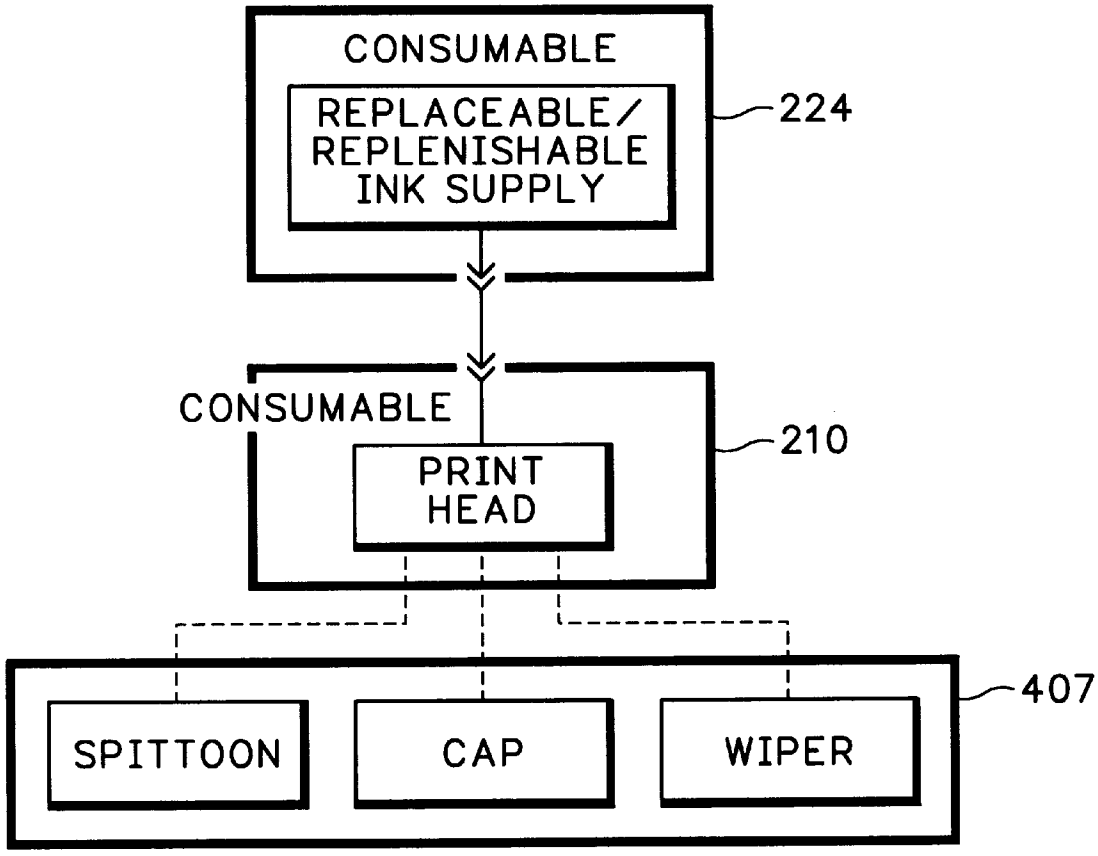

FIG.9
(PRIOR ART)

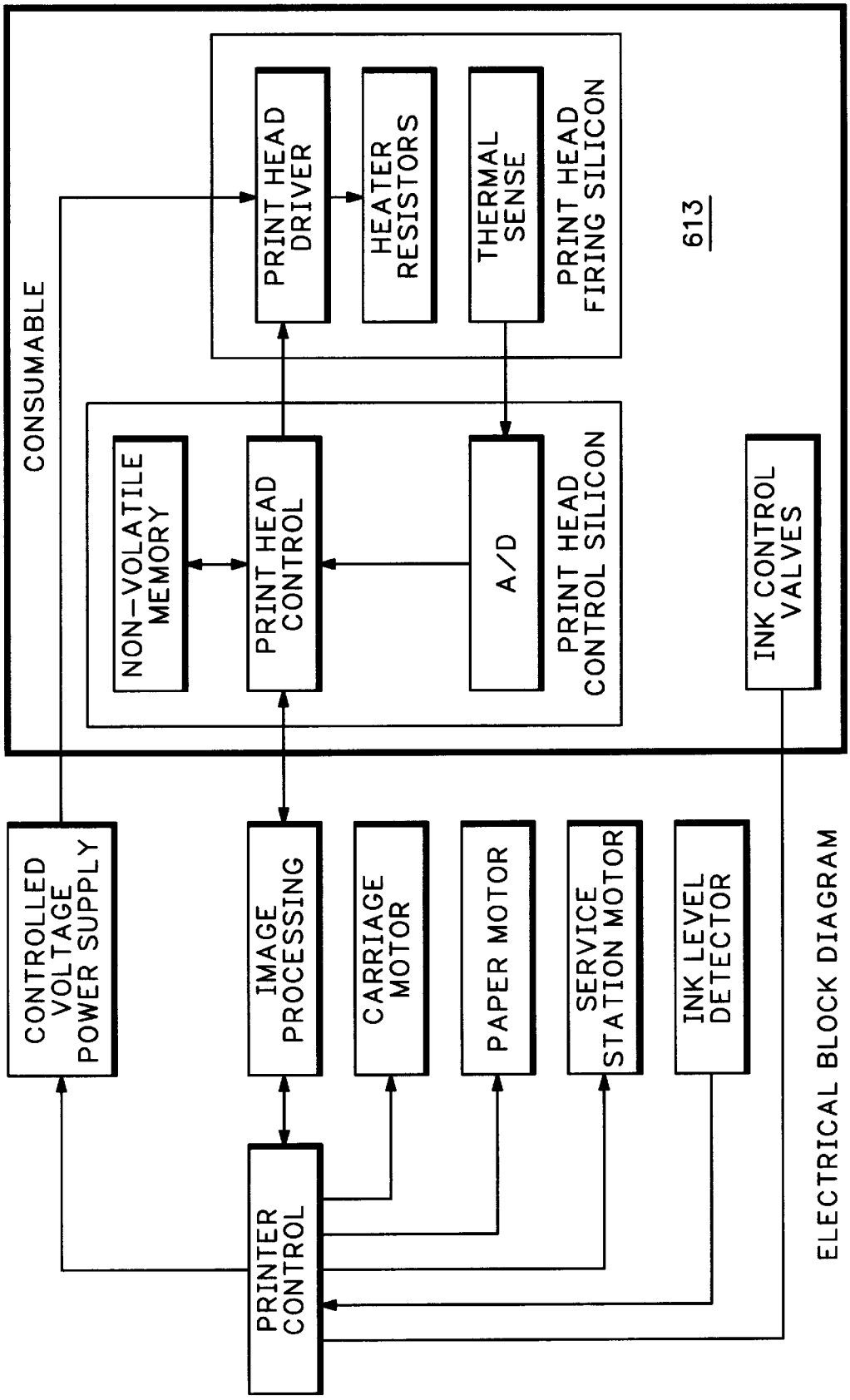

ELECTRICAL BLOCK DIAGRAM

FIG.10

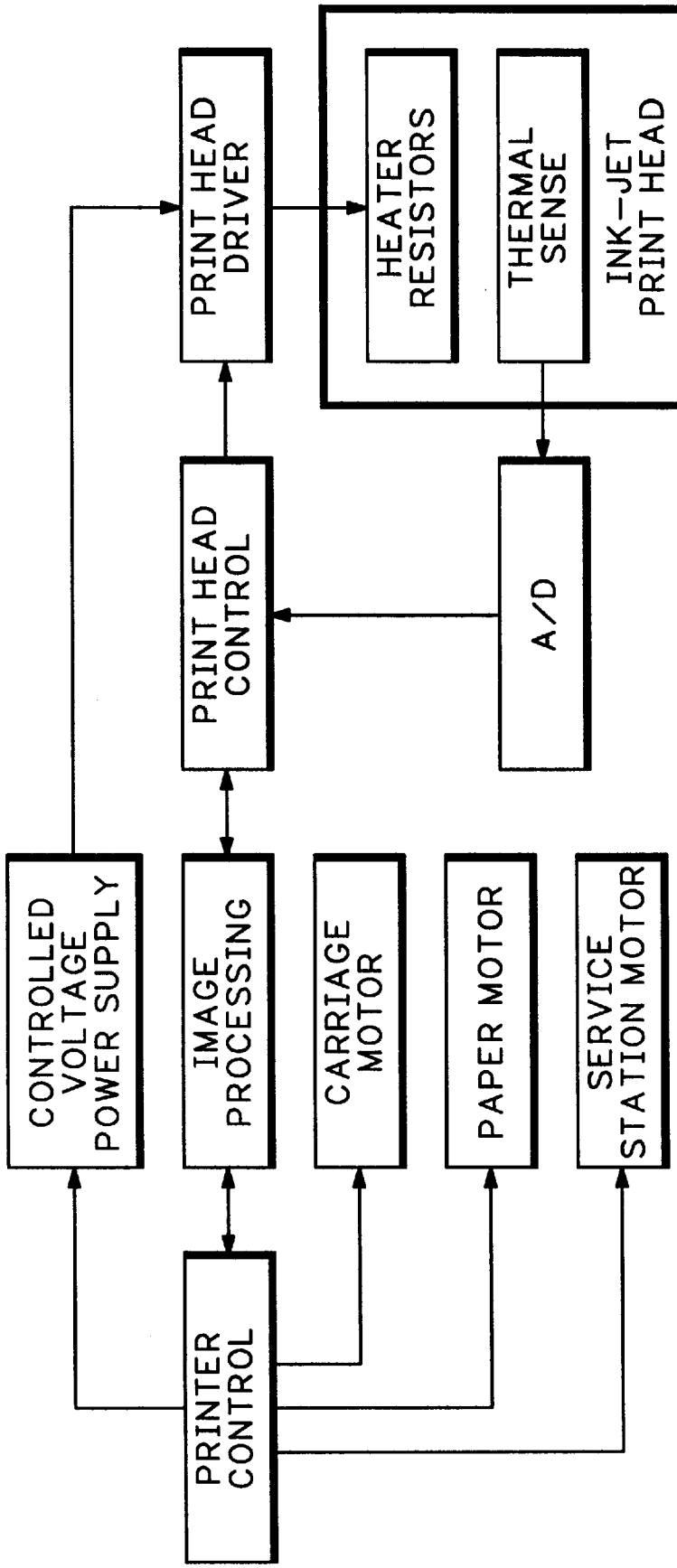

DESKJET™ 850C PRINTER ELECTRICAL BLOCK DIAGRAM

FIG.11
(PRIOR ART)

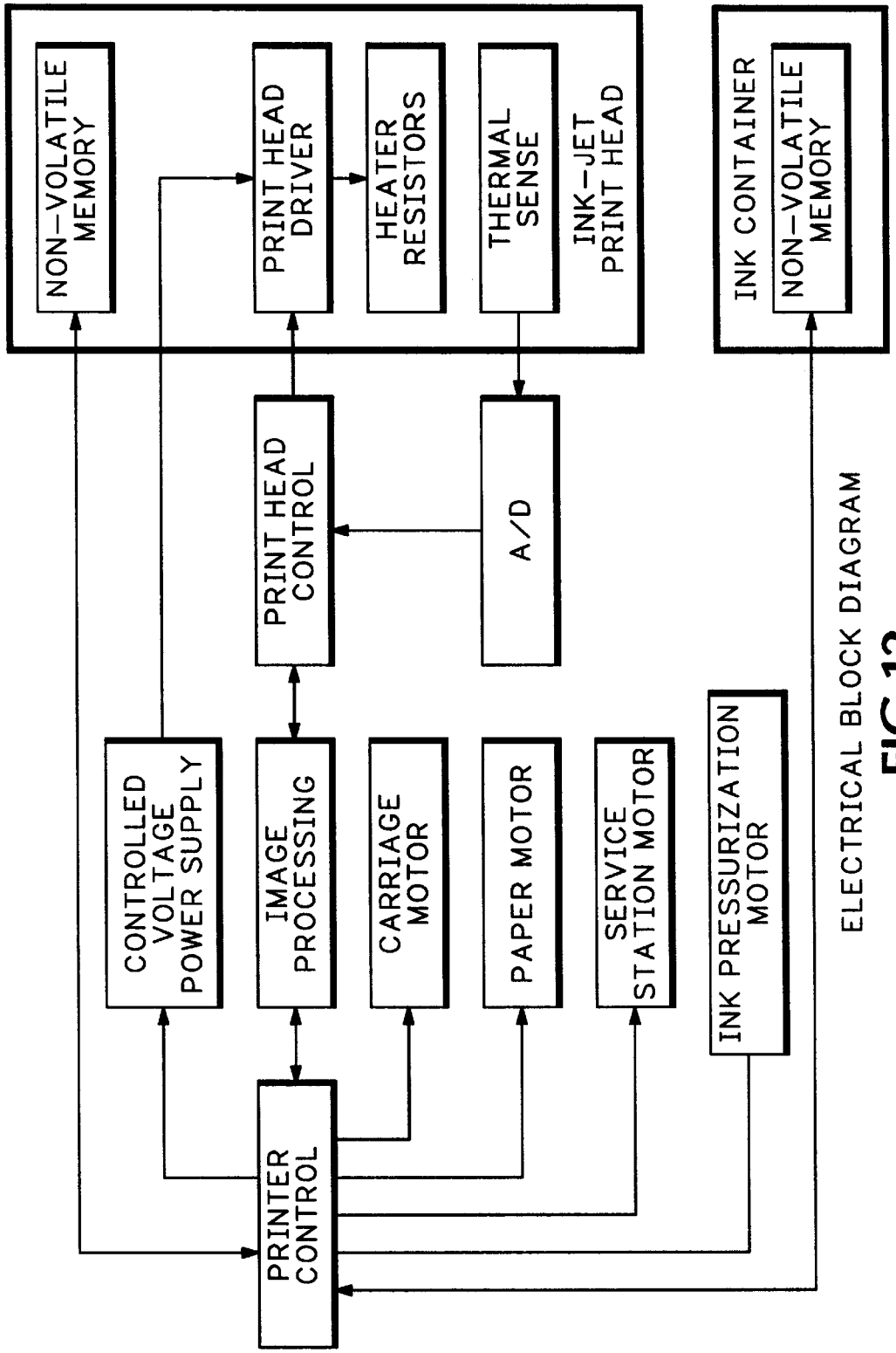

ELECTRICAL BLOCK DIAGRAM

FIG.12
(PRIOR ART)

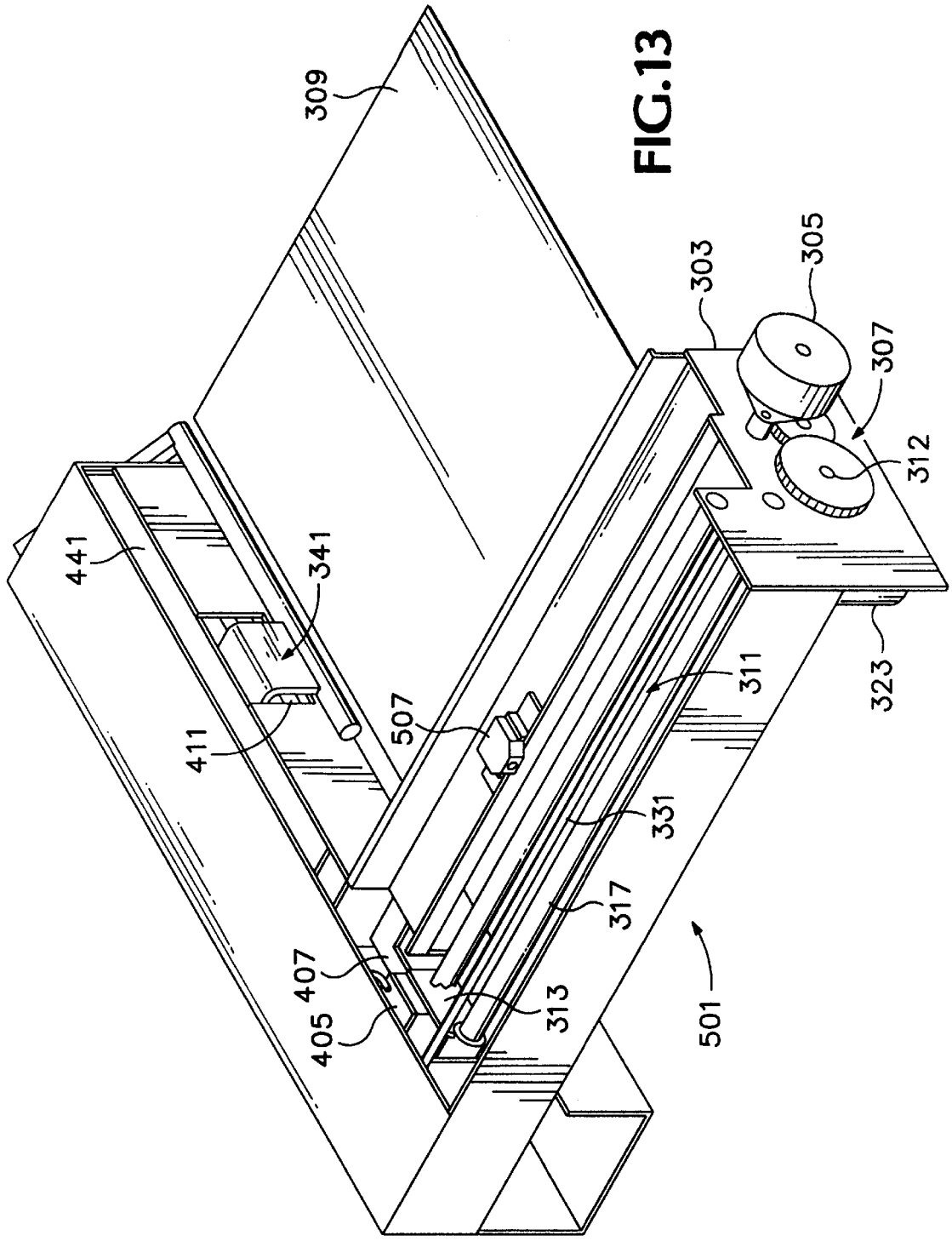
309
441
341
411
507
407
405
313
317
331
311
501
303
305
307
312
323

FIG.13

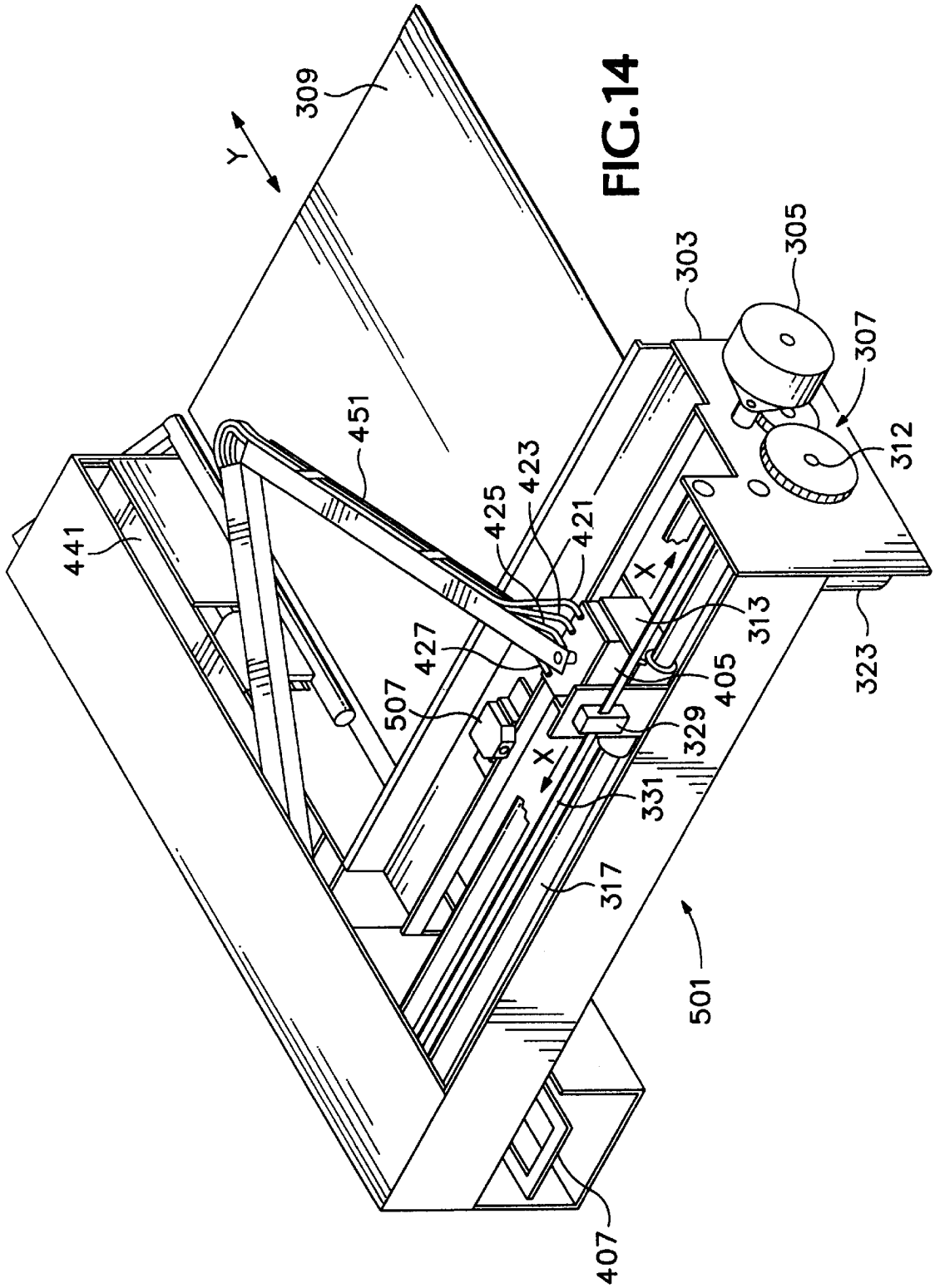
309
Y
303
305
307
312
451
423
425
421
441
X
313
427
405
323
507
329
X
331
317
501
407

FIG.14

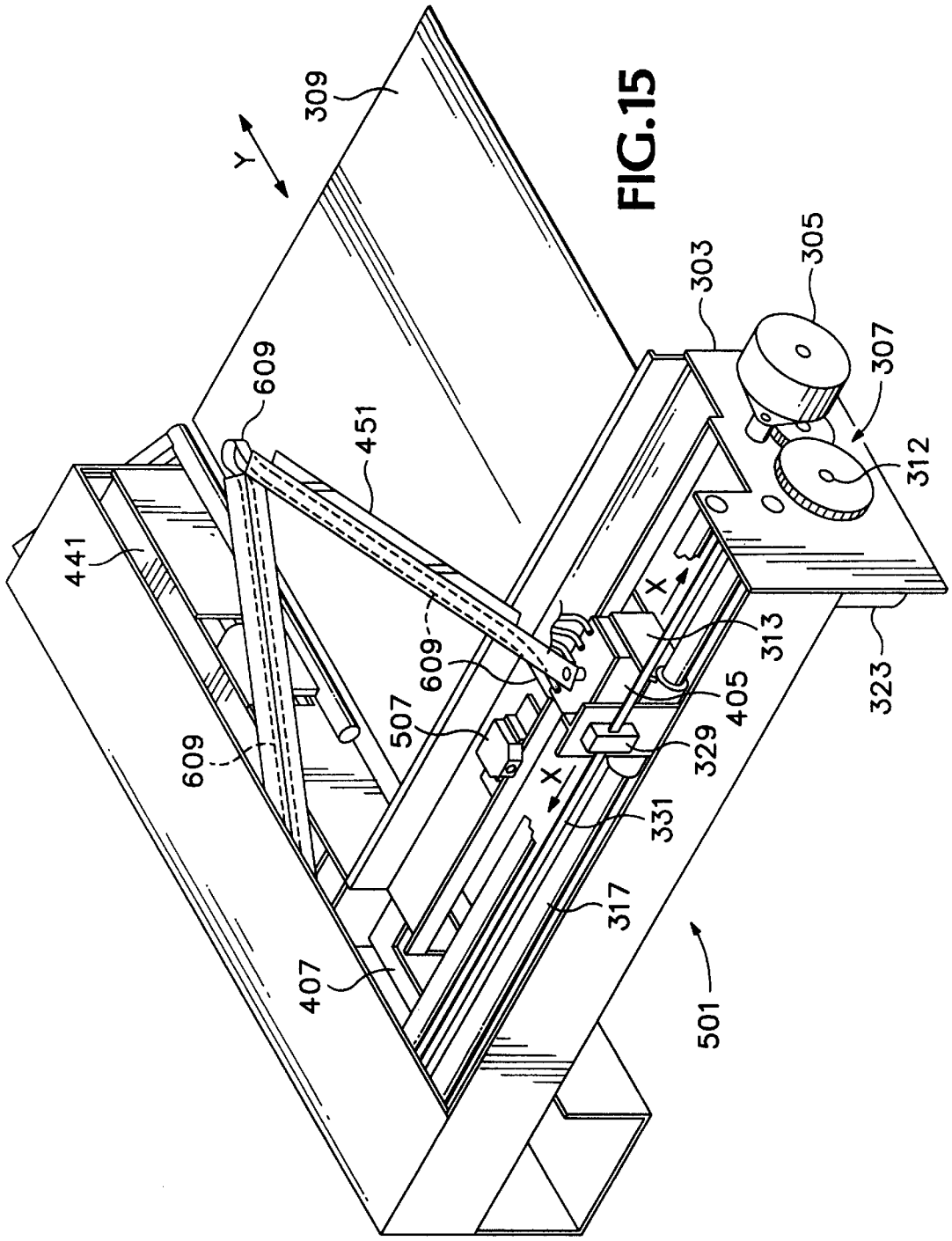
309
Y
303
305
307
312
609
451
441
609
507
609
X
313
405
329
X
331
323
317
407
501

FIG.15

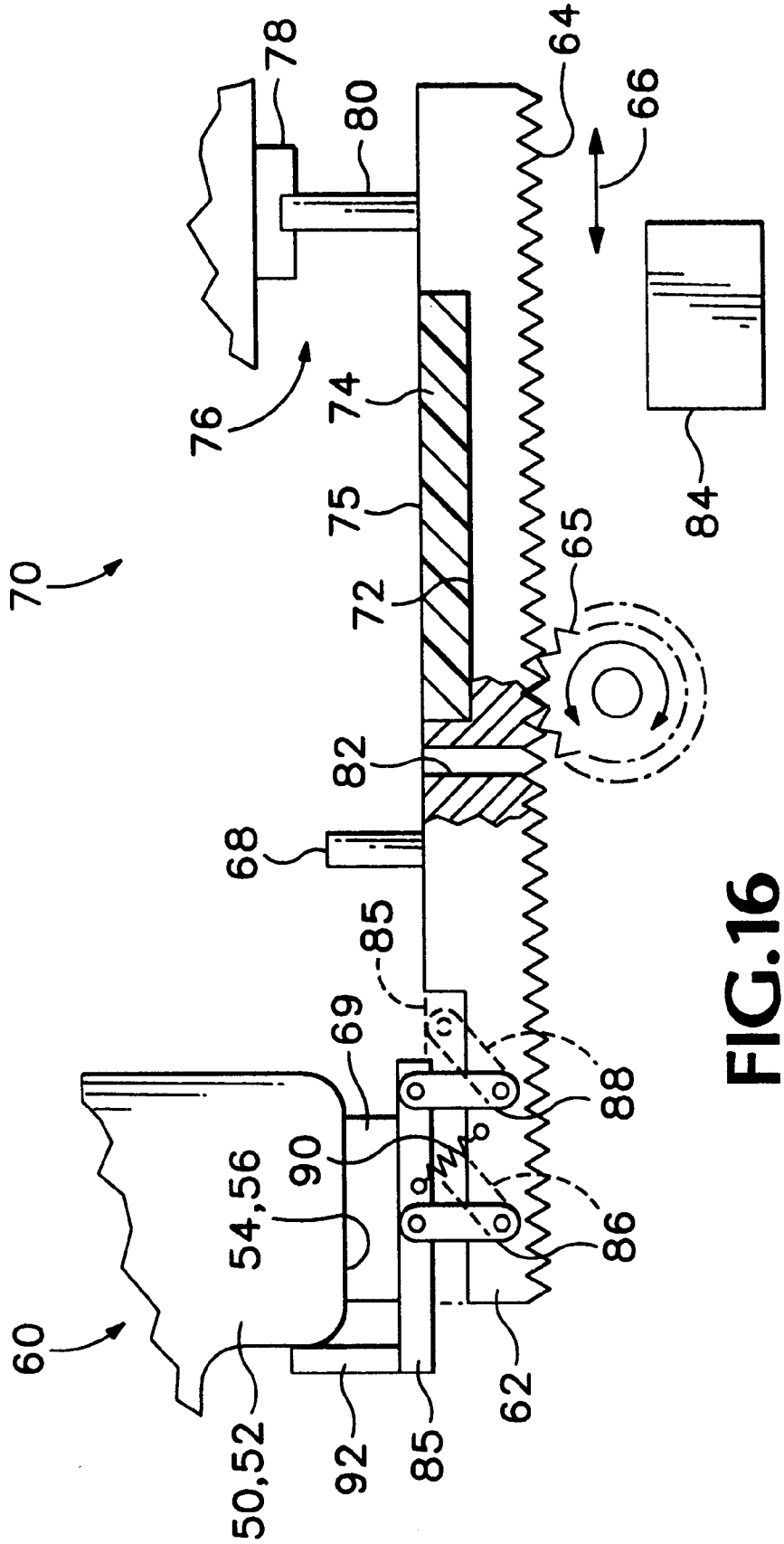
78
80
64
66
76
74
75
84
70
72
65
82
68
85
69
88
90
54,56
86
60
50,52
92
85
62

FIG.16

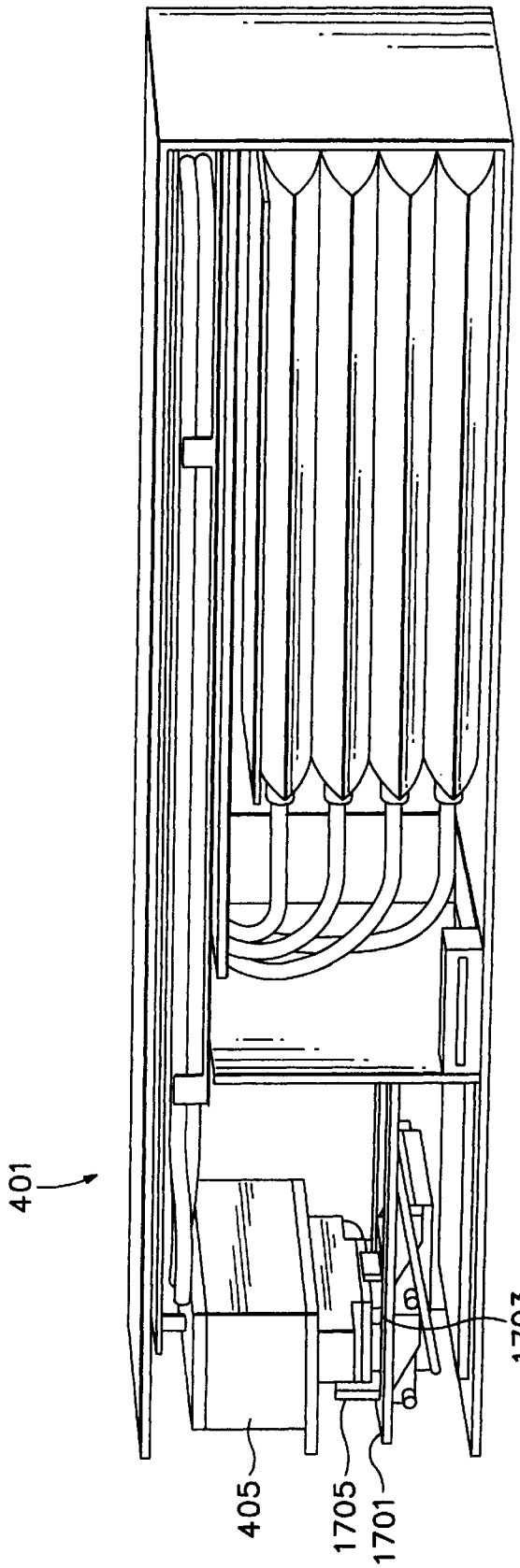

FIG.17

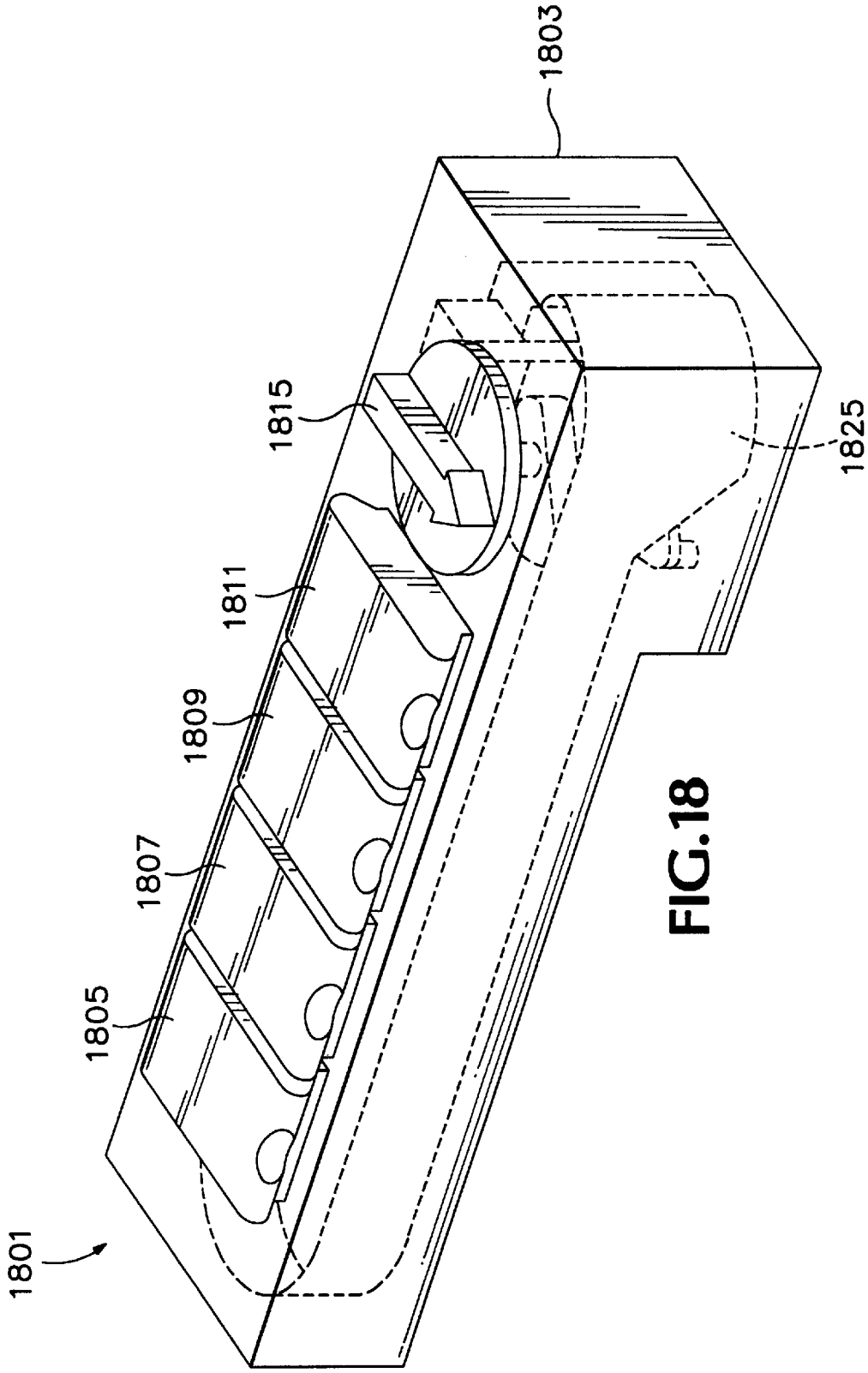

FIG.18

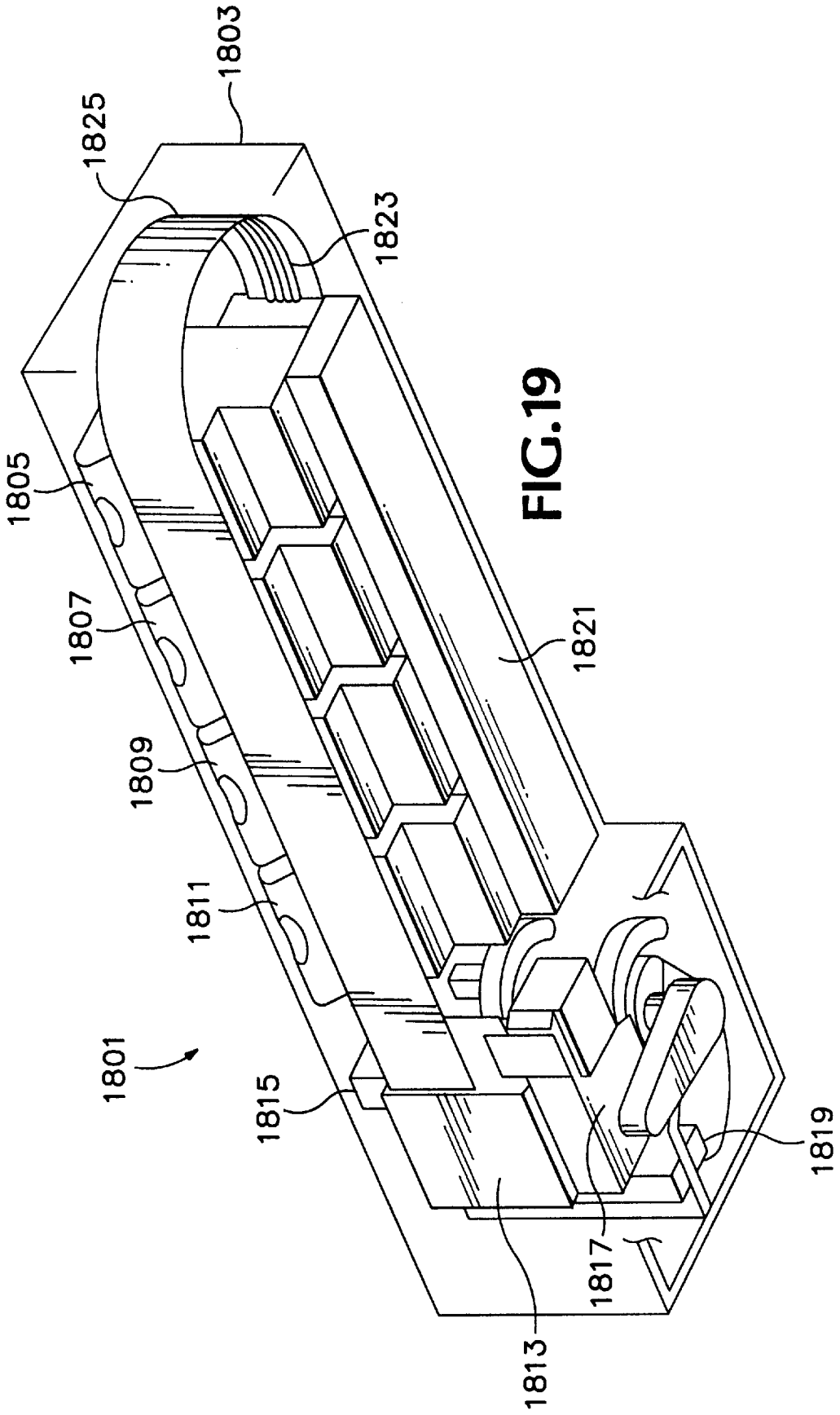
1803
1825
1823
1805
1807
1809
1811
1801
1815
1821
1819
1817
1813

FIG.19

MODULAR INK-JET HARD COPY APPARATUS AND METHODOLOGY

RELATED APPLICATION

This application is related to patent application Ser. No. 09/039,604, filed on the same date hereof, by J. Axtell et al., for a *Modular Approach for Ink-Jet Technology.*

BACKGROUND OF THE INVENTION

1. Field of the Invention

The present invention relates generally to ink-jet technology and, more particularly, to methods and apparatus for producing hard copy with modular ink-jet hard copy devices and systems.

2. Description of Related Art

The art of ink-jet technology is relatively well developed. Commercial products such as computer printers, graphics plotters, copiers, and facsimile machines employ ink-jet technology for producing hard copy. The basics of this technology are disclosed, for example, in various articles in the *Hewlett-Packard Journal,* Vol. 36, No. 5 (May 1985), Vol. 39, No. 4 (August 1988), Vol. 39, No. 5 (October 1988), Vol. 43, No. 4 (August 1992), Vol. 43, No. 6 (December 1992) and Vol. 45, No.1 (February 1994) editions. Ink-jet devices are also described by W. J. Lloyd and H. T. Taub in *Output Hardcopy* [*sic*] *Devices,* chapter 13 (Ed. R. C. Durbeck and S. Sherr, Academic Press, San Diego, 1988).

Fundamentally, FIG. **1** (PRIOR ART) depicts an ink-jet hard copy apparatus, in this exemplary embodiment a computer peripheral printer, **101**. A housing **103** encloses the electrical and mechanical operating mechanisms of the printer **101**. Generally, operation is directed by an electronic controller (usually a microprocessor or application specific integrated circuit ("ASIC") controlled printed circuit board, not shown) connected by appropriate cabling to a computer (not shown). It is well known to program and execute imaging, printing, print media handling, control functions and data processing logic with firmware or software instructions. Cut-sheet print media **105**, loaded by the end-user onto an input tray **107**, is fed by a suitable internal paper-path transport mechanism (not shown) to a printing station where graphical or photographical images and alphanumeric text is created. A carriage **109**, mounted on a slider rod **111**, scans the print medium. An encoder strip **113** is provided for keeping track of the position of the carriage **109** at any given time. A set **115** of individual ink-jet pens, or print cartridges, **117**A–**117**D is releasably mounted into the carriage **109** for easy access (generally, in a full color system, inks for the subtractive primary colors, cyan, yellow, magenta (CMY) and true black (K) are provided). Once a printed page is completed, the print medium is ejected by the transport mechanism onto an output tray **119**.

At the heart of an ink-jet hard copy apparatus is the writing instrument itself, commonly called a "print cartridge" or a "pen." As shown in FIG. **2** (the subject of separate patent applications assigned to the assignee of the present invention), an exemplary ink-jet pen **210** includes a body, or shell, **212** that encases an ink reservoir, or an ink accumulator chamber and related print head pressure regulator mechanisms (not shown), containing either fluid ink or hot melt type printing fluid. A print head **214** includes a nozzle plate **216** having a plurality of small (e.g., diameter approximately twenty μm) orifices **217** from which tiny droplets of ink (e.g., approximately ten picoliters) are ejected onto adjacent print media as the pen(s) scan across a printing zone at a high speed (approximately 25 inches per second, "ips"), depositing ink droplets in patterns that through dot matrix manipulation form alphanumeric text characters or graphic images. A flex circuit **218** includes electrical contacts **220** for connecting the pen **210** to the electronic controller. The print head elements have a limited life due to electrical, thermodynamic, and fluid dynamic loads imposed during operation. Thus, in the current state of the art, a costly and functionally significant portion of the writing system must be replaced with each print cartridge change.

The apparatus elements directly involved with inking a print media—in other words, all components of the system which come into contact with ink other than the print media itself—are referred to hereinafter as a writing engine; non-writing elements of the hard copy apparatus system are referred to hereinafter as a hard copy engine. Cartridges, pens, ink-reservoirs, and the like are referred to as ink-jet consumables. (Use of these terms is for convenience of description and is not intended as any limitation to the scope of the invention, nor should any such intention or limitation be implied therefrom.)

Having become commercially practicable in the early 1980's, ink-jet technology is a relatively young field of invention. In state-of-the-art thermal ink-jet systems, two complementary writing instruments have become commercially viable. The first is the disposable print cartridge type; the second is the semipermanent print head pen type.

The disposable writing instrument has a self-contained reservoir ("on-axis" or "on-board;" generally meaning on the pen carriage subsystem) for storing ink and providing appropriate amounts of ink to the print head during a printing or servicing cycle throughout the life of the writing instrument. When out of ink, the entire print cartridge is replaced by the end-user.

When ink-jet technology was in its early stages, print head life expectancy was more or less equivalent to the amount of ink that was held in the on-board ink reservoir. More recently, advances in the state-of-the-art for print head design and manufacture has led to a longer operational life expectancy for the print head than can be used with a reasonably-sized, non-replaceable ink reservoir. Thus, the development and commercialization of a second commercial type using a replaceable ink writing subsystem that employs a semi-permanent printing element, where the ink is supplied to the print head mechanism from a replaceable ink reservoir located either on-axis or "off-axis," (with respect to the pen carriage subsystem), such as a biased ink bladder or bag (see e.g., U.S. Pat. No. 5,359,353 (Hunt et al.) assigned to the common assignee of the present invention and incorporated herein by reference). This second type of writing instrument, the semipermanent pen, can also include mechanisms for regulating both requisite print head back pressure (in a free-ink ink-jet writing instrument) and the flow of ink from the off-board ink reservoir to the pen (shown in FIG. **2** as having an ink inlet mechanism **222** that would be coupled **223** to the replaceable or refillable off-axis ink supplies **224**). In the off-axis type of hard copy apparatus, separate, replaceable or refillable, ink reservoirs are located within the fixed apparatus housing **103**, FIG. **1**, and appropriately coupled to the moving pen set **115** via ink conduits, such as tubes that are impervious to the ink chemicals. In the on-axis type of hard copy apparatus, separate, replaceable or refillable, ink reservoirs couple to the print head ink interface directly and are located on the moving pen carriage system.

Each commercial configuration has advantages and disadvantages. The disposable print cartridge type writing

instrument is simple and easy to use but costly, as the relatively expensive print head mechanism is discarded along with the on-axis ink chamber once the ink is fully consumed. Moreover, the non-replaceable on-axis ink chamber in and of itself inherently limits the number of pages which can be printed due to its relatively small ink capacity. With the increase in print head longevity, end users have turned to refill kits or lower cost re-manufactured print cartridges that are less expensive than replacement with a new print cartridge. The use of ink refill kits is often a messy task. Still further, the need and desire for even less expensive ink continues to grow. The recent commercialization of near photographic quality ink-jet printing has increased the end user's consumption of ink much faster than in the past when simple text and color graphics imagery was the norm. Even traditional business documents are now including more images and complex graphics, thus consuming more ink. Naturally, end user replacement costs increase.

The semipermanent pen type system is potentially more economical to the end-user. The on-axis, replaceable, ink subsystem offers lower cost per page printing, but the end user is required to replace smaller ink reservoirs more often than with off-axis implementations. This is due to the physical limitation of how much ink can be reasonably carried on the carriage system. Similar to the disposable print cartridge system, there are also throughput and size penalties due to the mass and volume of the on-axis ink reservoirs. The off-axis ink reservoir type hard copy apparatus potentially can have a smaller carriage and offer larger ink reservoir; the penalty is a more complex design, including additional intra-apparatus ink delivery mechanisms which add cost. The benefits of the larger ink reservoir are in potentially higher throughput due to a lower mass carriage, lower user intervention rates, and even lower cost per page. In a full color hard copy system using a plurality of semipermanent pens, a plurality of off-axis ink reservoirs, and a concomitant set of interconnects, if a printing error occurs, the source of the problem can be difficult to locate. End-user diagnosis may be impossible unless the manufacturer provides expensive troubleshooting technology. Changes in ink formulation—either by the original equipment manufacturer or by a second source using cheaper materials and chemicals—can result in an end-user inadvertently replacing a reservoir with an incompatible model, again resulting in printing errors or even catastrophic equipment failures. Still further, in some implementations certain elements of the writing subsystem are not replaced with the ink supply, such as reservoir-to-pen tubing, valves, and the like; thus, design criteria including ink chemical formulations—must be employed so that these elements have a life expectancy as great as that of the hard copy engine components.

Moreover, all of the above configurations require a costly, permanent (i.e., matching the hard copy system life expectancy), service station which includes the primary functions of wiping print head nozzle orifices of pooled ink (wiper(s)), collecting waste ink (spittoon(s)), and providing print head protection by capping during non-use (caps or capping devices). While seemingly a simple device, ink-jet service station technology presents many design challenges. Non-replaceable servicing elements must be designed to last the lifetime of the hard copy engine. For example, design constraints are placed on both product size and printing element servicing algorithms due to the limited capacity of a permanent spittoon. The spittoon must be large enough to hold ink residue from all of the servicing operations over the lifetime of the hard copy engine, not just the writing engine. This limits the volume of ink which can be spit during each service interval. Limiting the amount of ink for print head servicing limits the design flexibility for writing instruments. Furthermore, extended usage can cause some of the servicing elements, namely the cap and wiper to fatigue and wear out, or the spittoon to cake and become a problem. Note also, that print head failures, such as leaking ink, can make the servicing elements inoperable; failed servicing components can cause failures in any new writing instrument subsequently installed. Moreover, if a new print cartridge contains an ink that is incompatible with ink which has been left on the servicing elements from a previous print cartridge, the new print cartridge may fail due to ink contamination from the service station. By not replacing the servicing elements with each new print cartridge, the choice of future inks is limited by the composition of past ink usage. Thus, permanent service stations raise manufacturing and support costs.

One key to the commercial success of both disposable print cartridge and semipermanent pen ink-jet printing systems is the high print quality—approaching photographic, electrophotographic, and laser printing quality—at a relatively low cost achieved through the use of replaceable printing elements. While it is commercially known to package and sell ink-jet components together, the present invention provides a concept using a new approach to both the ink-jet consumables and the hard copy apparatus. The goal is to obtain the benefits of both disposable and off-axis ink-jet technologies without the associated disadvantages of each. As such, re-partitioning of state-of-the-art ink-jet printing components and functions within an ink-jet hard copy apparatus is undertaken.

SUMMARY OF THE INVENTION

In its basic aspects, the present invention provides a modular ink-jet apparatus having a writing engine in which all of the individual elements involved directly with the inking process are combined into one easily storable, disposable, or refurbishable, and swappable module. A compatible hard copy engine is also provided.

In a basic aspect, the present invention provides a hard copy apparatus, having writing engine modules for inking print media, each module including ink-jet printing mechanisms for transferring ink from the writing engine modules to print media, servicing mechanisms for maintaining ink-jet functional integrity of the writing engine module, at least one predetermined ink, at least one ink containing mechanisms for containing a predetermined quantity of the at least one predetermined ink, delivering mechanisms for delivering the ink from the containing mechanisms to the ink-jet printing mechanisms, electrical mechanisms for connecting power and control to the writing engine mechanisms, and housing mechanisms for housing the printing mechanisms, servicing mechanisms, ink, ink containing mechanisms, delivering mechanisms, and electrical mechanisms, in a respective operational configuration as a selectively replaceable unit within the hard copy apparatus; and, hard copy engine mechanisms for delivering print media to and from a printing zone location of a hard copy engine printing station and for locating the writing engine relative to the printing zone location.

In another basic aspect, the present invention provides a writing engine for use with a hard copy apparatus adapted for selectively receiving a writing engine therein, including: ink-jet printing mechanisms for transferring ink to print media; at least one predetermined ink; at least one ink

containing mechanisms for containing a predetermined quantity of the at least one predetermined ink; delivering mechanisms for delivering the ink from the containing mechanisms to the printing mechanisms; electrical mechanisms for connecting power and logic signals to the writing engine; servicing mechanisms for servicing the ink-jet printing mechanisms; housing mechanisms for housing the printing mechanisms, ink, ink containing mechanisms, delivering mechanisms, electrical mechanisms, and servicing mechanisms in a unified mounting containment providing a replaceable modular unit; and the housing mechanisms and the ink-jet printing mechanisms having mechanisms for selectively interfacing with the hard copy apparatus when received therein such that the ink-jet printing mechanisms is positioned for printing ink onto the print media.

In another basic aspect, the present invention provides writing module subsystems for an ink-jet hard copy apparatus adapted for receiving at least one writing module subsystem in an operational configuration with the ink-jet hard copy apparatus, each of the writing module subsystems including: all components of the ink-jet hard copy apparatus which come into contact with ink, and mechanisms for selectively coupling and decoupling a writing module subsystem as a unit to and from the hard copy apparatus, respectively, such that writing module subsystems are selectively swappable. The components included mechanisms for protecting fluidic integrity of printhead components when the writing module subsystem is decoupled from the hard copy apparatus.

In another basic aspect, the present invention provides a writing module subsystem for an ink-jet hard copy apparatus adapted for receiving the writing module subsystem in an operational configuration therewith, including: all wet components of the ink-jet hard copy apparatus; mechanisms for electrically connecting the writing module subsystem to the ink-jet hard copy apparatus; mechanisms for mechanically aligning the writing module subsystem to the ink-jet hard copy apparatus; and mechanisms for selectively off-loading the writing module subsystem as a unit from the hard copy apparatus and maintaining functional integrity of the wet components while the writing module subsystem is off-loaded such that a writing module subsystem is reusable by reinserting the writing module subsystem into the ink-jet hard copy apparatus.

In yet another basic aspect, the present invention provides an ink-jet writing engine including a unitary module containing all wet components for an ink-jet hard copy apparatus mounted respectively in an operational construct, having an electrical interface and a mechanical interface for integrating the module into a hard copy apparatus such that there is no fluidic interface between the module and the hard copy apparatus other than the transfer of printing fluid from the module onto print media within the hard copy apparatus.

In yet another basic aspect, the present invention provides an ink-jet writing engine including: a housing; an ink reservoir within the housing; ink contained within the reservoir; a writing instrument within the housing; fluidic coupling between the ink reservoir and the writing instrument; a service station within the housing mounted in operational relationship for servicing the writing instrument; and electronic controls mounted within the housing connected to at least the writing instrument and containing control information specific to the writing engine printing and servicing functionality.

In still another basic aspect, the present invention provides a hard copy engine for a hard copy apparatus adapted for using a cassette-type writing engine containing all wet components of an ink-jet system, including at least one ink reservoir having ink therein fluidically coupled to an inking mechanisms within the writing engine for transferring ink from the writing engine to print media within the hard copy apparatus using ink-jetting processes. The hard copy engine includes: a printing station; mechanisms for transporting print media to and from the printing station; and mechanisms for interfacing the hard copy engine mechanically and electrically with the writing engine, the mechanisms for interfacing including a cassette bay for receiving the writing engine therein for positioning the writing engine relative to the hard copy apparatus, mechanisms for mechanically and electrically engaging and activating the writing engine wet components, and mechanisms for aligning the inking mechanisms of the writing engine to the printing station.

In another basic aspect, the present invention provides a hard copy engine including: an ink-jet printing station; a print media transport mounted relative to the printing station to move print media to and from the printing station; a writing engine mount having a writing instrument interface for aligning writing engine ink-jet writing instruments to the printing station such that writing engines are interchangeable, and an ink-jet service station activator mounted relative to the writing engine mount such that the activator interfaces with a writing engine service station, wherein the hard copy engine has no components that contact ink.

In another basic aspect, the present invention provides a modular hard copy apparatus including: a first unitary module including all hard copy engine components, the first unitary module having a first equipment life expectancy; a second unitary module including all ink-jet writing engine components, the second unitary module having a second equipment life expectancy substantially shorter than the first equipment life expectancy; and located on the first unitary module and the second unitary module, complementary mechanisms for selectively interfacing the second unitary module into the first unitary module such that inserting the second unitary module into the first unitary module automatically forms an operationally ready ink-jet hard copy apparatus wherein the second unitary module is replaceable. Furthermore, the second unitary module is replaceable a plurality of times wherein the number of replacement times is approximately equal to the ratio of the first equipment life expectancy to the second equipment life expectancy.

In another basic aspect, the present invention provides an ink-jet hard copy apparatus including: an integrated first module including all hard copy engine dry components, the integrated first module having a first equipment life expectancy; an integrated second module including all ink-jet writing engine wet components, the integrated second module having a second equipment life expectancy substantially shorter than the first equipment life expectancy; and located on the integrated first module and the integrated second module, complementary mechanical and electromechanical mechanisms for selectively interfacing the integrated second module into the integrated first module such that inserting the integrated second module into the integrated first module automatically forms an operationally ready ink-jet hard copy apparatus wherein the integrated second module is replaceable throughout the first equipment life expectancy.

In a further basic aspect, the present invention provides a method for operating a hard copy apparatus, including capturing an insertable writing engine containing all ink-jet wet components into a compatible hard copy engine such that ink-jet printing functions and ink-jet component servic-

ing functions are automatically integrated into the hard copy apparatus by inserting the writing engine therein.

In another basic aspect, the present invention provides an apparatus for producing hard copy including: an ink-jet writing engine, having a printing element; and an ink-jet hard copy engine, having a receiving station wherein the writing engine and the hard copy engine are selectively interlocked such that the hard copy engine seizes the printing element and further such that the hard copy engine can selectively remove the printing element from the writing engine and transport the printing element to a position for ink-jet printing and selectively return the printing element to the writing engine when not ink-jet printing.

In another basic aspect, the present invention provides an improved ink-jet hard copy system including the combination of a plurality of interchangeable writing engines in the form of cassette modules, each cassette module containing all wet components of an ink-jet hard copy system, the plurality providing differing ink-jet printing capabilities; and at least one hard copy engine, containing no wet components of an ink-jet hard copy system, for selectively receiving at least one cassette module therein for forming an operational ink-jet hard copy system together therewith.

In another basic aspect, the present invention provides an ink-jet system, the system including (1) a writing engine cassette, including: a printing component having an inlet for receiving at least one ink therethrough, a print head, and a manifold component for transferring ink from the inlet to the print head, at least one ink reservoir component fluidically coupled to the printing element; at least one formulation of ink contained within the reservoir; a servicing component for capping and wiping the print head and for receiving waste ink spit by the print head during servicing thereof; a first electronic controller component connected to the print head; a first electrical connector component for connecting power and control signals to the cassette; electrical wiring connecting the first electronic controller to the first electrical connector; a housing containing all components of the cassette; and (2) a hard copy engine, including: a cassette bay for receiving the writing engine cassette therein; a carriage for receiving the printing component when the cassette is received in the cassette bay and for translationally moving the printing component out of and back into the writing engine cassette; a reversing motor coupled to the carriage for providing translational motion thereto; a mechanism for feeding print media to a position proximate to the printing component when the carriage is translationally moving the print component; a second electrical connector component for connecting to the first electrical connector component when the cassette is received into the cassette bay; a second electronic controller for providing power and control signals; electrical wiring connecting the second electrical connector to the second electronic controller; a mechanism for coupling to and activating functions of the servicing component when the cassette is received in the cassette bay; and a housing encompassing the hard copy engine.

In another basic aspect, the present invention provides a hard copy apparatus including: a hard copy engine, having a print media transport subsystem for moving print media through a print zone region of the hard copy engine and a cassette bay for receiving writing engines therein; and a plurality of writing engines for being selectively inserted into the cassette bay and removed from the cassette bay such that insertion into the cassette bay aligns the writing engine to the print zone region, each of the writing engines containing essentially all wet components of an ink-jet hard copy apparatus and wherein each of the writing engines has differing printing characteristics.

In another basic aspect, the present invention provides an ink-jet printing system including: a hard copy engine having a cassette bay; a first writing engine cassette including ink having a first composition; and a second writing engine cassette including ink having a second composition, wherein the first composition and the second composition have mutually incompatibilities for ink-jet printing, the cassette bay selectively receiving either the first writing engine cassette or the second writing engine cassette for printing such that no contamination of the hard copy engine is incurred due to the mutual incompatibilities during serial selection of the first writing engine and the second writing engine.

It is an advantage of the present invention that modular writing subsystems and modular hard copy engine subsystems can be independently developed as improvements to the state of the art progress.

It is an advantage of the present invention that it provides an OEM with the capability of repeatedly converting an installed base of hard copy engines to improved writing engine technologies.

It is an advantage of the present invention that it permits designs which match ink reservoir volumes to print head life expectancy, optimizing component matching for both performance and cost.

It is an advantage of the present invention that it provides a modular approach to ink-jet writing systems that is convenient and economical for end-users and original equipment manufacturers ("OEM") alike.

It is an advantage of the present invention that its modular replacement features virtually eliminate the need for ink-jet writing system troubleshooting procedures.

It is an advantage of the present invention that it improves the manufacturability of ink-jet hard copy engine apparatus by eliminating assembly operation "wet" processes, i.e., those dealing with bulk supplies of ink, tubes filled with ink, and the like.

It is another advantage of the present invention that it uses the fewest number of replaceable individual components, if any, and fewest number of interfaces between the writing engine and the hard copy engine, thereby reducing cost and complexity of operation and use.

It is another advantage of the present invention that full replaceability of the writing engine in a single module provides more degrees of freedom to design modifications in accordance with the advancement of the state of the art and to solve writing engine problems in an installed base.

It is another advantage of the present invention that it permits the OEM to introduce upgrades at very low cost, if any at all, to the end user.

It is another advantage of the present invention that limited-life service station components can be manufactured to specifications for the estimated life of the writing engine module rather than that of the hard copy engine, thereby lowering manufacturing cost.

Because writing system failures can be caused by both too little or too much usage, it is an advantage of the present invention that it provides a writing engine that can have an estimated life expectancy based on either time or usage, e.g., 1-year or a set number of printed pages, whichever occurs first.

It is a further advantage of the present invention that it is adaptable to a variety of repeatedly changing implementa-

tions based on type of use: home, office, recreational hobby, child computer use activities, and the like.

It is a further advantage of the present invention that it is adaptable to providing the end user with a variety of selectively swappable modules targeted to producing different hard copy results, e.g., continuous black text, color graphics, grey scale imaging, full color photographic quality printing, and the like, based upon the user's immediate need.

It is a further advantage of the present invention that it is adaptable to providing the end user with a variety of cost options, e.g., slower/lower cost modules versus faster/higher cost modules; low quality/low cost modules versus photographic quality/high cost modules.

It is still a further advantage of the present invention that it provides the OEM with a simpler recycling contingencies.

It is still another advantage of the present invention that it provides the OEM with refurbishing and re-marketing capability.

It is still another advantage of the present invention that it provides a more environmentally conscious product.

It is still another advantage of the present invention that it provides the OEM and end user with simpler, plug-and-play, product testing procedures.

It is still another advantage of the present invention that a unitary modular writing engine provides the OEM a higher shipped-product reliability factor.

It is yet another advantage of the present invention that it reduces the printing cost per page.

It is yet another advantage of the present invention that it allows an ink-jet hard copy apparatus with a smaller work-space footprint.

It is yet another advantage of the present invention that it allows more variety of writing systems for specialty needs.

It is a further advantage of the present invention that it allows separate hard copy engine and writing engine product development strategies.

It is a further advantage of the present invention that it allows simplified commercial distribution supply chain management.

It is a further advantage of the present invention that it permits separate sourcing of hard copy engines which does not require intimate knowledge of ink-jet technology.

It is yet a further advantage of the present invention that it permits repeated removal and storage of an ink-jet writing subsystem without the need for special mechanisms to prevent degradation prior to reuse.

Other objects, features and advantages of the present invention will become apparent upon consideration of the following explanation and the accompanying drawings, in which like reference designations represent like features throughout the drawings.

BRIEF DESCRIPTION OF THE DRAWINGS

FIG. **1** (PRIOR ART) is a perspective view, schematic drawing of an exemplary commercial ink-jet hard copy apparatus.

FIG. **2** is a perspective view, schematic drawing of an ink-jet pen as may be used in an apparatus such as shown in FIG. **1**.

FIG. **3** is a perspective view, schematic drawing (partial cutaway) of pertinent components of a modular hard copy engine in accordance with the present invention for use in conjunction with a writing engine in accordance with the present invention.

FIG. **4** is a perspective view, partially exploded, schematic drawing of a modular writing engine in accordance with the present invention for use in conjunction with a hard copy engine as shown in FIG. **3**.

FIG. **4**A is an exploded view of the writing engine as shown in FIG. **4**.

FIG. **5** is a perspective view, schematic drawing of the writing engine as shown in FIG. **4** coupled into the hard copy engine components of FIG. **3**.

FIG. **5**A is a perspective view, schematic drawing of the writing engine as shown in FIG. **4** being inserted into an a hard copy engine as shown in FIG. **3**.

FIG. **6** is a perspective view (bottom angle), schematic drawing of a printing module of the writing engine as shown in FIG. **4**.

FIG. **7** is a fluidic block diagram in accordance with the present invention as shown in FIG. **4**.

FIG. **8** (Prior Art) is a fluidic block diagram for a disposable print cartridge based ink-jet system.

FIG. **9** (Prior Art) is a fluidic block diagram for a replaceable ink supply based ink-jet system.

FIG. **10** is an electrical block diagram in accordance with the present invention as shown in FIG. **4**.

FIG. **11** (Prior Art) is an electrical block diagram for an HP™ DeskJet™ 850C computer printer, being of the type using a disposable print cartridge system as shown in FIG. **8**.

FIG. **12** (Prior Art) is an electrical block diagram for a hard copy apparatus of the type using a replaceable ink supply system as shown in FIG. **9**.

FIG. **13** is a perspective view in accordance with the present invention as shown in FIGS. **4** and **5**A with the writing engine module installed in the hard copy engine in a "ready mode."

FIG. **14** is a perspective view in accordance with the present invention as shown in FIG. **13** with the writing engine module installed in the hard copy engine in a "printing mode."

FIG. **15** is a perspective view in accordance with the present invention as shown in FIG. **14** to demonstrate a trailing flex circuit.

FIG. **16** is an elevation drawing schematically depicting an exemplary embodiment service station, its hard copy engine interface, and its operation as may be employed in the present invention as shown in FIGS. **13** and **14**.

FIG. **17** is a perspective view of an alternative embodiment of the present invention as shown in FIG. **4**, in which an alternative service station construct is depicted.

FIG. **18** is an alternative embodiment of a writing engine in accordance with the present invention in a perspective view (overhead angle).

FIG. **19** is the alternative embodiment of the writing engine as shown in FIG. **18** in a perspective view (bottom angle).

The drawings referred to in this specification should be understood as not being drawn to scale except if specifically noted.

DESCRIPTION OF THE PREFERRED EMBODIMENT

Reference is made now in detail to a specific embodiment of the present invention, which illustrates the best mode presently contemplated by the inventors for practicing the

invention. Alternative embodiments are also briefly described as applicable. While shown as "prior art," it should be recognized that FIG. **1** also represents a generic hard copy apparatus for both the purpose of explanation and the basis for claims to the present invention with respect to components that would be well-know in the art; e.g., housings, paper trays, controls, and the like, for which further detailed explanation is extraneous to an understanding of the present invention. Subtitles are provided herein simply for the convenience of the reader; no limitation on the scope of the invention is intended nor should any be implied therefrom.

Hard Copy Engines

In accordance with the present invention, FIG. **3** demonstrates components of a hard copy engine **301** adapted to interface with a writing engine (as will be described in detail hereinafter with respect to FIG. **4**). Outer frameworks, paper trays, electronic controller boards, and other components of a hard copy engine are well-known to persons skilled in the art and inclusion of details is not necessary to an understanding of the present invention. Thus, FIG. **1** depicts those certain hard copy engine features of a complete hard copy apparatus as would be known in the art and used in accordance with the present invention.

A stanchion **303** of frame **337** has a print media stepper motor **305** and print media drive roller transmission **307** suitably mounted thereon. An exemplary print medium, paper sheet **309**, is shown, having an swath printing zone **311**, as indicated by arrow and phantom lines, which has a swath height approximately the same as a print head orifice height dimension; the swath width is approximately edge-to-edge across the paper sheet. Note however, that as a variety of print head embodiments are known in the art, the printing zone **311** is not limited in practice to merely the swath area indicated; e.g., theoretically, a page length print head could print an entire sheet in one pass. A lower media drive roller **312** moves the media through the printing zone **311** during a printing cycle, usually stepping the media one swath after one or more scans of a printing element. A printing module carriage **313** is adapted for riding on an anti-rotation rod **315** and slider bar **317**. A variety of printing module carriage **313** designs can be implemented; in the exemplary implementation shown, the carriage **313** includes a tubular slider **319** encompassing the slider bar **317** and an idler wheel **321** riding atop the anti-rotation rod **315**. A reversible drive motor **323** has a drive shaft **325** coupled to a drive belt **327** which in turn is coupled to the carriage **313** such that bidirectional translation motion can be imparted to the carriage **313** to scan a printing module (as will be described in detail hereinafter with respect to FIG. **6**) mounted therein across the print medium **309**. Other carriage drive mechanisms such as cable-capstan drives, screw drives, and the like as would be known in the art, are compatible with the present invention. Carriage position is tracked through an encoder module **329** mounted on the carriage **313** and an encoder strip **331** mounted on the frame **337**; see e.g., U.S. Pat. No. 4,789,874 (Majette, assigned to the common assignee of the present invention and incorporated herein by reference).

While various implementations of the individual hard copy engine elements just described are well-known in the art, the modular adaptation for interface with a unitary writing engine module is unique. In this regard, the printing module carriage **313** includes a bracket **333** having a recess **335** cut therein for releasably receiving a printing module component of a writing engine such that the printing module is captured in a fixed relationship to the carriage **313** by action of installing the entire writing engine module into the hard copy engine **301**, or subsequent to insertion of the writing engine by action of moving the carriage to mate with the writing instrument. Thus, the printing module is extractable out of the writing engine to scan across the printing zone **311** and then re-insertable back into the writing engine. The carriage **313** uses its recess **335** and datums **336** as necessary to align the printing module properly with respect to the media printing zone **311**.

In other words, along with the development of modular writing engines, the hard copy engine **301** includes specific, compatible writing engine module docking features. The carriage **313** is operationally located to interlock with a writing instrument of a writing engine either as the writing engine is received into the hard copy engine or subsequent to insertion of the writing module by action of moving the carriage to mate with the writing instrument. Note that the hard copy engine **301** is also a modular design specifically adapted for interfacing with a design compatible writing engine module; an ink-jet printing sub-module of the writing engine module is automatically properly engaged and aligned for scanning across a print zone on the print media by the simple act of inserting such a writing engine into the hard copy engine. In the shown embodiment, the hard copy engine **301** has sub-components adapted to take the printing module out of an inserted writing engine to perform printing operations and to put the printing module back into the writing engine when not printing. Clearly, a variety of other commercial implementations are possible. See, e.g., FIGS. **18** and **19** described hereinafter.

Although not illustrated, it is specifically intended by the inventors that a hard copy engine in accordance with the present invention can have more than one writing engine cassette bay for receiving writing engines therein. Moreover, it is recognized that jukebox mechanisms also can be employed to change writing engines in a cassette bay.

Writing Engines

FIG. **4** depicts an exemplary embodiment of a writing engine **401**. As will be obvious to a person skilled in the art, a wide variety of writing engine modules can be designed to fit the needs of a particular commercial implementation. Fundamentally, it is the intent of the inventor's to have a writing engine **401** that separates "wet" ink-jet components, comprising those components which come into contact with ink or directly support components in contact with ink (shells, print head electrical connections, and the like) from the rest of the hard copy apparatus. A housed writing engine unit that is simply inserted by the end-user in the manner of a cassette construct, yet with that simple action achieves full system integration, is a goal in this ink-jet hard copy system re-partitioning. At the end-of-life of the writing engine unit, it is easily removed and disposed of or returned to the OEM for refurbishing or recycling. The hard copy system is rejuvenated by replacing a used, cassette-like, inking system with a new one. The system is altered by swapping a cassette having first printing characteristics with a cassette having different printing characteristics, e.g., a black text printing ink writing engine module for document printing versus a neon ink writing engine module for t-shirt transfer sheet printing.

A writing engine housing **403**, forms an encasement for the components of the writing engine **401**; the specifications of this housing are subject to the specific design implementation of the hard copy engine to writing engine interface. The housing **403** encloses a printing submodule **405**, a service station module **407**, and at least one ink reservoir—four shown for a full color CMYK implementation—**411**,

413, 415, 417, along with associated ink flow tubes 421, 423, 425, 427, and reservoir-to-tube flow control fluid couplings, such as valves, 431, 433, 435, 437, respectively. The ink flow tubes 421–427 can be appropriately harnessed and guided into and out of the housing 403, where housing facia 404 is provided with an appropriate cut-outs 443, 447 to accommodate the cassette-like insertion of the writing engine 401 into the hard copy engine 301 and subsequent extraction-retraction motion of writing engine components involved in scanning across a sheet of print medium adjacent positioned by the paper transport mechanism. In a simpler construct, rather than a fixed housing facia 404, a simple tear-away covering can be implemented (similar to that commonly used for photocopier toner cartridges) attached so as to be stripped off by the end-user just prior to insertion of the writing engine into the hard copy engine. In order to maximize advantages of the present invention, it is beneficial to simplify the writing engine module 401 such that from the end-user point of view it is both completely integrated for a simple, one-step, cassette-like insertion or removal and completely disposable. For manufacturability, it is beneficial to keep the writing engine's outer shell simple and inexpensive. A simplified plastic, reinforced cardboard, or the like, shell with less molding requirements than a fully molded housing accomplishes this goal.

In the shown exemplary embodiment, the ink reservoirs 411–417 comprise a simple Mylar™ bag, or multiple bag, construct, fixedly located between a housing 403 wall, or bottom, and a pressure plate 441. The ink reservoirs 411–417 may be of any shape, size, construction, and configuration as is suited to a particular writing engine 401 modular implementation.

In the preferred embodiment, the entire writing engine module components comprise a one-time use, disposable, or manufacturer's recyclable or refurbishable, unit—recognizing that "one-time use" also means intermittently swappable with other writing engine modules of different printing characteristics. However, it is also envisioned that writing engine can be designed to provide replaceable or refillable ink reservoirs (as described hereinafter with respect to FIGS. 18 and 19). This, however, would obviate some of the advantages set forth in the Summary of the Invention section above, particularly those related to upgrades that are user transparent, e.g., changes in ink formulations, one-time use life cycle design of service station module components, and the like. Nonetheless, there may be a need for replaceable or refillable ink reservoirs commercially; therefore, replacement reservoirs, multicolor reservoir set, and refill kits (e.g., ink filled syringes as is known in the art) can be manufactured and supplied.

Returning to FIG. 3, the hard copy engine 301 is provided with an ink reservoir pressurization mechanism 339. An L-shaped, pressure applicator 341 has a substantially flat arm 343 adapted for sliding across the top of a pressure plate 441 (FIGS. 4, 14 & 15) movably mounted, such as on a conventional sliding mount (not shown), to the housing adjacent the ink reservoirs 411–417 in the writing engine 401. As the writing engine 401 is inserted into the hard copy engine 301, the arm 343 contacts the plate 441. The arm 343 is mounted on a rod, or other suitable mount, 347 connected to a pressure plate set-and-return lever 349. By spring loading (not shown) the rod 347 or the lever 349, a positive pressure is applied to the ink reservoirs 411–417 by applying a load force to the pressure plate 441 via the arm 343. In other words, by rotation (mechanically or electromechanically, see phantom line 345, FIG. 3) of the pressurization mechanism 339, the pressure plate 441 is forced to exert a pressure on the ink reservoirs 411–417 in order to transfer ink from within the reservoirs to the printing submodule 405 via the valves 431–437 and tubes 421–427. The set-and-return lever 349 is also configured for counter-forcing the bias during installation of a writing engine module 401 into the hard copy engine 301. Returning to FIG. 4, the housing facia 404 is provided with an aperture 443 for receiving the arm 343 therethrough upon inserting the writing engine 401 into the hard copy engine 301 such that the pressure plate 441 is in contact with the arm.

Note that a variety of printing submodule 405 writing instruments can be adapted for use in accordance with the present invention or proprietary printing modules can be newly designed. A specific exemplary embodiment is described hereinafter with respect to FIG. 6. This also means that a variety of refilling techniques and apparatus are also available to the system designer in the state of the art. Ink transfer from an off-axis reservoir need not be limited to the specific exemplary embodiments depicted in the drawings. Any equivalent adapted to a specific implementation may work equally as well. For example, as taught in U.S. Pat. No. 4,968,998 (Allen, assigned to the common assignee of the present invention) for a *Refillable Ink Jet Print System,* service station ink injection techniques are known in the art.

Similarly, a variety of fluid interconnects and valve mechanisms are available to the system designer. Simple, self-sealing make-or-break types, needle-and-septum types, one-way flow types, and the like, can be employed as would be recognized by a person skilled in the art. Another example in a more sophisticated implementation for an off-axis reservoir with a valved tubing interface between the reservoir and a pen is taught in allowed U.S. patent application Ser. No. 08/523,424 (Johnson et al., assigned to the common assignee of the present invention and incorporated herein by reference) for an *Ink-Jet Off Axis Ink Delivery System,* in which a controlled, multi-position valve is employed. Other than to recognize that the present invention is not limited to the specific exemplary embodiments depicted in the drawings, further detail for off-axis ink supplies is not essential to an understanding of the present invention. In the preferred embodiment, all fluid connections are non-detachable, improving reliability, reducing cost of manufacture, and reducing size.

As shown in FIGS. 4, 14 and 15, a scissored swing arm 451 has a first end mounted inside the housing via a conventional pivot mount to allow freedom of motion out and back into the writing engine 401. The writing engine housing 403 has an appropriate slot 406 (FIGS. 14 & 15 only) allowing the swing arm 451 to swing in and out of the housing's shell. To carry the ink tubes 421–427 (FIGS. 4 and 14) and electrical wiring, flex circuit 609 (FIG. 15), the swing arm 451 has appropriately sized grooves 455 (best seen in FIG. 15) and clip tabs 457, 459 for securing the tubes and wires in the grooves. The second end of the swing arm 451 is pivotally affixed to the printing submodule 405. When the carriage 313 (FIG. 3) of the hard copy engine 301 extracts the printing submodule 405 from the writing engine 401, the swing arm mounted tubes 421–427 and circuit 609 follow.

System Integration

As can now be recognized and as shown in FIGS. 5 and 5A, the writing engine 401 and hard copy engine 301 are adapted for mating in a sliding press-fit, or snap-fit, instituted by the end-user's cassette-like insertion of the writing engine into the hard copy engine. Upon or subsequent to insertion, the printing submodule 405 is automatically registered into the recess 335 (FIG. 3) of carriage 313. The

printing submodule **405** is mechanically coupled to the carriage **313** in an appropriate orientation for scanning by the simple action of the installation of the modular writing engine **401** into the hard copy engine **301**. Again, more complicated, automated, integration systems, like jukebox mechanisms, can be employed for changing writing engine modules.

Returning briefly to FIG. **4**, it is further intended that electrical connection between the writing engine **401** and the hard copy engine **301** be affected during the same installation via electrical connector **445** for which an aperture **447** is provided in housing facia **404**. A standard electrical connector **445** as known in the art and desired for a specific implementation may be employed. Thus, the number of interface elements between the writing engine **401** and hard copy engine **301** are reduced to a simple electrical interface and a few simple mechanical interfaces. No fluid coupling or interface is required between the writing engine **401** and the hard copy engine **301**. This solves many of the prevalent problems of the prior art as listed in the Background of the Invention section above. Inserting a writing engine into a hard copy engine adapted therefor automatically provides the end-user with a fully integrated hard copy apparatus that is ready for use. Use variants or refurbishing are as simple as swapping one writing engine for another.

FIG. **5**A depicts further features and design modifications of the modular concept for hard copy engines and writing engines. The hard copy engine **301** is provided with a base frame **501** specifically designed for receiving the writing engine **401** into a framed cavity **503** forming a cassette bay to accommodate a simple, one-step, cassette-like insertion of a writing engine **401** as depicted by the arrow **505**. As an important advantage of the present invention, it is intended that the printing submodule **405** (FIGS. **4**, **5** & **6**) be a low-mass element. Only a limited quantity of ink is on-board during printing. Therefore, monitoring of ink levels in the printing submodule **405** may be required. An ink level detector **507** (FIGS. **5** & **5**A) as would be known in the art is mounted on a cross bar **509** of the hard copy engine frame **501** adjacent the scanning carriage **313** sweep zone superposing the print media **309** printing zone **311**.

Printing Modules

FIG. **6** demonstrates an exemplary, scanning-type, printing submodule **405** adapted for use in a writing engine **401**. An outer shell consists of a pen top **601**, an ink container **603**, an ink manifold **605**, **607**, and a print head **611**. The print head **611** is connected with one end of a flex circuit **609** which in turn bears a nozzle plate **612** element of the print head in appropriate relationship to the ink manifold **605**, **607** and other print head sub-components as would be known in the art (ink drop generator elements and the like; not shown). The preferred embodiment of the present invention is for a thermal ink-jet print head type; however, piezoelectric, wave, and other print heads are also suited for use in accordance with the present invention. The distal end of the flex circuit **609** is adapted for coupling the printing submodule **405** to the electrical connector **445**, FIG. **4**. The flex circuit **609** can also carry a writing engine controller integrated circuit **613**. Datums **615**, **616**, **617**, **618**, **619**, **620** (and any others incorporated in a specific implementation that might be hidden in a perspective view) are provided as necessary for mating the printing submodule **405** in proper orientation to the carriage **313** as discussed with respect to FIGS. **3** and **5**. The embodiment shown is for a full, four color printing module; therefore, four sets of ink-jet orifice arrays **621** are employed. Other arrays may be used in accordance with the intent and purpose of use of any particular writing engine **401**. The printing submodule **405** would have inlet mechanisms for receiving each ink from a reservoir coupled thereto (see FIG. **4**), depending upon the printing characteristics of the particular writing engine design; e.g., one inlet port for an all-black ink cassette; four inlet ports and a multi-chambered container **603** for a CMYK full-color writing engine cassette, and the like.

The printing submodule **405** in a preferred embodiment is a semipermanent pen type, having mechanisms capable of controlling print head back-pressure and controlling ink flow from the off-axis reservoir(s) into the printing module. Other known manner semipermanent pen mechanisms can also be incorporated into the printing module. Such mechanisms are described in a variety of patents; e.g., U.S. Pat. Nos. 4,831,389 (Chan), 4,992,802 (Dion), 5,409,134 (Cowger), 5,325,119 (Fong) 5,448,818 (Scheffelin), and 5,650,811 (Seccombe), each assigned to the common assignee of the present invention and incorporated herein by reference. A further detailing of these mechanisms is not essential to an understanding of the present invention.

When a writing engine **401** is inserted into a hard copy engine **301** as shown in FIG. **5**A, as a fixed element of the printing submodule **405**, the print head **611** of the printing module is automatically put in proper alignment for printing operation when the printing module is mated to the carriage **313** (FIG. **3**) via the simple mechanical interface **335**. In the preferred embodiment, no other electrical or fluid connections need be made between the printing submodule **405** and the carriage **313**.

It is intended in a preferred embodiment that the printing submodule **405** be a low mass component having a predetermined supply of ink on-board limited to a volume necessary to ink out a predetermined area of print media, e.g., less than or equal to one page of largest size media compatible with the hard copy apparatus. In other terms, the volume of on-axis ink is substantially less than the volume of ink in a reservoir, e.g. 1/10th the reservoir volume, such that substantially all of the ink is carried off-axis within the writing engine. Small carriage subsystems benefit from two properties, low mass and small volume.

Smaller motors are required to drive the lower mass. Smaller power supplies and drive electronics are required to drive the smaller motors. A smaller mass will allow generally easier noise control. Smaller moving systems usually generate higher frequency noise; the sources of excitation, such as gear train and motor noise, are at higher frequencies. The natural frequencies of the moving systems are higher as the stiffness usually increases faster than the mass. The higher frequencies are easier to control; sound absorption materials are much more effective at higher frequencies. Moving low mass elements are less likely to excite the apparatus enclosure shells or panels, which generate low frequency noise (up to about 3500 Hz). The relatively large panels couple their vibration energy to the air much better than smaller components. Low frequencies are perceived as louder than higher frequencies.

A smaller print mechanism can be implemented without the stiffening required for larger masses. Moving the lower mass subsystem, viz., scanning back-and-forth across the printing zone, causes less printer shaking from reaction to carriage motions. Printer shaking can become substantial as some of the higher mass carriages move back and forth. Less printer shaking allows all the structural support in the printer to be smaller. Moving a smaller mass allows a reduction in the size of carriage supports. Stiffness requirements are reduced in carriage support and drive system components such as carriage drive belts. It is easier to keep resonant

frequencies high. Lower resonant frequencies have larger amplitude for a given acceleration level, leading to more velocity ripple. Velocity ripple leads to print defects, especially in color printing when colors no longer align correctly due to slight dot misplacement. Resonant frequencies of motion orthogonal to the carriage scan axis are also easier to keep high. Again the displacements result in print defects usually in the form of periodic color changes. Servo design is easier due to the higher resonant frequencies. A smaller mass allows higher speed. To effectively utilize higher carriage speed requires greater accelerations. The higher acceleration is required to keep the acceleration ramp lengths and times the same. Since in accord with Newton's laws, F=mA, a lower mass requires less force to accelerate. To obtain substantial benefits from 60-inches per second ("ips") carriage speeds in an 8-inch wide printer requires 3-g's acceleration compared to the current 1-g acceleration currently used to reach 20 ips.

Similarly, significant benefits are derived from having a relatively small volume of ink on-axis. Less over-travel is required to enable printing with all dots across the width of the print head. Products are smaller, both in height due to pen height and width due to less over-travel. With desk space tight in many commercial applications, smaller workspace footprint products are desired. Shipping costs are reduced due to more units fitting on a single bulk shipment pallet. Smaller products allow meeting the stiffness and strength requirements with smaller cross section structures. Stiffness is proportional to the inverse of the length cubed. If there is less distance between linear orifice arrays, the displacement from ideal position due to velocity ripple is less. This reduces the color misalignment for a given velocity ripple.

These benefits of a low mass printing module and associated carriage can be used either to reduce cost or increase performance. Smaller size for the same performance will give a lower cost system. Higher accelerations and less over-travel allow higher throughput if everything else in the system remains the same.

Note that an alternative embodiment can be designed in which the printing module is not actually extracted from the writing engine. By orienting the writing engine across the paper transport axis, the y-axis (see FIG. **14**), it is simple to envision an arrangement in which a carriage mechanism of the hard copy engine reaches into the writing engine to grasp a writing module mounted within the writing engine to traverse the printing zone without leaving the writing engine. Such an embodiment will be described hereinafter with respect to FIGS. **18** and **19**. Similarly, a page wide print head, once aligned to the hard copy engine, can print the entire printing zone without any motion of the writing instrument. In such alternative embodiments, there is still no fluidic interaction between the writing engine module and the hard copy engine except for the transfer of printing fluid from the writing engine directly onto the print medium.

Service Stations

The fundamentals of ink-jet service station technology are known in the art. U.S. Pat. No. 4,567,494 (Taylor), filed Jun. 29, 1984, is an early patent for *Nozzle Cleaning, Priming and Capping Apparatus for Thermal Ink Jet Printers,* assigned to the common assignee of the present invention and is incorporated herein by reference. Start-up and service procedures are also known in the art.

A service station can provide a number of useful functions, including:

1. clearing clogged nozzles and removing bubbles from a pen;

2. covering nozzles when a print head is not in use to prevent contamination thereof;

3. preventing ink from drying out in the nozzles when a print head is not in use;

4. wiping off nozzle contaminants picked up during printing; and

5. providing a location for firing nozzles into for clearing out deprimed nozzles.

U.S. Pat. No. 5,455,608 (Stewart et al.) for a *Pen Start Up Algorithm for Black and Color Thermal Ink-Jet Pens* is exemplary of such service station operating procedures (assigned to the common assignee of the present invention and incorporated herein by reference).

A plurality of service station designs and operations are known in the art. More than one, or a combination design is compatible with the present invention.

In a first example, the HP DeskJet 850C printer employs a rotary type service station which orthogonally wipes the linear orifice arrays of the print head nozzle plates of print cartridges used with this model. Rotary type service stations are shown in U.S. Pat. No. 5,115,250 (Harmon et al., filed Jan. 12, 1990) for a *Wiper for Ink-Jet Printhead;* U.S. Pat. No. 5,103,244 (Gast et al., filed Jul. 5, 1990) for a *Method and Apparatus for Cleaning Ink-Jet Printheads;* U.S. Pat. No. 5,146,243 (English et al., filed Jul. 29, 1991) for a *Diaphragm Cap System for Ink-Jet Printers;* U.S. Pat. No. 5,614,930 (Osborne et al., file Oct. 28, 1994) for a *Orthogonal Rotary Wiping System for Inkjet* [*sic*] *Printheads* (each of which is assigned to the common assignee of the present invention and incorporated herein by reference).

In another example, "elevator" service stations are also known in the art as shown in U.S. Pat. No. 5,396,277 (Gast et al., filed Sep. 25, 1992) for a *Synchronized Carriage and Wiper Motion Method and Apparatus for Ink-Jet Printers;* U.S. Pat. No. 5,455,609 (Gast et al., filed Sep. 30, 1992) for a *Printhead Servicing Station for Printers;* U.S. Pat. No. 5,440,331 (Grange, filed Dec. 21, 1992) for a *Printhead Servicing Apparatus* (each assigned to the common assignee of the present invention and incorporated herein by reference).

A translationally moving sled that also rises into an elevated capping position is shown in U.S. Pat. No. 4,853,717 (Harmon et al., filed Oct. 23, 1987) for a *Service Station for Ink-Jet Printer* (assigned to the common assignee of the present invention and incorporated herein by reference).

As will be recognized by a person skilled in the art, employing one or more of these service station techniques is applicable to the present invention. The commonality of use is that it is preferable to have the service station within the writing engine, although a service station activator can be part of the hard copy engine.

For example, a main problem with replaceable ink cartridges in the state-of-the-art is that when not in use, an ink-jet print head must be capped to prevent problems such as drooling and crusting of ink that would render the pen inoperative. [Capping also is known in the art; for examples, see U.S. Pat. No. 5,027,134 (Harmon et al., filed Sep. 1, 1989) for a *Non-Clogging Cap and Service Station for Ink-Jet Printheads;* U.S. Pat. No. 5,448,270 (Osborne, filed Nov. 16, 1994) for an *Ink-Jet Printhead Cap Having Suspended Lip* (both assigned to the common assignee of the present invention and incorporated herein by reference).] In some low cost home printers, pens are regularly swapped; black for text printing, color for graphics. Separate storage and capping devices must be provided with such pens. Moreover, it has been found that different ink chemical formulations require caps formed of materials that are compatible. The present invention solves these problems because the writing engine includes the servicing elements.

The print head is fully capped when not in use whether the writing engine itself is installed or stored outside the printer. This allows an engine to be swapped with one having different printing characteristics. For example, an office may have a "text writing engine" containing only a large volume, black ink reservoir which gets extensive daily use and a "color graphics writing engine" containing cyan, magenta, yellow and black ink reservoirs which only sees occasional use.

Similarly, print head wipers are subject to wear and tear. Exemplary wipers are taught by the assignee of the present invention in U.S. Pat. No. 5,151,715 (Ward et al., filed Jul. 30, 1991) for a *Printhead Wiper for Ink-Jet Printers* (assigned to the common assignee of the present invention and incorporated herein by reference). Having the wipers replaced whenever a writing engine is replaced substantially eliminates the need for any maintenance.

During operation, partial occlusions or clogs in the print head nozzles and orifices are periodically cleared by firing a number of drops of ink through each of the nozzles in a clearing or purging process known as "spitting." The waste ink is collected at a spitting reservoir portion of the service station, known as a "spittoon." In prior art spittoons, most of the spit ink landed in the bottom of the spittoon. Some of the ink, however, ran down the walls of the spittoon tube or "chimney" under the force of gravity and into a reservoir, where many solvents evaporated. Sometimes the waste ink solidified before reaching the reservoir, forming stalagmites/stalactites from ink deposits along the sides of the chimney. These ink stalagmites/stalactites often grew and clogged the entrance to the spittoon. To avoid this phenomenon, conventional spittoons must be wide, often over 8 mm in width, to handle a high solid-content ink. Since the conventional spittoons were located between the print zone and the other servicing components, this extra width increased the overall printer width, resulting in additional cost being added to the printer, in material, and shipping costs. Moreover, this greater printer width increased the overall printer size, yielding a larger footprint, that is, a larger working space required to receive the printer, which was undesirable to many consumers.

As mentioned above, conventional spittoons were located between the print zone and the other servicing components, and to minimize the impact on printer width, the conventional spittoons were only wide enough to receive ink from one print head at a time. Thus, the conventional spitting routine of a multi-pen unit first positioned one print head over the spittoon for spitting, then the pen carriage moved the next pen over the spittoon for spitting. Unfortunately, all this carriage motion not only slows the spitting routine, but it is also noisy.

Besides increasing the solid content, mutually precipitating inks have been developed to enhance color contrasts. For example, one type of color ink causes black ink to precipitate out of solution. This precipitation rapidly fixes the black solids to the page, which prevents bleeding of the black solids into the color regions of the printed image. Unfortunately, if the mutually precipitating color and black inks are mixed together in a conventional spittoon, they do not flow toward a drain or absorbent material. Instead, once mixed, the black and color inks rapidly coagulate into a gel with some residual liquid.

Thus, the mixed black and color inks not only may exhibit a rapid solid build-up, but the liquid fraction may also tend to run and wick (flowing through capillary action) into undesirable locations. To resolve the mixing problem, some printers used two conventional stationary spittoons, one for the black ink and one for the color inks. Unfortunately, each of these dual spittoons must be wide enough to avoid clogging from stalagmites/stalactites growing inwardly from the side walls of the spittoon chimney. Such a dual-spittoon design, with the spittoons located between the printhead and other servicing components, further increased the overall width and footprint of the printer. Furthermore, besides growing from the sides of the spittoon, the ink stalagmites/stalactites sometimes grew upwardly from the bottom of the spittoon. To prevent these stalagmites/stalactites from interfering with the printhead over time, the use of very deep spittoons was typically required, which could also increase the overall printer size.

Again, many of the problems associated with spitting and spittoons are solved by having spittoons that are discarded with the writing engine.

Details of a type of translational motion service station such as shown herein in FIGS. **4**, **5**, **13** and **14** and that may be employed in accordance with the present invention is described in U.S. patent application Ser. No. 08/862,952, filed May 30, 1997, for a *Translational Service Station for Imaging Inkjet Printheads,* assigned to the common assignee of the present invention, incorporated herein by reference in its entirety, and repeated herein in pertinent part with a drawing therefrom labeled FIG. **16** herein.

FIG. **16** schematically shows the operation of a basic translational service station **60** constructed in accordance with the present invention that may be located as shown in FIGS. **4**, **5**, **13** and **14** generally designated as service station module **407**. The service station **60** has a translating platform or pallet **62**, which may be driven linearly using a variety of different propulsion devices, such as a rack gear **64** formed along the underside of the pallet and driven by a pinion gear **65**. The pinion gear **65** may be driven by a conventional motor and gear assembly (not shown) for translational motion as indicated by double headed arrow **66**. In the current implementation, pinion gear **65** and associated drive motor and gear assembly becomes an element of the hard copy engine **301**, FIGS. **3**, **5**, **5A**, **13**, **14**, and **15**. The pallet **62** carries various servicing components, such as a pair of conventional wipers **68** and a pair of caps **69**, each of which may be constructed from any conventional material known to those skilled in the art, but preferably, they are of a resilient, non-abrasive, elastomeric material, such as nitrile rubber, or more preferably, ethylene polypropylene diene monomer (EPDM).

The pallet **62** may also carry an absorbent or a non-absorbent purging or spitting station portion **70**, which receives ink that is purged or "spit" from the ink-jet print heads **54**, **56** attached to writing module's ink manifold and ink drop generator sections **50**, **52**. Located along a recessed spit platform portion **72** of the pallet **62**, the preferred embodiment of spit station **70** includes an absorbent spit target, such as a spit pad **74**, which is preferably made of a porous absorbent material. Preferably, the pad **74** is a wettable polyethylene compact material, particularly a porous compact material having surface and chemical treatments of the polymer so that it is wettable by the ink. One suitable pad material is commercially available under the trade name Poron, manufactured by the Porex Company of Atlanta, Ga. Alternatively, the spit pad **74** may be of a polyolefin material, such as a polyurethane or polyethylene sintered plastic, which is a porous material, also manufactured by the Porex company. In a preferred embodiment, the absorption of the pad **74** is enhanced by prewetting the pad to better transport the ink vehicle or solvents through the pad pores. The pad **74** may be prewetted either before, during, or

after assembly of pallet **62**, using for example, a Polyethylene Glycol ("PEG") compound; however prewetting before assembly is preferred. Another suitable porous pad **74** may be of a sintered nylon material.

The spit pad **74** has an exterior surface serving as a target face **75**. Preferably, the pad face **75** is located in close proximity to the print heads **54** and **56** during spitting, for instance on the order of (0.5 to 1.0 millimeters). This close proximity is particularly well-suited for reducing the amount of airborne ink aerosol. The spit platform **72** is substantially flat, although a contour for drainage or for air circulation to assist evaporation may be useful. The illustrated spit pad **74** is of a substantially uniform thickness, so the target face **75** is also substantially flat or planar in contour, although other surface contours may be useful, such as a series of grooves or other patterns to increase the target surface area for absorption.

To remove any surface accumulation of ink residue or other debris from the target face **75**, the service station **60** may also include a spit pad scraper device **76**. The illustrated scraper **76** has a support device **78** that mounts a blade member **80**. To engage the target surface **75** with the scraper blade **80**, the pallet **62** moves in the direction of arrow **66** so the scraper can clean target face **75**. This spit debris is pushed by the scraper blade **80** into a drain or dump hole **82** formed through the pallet **62**, which the debris falls through for collection in a bin **84** or other receptacle. So the target scraper **76** does not interfere with the print head wipers **68**, the wipers **68** have been positioned inboard from the spit pad **74**.

A preferred material for the scraper blade **80**, is a resilient, non-abrasive, elastomeric material, such as nitrile rubber, or more preferably, ethylene polypropylene diene monomer (EPDM), or other comparable materials known in the art. Another preferable elastomeric material for the scraper blade **80** is a polypropylene polyethylene blend (in a ratio of approximately 90:10), such as that sold under the trade name, "Ferro 4," by the Ferro Corporation, Filled and Reinforced Plastics Division, 5001 O'Hara Drive, Evansville, Ind. 47711. This Ferro 4 elastomer is a fairly hard material, that is not as elastic as typical EPDM wiper blades. The Ferro 4 elastomer has very good wear properties, and good chemical compatibility with a variety of different ink compositions. For example, suitable durometers (Shore scale A) for the scraper blade **80** may range from 35 to 100. In some implementations, hard scrapers, such as of a plastic like nylon, for example, may be suitable for cleaning the target pad **75**. Indeed, a scraper formed of steel wire is not only inexpensive, but also allows encrusted ink to be easily broken away from the scraper.

To bring the wipers **68** and caps **69** into engagement with the print heads **54** and **56**, the pallet **62** is moved in the direction of arrow **66**, with the capped position being shown in FIG. **16**. The pair of caps **69** are mounted to the pallet **62** using a print head or carriage engaging cap elevation mechanism that includes a spring-biased sled **85**. The sled **85** is coupled to pallet **62** by two pair of links **86** and **88**, for a total of four links, each to the pallet **62** and the sled **85**. Of the four links, only the two are visible in FIG. **16**, with the remaining two links being obscured from view by the two links which are shown. The sled **85** may be biased into the lowered position, shown in dashed lines in FIG. **16**, by a biasing member, such as a spring element **90**.

When the carriage **313**, FIG. **3**, has positioned the printing submodule **405**, FIG. **6** and FIG. **13**, in the writing engine **401**, proximately to the service station **60**, the pinion gear **65** drives the pallet **62** via the rack gear **64** until arms **92**, extending upwardly from sled **85**, engage either the body of printing submodule **405**, or the carriage **313**. The pinion gear **65** continues to drive the pallet **62** toward the right as shown in FIG. **16**, which causes the sled **82** to rise upwardly from the pallet, extending the spring **90**, until the caps **69** engage the respective print heads **54**, **56**. While the pairs of links **86**, **88** are shown in an upright position to cap in FIG. **16**, it is apparent that an angled orientation with respect to the pallet **62** may also be useful in some implementations, for example to accommodate slight elevational variations in the printheads **54**, **56**.

Thus, the pinion gear **65** may drive the pallet **62**, via the rack gear **64**, back and forth in the direction of arrow **66** to position the pallet **62** at various locations to service the printheads **54**, **56**. To wipe the print heads **54**, **56**, the platform preferably is reciprocated back and forth as indicated by arrow **66**. To spit through the nozzles to clear any blockages, or to monitor temperature rises and the like, the platform is moved into a nozzle clearing position where the spit target **75** is under the printheads. The capping motion of the platform is described above. To remove any ink residue from the surface of the spit target **75**, the pallet **62** is moved until the target **75** is scraped by blade **80** and into a bin **84**. If necessary, the pallet **62** maybe reciprocated back and forth to scrape the target **75**.

Further details regarding this particular service station may be obtained by reference to U.S. patent application Ser. No. 08/862,952, however, further detail is not essential to an understanding of the present invention.

Details regarding still another type of translational motion service station, such as shown herein in FIGS. **4**, **5**, **13** and **14** as useful in accordance with the present invention is described in U.S. patent applications Ser. No. 08/667,611, filed on Jul. 3, 1996, for an *Integrated Translational Service Station for Inkjet Printheads* (assigned to the common assignee of the present invention and incorporated herein by reference).

While the service station is preferably within the writing engine module, it can be in the hard copy engine and delivered into a writing engine module upon insertion into the hard copy engine. However, this obviates many of the advantages of having a disposable, or refurbishable, service station component manufactured into the writing engine module. The most egregious problem created is that a module removed without capping the print head would likely cause printing failure upon any attempt to reuse the module at a later date.

At a minimum, the writing module should include a print head capping device. Turning to FIG. **17**, a writing engine **401** having a service station sled **1701** having only a print head cap **1703** is mounted thereon (compare FIG. **4**) A cap locator **1705** ascends upwardly from the sled **1701** to contact a face of the printing submodule **405** in order to locate the cap **1703** relative to the print head.

Operation

The fundamental repartitioning of an ink-jet hard copy apparatus in accordance with the present invention is depicted in block diagram form by FIGS. **7** and **10**, and compared with the prior art in FIGS. **8**, **9**, **11**, and **12**.

FIG. **7** depicts the fluidic construct of a consumable writing engine **401** in accordance with the present invention. In comparison, a typical commercial print cartridge, such as the Hewlett-Packard™ 51626 cartridge used in HP™ DeskJet™, OfficeJet™ and other popular hard copy machines is depicted by FIG. **8** (PRIOR ART); note that a service station **407** for such a commercial print cartridge is required to be an integral part of the hard copy apparatus and

have a concomitant life expectancy and accompanying capability. A replaceable ink-jet cartridge product, such as shown in FIG. **1**, using a semipermanent pen as in FIG. **2**, is depicted in FIG. **9** (PRIOR ART); two consumables are requisite to such systems and the service station **407** must be permanent as in the system of FIG. **8**. Thus, comparison with FIG. **7** shows distinct consumables partitioning differences which also indicate accomplishment of goals and advantages in accordance with the present invention as enumerated in the Summary of the Invention section above.

A similar set of FIGURES depict the differences in electronic system partitioning, FIGS. **10–12**. FIG. **10** depicts partitioning in accordance with the present invention. FIG. **11** (PRIOR ART) depicts partitioning as is common to a commercial product, e.g., the HP DeskJet 850C printer which uses print cartridges as discussed above. FIG. **12** depicts an off-axis system such as would be implemented in a printer using the semipermanent pen **210** of FIG. **2**. It is known in the art to provide control algorithms for writing instrument servicing, refilling, and printing (e.g., print modes and color maps). Having wet systems control within the writing engine module, provides the advantage of allowing upgraded control with other writing system changes.

In other words, the electronics is partitioned in accordance with the present invention such that the designer of the hard copy apparatus needs minimal knowledge of ink-jet requirements. In the preferred implementation, to print, the hard copy apparatus would merely address the writing engine specifying a given color on a certain dot grid or pixel. The writing engine would automatically adjust for different ink formulations, ink color maps, and drop volumes. Moreover, the writing engine would contain enough knowledge to have complete control over all servicing and ink refill algorithms. A new writing engine, adhering to the same protocol could be added later in the product's lifetime. A new writing engine would thus allow design freedom not currently present in non-modular systems with regard to inks, drop sizes, dot matrix ink drop manipulation, and service station algorithms.

This partitioning puts intelligence in the writing engine module. There are three levels of implementation. The most basic level would be to have the lowest level information about the writing engine contained in the writing engine module. Pulse timing, drop firing order, and related information would be contained in the writing engine. The hard copy apparatus would think of the pen as a column of x-picoliter drops. This relieves the hard copy apparatus designer of needing knowledge of the lowest level of ink-jet pen requirements. For minor enhancements, these are the parameters most likely to change, and these could be changed and the new writing engines would still be backward compatible with the hard copy apparatus in the field.

The next level is to enable addressing of the writing engine independent of drop volume and ink color maps. The hard copy apparatus would address the writing engine requiring specific calibrated colors on a specified grid. The writing engine would contain the information for translation. New inks with different color maps could be added, and the modified color maps in the writing engine would compensate automatically with no change to the hard copy apparatus. The writing engine would adjust for drop volume and target grid changes. A writing engine based on a 10-pl pen would take the 300 dpi, 30-pl drop data and automatically translate it to 10-pl drop data, firing three drops for every 30-pl drop request.

At the highest level, the writing engine would have control over all its needs. This includes control of servicing algorithms and ink valves. This could be implemented similar to a JAVA™ applet, which would be uploaded from the writing engine to the hard copy apparatus to control these algorithms, or with a more targeted protocol. For a servicing algorithm, the writing engine would instruct the carriage to move to a certain position, and then automatically fire certain drops. For ink delivery control, there could be inputs from certain sensors detecting ink level and outputs to valves controlling the ink flow. The control algorithm would be run from the writing engine, and could be easily upgraded with a new writing engine.

Again, a comparison of FIGS. **11** and **12** with FIG. **10** shows distinct consumables partitioning differences that indicate accomplishment of the goals and advantages in accordance with the present invention as enumerated in the Summary of the Invention section above. The writing engine controller can thus be an integrated circuit which controls ink droplet sequencing, firing, pulse timing, firing energy control, temperature control, drop volume scaling, dot position correction, color conversion algorithms, color maps, print mode algorithms, interface protocols, and the like as may be current in the state of the art for ink-jet print head operations, and also writing instrument servicing and refilling algorithms.

FIGS. **13** and **14** show a combined hard copy engine and writing engine forming a hard copy apparatus. In the main, when not printing, as depicted in FIGS. **5** and **13**, the inserted printing submodule **405** is capped by the service station **407** (see also, FIG. **4**). Pressure is being applied to ink reservoir pressure plate **441** via biased pressure applicator **341** such that a positive pressure is exerted on each of the ink reservoirs **411–417**. A sheet of print media **309** is transported by the stepper motor **305** and associated transmission **307** coupled to the paper drive roller **312** to have a printing zone **311** subjacent the print head (hidden) of the printing submodule **405** now coupled to the scanning carriage **313** and set to be driven transversely back-and-forth across the print zone **311** by motor **323**.

FIG. **14** shows the system while a printing operation is under way. The service station **407** has been translated out of the way (compare position with FIG. **13**), uncapping the print head, and wiping the nozzle plate. Any spitting algorithms to clear and prime print head orifices have been carried out. The carriage **313**, driven by reversing motor **323** under control of the "Printer Control," FIG. **10**, traverses ("x-axis" as indicated by arrows) the printing zone **311** of the print medium **309**. The swing arm **451**, carrying the ink tubes **421–427**, and flex circuit **609** (not shown, but see FIG. **15**), being pivotally coupled to the printing submodule **405**, follows the movement of the carriage **313**. During traversing, image processing data (see FIG. **10**, "Image Processing") transferred into the writing engine integrated circuit **613** (FIGS. **6** & **10**) is used in a known manner or proprietary algorithm manner of dot matrix printing to fire ink droplets from the print head **611** (also FIG. **6**) orifices **621** onto the print medium **309**. After completing a swath scan in accordance with an employed print mode algorithm (e.g., 1-pass, 2-pass, et seq.), the print medium **309** is stepped ("y-axis" as indicated by the labeled arrow) to position the next swath print zone **311** beneath the print head **611**. Whether the leading edge of print media comes in from the front, back, top, or bottom of the hard copy engine printing station is a matter of design choice.

When the ink detector **507** sends a signal that the printing submodule **405** is low on ink, the carriage **313** returns the printing module back into the writing engine and a refill cycle is implemented. Once completed, printing resumes.

Note carefully, that on-the-fly refilling algorithms are also employed in accordance with the present invention. For an example, refer to U.S. Pat. No. 5,650,811, issued on Jul. 22, 1997, to Seccombe et al. for an *Apparatus for Providing Ink to a Printhead* [sic](assigned to the common assignee of the present invention and incorporated herein by reference). It is contemplated generally that the writing instrument can be refilled on demand, whether docked within the writing engine or continuously during a printing operation. A variety of implementations are known in the art or can be developed as a proprietary construct.

Alternative Embodiments

FIGS. **18** and **19** depict an alternate embodiment of a writing engine **1801**. A housing **1803** is configured to be received in a complementary hard copy engine (not shown) such that the writing engine module lies across the print zone (see FIG. **3**, **311**). Four integral ink reservoirs **1805**, **1807**, **1809**, **1811** are individually mounted into the housing **1803**. In the preferred embodiment, the reservoirs **1805–1811** are self-pressurizing. Note that this not only makes manufacturing simpler, it also makes the writing engine **1801** refurbishable or reconfigurable by making reservoirs that can be replaced at will. However, it should be recognized that providing the end-user with individual replacement reservoirs will obviate certain advantages of a unitary writing engine module and could lead to serious equipment failures if incompatible inks are mixed.

At one end of the writing engine **1801**, an ink-jet print head **1813** (FIG. **19** only) is located such that when the writing engine is installed in the compatible hard copy engine it is positioned approximately superjacent one end of the print zone. A cam latching and unlatching device **1815** is provided for releasing the print head **1813**, a service station **1817**, and electrical connector **1819** for interlocking with complementary hard copy engine activation mechanisms in a similar manner to the prior embodiment (see e.g., elements **313**, FIG. **3**, and FIG. **16**). An ink manifold **1821** incorporating appropriate fluid couplings to the print head **1813** via ink tubes **1823** (FIG. **19** only) is mounted in the housing **1803** such that insertion of an individual ink reservoir **1805–1811** releases ink from within each reservoir into the manifold **1821**, e.g., a snap-fit that breaks a seal of the reservoir. As with the prior embodiment, a traveling flex circuit **1825** is mounted to be able to follow the print head **1813** as it traverses a print medium.

Inks

"Ink" is used generically herein for any ink, dye (e.g., fabric dyes for garment printing), colorant, toner, hot-melt composition, printing fluid, or the like, which is compatible with ink-jet technology. A distinct advantage of the present invention is the ability to provide the end-user with a variety of easily interchangeable writing engines, each having distinct printing characteristics. For example, for heavy duty alphanumeric text printing, a single, large volume, black ink writing engine cassette can be installed; for printing photographic quality prints, a set of different color ink reservoirs—e.g., cyan light, cyan dark, magenta light, magenta dark, yellow, and black—in a single writing engine cassette is installed.

Again, while having the writing engine configured as a one-time use construct is preferred, kits can be supplied for replacing or refilling the reservoirs.

The present invention provides a reconfigured ink-jet system and subsystem components thereof that is useful in the printing field and which provides unique methodologies of manufacturing, fabricating, constructing, assembling, using, operating, refurbishing, rejuvenating, restoring, and providing components for an ink-jet hard copy apparatus. The foregoing description of embodiments of the present invention has been presented for purposes of illustration and description. It is not intended to be exhaustive or to limit the invention to the precise form or to exemplary embodiments disclosed. Obviously, many modifications and variations will be apparent to practitioners skilled in this art. Similarly, any process steps described might be interchangeable with other steps in order to achieve the same result. The embodiment was chosen and described in order to best explain the principles of the invention and its best mode practical application, thereby to enable others skilled in the art to understand the invention for various embodiments and with various modifications as are suited to the particular use or implementation contemplated. It is intended that the scope of the invention be defined by the claims appended hereto and their equivalents.

What is claimed is:

1. A hard copy apparatus comprising:

writing engine means for inking print media, said writing engine means including ink-jet printing means for transferring ink from said writing engine means to said print media, servicing means for maintaining ink-jet functional integrity of the ink-jet printing means, at least one predetermined ink, at least one ink containing means for containing a predetermined quantity of said at least one predetermined ink, delivering means for delivering said ink from said containing means to said ink-jet printing means, electrical means for connecting power and control signals to said writing engine means, and housing means for housing said ink-jet printing means, servicing means, ink, ink containing means, delivering means, and electrical means in a respective operational configuration as a selectively replaceable unit within the hard copy apparatus; and

hard copy engine means for delivering said print media to and from a printing zone location therein and for locating a writing engine relative to said printing zone location.

2. The hard copy apparatus as set forth in claim **1**, the servicing means further comprising:

means for capping the ink-jet printing means when the writing engine is not inking said print media.

3. The hard copy apparatus as set forth in claim **1**, the servicing means further comprising:

means for wiping said ink-jet printing means.

4. The hard copy apparatus as set forth in claim **1**, the servicing means further comprising:

means for receiving said ink when fired from said ink-jet printing means into said servicing means.

5. The hard copy apparatus as set forth in claim **1**, said writing engine means further comprising:

controlling means for controlling electronic and electromechanical functions of writing engine components.

6. The hard copy apparatus as set forth in claim **1**, the ink-jet printing means further comprising:

a low mass printhead component wherein said ink on-board the low mass printhead component is limited to a predetermined supply volume wherein a ratio of ink in the low mass printhead component to ink contained in said writing engine means outside of said low mass printhead component is less than 1-to-10.

7. The hard copy apparatus as set forth in claim **1**, further comprising:

mating means for releasably mating said writing engine means to said hard copy engine means.

8. The hard copy apparatus as set forth in claim **1**, further comprising:

means for delivering said electrical power and data to said electrical means.

9. A writing engine for use with a hard copy apparatus adapted for selectively receiving a writing engine therein, comprising:

ink-jet printing means for transferring ink to print media;

at least one predetermined ink;

at least one ink containing means for containing a predetermined quantity of said at least one predetermined ink;

coupling said ink containing means and the ink-jet printing means, delivering means for delivering said ink from said containing means to said ink-jet printing means;

servicing means for servicing the ink-jet printing means;

electrical means for connecting power and logic signals to said writing engine including to said ink-jet printing means and said servicing means;

housing means for housing said printing means, ink, ink containing means, delivering means, electrical means, and servicing means in a unified mounting containment providing a replaceable modular unit; and

said housing means and said ink-jet printing means having means for selectively interfacing with the hard copy apparatus when received therein such that said ink-jet printing means is positioned for printing ink onto the print media.

10. The writing engine as set forth in claim **9**, further comprising:

said printing means is mounted in said writing engine such that it is selectively extracted from said housing means for printing cycles and selectively re-inserted into said housing means during non-printing cycles.

11. The writing engine as set forth in claim **9**, the servicing means further comprising:

means for capping said printing means.

12. The writing engine as set forth in claim **9**, the servicing means further comprising:

means for wiping said printing means.

13. The writing engine as set forth in claim **9**, the servicing means further comprising:

means for receiving ink fired from said printing means.

14. The writing engine as set forth in claim **9**, further comprising:

controlling means for controlling electronic and electromechanical signals to and from said writing engine.

15. The writing engine as set forth in claim **14**, the controlling means further comprising:

circuit means for connecting said printing means to said hard copy engine and integrated circuit means for processing printing means operational controls.

16. The writing engine as set forth in claim **9**, the ink-jet printing means further comprising:

a low mass printhead component having a predetermined supply of ink on-board said component, wherein the predetermined volume is limited to a volume necessary to ink out a predetermined area of said print media less than or equal to one page of largest size media compatible with said hard copy apparatus.

17. The writing engine as set forth in claim **9**, further comprising:

each ink containing means for containing a predetermined quantity of said at least one predetermined ink is an individually replaceable ink reservoir.

18. The writing engine as set forth in claim **9**, further comprising:

each ink containing means for containing a predetermined quantity of said at least one predetermined ink is an individually refillable ink reservoir.

19. The writing engine as set forth in claim **9**, the delivering means for delivering said ink from said containing means to said printing means further comprising:

means for delivering said ink to said printing means on demand.

* * * * *