US007278703B2

(12) **United States Patent**
Benjamin et al.

(10) **Patent No.: US 7,278,703 B2**
(45) **Date of Patent: Oct. 9, 2007**

(54) **FLUID EJECTION DEVICE WITH IDENTIFICATION CELLS**

(75) Inventors: **Trudy L. Benjamin**, Portland, OR (US); **Joseph M Torgerson**, Philomath, OR (US); **William S Eaton**, Vancouver, WA (US)

(73) Assignee: **Hewlett-Packard Development Company, L.P.**, Houston, TX (US)

(*) Notice: Subject to any disclaimer, the term of this patent is extended or adjusted under 35 U.S.C. 154(b) by 361 days.

(21) Appl. No.: **10/827,135**

(22) Filed: **Apr. 19, 2004**

(65) **Prior Publication Data**

US 2005/0231545 A1 Oct. 20, 2005

(51) **Int. Cl.**
B41J 2/01 (2006.01)

(52) **U.S. Cl.** **347/19**

(58) **Field of Classification Search** 347/19
See application file for complete search history.

(56) **References Cited**

U.S. PATENT DOCUMENTS

5,431,673	A *	7/1995	Summers et al.	606/170
5,886,726	A *	3/1999	Pawelka et al.	347/197
6,039,428	A	3/2000	Juve et al.	
6,081,280	A *	6/2000	Bolash et al.	347/9
6,174,037	B1	1/2001	Donahue et al.	
6,385,407	B1 *	5/2002	Inose	399/24
6,450,601	B1	9/2002	Pagnon et al.	
2002/0057305	A1 *	5/2002	Kao et al.	347/14
2002/0060722	A1 *	5/2002	Axtell et al.	347/57
2002/0140751	A1	10/2002	Imanaka et al.	
2002/0145645	A1 *	10/2002	Aono et al.	347/48
2002/0175965	A1 *	11/2002	Skene et al.	347/19
2003/0002899	A1	1/2003	Furukawa et al.	
2003/0030687	A1	2/2003	Hu et al.	
2003/0146951	A1	8/2003	Skene et al.	
2003/0146967	A1 *	8/2003	Miller	347/191

FOREIGN PATENT DOCUMENTS

EP	0571093		6/1998
EP	0980758	A3	8/1999
EP	1128324	A2 *	8/2001
WO	WO89/03768		5/1989

* cited by examiner

Primary Examiner—Huan Tran

(57) **ABSTRACT**

A fluid ejection device comprising an identification line adapted to receive a program signal and a read signal and identification cells electrically coupled to the identification line. Each of the identification cells comprises a memory circuit and a memory element. The memory circuit is adapted to receive and respond to signals in order to selectively store a value in the memory circuit, which determines whether the identification cell is responsive to signals received on the identification line.

53 Claims, 9 Drawing Sheets

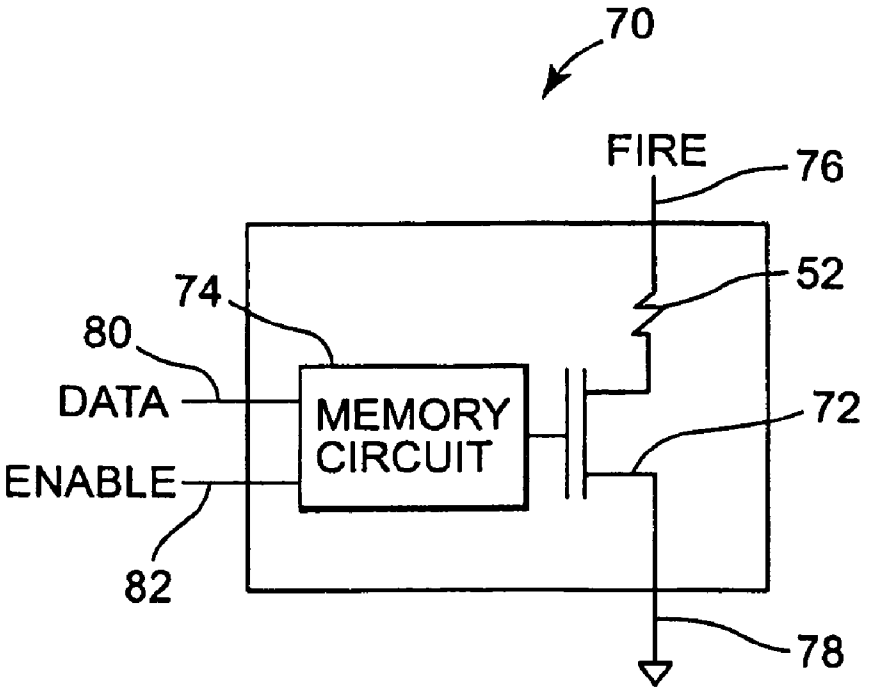

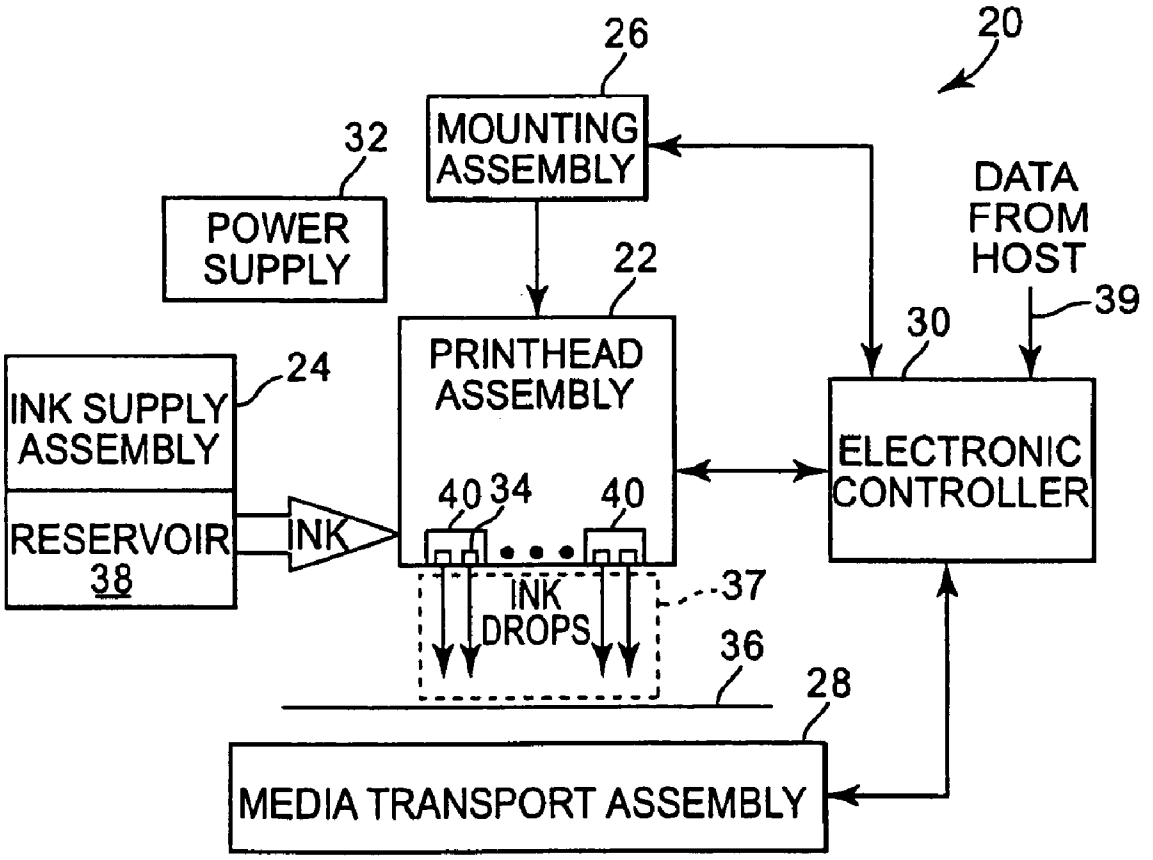
20
26
MOUNTING ASSEMBLY
32
POWER SUPPLY
22
PRINTHEAD ASSEMBLY
DATA FROM HOST
39
30
ELECTRONIC CONTROLLER
24
INK SUPPLY ASSEMBLY
RESERVOIR 38
INK
40
34
40
INK DROPS
37
36
28
MEDIA TRANSPORT ASSEMBLY

Fig. 1

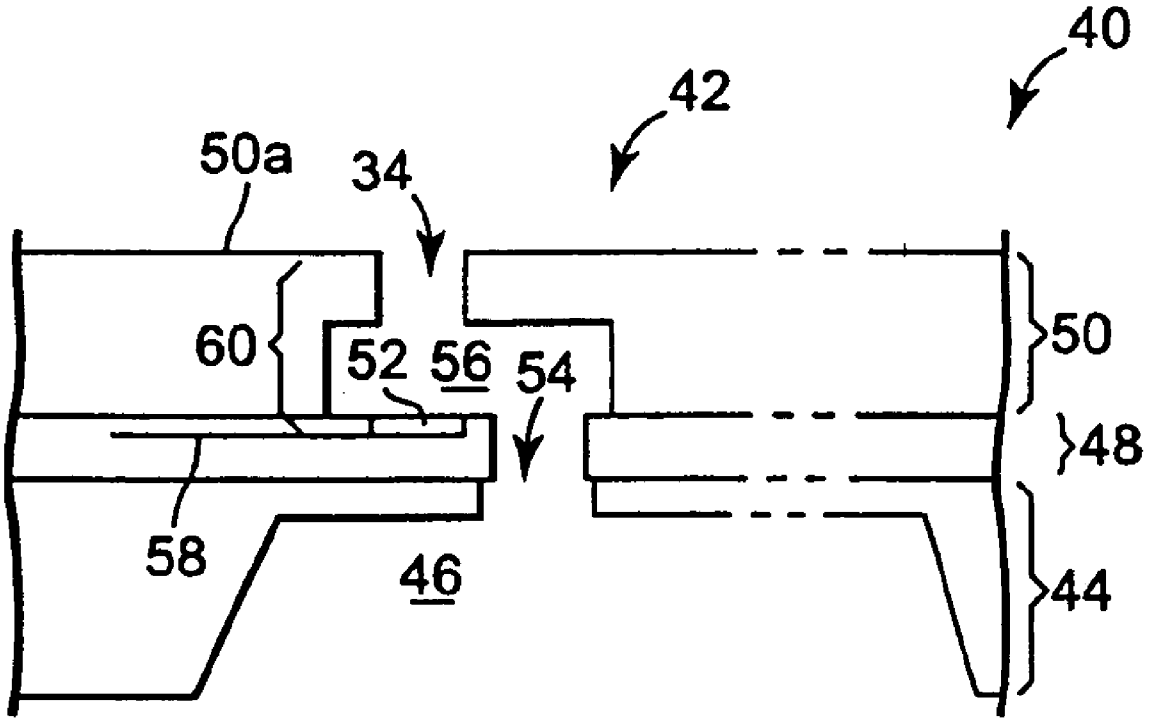

Fig. 2

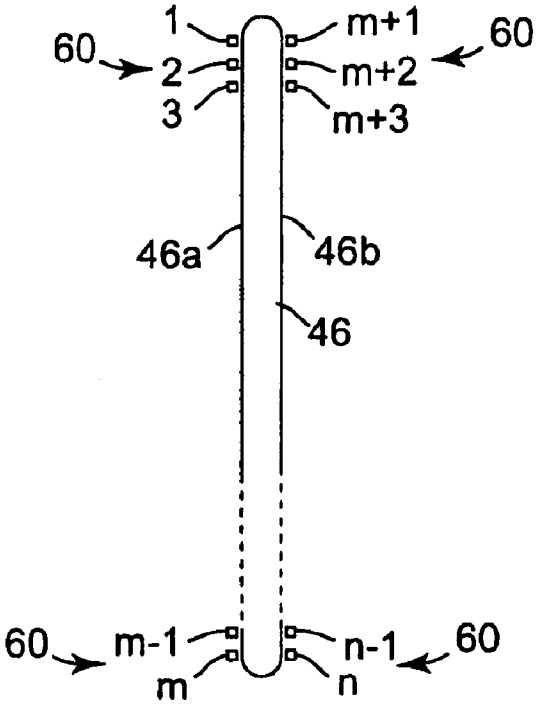
1
m+1
60
60
2
m+2
3
m+3
46a
46b
46
60
m-1
n-1
60
m
n

Fig. 3

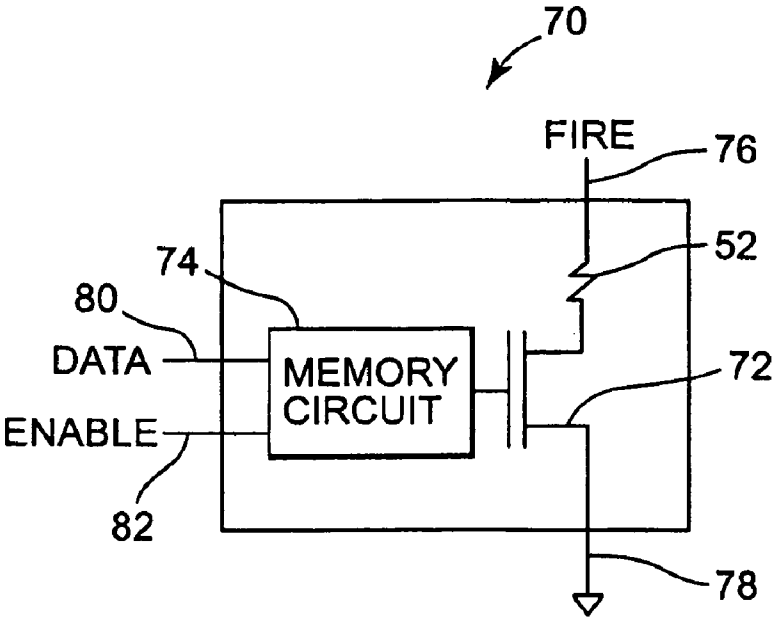
70
FIRE
76
52
74
80
DATA
MEMORY CIRCUIT
72
ENABLE
82
78

Fig. 4

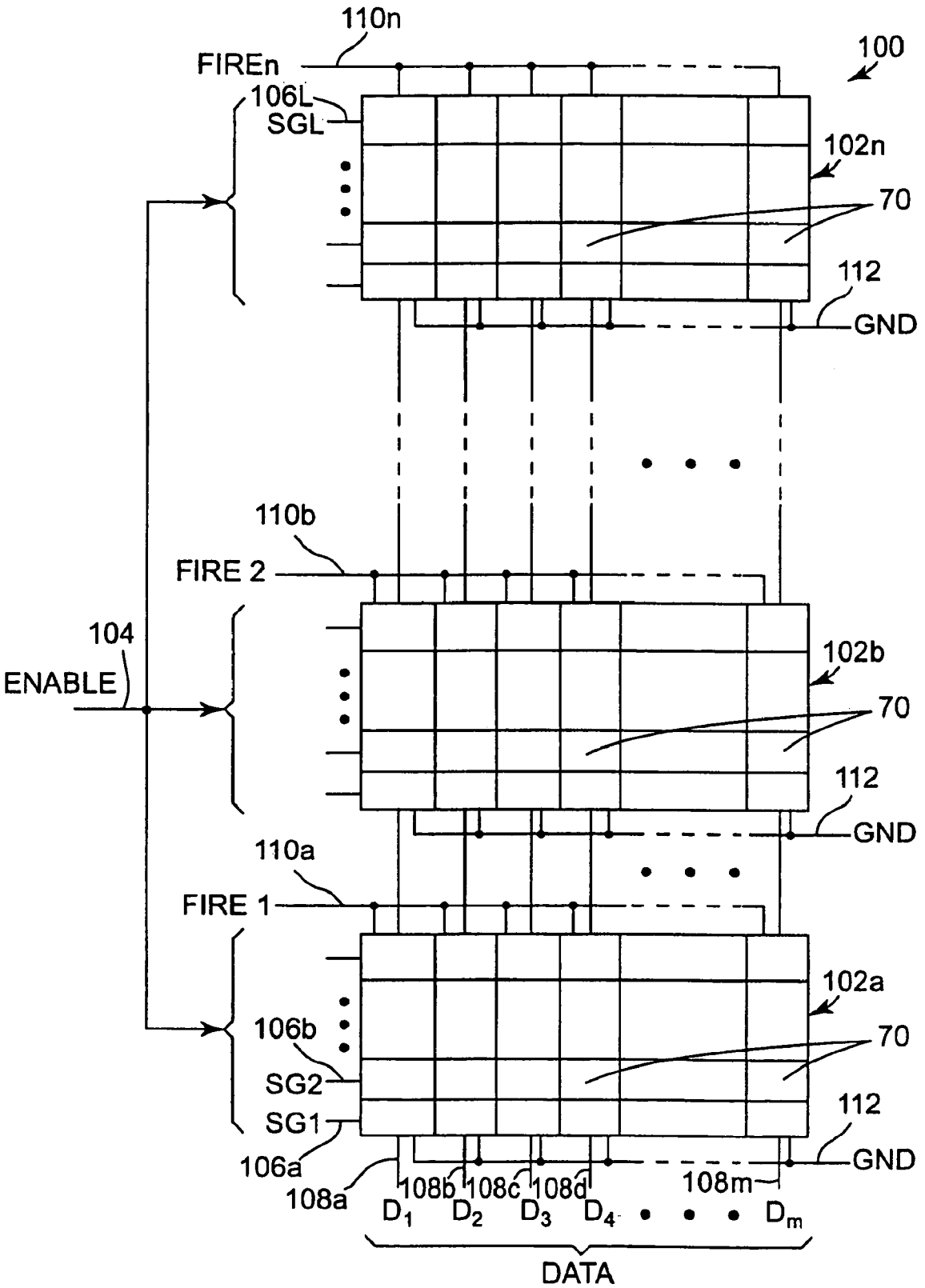
110n
FIREn
100
106L
SGL
102n
70
112
GND
110b
FIRE 2
104
ENABLE
102b
70
112
GND
110a
FIRE 1
102a
106b
70
SG2
SG1
112
106a
GND
108a
108b
108c
108d
108m
D1
D2
D3
D4
Dm
DATA

Fig. 5

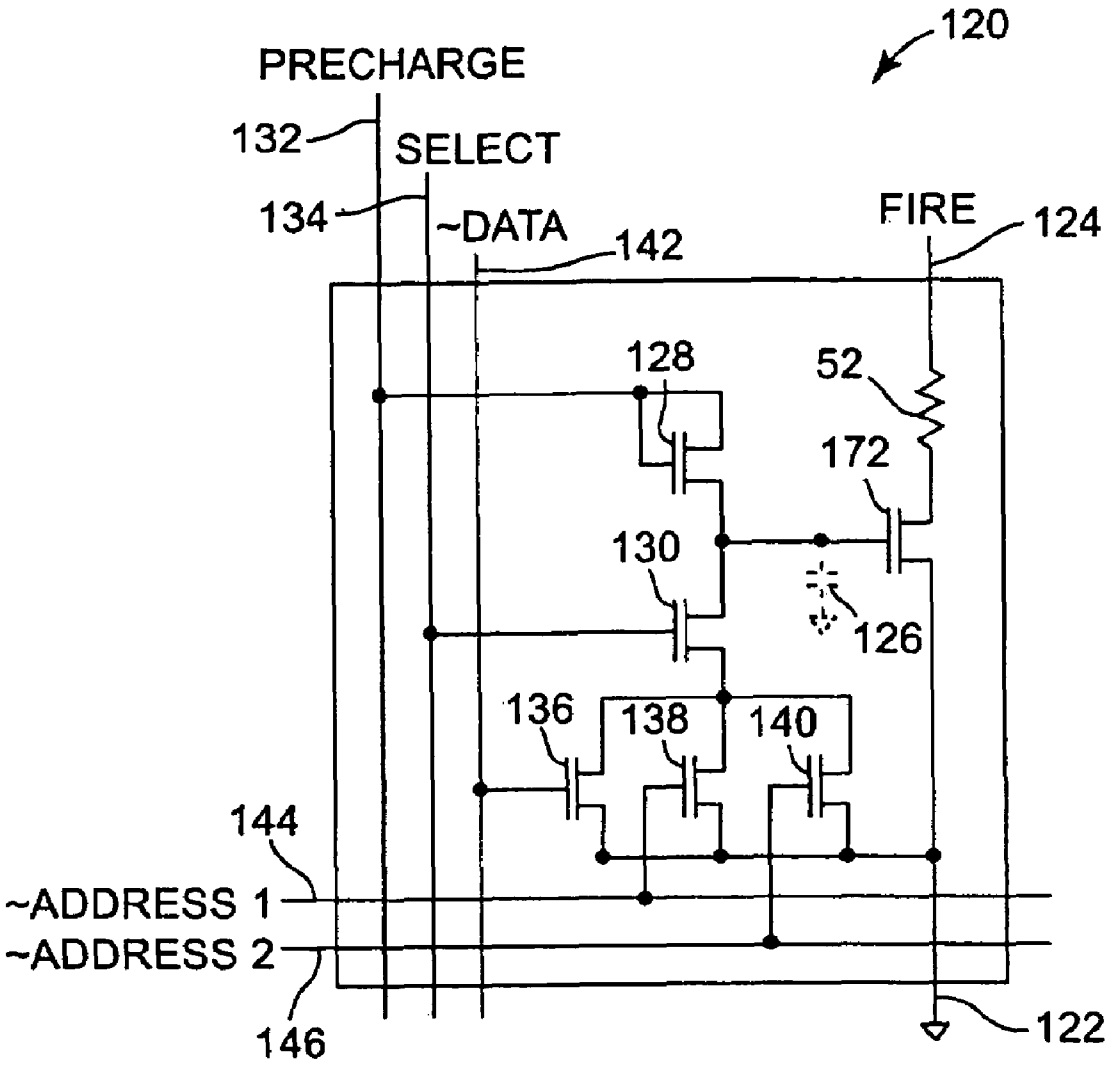
120
PRECHARGE
132
SELECT
134
~DATA
142
FIRE
124
128
52
172
130
126
136
138
140
144
~ADDRESS 1
~ADDRESS 2
146
122

Fig. 6

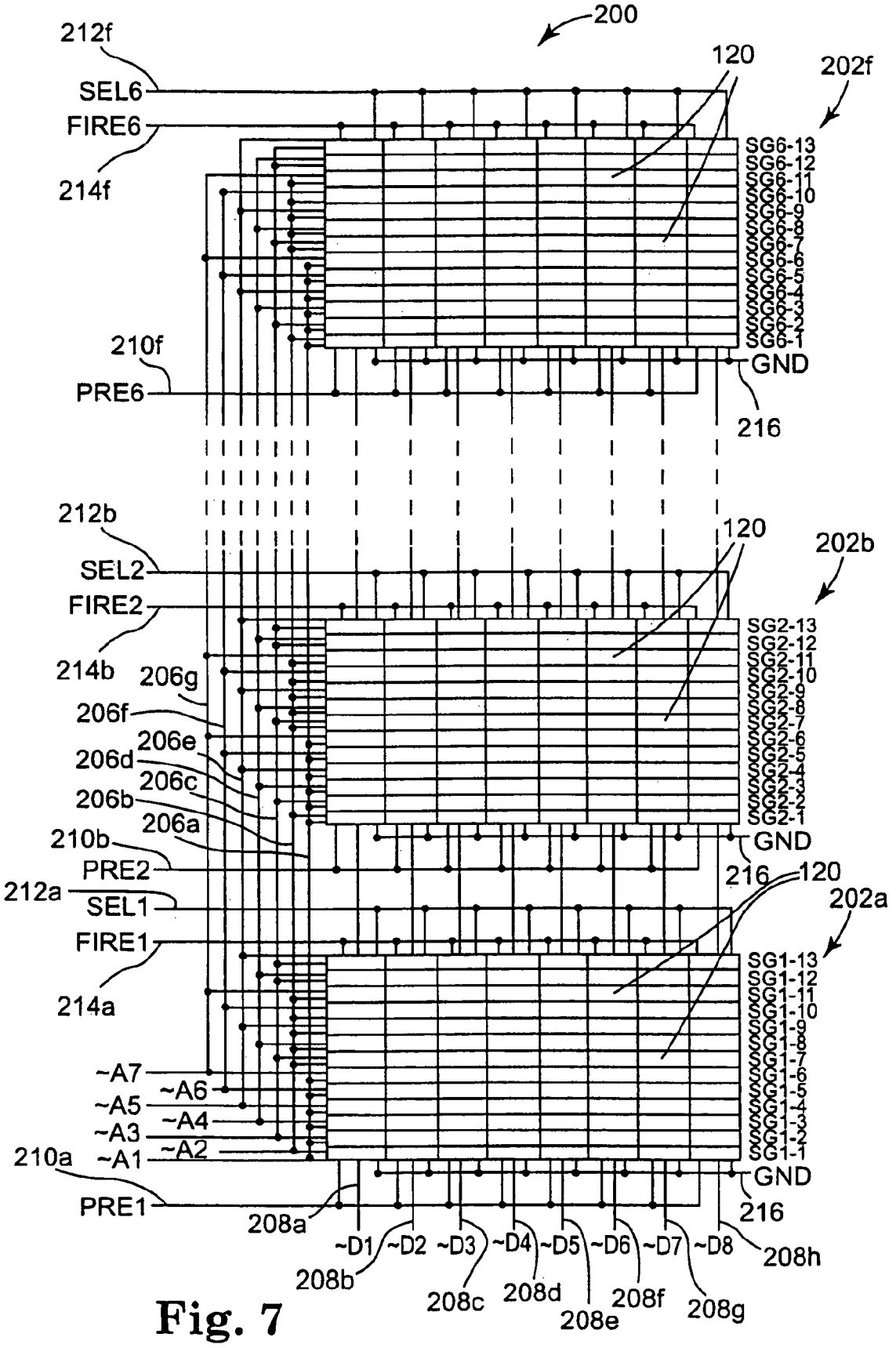
200
212f
SEL6
FIRE6
214f
120
202f
SG6-13
SG6-12
SG6-11
SG6-10
SG6-9
SG6-8
SG6-7
SG6-6
SG6-5
SG6-4
SG6-3
SG6-2
SG6-1
GND
210f
PRE6
216
212b
SEL2
FIRE2
214b
206g
206f
206e
206d
206c
206b
206a
210b
PRE2
212a
SEL1
FIRE1
214a
120
202b
SG2-13
SG2-12
SG2-11
SG2-10
SG2-9
SG2-8
SG2-7
SG2-6
SG2-5
SG2-4
SG2-3
SG2-2
SG2-1
GND
216
120
202a
SG1-13
SG1-12
SG1-11
SG1-10
SG1-9
SG1-8
SG1-7
SG1-6
SG1-5
SG1-4
SG1-3
SG1-2
SG1-1
GND
216
~A7
~A6
~A5
~A4
~A3
~A2
~A1
210a
PRE1
208a
~D1
~D2
~D3
~D4
~D5
~D6
~D7
~D8
208h
208b
208c
208d
208e
208f
208g

Fig. 7

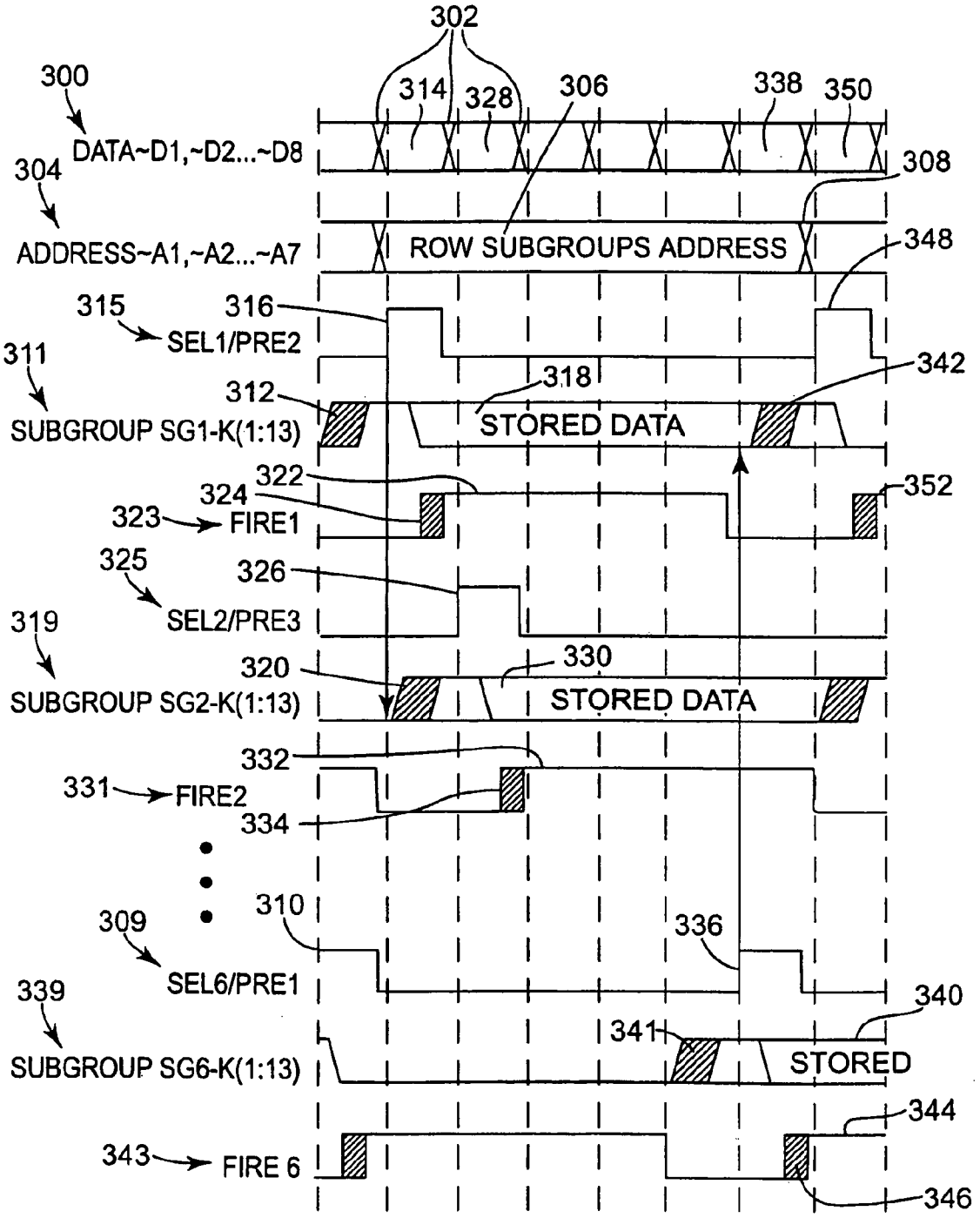
302
300
314
328
306
338
350
DATA~D1,~D2...~D8
304
308
ADDRESS~A1,~A2...~A7
ROW SUBGROUPS ADDRESS
348
315
316
SEL1/PRE2
311
342
318
312
SUBGROUP SG1-K(1:13)
STORED DATA
322
324
352
323
FIRE1
325
326
SEL2/PRE3
319
330
320
SUBGROUP SG2-K(1:13)
STORED DATA
332
331
FIRE2
334
310
336
309
SEL6/PRE1
339
340
341
SUBGROUP SG6-K(1:13)
STORED
344
343
FIRE 6
346

Fig. 8

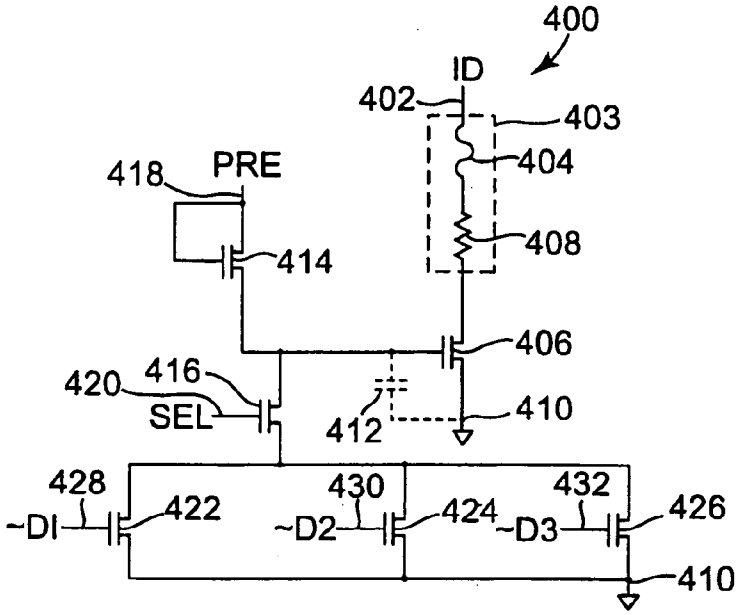
400
ID
402
403
404
418
PRE
408
414
406
420
416
SEL
412
410
428
430
432
~DI
422
~D2
424
~D3
426
410

Fig. 9

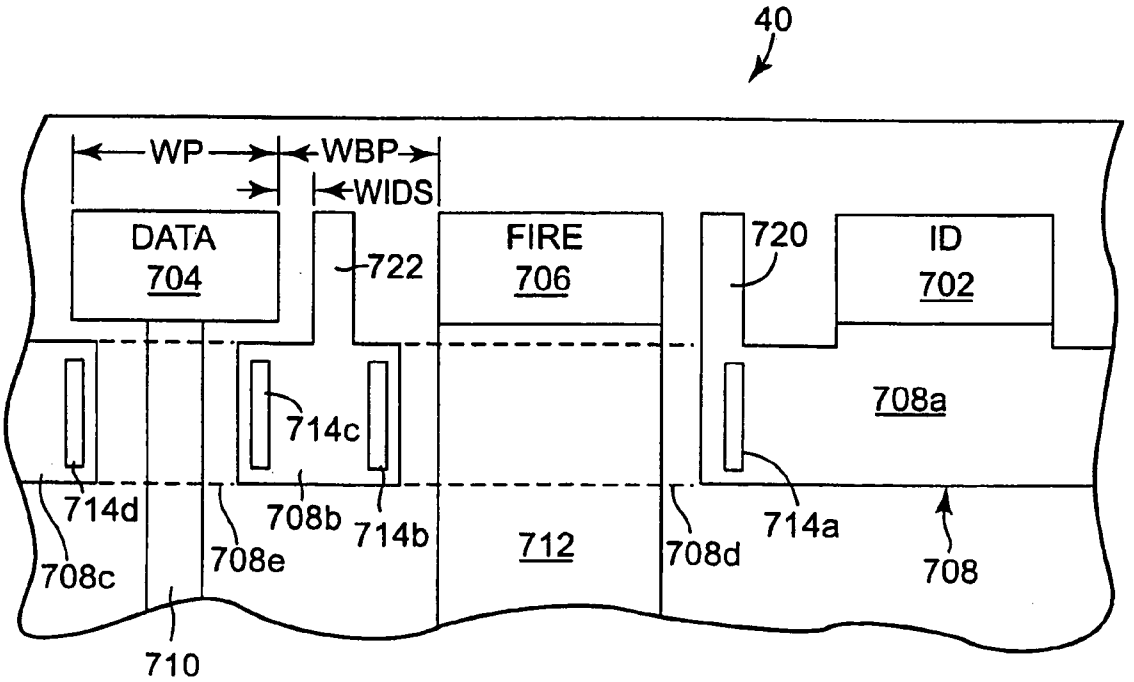
40
WP
WBP
WIDS
DATA
704
722
FIRE
706
720
ID
702
708a
714c
714d
708b
714b
712
708d
714a
708c
708e
708
710

Fig. 10

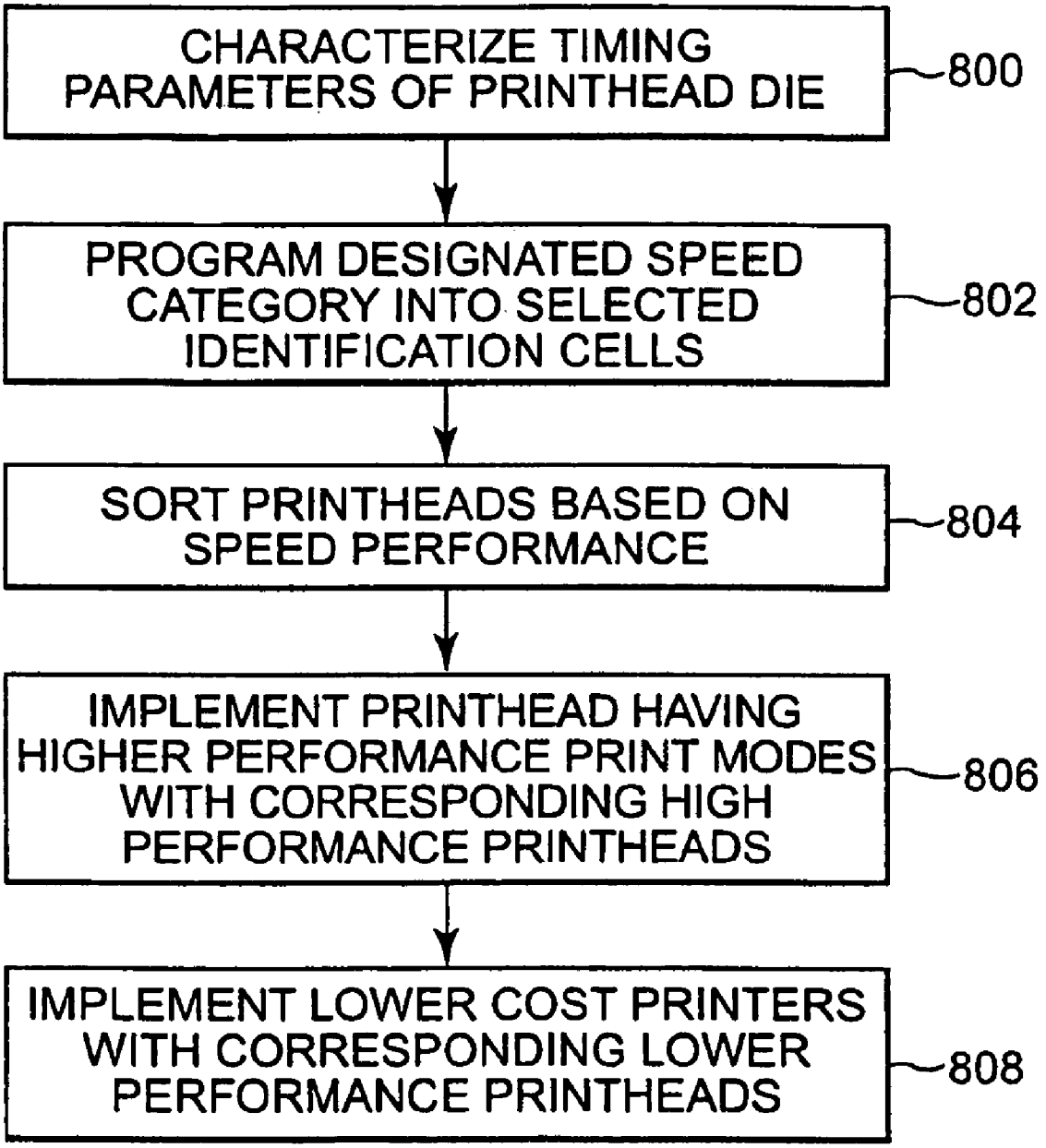
CHARACTERIZE TIMING PARAMETERS OF PRINTHEAD DIE
800
PROGRAM DESIGNATED SPEED CATEGORY INTO SELECTED IDENTIFICATION CELLS
802
SORT PRINTHEADS BASED ON SPEED PERFORMANCE
804
IMPLEMENT PRINTHEAD HAVING HIGHER PERFORMANCE PRINT MODES WITH CORRESPONDING HIGH PERFORMANCE PRINTHEADS
806
IMPLEMENT LOWER COST PRINTERS WITH CORRESPONDING LOWER PERFORMANCE PRINTHEADS
808

Fig. 11

FLUID EJECTION DEVICE WITH IDENTIFICATION CELLS

CROSS-REFERENCE TO RELATED APPLICATIONS

This application is related to patent application Ser. No. 10/827,030, entitled "Fluid Ejection Device," patent application Ser. No. 10/827,163, entitled "Fluid Ejection Device With Address Generator," patent application Ser. No. 10/827,045, entitled "Device With Gates Configured In Loop Structures," patent application Ser. No. 10/827,142, entitled "Fluid Ejection Device," and patent application Ser. No. 10/827,139, entitled "Fluid Ejection Device," each of which are assigned to the Assignee of this application and are filed on even date herewith, and each of which is fully incorporated by reference as if fully set forth herein.

BACKGROUND

An inkjet printing system, as one embodiment of a fluid ejection system, may include a printhead, an ink supply that provides liquid ink to the printhead, and an electronic controller that controls the printhead. The printhead, as one embodiment of a fluid ejection device, ejects ink drops through a plurality of orifices or nozzles. The ink is projected toward a print medium, such as a sheet of paper, to print an image onto the print medium. The nozzles are typically arranged in one or more arrays, such that properly sequenced ejection of ink from the nozzles causes characters or other images to be printed on the print medium as the printhead and the print medium are moved relative to each other.

In a typical thermal inkjet printing system, the printhead ejects ink drops through nozzles by rapidly heating small volumes of ink located in vaporization chambers. The ink is heated with small electric heaters, such as thin film resistors referred to herein as firing resistors. Heating the ink causes the ink to vaporize and be ejected through the nozzles.

To eject one drop of ink, the electronic controller that controls the printhead activates an electrical current from a power supply external to the printhead. The electrical current is passed through a selected firing resistor to heat the ink in a corresponding selected vaporization chamber and eject the ink through a corresponding nozzle. Known drop generators include a firing resistor, a corresponding vaporization chamber, and a corresponding nozzle.

In fluid ejection device it is desirable to have several characteristics of each print cartridge easily identifiable by a controller. Ideally the identification information should be supplied directly by the print cartridge. The "identification information" provides information to the controller to adjust the operation of the printer and ensures correct operation.

As the different types of fluid ejection devices and their operating parameters increase, there is a need to provide a greater amount of identification information. At the same time, it is not desirable to add further interconnections to the flex tab circuit or to increase the size of the die to provide such identification information.

For these and other reasons, there is a need for the present invention.

BRIEF DESCRIPTION OF THE DRAWINGS

FIG. **1** illustrates one embodiment of an ink jet printing system.

FIG. **2** is a diagram illustrating a portion of one embodiment of a printhead die.

FIG. **3** is a diagram illustrating a layout of drop generators located along an ink feed slot in the one embodiment of a printhead die.

FIG. **4** is a diagram illustrating one embodiment of a firing cell employed in one embodiment of a printhead die.

FIG. **5** is a schematic diagram illustrating one embodiment of an ink jet printhead firing cell array.

FIG. **6** is a schematic diagram illustrating one embodiment of a pre-charged firing cell.

FIG. **7** is a schematic diagram illustrating one embodiment of an ink jet printhead firing cell array.

FIG. **8** is a timing diagram illustrating the operation of one embodiment of a firing cell array.

FIG. **9** is a schematic diagram illustrating one embodiment of an identification cell in one embodiment of a printhead die.

FIG. **10** is a layout diagram illustrating one embodiment of a portion of a printhead die.

FIG. **11** is a flow chart illustrating one embodiment of a manufacturing process employing selected identification cells in certain embodiments of a printhead die.

DETAILED DESCRIPTION

In the following detailed description, reference is made to the accompanying drawings which form a part hereof, and in which is shown by way of illustration specific embodiments in which the invention may be practiced. In this regard, directional terminology, such as "top," "bottom," "front," "back," "leading," "trailing," etc., is used with reference to the orientation of the Figure(s) being described. Because components of embodiments of the present invention can be positioned in a number of different orientations, the directional terminology is used for purposes of illustration and is in no way limiting. It is to be understood that other embodiments may be utilized and structural or logical changes may be made without departing from the scope of the present invention. The following detailed description, therefore, is not to be taken in a limiting sense, and the scope of the present invention is defined by the appended claims.

FIG. **1** illustrates one embodiment of an inkjet printing system **20**. Inkjet printing system **20** constitutes one embodiment of a fluid ejection system that includes a fluid ejection device, such as inkjet printhead assembly **22**, and a fluid supply assembly, such as ink supply assembly **24**. The inkjet printing system **20** also includes a mounting assembly **26**, a media transport assembly **28**, and an electronic controller **30**. At least one power supply **32** provides power to the various electrical components of inkjet printing system **20**.

In one embodiment, inkjet printhead assembly **22** includes at least one printhead or printhead die **40** that ejects drops of ink through a plurality of orifices or nozzles **34** toward a print medium **36** so as to print onto print medium **36**. Printhead **40** is one embodiment of a fluid ejection device. Print medium **36** may be any type of suitable sheet material, such as paper, card stock, transparencies, Mylar, fabric, and the like. Typically, nozzles **34** are arranged in one or more columns or arrays such that properly sequenced ejection of ink from nozzles **34** causes characters, symbols, and/or other graphics or images to be printed upon print medium **36** as inkjet printhead assembly **22** and print medium **36** are moved relative to each other. While the following description refers to the ejection of ink from printhead assembly **22**, it is understood that other liquids, fluids or flowable materials, including clear fluid, may be ejected from printhead assembly **22**.

Ink supply assembly **24** as one embodiment of a fluid supply assembly provides ink to printhead assembly **22** and includes a reservoir **38** for storing ink. As such, ink flows from reservoir **38** to inkjet printhead assembly **22**. Ink supply assembly **24** and inkjet printhead assembly **22** can form either a one-way ink delivery system or a recirculating ink delivery system. In a one-way ink delivery system, substantially all of the ink provided to inkjet printhead assembly **22** is consumed during printing. In a recirculating ink delivery system, only a portion of the ink provided to printhead assembly **22** is consumed during printing. As such, ink not consumed during printing is returned to ink supply assembly **24**.

In one embodiment, inkjet printhead assembly **22** and ink supply assembly **24** are housed together in an inkjet cartridge or pen. The inkjet cartridge or pen is one embodiment of a fluid ejection device. In another embodiment, ink supply assembly **24** is separate from inkjet printhead assembly **22** and provides ink to inkjet printhead assembly **22** through an interface connection, such as a supply tube (not shown). In either embodiment, reservoir **38** of ink supply assembly **24** may be removed, replaced, and/or refilled. In one embodiment, where inkjet printhead assembly **22** and ink supply assembly **24** are housed together in an inkjet cartridge, reservoir **38** includes a local reservoir located within the cartridge and may also include a larger reservoir located separately from the cartridge. As such, the separate, larger reservoir serves to refill the local reservoir. Accordingly, the separate, larger reservoir and/or the local reservoir may be removed, replaced, and/or refilled.

Mounting assembly **26** positions inkjet printhead assembly **22** relative to media transport assembly **28** and media transport assembly **28** positions print medium **36** relative to inkjet printhead assembly **22**. Thus, a print zone **37** is defined adjacent to nozzles **34** in an area between inkjet printhead assembly **22** and print medium **36**. In one embodiment, inkjet printhead assembly **22** is a scanning type printhead assembly. As such, mounting assembly **26** includes a carriage (not shown) for moving inkjet printhead assembly **22** relative to media transport assembly **28** to scan print medium **36**. In another embodiment, inkjet printhead assembly **22** is a non-scanning type printhead assembly. As such, mounting assembly **26** fixes inkjet printhead assembly **22** at a prescribed position relative to media transport assembly **28**. Thus, media transport assembly **28** positions print medium **36** relative to inkjet printhead assembly **22**.

Electronic controller or printer controller **30** typically includes a processor, firmware, and other electronics, or any combination thereof, for communicating with and controlling inkjet printhead assembly **22**, mounting assembly **26**, and media transport assembly **28**. Electronic controller **30** receives data **39** from a host system, such as a computer, and usually includes memory for temporarily storing data **39**. Typically, data **39** is sent to inkjet printing system **20** along an electronic, infrared, optical, or other information transfer path. Data **39** represents, for example, a document and/or file to be printed. As such, data **39** forms a print job for inkjet printing system **20** and includes one or more print job commands and/or command parameters.

In one embodiment, electronic controller **30** controls inkjet printhead assembly **22** for ejection of ink drops from nozzles **34**. As such, electronic controller **30** defines a pattern of ejected ink drops that form characters, symbols, and/or other graphics or images on print medium **36**. The pattern of ejected ink drops is determined by the print job commands and/or command parameters.

In one embodiment, inkjet printhead assembly **22** includes one printhead **40**. In another embodiment, inkjet printhead assembly **22** is a wide-array or multi-head printhead assembly. In one wide-array embodiment, inkjet printhead assembly **22** includes a carrier, which carries printhead dies **40**, provides electrical communication between printhead dies **40** and electronic controller **30**, and provides fluidic communication between printhead dies **40** and ink supply assembly **24**.

FIG. **2** is a diagram illustrating a portion of one embodiment of a printhead die **40**. The printhead die **40** includes an array of printing or fluid ejecting elements **42**. Printing elements **42** are formed on a substrate **44**, which has an ink feed slot **46** formed therein. As such, ink feed slot **46** provides a supply of liquid ink to printing elements **42**. Ink feed slot **46** is one embodiment of a fluid feed source. Other embodiments of fluid feed sources include but are not limited to corresponding individual ink feed holes feeding corresponding vaporization chambers and multiple shorter ink feed trenches that each feed corresponding groups of fluid ejecting elements. A thin-film structure **48** has an ink feed channel **54** formed therein which communicates with ink feed slot **46** formed in substrate **44**. An orifice layer **50** has a front face **50***a* and a nozzle opening **34** formed in front face **50***a*. Orifice layer **50** also has a nozzle chamber or vaporization chamber **56** formed therein which communicates with nozzle opening **34** and ink feed channel **54** of thin-film structure **48**. A firing resistor **52** is positioned within vaporization chamber **56** and leads **58** electrically couple firing resistor **52** to circuitry controlling the application of electrical current through selected firing resistors. A drop generator **60** as referred to herein includes firing resistor **52**, nozzle chamber or vaporization chamber **56** and nozzle opening **34**.

During printing, ink flows from ink feed slot **46** to vaporization chamber **56** via ink feed channel **54**. Nozzle opening **34** is operatively associated with firing resistor **52** such that droplets of ink within vaporization chamber **56** are ejected through nozzle opening **34** (e.g., substantially normal to the plane of firing resistor **52**) and toward print medium **36** upon energizing of firing resistor **52**.

Example embodiments of printhead dies **40** include a thermal printhead, a piezoelectric printhead, an electrostatic printhead, or any other type of fluid ejection device known in the art that can be integrated into a multi-layer structure. Substrate **44** is formed, for example, of silicon, glass, ceramic, or a stable polymer and thin-film structure **48** is formed to include one or more passivation or insulation layers of silicon dioxide, silicon carbide, silicon nitride, tantalum, polysilicon glass, or other suitable material. Thin-film structure **48**, also, includes at least one conductive layer, which defines firing resistor **52** and leads **58**. In one embodiment, the conductive layer comprises, for example, aluminum, gold, tantalum, tantalum-aluminum, or other metal or metal alloy. In one embodiment, firing cell circuitry, such as described in detail below, is implemented in substrate and thin-film layers, such as substrate **44** and thin-film structure **48**.

In one embodiment, orifice layer **50** comprises a photoimageable epoxy resin, for example, an epoxy referred to as SU8, marketed by Micro-Chem, Newton, Mass. Exemplary techniques for fabricating orifice layer **50** with SU8 or other polymers are described in detail in U.S. Pat. No. 6,162,589, which is herein incorporated by reference. In one embodiment, orifice layer **50** is formed of two separate layers referred to as a barrier layer (e.g., a dry film photo resist barrier layer) and a metal orifice layer (e.g., a nickel, copper,

iron/nickel alloys, palladium, gold, or rhodium layer) formed over the barrier layer. Other suitable materials, however, can be employed to form orifice layer **50**.

FIG. **3** is a diagram illustrating drop generators **60** located along ink feed slot **46** in one embodiment of printhead die **40**. Ink feed slot **46** includes opposing ink feed slot sides **46***a* and **46***b*. Drop generators **60** are disposed along each of the opposing ink feed slot sides **46***a* and **46***b*. A total of n drop generators **60** are located along ink feed slot **46**, with m drop generators **60** located along ink feed slot side **46***a*, and n−m drop generators **60** located along ink feed slot side **46***b*. In one embodiment, n equals 200 drop generators **60** located along ink feed slot **46** and m equals 100 drop generators **60** located along each of the opposing ink feed slot sides **46***a* and **46***b*. In other embodiments, any suitable number of drop generators **60** can be disposed along ink feed slot **46**.

Ink feed slot **46** provides ink to each of the n drop generators **60** disposed along ink feed slot **46**. Each of the n drop generators **60** includes a firing resistor **52**, a vaporization chamber **56** and a nozzle **34**. Each of the n vaporization chambers **56** is fluidically coupled to ink feed slot **46** through at least one ink feed channel **54**. The firing resistors **52** of drop generators **60** are energized in a controlled sequence to eject fluid from vaporization chambers **56** and through nozzles **34** to print an image on print medium **36**.

FIG. **4** is a diagram illustrating one embodiment of a firing cell **70** employed in one embodiment of printhead die **40**. Firing cell **70** includes a firing resistor **52**, a resistor drive switch **72**, and a memory circuit **74**. Firing resistor **52** is part of a drop generator **60**. Drive switch **72** and memory circuit **74** are part of the circuitry that controls the application of electrical current through firing resistor **52**. Firing cell **70** is formed in thin-film structure **48** and on substrate **44**.

In one embodiment, firing resistor **52** is a thin-film resistor and drive switch **72** is a field effect transistor (FET). Firing resistor **52** is electrically coupled to a fire line **76** and the drain-source path of drive switch **72**. The drain-source path of drive switch **72** is also electrically coupled to a reference line **78** that is coupled to a reference voltage, such as ground. The gate of drive switch **72** is electrically coupled to memory circuit **74** that controls the state of drive switch **72**.

Memory circuit **74** is electrically coupled to a data line **80** and enable lines **82**. Data line **80** receives a data signal that represents part of an image and enable lines **82** receive enable signals to control operation of memory circuit **74**. Memory circuit **74** stores one bit of data as it is enabled by the enable signals. The logic level of the stored data bit sets the state (e.g., on or off, conducting or non-conducting) of drive switch **72**. The enable signals can include one or more select signals and one or more address signals.

Fire line **76** receives an energy signal comprising energy pulses and provides an energy pulse to firing resistor **52**. In one embodiment, the energy pulses are provided by electronic controller **30** to have timed starting times and timed duration to provide a proper amount of energy to heat and vaporize fluid in the vaporization chamber **56** of a drop generator **60**. If drive switch **72** is on (conducting), the energy pulse heats firing resistor **52** to heat and eject fluid from drop generator **60**. If drive switch **72** is off (non-conducting), the energy pulse does not heat firing resistor **52** and the fluid remains in drop generator **60**.

FIG. **5** is a schematic diagram illustrating one embodiment of an inkjet printhead firing cell array, indicated at **100**. Firing cell array **100** includes a plurality of firing cells **70** arranged into n fire groups **102***a*-**102***n*. In one embodiment, firing cells **70** are arranged into six fire groups **102***a*-**102***n*. In other embodiments, firing cells **70** can be arranged into any suitable number of fire groups **102***a*-**102***n*, such as four or more fire groups **102***a*-**102***n*.

The firing cells **70** in array **100** are schematically arranged into L rows and m columns. The L rows of firing cells **70** are electrically coupled to enable lines **104** that receive enable signals. Each row of firing cells **70**, referred to herein as a row subgroup or subgroup of firing cells **70**, is electrically coupled to one set of subgroup enable lines **106***a*-**106**L. The subgroup enable lines **106***a*-**106**L receive subgroup enable signals SG**1**, SG**2**, . . . SG_L that enable the corresponding subgroup of firing cells **70**.

The m columns are electrically coupled to m data lines **108***a*-**108***m* that receive data signals D**1**, D**2** . . . Dm, respectively. Each of the m columns includes firing cells **70** in each of the n fire groups **102***a*-**102***n* and each column of firing cells **70**, referred to herein as a data line group or data group, is electrically coupled to one of the data lines **108***a*-**108***m*. In other words, each of the data lines **108***a*-**108***m* is electrically coupled to each of the firing cells **70** in one column, including firing cells **70** in each of the fire groups **102***a*-**102***n*. For example, data line **108***a* is electrically coupled to each of the firing cells **70** in the far left column, including firing cells **70** in each of the fire groups **102***a*-**102***n*. Data line **108***b* is electrically coupled to each of the firing cells **70** in the adjacent column and so on, over to and including data line **108***m* that is electrically coupled to each of the firing cells **70** in the far right column, including firing cells **70** in each of the fire groups **102***a*-**102***n*.

In one embodiment, array **100** is arranged into six fire groups **102***a*-**102***n* and each of the six fire groups **102***a*-**102***n* includes 13 subgroups and eight data line groups. In other embodiments, array **100** can be arranged into any suitable number of fire groups **102***a*-**102***n* and into any suitable number of subgroups and data line groups. In any embodiment, fire groups **102***a*-**102***n* are not limited to having the same number of subgroups and data line groups. Instead, each of the fire groups **102***a*-**102***n* can have a different number of subgroups and/or data line groups as compared to any other fire group **102***a*-**102***n*. In addition, each subgroup can have a different number of firing cells **70** as compared to any other subgroup, and each data line group can have a different number of firing cells **70** as compared to any other data line group.

The firing cells **70** in each of the fire groups **102***a*-**102***n* are electrically coupled to one of the fire lines **110***a*-**110***n*. In fire group **102***a*, each of the firing cells **70** is electrically coupled to fire line **110***a* that receives fire signal or energy signal FIRE**1**. In fire group **102***b*, each of the firing cells **70** is electrically coupled to fire line **110***b* that receives fire signal or energy signal FIRE**2** and so on, up to and including fire group **102***n* wherein each of the firing cells **70** is electrically coupled to fire line **110***n* that receives fire signal or energy signal FIREn. In addition, each of the firing cells **70** in each of the fire groups **102***a*-**102***n* is electrically coupled to a common reference line **112** that is tied to ground.

In operation, subgroup enable signals SG**1**, SG**2**, . . . SG_L are provided on subgroup enable lines **106***a*-**106**L to enable one subgroup of firing cells **70**. The enabled firing cells **70** store data signals D**1**, D**2** . . . Dm provided on data lines **108***a*-**108***m*. The data signals D**1**, D**2** . . . Dm are stored in memory circuits **74** of enabled firing cells **70**. Each of the stored data signals D**1**, D**2** . . . Dm sets the state of drive switch **72** in one of the enabled firing cells **70**. The drive switch **72** is set to conduct or not conduct based on the stored data signal value.

After the states of the selected drive switches **72** are set, an energy signal FIRE**1**-FIREn is provided on the fire line **110***a*-**110***n* corresponding to the fire group **102***a*-**102***n* that includes the selected subgroup of firing cells **70**. The energy signal FIRE**1**-FIREn includes an energy pulse. The energy pulse is provided on the selected fire line **110***a*-**110***n* to energize firing resistors **52** in firing cells **70** that have conducting drive switches **72**. The energized firing resistors **52** heat and eject ink onto print medium **36** to print an image represented by data signals D**1**, D**2** . . . Dm. The process of enabling a subgroup of firing cells **70**, storing data signals D**1**, D**2** . . . Dm in the enabled, subgroup and providing an energy signal FIRE**1**-FIREn to energize firing resistors **52** in the enabled subgroup continues until printing stops.

In one embodiment, as an energy signal FIRE**1**-FIREn is provided to a selected fire group **102***a*-**102***n*, subgroup enable signals SG**1**, SG**2**, . . . SG_L change to select and enable another subgroup in a different fire group **102***a*-**102***n*. The newly enabled subgroup stores data signals D**1**, D**2** . . . Dm provided on data lines **108***a*-**108***m* and an energy signal FIRE**1**-FIREn is provided on one of the fire lines **110***a*-**110***n* to energize firing resistors **52** in the newly enabled firing cells **70**. At any one time, only one subgroup of firing cells **70** is enabled by subgroup enable signals SG**1**, SG**2**, . . . SG_L to store data signals D**1**, D**2** . . . Dm provided on data lines **108***a*-**108***m*. In this aspect, data signals D**1**, D**2** . . . Dm on data lines **108***a*-**108***m* are timed division multiplexed data signals. Also, only one subgroup in a selected fire group **102***a*-**102***n* includes drive switches **72** that are set to conduct while an energy signal FIRE**1**-FIREn is provided to the selected fire group **102***a*-**102***n*. However, energy signals FIRE**1**-FIREn provided to different fire groups **102***a*-**102***n* can and do overlap.

FIG. **6** is a schematic diagram illustrating one embodiment of a pre-charged firing cell **120**. Pre-charged firing cell **120** is one embodiment of firing cell **70**. The pre-charged firing cell **120** includes a drive switch **172** electrically coupled to a firing resistor **52**. In one embodiment, drive switch **172** is a FET including a drain-source path electrically coupled at one end to one terminal of firing resistor **52** and at the other end to a reference line **122**. The reference line **122** is tied to a reference voltage, such as ground. The other terminal of firing resistor **52** is electrically coupled to a fire line **124** that receives a fire signal or energy signal FIRE including energy pulses. The energy pulses energize firing resistor **52** if drive switch **172** is on (conducting).

The gate of drive switch **172** forms a storage node capacitance **126** that functions as a memory element to store data pursuant to the sequential activation of a pre-charge transistor **128** and a select transistor **130**. The drain-source path and gate of pre-charge transistor **128** are electrically coupled to a pre-charge line **132** that receives a pre-charge signal. The gate of drive switch **172** is electrically coupled to the drain-source path of pre-charge transistor **128** and the drain-source path of select transistor **130**. The gate of select transistor **130** is electrically coupled to a select line **134** that receives a select signal. The storage node capacitance **126** is shown in dashed lines, as it is part of drive switch **172**. Alternatively, a capacitor separate from drive switch **172** can be used as a memory element.

A data transistor **136**, a first address transistor **138** and a second address transistor **140** include drain-source paths that are electrically coupled in parallel. The parallel combination of data transistor **136**, first address transistor **138** and second address transistor **140** is electrically coupled between the drain-source path of select transistor **130** and reference line **122**. The serial circuit including select transistor **130** coupled to the parallel combination of data transistor **136**, first address transistor **138** and second address transistor **140** is electrically coupled across node capacitance **126** of drive switch **172**. The gate of data transistor **136** is electrically coupled to data line **142** that receives data signals ~DATA. The gate of first address transistor **138** is electrically coupled to an address line **144** that receives address signals ~ADDRESS**1** and the gate of second address transistor **140** is electrically coupled to a second address line **146** that receives address signals ~ADDRESS**2**. The data signals ~DATA and address signals ~ADDRESS**1** and ~ADDRESS**2** are active when low as indicated by the tilda (~) at the beginning of the signal name. The node capacitance **126**, pre-charge transistor **128**, select transistor **130**, data transistor **136** and address transistors **138** and **140** form a memory cell.

In operation, node capacitance **126** is pre-charged through pre-charge transistor **128** by providing a high level voltage pulse on pre-charge line **132**. In one embodiment, after the high level voltage pulse on pre-charge line **132**, a data signal ~DATA is provided on data line **142** to set the state of data transistor **136** and address signals ~ADDRESS**1** and ~ADDRESS**2** are provided on address lines **144** and **146** to set the states of first address transistor **138** and second address transistor **140**. A voltage pulse of sufficient magnitude is provided on select line **134** to turn on select transistor **130** and node capacitance **126** discharges if data transistor **136**, first address transistor **138** and/or second address transistor **140** is on. Alternatively, node capacitance **126** remains charged if data transistor **136**, first address transistor **138** and second address transistor **140** are all off.

Pre-charged firing cell **120** is an addressed firing cell if both address signals ~ADDRESS**1** and ~ADDRESS**2** are low and node capacitance **126** either discharges if data signal ~DATA is high or remains charged if data signal ~DATA is low. Pre-charged firing cell **120** is not an addressed firing cell if at least one of the address signals ~ADDRESS**1** and ~ADDRESS**2** is high and node capacitance **126** discharges regardless of the data signal ~DATA voltage level. The first and second address transistors **136** and **138** comprise an address decoder, and data transistor **136** controls the voltage level on node capacitance **126** if pre-charged firing cell **120** is addressed.

Pre-charged firing cell **120** may utilize any number of other topologies or arrangements, as long as the operational relationships described above are maintained. For example, an OR gate may be coupled to address lines **144** and **146**, the output of which is coupled to a single transistor.

FIG. **7** is a schematic diagram illustrating one embodiment of an inkjet printhead firing cell array **200**. Firing cell array **200** includes a plurality of pre-charged firing cells **120** arranged into six-fire groups **202***a*-**202***f*. The pre-charged firing cells **120** in each fire group **202***a*-**202***f* are schematically arranged into 13 rows and eight columns. The fire groups **202***a*-**202***f* and pre-charged firing cells **120** in array **200** are schematically arranged into 78 rows and eight columns, although the number of pre-charged firing cells and their layout may vary as desired.

The eight columns of pre-charged firing cells **120** are electrically coupled to eight data lines **208***a*-**208***h* that receive data signals ~D**1**, ~D**2** . . . ~D**8**, respectively. Each of the eight columns, referred to herein as a data line group or data group, includes pre-charged firing cells **120** in each of the six fire groups **202***a*-**202***f*. Each of the firing cells **120** in each column of pre-charged firing cells **120** is electrically coupled to one of the data lines **208***a*-**208***h*. All pre-charged firing cells **120** in a data line group are electrically coupled

to the same data line **208***a*-**208***h* that is electrically coupled to the gates of the data transistors **136** in the pre-charged firing cells **120** in the column.

Data line **208***a* is electrically coupled to each of the pre-charged firing cells **120** in the far left column, including pre-charged firing cells in each of the fire groups **202***a*-**202***f*. Data line **208***b* is electrically coupled to each of the pre-charged firing cells **120** in the adjacent column and so on, over to and including data line **208***h* that is electrically coupled to each of the pre-charged firing cells **120** in the far right column, including pre-charged firing cells **120** in each of the fire groups **202***a*-**202***f*.

The rows of pre-charged firing cells **120** are electrically coupled to address lines **206***a*-**206***g* that receive address signals ~A**1**, ~A**2** . . . ~A**7**, respectively. Each pre-charged firing cell **120** in a row of pre-charged firing cells **120**, referred to herein as a row subgroup or subgroup of pre-charged firing cells **120**, is electrically coupled to two of the address lines **206***a*-**206***g*. All pre-charged firing cells **120** in a row subgroup are electrically coupled to the same two address lines **206***a*-**206***g*.

The subgroups of the fire groups **202***a*-**202***f* are identified as subgroups SG**1**-**1** through SG**1**-**13** in fire group one (FG**1**) **202***a*, subgroups SG**2**-**1** through SG**2**-**13** in fire group two (FG**2**) **202***b* and so on, up to and including subgroups SG**6**-**1** through SG**6**-**13** in fire group six (FG**6**) **202***f*. In other embodiments, each fire group **202***a*-**202***f* can include any suitable number of subgroups, such as 14 or more subgroups.

Each subgroup of pre-charged firing cells **120** is electrically coupled to two address lines **206***a*-**206***g*. The two address lines **206***a*-**206***g* corresponding to a subgroup are electrically coupled to the first and second address transistors **138** and **140** in all pre-charged firing cells **120** of the subgroup. One address line **206***a*-**206***g* is electrically coupled to the gate of one of the first and second address transistors **138** and **140** and the other address line **206***a*-**206***g* is electrically coupled to the gate of the other one of the first and second address transistors **138** and **140**. The address lines **206***a*-**206***g* receive address signals ~A**1**, ~A**2** . . . ~A**7** and are coupled to provide the address signals ~A**1**, ~A**2** . . . ~A**7** to the subgroups of the array **200** as follows:

Row Subgroup Address Signals	Row Subgroups
~A1, ~A2	SG1-1, SG2-1 . . . SG6-1
~A1, ~A3	SG1-2, SG2-2 . . . SG6-2
~A1, ~A4	SG1-3, SG2-3 . . . SG6-3
~A1, ~A5	SG1-4, SG2-4 . . . SG6-4
~A1, ~A6	SG1-5, SG2-5 . . . SG6-5
~A1, ~A7	SG1-6, SG2-6 . . . SG6-6
~A2, ~A3	SG1-7, SG2-7 . . . SG6-7
~A2, ~A4	SG1-8, SG2-8 . . . SG6-8
~A2, ~A5	SG1-9, SG2-9 . . . SG6-9
~A2, ~A6	SG1-10, SG2-10 . . . SG6-10
~A2, ~A7	SG1-11, SG2-11 . . . SG6-11
~A3, ~A4	SG1-12, SG2-12 . . . SG6-12
~A3, ~A5	SG1-13, SG2-13 . . . SG6-13

Subgroups of pre-charged firing cells **120** are addressed by providing address signals ~A**1**, ~A**2** . . . ~A**7** on address lines **206***a*-**206***g*. In one embodiment, the address lines **206***a*-**206***g* are electrically coupled to one or more address generators provided on printhead die **40**.

Pre-charge lines **210***a*-**210***f* receive pre-charge signals PRE**1**, PRE**2** . . . PRE**6** and provide the pre-charge signals PRE**1**, PRE**2** . . . PRE**6** to corresponding fire groups **202***a*-**202***f*. Pre-charge line **210***a* is electrically coupled to all of the pre-charged firing cells **120** in FG**1** **202***a*. Pre-charge line **210***b* is electrically coupled to all pre-charged firing cells **120** in FG**2** **202***b* and so on, up to and including pre-charge line **210***f* that is electrically coupled to all pre-charged firing cells **120** in FG**6** **202***f*. Each of the pre-charge lines **210***a*-**210***f* is electrically coupled to the gate and drain-source path of all of the pre-charge transistors **128** in the corresponding fire group **202***a*-**202***f*, and all pre-charged firing cells **120** in a fire group **202***a*-**202***f* are electrically coupled to only one pre-charge line **210***a*-**210***f*. Thus, the node capacitances **126** of all pre-charged firing cells **120** in a fire group **202***a*-**202***f* are charged by providing the corresponding pre-charge signal PRE**1**, PRE**2** . . . PRE**6** to the corresponding pre-charge line **210***a*-**210***f*.

Select lines **212***a*-**212***f* receive select signals SEL**1**, SEL**2** . . . SEL**6** and provide the select signals SEL**1**, SEL**2** . . . SEL**6** to corresponding fire groups **202***a*-**202***f*. Select line **212***a* is electrically coupled to all pre-charged firing cells **120** in FG**1** **202***a*. Select line **212***b* is electrically coupled to all pre-charged firing cells **120** in FG**2** **202***b* and so on, up to and including select line **212***f* that is electrically coupled to all pre-charged firing cells **120** in FG**6** **202***f*. Each of the select lines **212***a*-**212***f* is electrically coupled to the gate of all of the select transistors **130** in the corresponding fire group **202***a*-**202***f*, and all pre-charged firing cells **120** in a fire group **202***a*-**202***f* are electrically coupled to only one select line **212***a*-**212***f*.

Fire lines **214***a*-**214***f* receive fire signals or energy signals FIRE**1**, FIRE**2** . . . FIRE**6** and provide the energy signals FIRE**1**, FIRE**2** . . . FIRE**6** to corresponding fire groups **202***a*-**202***f*. Fire line **214***a* is electrically coupled to all pre-charged firing cells **120** in FG**1** **202***a*. Fire line **214***b* is electrically coupled to all pre-charged firing cells **120** in FG**2** **202***b* and so on, up to and including fire line **214***f* that is electrically coupled to all pre-charged firing cells **120** in FG**6** **202***f*. Each of the fire lines **214***a*-**214***f* is electrically coupled to all of the firing resistors **52** in the corresponding fire group **202***a*-**202***f*, and all pre-charged firing cells **120** in a fire group **202***a*-**202***f* are electrically coupled to only one fire line **214***a*-**214***f*. The fire lines **214***a*-**214***f* are electrically coupled to external supply circuitry by appropriate interface pads. (See, FIG. **25**). All pre-charged firing cells **120** in array **200** are electrically coupled to a reference line **216** that is tied to a reference voltage, such as ground. Thus, the pre-charged firing cells **120** in a row subgroup of pre-charged firing cells **120** are electrically coupled to the same address lines **206***a*-**206***g*, pre-charge line **210***a*-**210***f*, select line **212***a*-**212***f* and fire line **214***a*-**214***f*.

In operation, in one embodiment fire groups **202***a*-**202***f* are selected to fire in succession. FG**1** **202***a* is selected before FG**2** **202***b*, which is selected before FG**3** and so on, up to FG**6** **202***f*. After FG**6** **202***f*, the fire group cycle starts over with FG**1** **202***a*. However, other sequences, and non-sequential selections may be utilized.

The address signals ~A**1**, ~A**2** . . . ~A**7** cycle through the 13 row subgroup addresses before repeating a row subgroup address. The address signals ~A**1**, ~A**2** . . . ~A**7** provided on address lines **206***a*-**206***g* are set to one row subgroup address during each cycle through the fire groups **202***a*-**202***f*. The address signals ~A**1** ~A**2** . . . ~A**7** select one row subgroup in each of the fire groups **202***a*-**202***f* for one cycle through the fire groups **202***a*-**202***f*. For the next cycle through fire groups **202***a*-**202***f*, the address signals ~A**1**, ~A**2** . . . ~A**7** are changed to select another row subgroup in each of the fire groups **202***a*-**202***f*. This continues up to the address signals ~A**1**, ~A**2** . . . ~A**7** selecting the last row subgroup

in fire groups **202***a*-**202***f*. After the last row subgroup, address signals ~A**1**, ~A**2** . . . ~A**7** select the first row subgroup to begin the address cycle over again.

In another aspect of operation, one of the fire groups **202***a*-**202***f* is operated by providing a pre-charge signal PRE**1**, PRE**2** . . . PRE**6** on the pre-charge line **210***a*-**210***f* of the one fire group **202***a*-**202***f*. The pre-charge signal PRE**1**, RE**2** . . . PRE**6** defines a pre-charge time interval or period during which time the node capacitance **126** on each drive switch **172** in the one fire group **202***a*-**202***f* is charged to a high voltage level, to pre-charge the one fire group **202***a*-**202***f*.

Address signals ~A**1**, ~A**2** . . . ~A**7** are provided on address lines **206***a*-**206***g* to address one row subgroup in each of the fire groups **202***a*-**202***f*, including one row subgroup in the pre-charged fire group **202***a*-**202***f*. Data signals ~D**1**, ~D**2** . . . ~D**8** are provided on data lines **208***a*-**208***h* to provide data to all fire groups **202***a*-**202***f*, including the addressed row subgroup in the pre-charged fire group **202***a*-**202***f*.

Next, a select signal SEL**1**, SEL**2** . . . SEL**6** is provided on the select line **212***a*-**212***f* of the pre-charged fire group **202***a*-**202***f* to select the pre-charged fire group **202***a*-**202***f*. The select signal SEL**1**, SEL**2** . . . SEL**6** defines a discharge time interval for discharging the node capacitance **126** on each drive switch **172** in a pre-charged firing cell **120** that is either not in the addressed row subgroup in the selected fire group **202***a*-**202***f* or addressed in the selected fire group **202***a*-**202***f* and receiving a high level data signal ~D**1**, ~D**2** . . . ~D**8**. The node capacitance **126** does not discharge in pre-charged firing cells **120** that are addressed in the selected fire group **202***a*-**202***f* and receiving a low level data signal ~D**1**, ~D**2** . . . ~D**8**. A high voltage level on the node capacitance **126** turns the drive switch **172** on (conducting).

After drive switches **172** in the selected fire group **202***a*-**202***f* are set to conduct or not conduct, an energy pulse or voltage pulse is provided on the fire line **214***a*-**214***f* of the selected fire group **202***a*-**202***f*. Pre-charged firing cells **120** that have conducting drive switches **172**, conduct current through the firing resistor **52** to heat ink and eject ink from the corresponding drop generator **60**.

With fire groups **202***a*-**202***f* operated in succession, the select signal SEL**1**, SEL**2** . . . SEL**6** for one fire group **202***a*-**202***f* is used as the pre-charge signal PRE**1**, PRE**2** . . . PRE**6** for the next fire group **202***a*-**202***f*. The pre-charge signal PRE**1**, PRE**2** . . . PRE**6** for one fire group **202***a*-**202***f* precedes the select signal SEL**1**, SEL**2** . . . SEL**6** and energy signal FIRE**1**, FIRE**2** . . . FIRE**6** for the one fire group **202***a*-**202***f*. After the pre-charge signal PRE**1**, PRE**2** . . . PRE**6**, data signals ~D**1**, ~D**2** . . . ~D**8** are multiplexed in time and stored in the addressed row subgroup of the one fire group **202***a*-**202***f* by the select signal SEL**1**, SEL**2** . . . SEL**6**. The select signal SEL**1**, SEL**2** . . . SEL**6** for the selected fire group **202***a*-**202***f* is also the pre-charge signal PRE**1**, PRE**2** . . . PRE**6** for the next fire group **202***a*-**202***f*. After the select signal SEL**1**, SEL**2** . . . SEL**6** for the selected fire group **202***a*-**202***f* is complete, the select signal SEL**1**, SEL**2** . . . SEL**6** for the next fire group **202***a*-**202***f* is provided. Pre-charged firing cells **120** in the selected subgroup fire or heat ink based on the stored data signal ~D**1**, ~D**2** . . . ~D**8** as the energy signal FIRE**1**, FIRE**2** . . . FIRE**6**, including an energy pulse, is provided to the selected fire group **202***a*-**202***f*.

FIG. **8** is a timing diagram illustrating the operation of one embodiment of firing cell array **200**. Fire groups **202***a*-**202***f* are selected in succession to energize pre-charged firing cells **120** based on data signals ~D**1**, ~D**2** . . . ~D**8**, indicated at **300**. The data signals ~D**1**, ~D**2** . . . ~D**8** at **300** are changed depending on the nozzles that are to eject fluid, indicated at **302**, for each row subgroup address and fire group **202***a*-**202***f* combination. Address signals ~A**1**, ~A**2** . . . ~A**7** at **304** are provided on address lines **206***a*-**206***g* to address one row subgroup from each of the fire groups **202***a*-**202***f*. The address signals ~A**1**, ~A**2** . . . ~A**7** at **304** are set to one address, indicated at **306**, for one cycle through fire groups **202***a*-**202***f*. After the cycle is complete, the address signals ~A**1**, ~A**2** . . . ~A**7** at **304** are changed at **308** to address a different row subgroup from each of the fire groups **202***a*-**202***f*. The address signals ~A**1**, ~A**2** . . . ~A**7** at **304** increment through the row subgroups to address the row subgroups in sequential order from one to 13 and back to one. In other embodiments, address signals ~A**1**, ~A**2** . . . ~A**7** at **304** can be set to address row subgroups in any suitable order.

During a cycle through fire groups **202***a*-**202***f*, select line **212***f* coupled to FG**6** **202***f* and pre-charge line **210***a* coupled to FG**1** **202***a* receive SEL**6**/PRE**1** signal **309**, including SEL**6**/PRE**1** signal pulse **310**. In one embodiment, the select line **212***f* and pre-charge line **210***a* are electrically coupled together to receive the same signal. In another embodiment, the select line **212***f* and pre-charge line **210***a* are not electrically coupled together, but receive similar signals.

The SEL**6**/PRE**1** signal pulse at **310** on pre-charge line **210***a*, pre-charges all firing cells **120** in FG**1** **202***a*. The node capacitance **126** for each of the pre-charged firing cells **120** in FG**1** **202***a* is charged to a high voltage level. The node capacitances **126** for pre-charged firing cells **120** in one row subgroup SG**1**-K, indicated at **311**, are pre-charged to a high voltage level at **312**. The row subgroup address at **306** selects subgroup SG**1**-K, and a data signal set at **314** is provided to data transistors **136** in all pre-charged firing cells **120** of all fire groups **202***a*-**202***f*, including the address selected row subgroup SG**1**-K.

The select line **212***a* for FG**1** **202***a* and pre-charge line **210***b* for FG**2** **202***b* receive the SEL**1**/PRE**2** signal **315**, including the SEL**1**/PRE**2** signal pulse **316**. The SEL**1**/PRE**2** signal pulse **316** on select line **212***a* turns on the select transistor **130** in each of the pre-charged firing cells **120** in FG**1** **202***a*. The node capacitance **126** is discharged in all pre-charged firing cells **120** in FG**1** **202***a* that are not in the address selected row subgroup SG**1**-K. In the address selected row subgroup SG**1**-K, data at **314** are stored, indicated at **318**, in the node capacitances **126** of the drive switches **172** in row subgroup SG**1**-K to either turn the drive switch on (conducting) or off (non-conducting).

The SEL**1**/PRE**2** signal pulse at **316** on pre-charge line **210***b*, pre-charges all firing cells **120** in FG**2** **202***b*. The node capacitance **126** for each of the pre-charged firing cells **120** in FG**2** **202***b* is charged to a high voltage level. The node capacitances **126** for pre-charged firing cells **120** in one row subgroup SG**2**-K, indicated at **319**, are pre-charged to a high voltage level at **320**. The row subgroup address at **306** selects subgroup SG**2**-K, and a data signal set at **328** is provided to data transistors **136** in all pre-charged firing cells **120** of all fire groups **202***a*-**202***f*, including the address selected row subgroup SG**2**-K.

The fire line **214***a* receives energy signal FIRE**1**, indicated at **323**, including an energy pulse at **322** to energize firing resistors **52** in pre-charged firing cells **120** that have conductive drive switches **172** in FG**1** **202***a*. The FIRE**1** energy pulse **322** goes high while the SEL**1**/PRE**2** signal pulse **316** is high and while the node capacitance **126** on non-conducting drive switches **172** are being actively pulled low, indicated on energy signal FIRE**1** **323** at **324**. Switching the

energy pulse **322** high while the node capacitances **126** are actively pulled low, prevents the node capacitances **126** from being inadvertently charged through the drive switch **172** as the energy pulse **322** goes high. The SEL**1**/PRE**2** signal **315** goes low and the energy pulse **322** is provided to FG**1** **202***a* for a predetermined time to heat ink and eject the ink through nozzles **34** corresponding to the conducting pre-charged firing cells **120**.

The select line **212***b* for FG**2** **202***b* and pre-charge line **210***c* for FG**3** **202***c* receive SEL**2**/PRE**3** signal **325**, including SEL**2**/PRE**3** signal pulse **326**. After the SEL**1**/PRE**2** signal pulse **316** goes low and while the energy pulse **322** is high, the SEL**2**/PRE**3** signal pulse **326** on select tine **212***b* turns on select transistor **130** in each of the pre-charged firing cells **120** in FG**2** **202***b*. The node capacitance **126** is discharged on all pre-charged firing cells **120** in FG**2** **202***b* that are not in the address selected row subgroup SG**2**-K. Data signal set **328** for subgroup SG**2**-K is stored in the pre-charged firing cells **120** of subgroup SG**2**-K, indicated at **330**, to either turn the drive switches **172** on (conducting) or off (non-conducting). The SEL**2**/PRE**3** signal pulse on pre-charge line **210***c* pre-charges all pre-charged firing cells **120** in FG**3** **202***c*.

Fire line **214***b* receives energy signal FIRE**2**, indicated at **331**, including energy pulse **332**, to energize firing resistors **52** in pre-charged firing cells **120** of FG**2** **202***b* that have conducting drive switches **172**. The FIRE**2** energy pulse **332** goes high while the SEL**2**/PRE**3** signal pulse **326** is high, indicated at **334**. The SEL**2**/PRE**3** signal pulse **326** goes low and the FIRE**2** energy pulse **332** remains high to heat and eject ink from the corresponding drop generator **60**.

After the SEL**2**/PRE**3** signal pulse **326** goes low and while the energy pulse **332** is high, a SEL**3**/PRE**4** signal is provided to select FG**3** **202***c* and pre-charge FG**4** **202***d*. The process of pre-charging, selecting and providing an energy signal, including an energy pulse, continues up to and including FG**6** **202***f*.

The SEL**5**/PRE**6** signal pulse on pre-charge line **210***f*, pre-charges all firing cells **120** in FG**6** **202***f*. The node capacitance **126** for each of the pre-charged firing cells **120** in FG**6** **202***f* is charged to a high voltage level. The node capacitances **126** for pre-charged firing cells **120** in one row subgroup SG**6**-K, indicated at **339**, are pre-charged to a high voltage level at **341**. The row subgroup address at **306** selects subgroup SG**6**-K, and data signal set **338** is provided to data transistors **136** in all pre-charged firing cells **120** of all fire groups **202***a*-**202***f*, including the address selected row subgroup SG**6**-K.

The select line **212***f* for FG**6** **202***f* and pre-charge line **210***a* for FG**1** **202***a* receive a second SEL**6**/PRE**1** signal pulse at **336**. The second SEL**6**/PRE**1** signal pulse **336** on select line **212***f* turns on the select transistor **130** in each of the pre-charged firing cells **120** in FG**6** **202***f*. The node capacitance **126** is discharged in all pre-charged firing cells **120** in FG**6** **202***f* that are not in the address selected row subgroup SG**6**-K. In the address selected row subgroup SG**6**-K, data **338** are stored at **340** in the node capacitances **126** of each drive switch **172** to either turn the drive switch on or off.

The SEL**6**/PRE**1** signal on pre-charge line **210***a*, pre-charges node capacitances **126** in all firing cells **120** in FG**1** **202***a*, including firing cells **120** in row subgroup SG**1**-K, indicated at **342**, to a high voltage level. The firing cells **120** in FG**1** **202***a* are pre-charged while the address signals ~A**1**, ~A**2** . . . ~A**7** **304** select row subgroups SG**1**-K, SG**2**-K and on, up to row subgroup SG**6**-K.

The fire line **214***f* receives energy signal FIRE**6**, indicated at **343**, including an energy pulse at **344** to energize fire resistors **52** in pre-charged firing cells **120** that have conductive drive switches **172** in FG**6** **202***f*. The energy pulse **344** goes high while the SEL**6**/PRE**1** signal pulse **336** is high and node capacitances **126** on non-conducting drive switches **172** are being actively pulled low, indicated at **346**. Switching the energy pulse **344** high while the node capacitances **126** are actively pulled low, prevents the node capacitances **126** from being inadvertently charged through drive switch **172** as the energy pulse **344** goes high. The SEL**6**/PRE**1** signal pulse **336** goes low and the energy pulse **344** is maintained high for a predetermined time to heat ink and eject ink through nozzles **34** corresponding to the conducting pre-charged firing cells **120**.

After the SEL**6**/PRE**1** signal pulse **336** goes low and while the energy pulse **344** is high, address signals ~A**1**, ~A**2** . . . ~A**7** **304** are changed at **308** to select another set of subgroups SG**1**-K+1, SG**2**-K+1 and so on, up to SG**6**-K+1. The select line **212***a* for FG**1** **202***a* and pre-charge line **210***b* for FG**2** **202***b* receive a SEL**1**/PRE**2** signal pulse, indicated at **348**. The SEL**1**/PRE**2** signal pulse **348** on select line **212***a* turns on the select transistor **130** in each of the pre-charged firing cells **120** in FG**1** **202***a*. The node capacitance **126** is discharged in all pre-charged firing cells **120** in FG**1** **202***a* that are not in the address selected subgroup SG**1**-K+1. Data signal set **350** for row subgroup SG**1**-K+1 is stored in the pre-charged firing cells **120** of subgroup SG**1**-K+1 to either turn drive switches **172** on or off. The SEL**1**/PRE**2** signal pulse **348** on pre-charge line **210***b* pre-charges all firing cells **120** in FG**2** **202***b*.

The fire line **214***a* receives energy pulse **352** to energize firing resistors **52** and pre-charged firing cells **120** of FG**1** **202***a* that have conducting drive switches **172**. The energy pulse **352** goes high while the SEL**1**/PRE**2** signal pulse at **348** is high. The SEL**1**/PRE**2** signal pulse **348** goes low and the energy pulse **352** remains high to heat and eject ink from corresponding drop generators **60**. The process continues until printing is complete.

FIG. **9** is a schematic diagram illustrating one embodiment of an identification cell **400** in one embodiment of a printhead die **40**. The printhead die **40** includes a plurality of identification cells electrically coupled to one identification line **402**. The identification line **402** receives an identification signal ID and provides the identification signal ID to the identification cells. Each of the identification cells is similar to identification cell **400**.

The identification cell **400** includes a memory element, indicated at **403**. The memory element **403** stores one bit of information. In one embodiment, memory element **403** is a fuse represented by fuse element **404** and fuse resistance **408**. In other embodiments, memory element **403** can be another suitable memory element, for example an anti-fuse that provides a high resistive state before being programmed and a low resistive state after being programmed with a program signal.

The identification cell **400** includes a drive switch **406** electrically coupled to memory element **403**. In one embodiment, drive switch **406** is a FET including a drain-source path electrically coupled at one end to one terminal of memory element **403** and at the other end to a reference **410**, such as ground. The other terminal of memory element **403** is electrically coupled to identification line **402**. The identification line **402** receives identification signal ID and provides identification signal ID to memory element **403**. The identification signal ID, including the program signal and the read signal, can be conducted through memory

element **403** if drive switch **406** is turned on (conducting). This allows for only specific identification cells **400** on a single identification line **402** to respond to read and programming signals on the identification line **402**, while other identification cells on the same identification line **402** do not respond to the read and programming signals.

The gate of drive switch **406** forms storage node capacitance **412**, which functions as a memory to store charge pursuant to the sequential activation of pre-charge transistor **414** and select transistor **416**. The drain-source path and gate of pre-charge transistor **414** are electrically coupled to pre-charge line **418** that receives a pre-charge signal PRE. In one embodiment, pre-charge line **418** is electrically connected to one of the pre-charge lines **210**, (FIG. **7**).

The gate of drive switch **406** is a control input that is electrically coupled to the drain-source path of pre-charge transistor **414** and the drain-source path of select transistor **416**. The gate of select transistor **416** is electrically coupled to select line **420** that receives a select signal SEL. In one embodiment, select line **420** is electrically connected to one of the select lines **212**, (FIG. **7**). The storage node capacitance **412** is shown in dashed lines, as it is part of drive switch **406**. Alternatively, a capacitor separate from drive switch **406** can be used to store charge.

A first transistor **422**, a second transistor **424** and a third transistor **426** include drain-source paths that are electrically coupled in parallel. The parallel combination of first transistor **422**, second transistor **424** and third transistor **426** is electrically coupled between the drain-source path of select transistor **416** and reference **410**. The serial circuit including select transistor **416** coupled to the parallel combination of first transistor **422**, second transistor **424** and third transistor **426** is electrically coupled across node capacitance **412** of drive switch **406**. The gate of first transistor **422** is electrically coupled to data line **428** that receives data signal ~D**1**. The gate of second transistor **424** is electrically coupled to data line **430** that receives data signal ~D**2** and the gate of third transistor **426** is electrically coupled to data line **432** that receives data signal ~D**3**. The data signals ~D**1**, ~D**2** and ~D**3** are active low as indicated by the tilda (~) preceding each signal name. The drive switch **406** including node capacitance **412**, pre-charge transistor **414**, select transistor **416**, first transistor **422**, second transistor **424** and third transistor **426** form a dynamic memory circuit or cell.

In one embodiment, data signals ~D**1**, ~D**2** and ~D**3** provided to identification cell **400** are data signals ~D**1**, ~D**2** and ~D**3** provided on data lines **208***a*-**208***c* to all fire groups **202***a*-**202***f* (FIG. **7**). Also, in one embodiment, pre-charge signal PRE is pre-charge signal PRE**1** provided on pre-charge line **210***a* to fire group **202***a*. In addition, in one embodiment, select signal SEL is select signal SEL**1** provided on select line **212***a* to fire group **202***a*.

To program memory element **403**, identification cell **400** receives enabling signaling, including pre-charge signal PRE, select signal SEL and data signals ~D**1**, ~D**2** and ~D**3** to turn on drive switch **406**. Identification line **402** provides the program signal in the identification signal ID to memory element **403**. The program signal provides a current through memory element **403** to the conducting drive switch **406** and reference **410**. The program signal changes the state of memory element **403** from the low resistive state to the high resistive state. In one embodiment, the program signal is a fourteen volt signal provided for one micro-second.

To read the state of memory element **403**, identification cell **400** receives enabling signaling, including pre-charge signal PRE, select signal SEL and data signals ~D**1**, ~D**2** and ~D**3** to turn on drive switch **405**. Identification line **402** provides the read signal in the identification signal ID to memory element **403**. The read signal provides a current through memory element **403** to the conducting drive switch **406** and reference **410**. The voltage on identification line **402** is determined to determine the resistive state of memory element **403**. In one embodiment, memory element **403** is determined to be in the high resistive state if the resistance is greater than about 1000 ohms and in the low resistive state if the resistance is less than about 400 ohms.

In operation, node capacitance **412** is pre-charged through pre-charge transistor **414** by providing a high level voltage pulse in pre-charge signal PRE on pre-charge line **418**. After charging node capacitance **412**, a data signal ~D**1** is provided on data line **428** to set the on/off state of first transistor **422**, data signal ~D**2** is provided on data line **430** to set the on/off state of second transistor **424** and data signal ~D**3** is provided on data line **432** to set the on/off state of third transistor **426**. After the high level voltage pulse in pre-charge signal PRE and after pre-charge signal PRE returns to a low voltage level, a high level voltage pulse is provided in select signal SEL on select line **420** to turn on select transistor **416**. Node capacitance **412** is actively discharged if at least one of the first, second, and third transistors **422**, **424** and **426** is turned on by one of the data signals ~D**1**, ~D**2** or ~D**3**, respectively. Alternatively, node capacitance **412** remains charged if first transistor **422**, second transistor **424** and third transistor **426** are turned off by data signals ~D**1**, ~D**2** or ~D**3**. A charged node capacitance **412** turns on drive switch **406** and memory element **403** can be programmed with a program signal and read with a read signal.

In one embodiment, the program signal and/or read signal are initiated while node capacitance **412** is actively discharged through select transistor **416** and at least one of the first, second and third transistors **422**, **424** and **426**. The high level voltage pulse in select signal SEL overlaps the start of the program signal and/or read signal on identification line **402**. Also, valid data signals ~D**1**, ~D**2** and ~D**3** overlap the start of the program signal and/or read signal on identification line **402**.

In one embodiment, node capacitance **412** is actively discharged through select transistor **416** and at least one of the first, second and third transistors **422**, **424** and **426** during the entire program signal and/or the entire read signal. The high level voltage pulse in select signal SEL overlaps the entire program signal and/or read signal on identification line **402**. Also, valid data signals ~D**1**, ~D**2** and ~D**3** overlap the entire program signal and/or read signal on identification line **402**. Actively discharging node capacitance **412** during at least the rise time of the program signal and/or the rise time of the read signal prevents node capacitance **412** from being inadvertently charged to turn on a drive switch **406**.

Identification cell **400** is selected and addressed for programming and reading if data signals ~D**1**, ~D**2** and ~D**3** are low and node capacitance **412** remains charged to turn on drive switch **406**. Identification cell **400** is not selected for programming or reading if at least one of the data signals ~D**1**, ~D**2** and ~D**3** are high and node capacitance **412** discharges to turn off drive switch **406**. The first, second and third transistors **422**, **424** and **426** comprise a decoder that controls the voltage level on node capacitance **412**.

In one embodiment, data signals ~D**1**, ~D**2** . . . ~D**8** provided on data lines **208***a*-**208***h* to fire groups **202***a*-**202***f* (shown in FIG. **7**) are provided to identification cells **400**, in printhead die **40**. With three of eight data signals ~D**1**, ~D**2** . . . ~D**8** selecting each identification cell **400** in a plurality of identification cells, up to fifty six different

identification cells can be selected by the eight data signals ~D**1**, ~D**2** . . . ~D**8**. The combination of the eight data signals ~D**1**, ~D**2** . . . ~D**8**, in reverse order, that, in one embodiment, are utilized to activate each individual identification cell **400**, are shown in the following Table I:

TABLE I

IDCell: ~D8—~D1
1: 11111000
2: 11110100
3: 11101100
4: 11011100
5: 10111100
6: 01111100
7: 11110010
8: 11101010
9: 11011010
10: 10111010
11: 01111010
12: 11100110
13: 11010110
14: 10110110
15: 01110110
16: 11001110
17: 10101110
18: 01101110
19: 10011110
20: 01011110
21: 00111110
22: 11110001
23: 11101001
24: 11011001
25: 10111001
26: 01111001
27: 11100101
28: 11010101
29: 10110101
30: 01110101
31: 11001101
32: 10101101
33: 01101101
34: 10011101
35: 01011101
36: 00111101
37: 11100011
38: 11010011
39: 10110011
40: 01110011
41: 11001011
42: 10101011
43: 01101011
44: 10011011
45: 01011011
46: 00111011
47: 11000111
48: 10100111
49: 01100111
50: 10010111
51: 01010111
52: 00110111
53: 10001111
54: 01001111
55: 00101111
56: 00011111

As can be seen from Table 1, each identification cell **400** can be individually enabled, and thereby can be programmed on an individual basis. Also, since the identification cells **400** can be read individually, the combinations utilized to store data are greatly increased. For example, a single identification cell **400** may be utilized in multiple combinations that each represents different information.

In one embodiment, printhead die **40** includes a precharge line, a select line, eight data lines, and an identification line coupled to fifty six identification cells. These eleven lines are used to control fifty six identification bits or about 5.1 identification cell bits per control line. In other embodiments, any suitable number of data signals can be provided to the identification cells. Also, in other embodiments, each identification cell can be configured to respond to any suitable number of data signals, such as two or four or more data signals. The uses for identification cells **400** can be similar to uses described for identification cells in this specification.

A plurality of identification cells, similar to identification cell **400**, in an example embodiment of printhead die **40**, store identification information indicating features of or other information about printhead die **40**. A printer employing such a printhead having identification cells can use this identification information to optimize printing quality in a variety of printing applications. Also, the printer can use this identification information for marketing purposes, such as regional marketing and original equipment manufacturer (OEM) marketing.

In one embodiment, selected identification cells store identification information indicating a thermal sense resistance value as determined at a selected temperature, such as 32 degrees centigrade. In this embodiment, a printhead includes a thermal sense resistor (TSR) that is read to provide a TSR value. The TSR is read and the obtained value is compared to the thermal sense resistance value stored in the identification cells to determine the temperature of the printhead. Printers can use this TSR information to optimize printing quality.

In one embodiment, selected identification cells store identification information indicating a printhead uniqueness number. The printer can use the printhead uniqueness number, along with other identification information, to identify and properly respond to the printhead.

In one embodiment, selected identification cells store identification information indicating an ink drop weight for a printhead. In one embodiment, the ink drop weight is indicated as an ink drop weight delta value or change from a selected nominal ink drop weight value.

In some embodiments, identification cells store identification information not only about the printhead die, but also about the inkjet cartridge or pen in which the printhead die is inserted. For example, in one embodiment, selected identification cells store identification information indicating an out of ink detection level for an inkjet cartridge. In one embodiment, a printer accounts for the drop weight values stored in selected identification cells and the out of ink detection level information stored in other selected identification cells to determine actual out of ink detection levels.

In one embodiment, one or more selected identification cells store identification information indicating which company sells a fluid ejection device. For example, one or more selected identification cells can store identification information indicating that the fluid ejection device is sold under a certain company's brand name or not sold under that certain company's brand name.

In one embodiment, selected identification cells store identification indicating a marketing region for the fluid ejection device. In one embodiment, selected identification cells store identification information indicating the seller of an OEM fluid ejection device. In one embodiment, selected identification cells in a printhead store identification indicating whether an OEM printer is unlocked. For example, the OEM printer can respond to the OEM unlocked information to unlock an OEM printer, such that the OEM printer can accept OEM printheads sold by a given company or group of companies and printheads sold by companies other

than the given company or group of companies, such as the actual original manufacturer company.

In one embodiment, selected identification cells store identification information indicating the product type and product revision of a fluid ejection device. The product type and product revision can be used by a printer to ascertain physical characteristics about a printhead. In one embodiment, product revision physical characteristics, such as spacing between nozzle columns, that may change in future products are stored in selected identification cells of a printhead. In this embodiment, the product revision physical characteristic information can be used by the printer to adjust for the physical characteristic changes between product revisions.

It should be noted that while FIG. **9** discloses utilizing a single identification line **402** that is coupled to each of the identification cells **400**, e.g. 56 identification cells, more than one identification line **400** may be utilized. Also, the number of identification cells that are provided may be more or less than 56 depending of factors such as the size of the die, the operating parameters of the fluid ejection device, or other considerations. Also, the number of identification cells that are encoded with information may be less than the total number of identification cells on the die.

Also, the memory element **403** may be encoded with multiple bits of information. In such an instance, different ranges of resistance may be utilized to represent each bit. An example of a system and method for encoding a memory element with multiple bits of information is depicted and disclosed in co-pending U.S. patent application Ser. No. 10/778,415, which is incorporated herein by reference in its entirety.

FIG. **10** is a diagram illustrating one embodiment of a portion of a printhead die **40**. The printhead die **40** includes an identification signal input pad **702**, a data line input pad **704** and a fire line input pad **706**. The identification signal input pad **702**, data line input pad **704** and fire line input pad **706** are formed as part of the second metal layer of printhead die **40**. The identification signal input pad **702** is electrically coupled to identification line **708** that is electrically coupled to identification cells such as identification cell **400**, or other identification elements, in printhead die **40**. The data line input pad **704** is electrically coupled to data line **710** that is electrically coupled to firing cells **120** in printhead die **40**. The fire line input pad **706** is electrically coupled to fire line **712** that is electrically coupled to firing cells **120** in printhead die **40**.

The identification line **708** includes second metal layer portions **708***a*-**708***c* and first metal layer portions **708***d* and **708***e*. The second metal layer is isolated from the first metal layer by an isolation layer. Contact is made between second metal layer portions **708***a*-**708***c* and first metal layer portions **708***d* and **708***e* through vias **714***a*-**714***d*. Second metal layer portion **708***a* is electrically coupled to first metal layer portion **708***d* through via **714***a*. The first metal layer portion **708***d* is electrically coupled to second metal layer portion **708***b* through via **714***b*. The second metal layer portion **708***b* is electrically coupled to first metal layer portion **708***e* through via **714***c*, and first metal layer portion **708***e* is electrically coupled to second metal layer portion **708***c* through via **714***d*.

The data line **710** is formed as part of the second metal layer and disposed over first metal layer portion **708***e* of identification line **708**. Fire line **712** is formed as part of the second metal layer and disposed over first metal layer portion **708***d* of identification line **708**. The first metal layer is isolated from the second metal layer by the isolation layer and identification line **708** is isolated from data line **710** and from fire line **712**. The data line **710** receives data signal DATA and provides data signal DATA to firing cells **120**. Fire line **712** receives fire signal FIRE and provides fire signal FIRE to firing cells **120** in printhead die **40**.

The second metal layer portion **708***a* includes an elongated finger portion, indicated at **720**, that is situated next to fire line input pad **706**, and second metal layer portion **708***b* includes an elongated finger portion, indicated at **722**, that is situated next to data line input pad **704**. Identification line **708** receives identification signal ID and provides identification signal ID to identification cells, such as identification cell **400**, or other identification elements in printhead die **40**. Also, identification line **708** receives a short detection signal in identification signal ID. The short detection signal is used to detect fluid short circuits, such as ink short circuits, between data line input pad **704** and finger portion **722**, and between fire line input pad **706** and finger portion **720**.

To detect a short circuit between data line input pad **704** and finger portion **722**, probes are positioned on identification signal input pad **702** and data line input pad **704**. The short detection signal is provided to identification signal input pad **702** and ground is provided at data line input pad **704**. A short circuit is detected as a low voltage level on identification signal input pad **702**. To detect a short circuit between fire line input pad **706** and finger portion **720**, probes are positioned on identification signal input pad **702** and fire line input pad **706**. The short detection signal is provided to identification signal input pad **702** and ground is provided at fire line input pad **704**. A short circuit is detected as a low voltage level on identification signal input pad **702**. This short circuit detection test can be used for each input pad that has identification line **708** situated next to it. The short circuit detection test is used as a substitute for detecting ink shorts between input pads, such as data line input pad **704** and fire line input pad **706**. In one embodiment, signal input pads **702**, **704** and **706** have a pad width WP of 125 microns and between pad spacing WBP of 50 microns. The spacing between finger portion **722** and data line input pad **704** at WIDS is 10 microns, and the spacing between finger portion **720** and fire line input pad **706** is 10 microns.

Examples of other identification elements or identification cells that may be utilized with layouts of identification signal input pad **702**, data line input pad **704** and fire line input pad **706** are depicted and disclosed in co-pending U.S. patent application Ser. No. 09/967,028 and U.S. Pat. No. 5,363,134 both of which are incorporated by reference herein in their entirety.

FIG. **11** is a flow chart illustrating one embodiment of a manufacturing process employing selected identification cells in certain embodiments of printhead die **40**. In certain embodiments of printhead die **40**, the operating speed is dependent on the time it takes to charge and discharge internal circuit nodes. These charge and discharge times are dependent on the speed of the silicon and may vary from one printhead die **40** to the next due to slight differences in the properties of the substrate from which the printhead die **40** is formed. By characterizing the speed of a printhead die **40** and encoding the speed on the printhead die **40**, after testing, applications can use some printhead die **40** in higher performance applications and other printhead die **40** in lower performance applications.

In a printhead die **40** including pre-charged firing cells **120** in a firing cell array similar to firing cell array **200** illustrated in FIG. **7**, fire signals FIRE**1**, FIRE **2** . . . FIRE**6** include energy pulses that overlap as illustrated in the timing diagram of FIG. **8**. The operating speed of printhead die **40**

may be dependent on the time it takes to charge and discharge address lines **144** and **146** for selecting and deselecting firing cells **120**, the time it takes to discharge node capacitance **126** through select transistor **130** before an energy pulse is provided in fire signal FIRE, and the time it takes to precharge node capacitance **126**.

At **800**, timing parameters of printhead die **40** that include pre-charged firing cells **120** in firing cell arrays similar to firing cell array **200** are characterized in testing of the printhead die **40**. In each characterized printhead die **40**, the characterized timing parameters include charge and discharge times of one or more address lines, such as address lines **144** and **146**. Also, in each characterized printhead die **40**, the characterized timing parameters include the discharge time of one or more node capacitances **126**. The timing characteristics of each characterized printhead die **40** are categorized into a designated speed category.

At **802**, the designated speed category of a characterized printhead die **40** is programmed into selected identification cells in the characterized printhead die **40**. The identification cells in the characterized printhead die **40** are similar to identification cell **400** illustrated in FIG. **9**. The selected identification cells **400** in each characterized printhead die **40** can be read at **804** and the printhead die **40** are sorted based on the speed performance category.

At **806**, printhead die **40** that are categorized into higher speed performance categories are implemented in printers having higher performance print modes. At **808**, printhead die **40** that are categorized into lower speed performance categories are implemented in lower performance printers, such as lower cost printers that do not include the higher performance print modes of the higher performance printers.

The operating speed of other embodiments of printhead die **40** may also be dependent on the time it takes to charge and discharge internal circuit nodes. For example, in one embodiment where dynamic firing cells are first discharged, the operating time may be dependent on the time it takes to charge the gate of the drive switch, instead of the time it takes to discharge the gate of the drive switch.

Although specific embodiments have been illustrated and described herein, it will be appreciated by those of ordinary skill in the art that a variety of alternate and/or equivalent implementations may be substituted for the specific embodiments shown and described without departing from the scope of the present invention. This application is intended to cover any adaptations or variations of the specific embodiments discussed herein. Therefore, it is intended that this invention be limited only by the claims and the equivalents thereof.

What is claimed is:

1. A fluid ejection device comprising:

an identification line; and

identification cells electrically coupled to the identification line, wherein each of the identification cells comprises a memory circuit and a memory element, wherein each memory circuit is adapted to receive and respond to signals to selectively store a value in the memory circuit, wherein the value determines whether the identification cell is responsive to signals received on the identification line to perform at least one of the following:

read the memory element; and

program the memory element.

2. The fluid ejection device of claim **1**, wherein the memory element comprises a fuse coupled to the identification line.

3. The fluid ejection device of claim **2**, wherein the memory element is in a first state if a resistance of the memory element is greater than 1000 ohms and the memory element is in a second state if the resistance of the memory element is less than 400 ohms.

4. The fluid ejection device of claim **1**, wherein the memory element is configured to conduct current supplied on the identification line to determine a state of the memory element.

5. The fluid ejection device of claim **1**, wherein the memory circuit comprises a switch coupled to the memory element, wherein a state of the switch is controlled by the value.

6. The fluid ejection device of claim **5**, wherein the switch is configured to be turned on by the value to program the memory element and to read a state of the memory element.

7. The fluid ejection device of claim **1**, wherein a program signal provided on the identification line to program the memory element comprises a pulse having a voltage level of approximately fourteen volts and a pulse width of approximately one microsecond in length.

8. The fluid ejection device of claim **1**, wherein the memory circuit is a dynamic memory circuit.

9. The fluid ejection device of claim **1**, further comprising data lines, wherein each of the identification cells is configured to receive at least one of the signals on at least two corresponding data lines.

10. The fluid ejection device of claim **9**, wherein each identification cell comprises at least one transistor each of which is coupled to a corresponding one of the at least two data lines.

11. The fluid ejection device of claim **1**, comprising:

a first line adapted to receive a first signal;

a second line adapted to receive a second signal; and

a third line adapted to receive a third signal, wherein at least one of the identification cells is configured to receive and respond to the first signal, the second signal, and the third signal to change the value.

12. The fluid ejection device of claim **1**, comprising:

a first line adapted to receive a first signal, wherein each of the identification cells comprises:

a switch comprising a control input; and

a first transistor configured to receive the first signal to charge the control input.

13. The fluid ejection device of claim **12**, comprising:

a second line adapted to receive a second signal; and

a third line adapted to receive a third signal, wherein each of the identification cells comprises:

a second transistor configured to receive the second signal; and

a third transistor configured to receive the third signal, wherein the second transistor and the third transistor are controlled to selectively discharge the control input.

14. The fluid ejection device of claim **13**, comprising:

a fourth line adapted to receive a fourth signal, wherein the one of the identification cells comprises:

a fourth transistor configured to receive the fourth signal, wherein the second transistor and the fourth transistor are controlled to selectively discharge the control input.

15. The fluid ejection device of claim **14**, comprising:

a fifth line adapted to receive a fifth signal, wherein the one of the identification cells comprises:

a fifth transistor configured to receive the fifth signal, wherein the second transistor and the fifth transistor are controlled to selectively discharge the control input.

16. The fluid ejection device of claim **1**, wherein the signals comprise enabling signaling that comprises:

a first signal comprising a first pulse employed to pre-charge the one of the identification cells; and

a second signal comprising a second pulse employed to selectively discharge the one of the identification cells.

17. The fluid ejection device of claim **16**, wherein the first pulse and the second pulse are non-overlapping pulses.

18. The fluid ejection device of claim **16**, wherein the second pulse overlaps at least the initiation of a program signal.

19. The fluid ejection device of claim **16**, wherein the second pulse overlaps at least the initiation of a read signal.

20. The fluid ejection device of claim **1**, wherein at least one of the identification cells stores identification information that indicates a manufacturer of the fluid ejection device.

21. The fluid ejection device of claim **1**, wherein at least one of the identification cells stores identification information that indicates a product type.

22. The fluid ejection device of claim **1**, wherein at least one of the identification cells stores identification information that indicates an out of ink detection level for the fluid ejection device.

23. The fluid ejection device of claim **1**, wherein at least one of the identification cells stores identification information that indicates product version information.

24. The fluid ejection device of claim **1**, wherein at least one of the identification cells stores identification information that indicates a thermal sense resistance value for the fluid ejection device.

25. The fluid ejection device of claim **1**, wherein at least one of the identification cells stores identification information that indicates a uniqueness number.

26. The fluid ejection device of claim **1**, wherein at least one of the identification cells stores identification information that indicates a drop weight delta value.

27. The fluid ejection device of claim **1**, wherein at least one of the identification cells stores identification information that indicates whether an original equipment manufacturer printer is unlocked.

28. The fluid ejection device of claim **1**, wherein at least one of the identification cells stores identification information that indicates a seller of an original equipment manufacturer fluid ejection device.

29. The fluid ejection device of claim **1**, further comprising input pads, wherein the identification line is configured to detect ink shorts between each of the input pads and the identification line.

30. The fluid ejection device of claim **1**, further comprising input pads, wherein the identification line is disposed adjacent the input pads and spaced apart from the input pads.

31. The fluid ejection device of claim **1**, comprising signal lines configured to provide enabling signal, wherein a ratio of the number of identification cells to the number of signal lines plus the identification line is greater than one.

32. The fluid ejection device of claim **1**, comprising signal lines configured to provide enabling signal, wherein a ratio of the number of identification cells to the number of signal lines plus the identification line is greater than 1.5.

33. The fluid ejection device of claim **1**, comprising signal lines configured to provide enabling signal, wherein a ratio of the number of identification cells to the number of signal lines plus the identification line is greater than two.

34. The fluid ejection device of claim **1**, comprising signal lines configured to provide enabling signal, wherein a ratio of the number of identification cells to the number of signal lines plus the identification line is greater than four.

35. A method of programming a fluid ejection device, comprising:

receiving a program signal;

receiving enabling signaling at an identification cell;

responding to the received enabling signaling to provide an enabling value; and

storing the enabling value that selectively enables the identification cell to be programmed via the program signal.

36. The method of claim **35**, comprising responding to the program signal to store identification information.

37. The method of claim **36**, wherein responding to the received enabling signaling comprises:

pre-charging the identification cell; and

discharging the identification cell selectively.

38. The method of claim **36**, wherein responding to the received enabling signaling comprises:

discharging the identification cell; and

charging the identification cell selectively.

39. The method of claim **36**, wherein receiving enabling signaling comprises receiving enabling signaling and data signals representing an image on data lines.

40. The method of claim **36**, wherein receiving enabling signaling comprises receiving three signals and responding to the received enabling signaling comprises:

responding to the three signals being in a first state to enable the identification cell; and

responding to at least one of the three signals being in a second state to disable the identification cell.

41. A method of reading a fluid ejection device, comprising:

receiving a read signal;

receiving enabling signaling at an identification cell;

responding to the received enabling signaling to provide an enabling value; and

storing the enabling value that selectively enables the identification cell to be read via the read signal.

42. The method of claim **41**, wherein responding to the received enabling signaling comprises:

pre-charging the identification cell; and

discharging the identification cell selectively.

43. The method of claim **41**, wherein responding to the received enabling signaling comprises:

discharging the identification cell; and

charging the identification cell selectively.

44. The method of claim **41** wherein receiving enabling signaling comprises receiving enabling signaling and data signals representing an image on data lines.

45. The method of claim **41**, wherein receiving enabling signaling comprises receiving three signals and responding to the received enabling signaling comprises:

responding to the three signals being in a first state to enable the identification cell; and

responding to at least one of the three signals being in a second state to disable the identification cell.

46. A fluid ejection device comprising:

an identification line; and

a plurality of cells, each comprising:

a memory element coupled to the identification line;

a first switch coupled to the memory element, wherein the switch in a stored charged state allows the memory element to respond to signals received on the identification line; and

second switch coupled with first switch, the second switch discharging the stored charge state of the first

switch to prevent the memory element from responding to the signals received on the identification line.

47. The fluid ejection device of claim **46**, wherein each memory element comprises a fuse coupled to the identification line.

48. The fluid ejection device of claim **46**, further comprising a first line adapted to receive a first signal and wherein each cell comprises a third switch configured to receive the first signal to charge the first switch to allow the memory element to respond to signals received on the identification line.

49. The fluid ejection device of claim **48**, further comprising a second line adapted to receive a second signal and a third line adapted to receive a third signal, wherein each of the cells comprises:

a fourth switch configured to receive the second signal; and

a fifth switch configured to receive the third signal, wherein the fourth switch and the fifth switch are controlled to selectively discharge the stored charge state of the first switch.

50. The fluid ejection device of claim **46**, comprising signal lines configured to provide enabling signal, wherein a ratio of the number of cells to the number of signal lines plus the identification line is greater than one.

51. The fluid ejection device of claim **46**, comprising signal lines configured to provide enabling signal, wherein a ratio of the number of cells to the number of signal lines plus the identification line is greater than 1.5.

52. The fluid ejection device of claim **46**, comprising signal lines configured to provide enabling signal, wherein a ratio of the number of cells to the number of signal lines plus the identification line is greater than two.

53. The fluid ejection device of claim **46**, comprising signal lines configured to provide enabling signal, wherein a ratio of the number of cells to the number of signal lines plus the identification line is greater than four.

* * * * *

UNITED STATES PATENT AND TRADEMARK OFFICE

CERTIFICATE OF CORRECTION

PATENT NO. : 7,278,703 B2
APPLICATION NO. : 10/827135
DATED : October 9, 2007
INVENTOR(S) : Trudy L. Benjamin et al.

It is certified that error appears in the above-identified patent and that said Letters Patent is hereby corrected as shown below:

In column 11, line 8, delete “RE2” and insert -- PRE2 --, therefor.

In column 13, line 13, delete “tine” and insert -- line --, therefor.

In column 24, line 63, in Claim 46, insert -- first -- before “switch”.

In column 24, line 65, in Claim 46, after “and” insert -- a --.

In column 24, line 66, in Claim 46, delete “with” and insert -- to the --, therefor.

In column 25, line 9, in Claim 48, insert -- the stored charge state to -- before “allow”.

In column 25, line 10, in Claim 48, insert -- the -- before “signals”.

Signed and Sealed this

Seventh Day of July, 2009

John Doll

JOHN DOLL
Acting Director of the United States Patent and Trademark Office