INKJET TECHNOLOGY
and
Product Development Strategies

Stephen F. Pond, Ph.D.

TORREY PINES
RESEARCH

PENGAD 800-631-6989
DEPOSITION EXHIBIT
Pond 6
10-10-23

Published by

TORREY PINES
RESEARCH

6359 Paseo Del Lago
Carlsbad, California
(760) 929-4800
www.tpr.com

Specializing in product and technology development for
digital imaging systems using inkjet and electrophotographic technologies

© 2000 Torrey Pines Research. All rights reserved. No portion of this book may be reproduced by any means without the express permission in writing of the publisher.

Printed and bound in the United States of America.

This book is available by contacting Torrey Pines Research at +760-929-4800.

This book is based on information that is believed to be reliable and accurate. Torrey Pines Research and the authors cannot guarantee its accuracy or completeness, be, or become liable for, possible errors of facts, interpretation, or omissions.

All registered trademarks remain the sole property of their respective owners.

ACKNOWLEDGEMENTS:

Stephen F. Pond for his time, dedication, and diligence in writing this book.

We wish to acknowledge the assistance of the scientists at American Ink Jet Corporation (AIJ), in writing chapter 5, "Ink Design." Established in Billerica, MA, in 1983, AIJ is one of the largest independent developers and manufacturers of water-based inkjet inks in the world. Utilizing dyes or pigments, the company manufacturers both standard and archival inks and works with printer manufacturers, print-head developers and media coaters to develop optimum solutions.

Gary Swager for initiating the project and for his editing of the original manuscript.

Peter Mason and Greg Shires for their technical review and editing.

COVER DESIGN AND ILLUSTRATION: Abacus Graphics, Oceanside, CA, with contributions by Becky Colgan.

EDITORIAL REVIEW, GRAPHIC DESIGN AND PRODUCTION: Becky Colgan, Communication Strategies

PROJECT MANAGEMENT: Pamela Kay Martin

volume is needed, the area and length of the heater surface for a 100 pL drop would be:

$$A_{heater} \approx \frac{2V_{drop}}{D_{wall}} = \frac{2x10^{-7}cm^3}{(20) \times 10^{-4}cm}$$

$$A_{heater} \approx (1 \times 10^{-4})cm^2 = 1 \times 10^4 \mu m^2$$

$$L_{heater} \approx \frac{1x10^4\ \mu m^2}{40\ \mu m} = 250\mu m$$

A_{heater} = 10,000 μm² and the picture element itself for a 300-dpi raster is (85 μm)² = 7,225 μm². For TIJ, the drop generating transducer is about the same size as the pixel. This result holds true for 600-dpi rasters as well. TIJ printheads, with hundreds of jets on single pixel centers, can be fabricated that write a full swath of 600-dpi image in a single pass of the printhead.

The scoping of the heater area size above is an order of magnitude calculation. Commercial designs can be much more efficient or somewhat less efficient. There are many variables involved. A certain volume of ink must be superheated before the film boiling commences. The thermal conductivity of the layers in between the ink and the actual resistor influences how quickly heat energy will transfer into the ink. Ink constituents may impose a maximum allowed temperature on the heater surface before degradation products cause failure modes. The intimate electronics transistor driver choice may dictate a certain voltage/current regime for the resistor. The resistor shape will influence refill characteristics. The routing of address leads may constrain one dimension over another. Fortunately, the fabrication technology available allows almost any resistor design to be executed. So the design is usually selected to minimize refill times and electrical energy.

Other major TIJ device design considerations are indicated in figure 4.18. This sketch is for an *edgeshooter* configuration. The other common TIJ printhead layout is the *roofshooter*, depicted in figure 4.19 of the subsection below. These two device architectures will be discussed separately because the layout differences lead to some issues that are unique to each approach. All TIJ device designs address the points noted in figure 4.18. Heater passivation, including the protection of the leads is critical to the service life of the device.

Depending on the application, a *life-of-the-machine* jet may need to last for 10^7 to 10^{10} drop firings. The violence of the bubble collapse and the chemical migration of atoms from the ink into the heater passivation materials are operational realities. They must be counteracted by exceptional materials innovation and attention to every design detail near the heater. Even small, 1 μm, steps in one coating over another may need to be purposefully tapered to prevent mechanical damage from the fluid during bubble collapse.[28] Protective layer grain structure and grain boundary chemistry is significant.[29] Over the last two decades TIJ manufacturers have steadily improved heater lifetime so that some products are planned on the basis that 10^9 pulses are expected before first jet failure in an array of several hundred jets. Drop firing lifetimes of 10^{10} are likely to be feasible, especially if the TIJ device cost target could tolerate a somewhat more complex set of passivation layers.

The two regions denoted *front channel area* and *rear channel area* are critical to several performance attributes. The entire drop generator part of the TIJ device depicted in figure 4.18 will be only 200 μm to 400 μm long. After a pressure impulse from the bubble explosion, the drop velocity, volume, and repetition frequency will depend on the volume of fluid and flow restrictions encountered going forward to the nozzle versus rearward to the ink supply. Fast refill, high drop frequency is assisted by low resistance to the rear. However, high resistance to the rear is best for large drop volume and high drop velocity.

ANNOTATED 10/3/2023 SFP

A front channel shape that quickly enlarges in cross-sectional area moving inward helps maintain

[28] Burke, et al., "Thermal inkjet printhead heater design and its effect on heater lifetime," in *Recent Progress in Ink Jet Technologies,* I. Rezanka, R. Eschbach, editors, IS&T, 150 (1996).

[29] Skumanich, et al., "Material characteristics of sputtered Ta and TaAl thin films used in TIJ devices," in *Recent Progress in Ink Jet Technologies,* I. Rezanka, R. Eschbach, editors, IS&T, 150 (1996).

©2000 Torrey Pines Research. All rights reserved.

Canon U.S.A. Ex. 1030 - Page 3
Canon U.S.A., Inc., and Canon Inc. v. Slingshot Printing, LLC
IPR2023-00312 - U.S. Patent No. 7,484,823

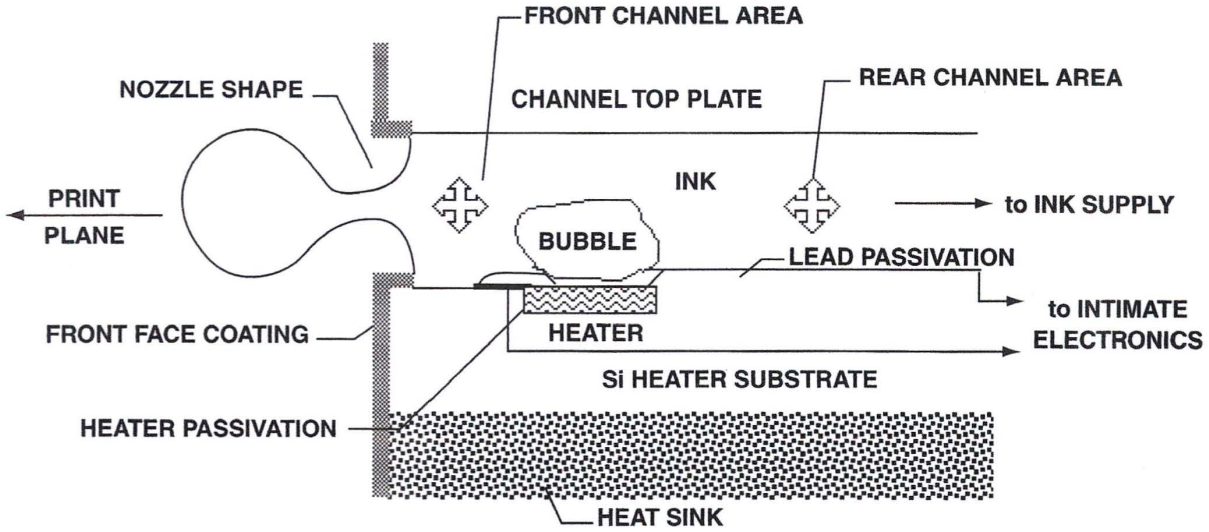

Figure 4.18—The major design issues for a TIJ device. An edgeshooter configuration is depicted. Most issues are the same for roofshooters. The differences are discussed in the text.

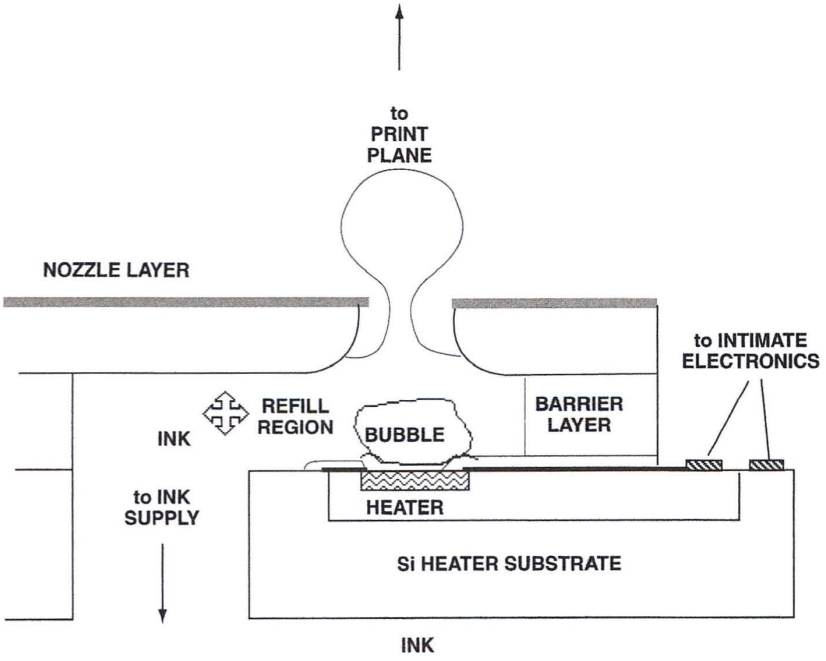

Figure 4.19—A schematic roofshooter. Ink enters from behind the silicon heater substrate, passes laterally into a small chamber with the heater at the floor, and is ejected from the *roof*. In use, device operation does not depend on gravity, up or down, and usually shoots down in spite of the term "roofshooter."

©2000 Torrey Pines Research. All rights reserved.

Canon U.S.A. Ex. 1030 - Page 4
Canon U.S.A., Inc., and Canon Inc. v. Slingshot Printing, LLC
IPR2023-00312 - U.S. Patent No. 7,484,823

roofshooters are elaborated upon. Fabrication processes that are unique for the two configurations are also mentioned. It is not clear whether one configuration is inherently superior to the other. Almost every advantage that has been developed within one configuration has had a corresponding approach in the other. In the 1980s, it appeared that edgeshooters would be superior for the largest arrays, i.e., over 0.5" and above 300 jets/inch. Roofshooters appeared capable of higher drop repetition frequencies and better waste heat management. Today, engineering solutions have been found which allow each configuration to achieve comparable drop generator performance. The preference of some vendors for edgeshooters (Canon and Xerox) and of others for roofshooters (HP, Olivetti, and Lexmark) is mostly driven by the inertia of the accumulated know-how. Learning the intricate details of the design optimization process and the methods and materials of the unique manufacturing processes requires a large investment for either approach.

4.4.1 Roofshooter designs

The basics of the roofshooter configuration are illustrated in figure 4.19 (side view) and figure 4.20 (top view). The drop generation chamber is usually a three-side space with an inlet to the ink supply on a fourth side. The depicted structure is formed using three layers: heater substrate, barrier layer, and nozzle membrane. The height of the chamber is established by the thickness of the barrier layer, usually a permanent photoresist layer ~ (25–40) µm. The nozzle membrane is fabricated separately, aligned, and bonded to the barrier material. Initially nickel electroforming was the method of choice for nozzle membranes.[31] Excimer laser ablation of polyimide films has been developed[32,33] as a more reliable alternative. The silicon heater substrate is mounted to a printhead support of some kind, which may or may not include a metallic heat sink. The device support isn't illustrated in figure 4.19.

The TIJ heater resistors are on the surface of the silicon substrate that also carries the barrier layer and nozzle. These layers are windowed or stopped short of the silicon substrate perimeter for access to the electrical leads to activate the device. This has important consequences to overall printhead design and feasible electrical interconnect manufacturing processes. The electrical interconnection method cannot be allowed to intrude on the space between the printhead front face and the print plane.

Narrowing the flight distance is the only engineering solution that can compensate for misdirection from the nozzles. Typical printhead-to-paper distances are engineered to ~1.1 mm. Every ±100 µm of distance change then adds or subtracts 10% of the misdirection pixel placement error. It is highly desirable to move as close as permitted by substrate topography and thickness (e.g., paper cockle, envelope seams). This means that tape-automated-bonding (TAB) is the only practical technology[34] to use to attach to the output pads on the silicon substrate. All roofshooters use TAB interconnect. The use of TAB with its flexible conductor-on-polyimide material package also allows the interconnection back to the printer to be routed to a more convenient printhead surface. The consequence is that the roofshooter TIJ wafer bonding pads have to be *bumped* for TAB. Within the overall TIJ printhead manufacturing sequence, the lead attach step has to be done when the silicon substrate can still be supported properly for ultrasonic thermobonding.

The barrier layer pattern[35] will carry a significant amount of the fluid path geometry responsible for drop generation performance, especially refill. The material used must be photo patterned and

[31] E. Kenworthy, "Solid metal orifice plate for a jet drop recorder," U.S. Patent 4,184,925, issued 1/22/1980.

[32] Asakawa, et al., "Method for forming tapered inkjet nozzles," U.S. Patent 5,417, 897, issued 5/23/1995.

[33] Schantz, et al., "Excimer laser-ablated components for inkjet printhead," U.S. Patent 5,305,018, issued 4/19/1994.

[34] G. Hanson, "Replaceable thermal inkjet component and thermosonic beam bonding process for fabricating same," U. S. Patent 4,635,073, issued 1/6/1987.

[35] Moritz, et al., "Tuned entrance fang configuration for ink-jet printers," U.S. Patent 5,519,423, issued 5/21/1996.

©2000 Torrey Pines Research. All rights reserved.

Canon U.S.A. Ex. 1030 - Page 5
Canon U.S.A., Inc., and Canon Inc. v. Slingshot Printing, LLC
IPR2023-00312 - U.S. Patent No. 7,484,823

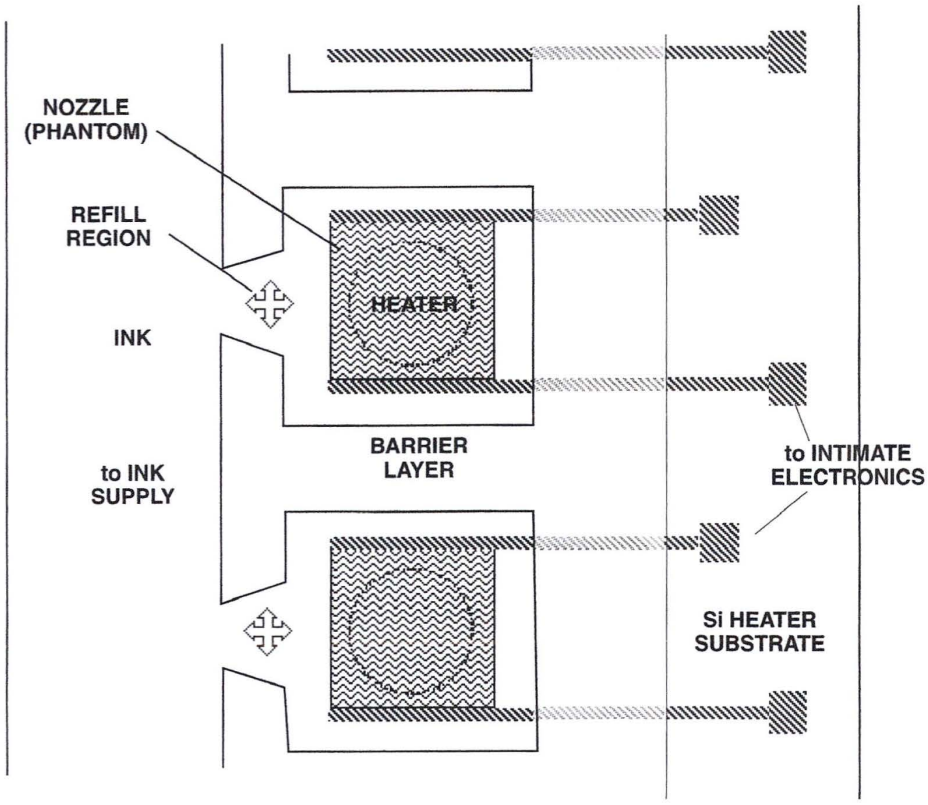

Figure 4.20—A schematic roofshooter in top view. The barrier layer features are depicted showing the ink refill path to the left of each heater. Nozzles are indicated as dashed lines. Drops fire out of the page.

bonded to both the heater substrate and the nozzle member, and be compatible with the ink chemistry. As jet density and drop repetition frequency are both pushed to limits, the dimensional accuracy and aspect ratio (height to length) which can be achieved by a candidate material becomes an important factor. HP and Dupont developed a new barrier layer material[36] to achieve the 85 μm jet spacing required for HP's 600 dpi black ink printheads. Many roofshooter printheads employ proprietary material formulations for the barrier layer.

[36] Burke, et al., "Inkjet printhead with tuned firing chambers and multiple inlets," U. S. Patent 5,666,143, issued 9/9/1997.

Nozzle membrane materials and shapes have been investigated by inkjet technologists for the past thirty years. For many years the most successful multinozzle membranes were achieved using spot-overgrowth, nickel electroforming, followed by noble metal coating. This process creates a distinctive half circle nozzle bore shape as depicted in figure 4.19. The production of troublesome satellite drops may be exacerbated by this nozzle shape when operated with the largest bore side inward, as shown. The nickel electroform must be well protected from ink corrosion by pinhole-free coatings, which are difficult to fabricate, so that the nozzle front face is also hydrophobic. Finally, a nickel layer has a much larger thermal expansion coefficient than does the silicon heater substrate.

©2000 Torrey Pines Research. All rights reserved.

Canon U.S.A. Ex. 1030 - Page 6
Canon U.S.A., Inc., and Canon Inc. v. Slingshot Printing, LLC
IPR2023-00312 - U.S. Patent No. 7,484,823

As longer arrays of jets are attempted, this mismatch in thermal expansion makes it difficult to use adequate thermal cycles to cure necessary adhesives and sealants. This was an important limitation on roofshooter arrays, since they rely on a nozzle membrane. However, several roofshooter manufacturers have developed commercially successful polyimide nozzle membrane films using an excimer laser to ablate the nozzle shape. The films can be prepared with hydrophobic coating before the ablation of the nozzles. Polyimide films follow the thermal excursions of the silicon heater substrate, removing the difficulties of fabricating long arrays.

The ink supply for a roofshooter enters from beneath the heater surface. Logistically this is necessary because there would not be space for an ink connector to enter from the nozzle side of the device. If it did, it would intrude into the precious printhead-to-paper space. Figure 4.19 shows the ink flowing from behind and around an edge of the silicon heater substrate. Having the ink flow behind the heater substrate, especially in close proximity to the heater resistors themselves, is very beneficial for promoting waste heat transfer to ink, which will soon be jetted. This nearby ink soaks up a significant amount of the waste heat. If heavy printing continues, it will soon eject from the printhead carrying the waste heat out onto the substrate. If printing stops or pauses, then heat will have time to diffuse throughout the entire ink supply, helping to cool the immediate vicinity of the heaters.

Roofshooter configurations can be so favorable to ink-assisted heat management that some can print solid black continuously for the entire ink supply without overheating. The HP DeskJet printhead, operating at 5 KHz drop rate, can print its full 35cc ink supply without pausing. It is more difficult in an edgeshooter design to bring the incoming ink into equivalent proximity to the heater row.

For a decade of roofshooter devices, the heater substrate edge shown in figure 4.19 was formed as a narrow slot all the way through the heater substrate. Two rows of interdigitated jets could then be formed, one row on each side of the slot, to achieve the total jet/inch density needed. This slot was formed after the microelectronic device processes, usually by sand blasting through a whole-wafer mask. The accuracy by which the edge of the slot can be placed relative to the row of drop generator chambers then becomes an important design variable for refill. The sandblasting method has been acceptable for fabricating jets at 150/inch, i.e., a scale of 170 µm. To push designs to 300 jets/inch or higher, a more accurate slot-forming technology is needed. Orientation-dependent etching (ODE) of silicon is one such method.[37]

Hewlett-Packard has developed an alternate design that eliminates the slots in favor of using the edges of the silicon heater substrate. Figure 4.21 shows this layout.[38] Instead of needing to accurately form a slot in good registration to the heater resistor row, an edge must be cut with precise registration. Dicing equipment has been developed for cutting magnetic disk drive heads that is capable of positioning and cutting to accuracies of a few microns. With modified process parameters and special blades, these saws can produce the TIJ heater substrate edges needed for 300 jets/inch devices.[39]

An additional benefit of the edge-feed design is a smaller TIJ silicon die size for a given number of jets. Reduced die size helps reduce cost/jet both by increasing the number of devices/wafer and by increasing the yield of good die sites. Elimination of the slot-forming process also reduces processing costs and accidental loss of the completed TIJ microelectronic wafers.

The execution of the design illustrated in figure 4.21 requires very sophisticated fabrication of the nozzle membrane and the assembly of the heater substrate to the nozzle membrane. The design makes the further step of integrating the TAB electrical connections with the nozzle membrane material and routing these leads to the shortest edge of the device. The leads can be routed to the short edge of the

[37] Drake, et al., "Thermal inkjet printhead fabricating process," U.S. Patent 4,789,425, issued 12/6/1988.

[38] Keefe, et al., "Inkjet printhead," U.S. Patent 5,420,627, issued 5/30/1995.

[39] Altavela, et al., "Two-step dicing process to form an inkjet face," U.S. Patent 5,408,739 issued 4/25/1995.

©2000 Torrey Pines Research. All rights reserved.

Canon U.S.A. Ex. 1030 - Page 7
Canon U.S.A., Inc., and Canon Inc. v. Slingshot Printing, LLC
IPR2023-00312 - U.S. Patent No. 7,484,823

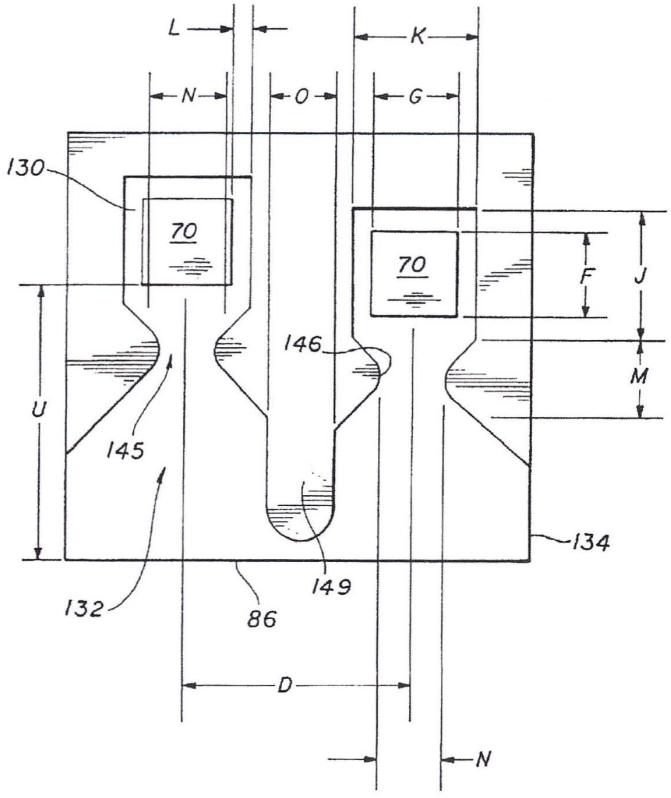

Figure 9.7—An illustration of the geometrical parameters that are controlled to achieve reliable 20 KHz drop repetition using an HP edge-fed roofshooter TIJ device. Two adjacent drop generator chambers are seen in top view with the nozzle plate removed. Ink is fed from below, up and over the device edge noted as element #86. One of the most important dimensions is the *shelf length*, U. This is the length of the constricted ink refill path. When the shelf length is made ~ 55 μm, the ink surface tension is ~ 54 dyne-cm and the viscosity is ~ 3 cpoise, the drops for 600-dpi printing can be reliably produced at 20 KHz. From U.S. Patent 5,946,012, issued 8/31/1999.

by Canon. Since 1981, Canon has demonstrated several two-color and four-color page-wide TIJ printers having 8"-wide printheads with 200 and 400 jets/inch. Nonpublic page-wide systems are known to have been operated by IBM (CIJ), Domino (CIJ), Xerox (CIJ and TIJ), and Hewlett-Packard (TIJ).[13]

Page-wide inkjet has not been a mainstream commercial success primarily because the print quality has not yet been acceptable. The market for page-wide print speed is served today by offset lithography and laser xerography. Both processes achieve print quality on plain papers that inkjet has not been able to match with single-pass printing. In addition, the applications served require extensive paper handling, including duplex paper paths, collators, inserters, et cetera. Inkjet-imaged paper is often distorted by curl and cockle. Duplex imaging on plain paper is hampered by ink show-through.

[13] See page-wide array concepts of these vendors in figures 2.6,2.11, 4.8, 4.29,4.30, 4.31, 8.10, and 8.26.

©2000 Torrey Pines Research. All rights reserved.

Canon U.S.A. Ex. 1030 - Page 8
Canon U.S.A., Inc., and Canon Inc. v. Slingshot Printing, LLC
IPR2023-00312 - U.S. Patent No. 7,484,823