US006612673B1

(12) **United States Patent**
Giere et al.

(10) **Patent No.: US 6,612,673 B1**
(45) **Date of Patent: Sep. 2, 2003**

(54) **SYSTEM AND METHOD FOR PREDICTING DYNAMIC THERMAL CONDITIONS OF AN INKJET PRINTING SYSTEM**

(75) Inventors: **Matthew Giere**, San Diego, CA (US); **Satya Prakash**, Poway, CA (US); **Ronald A. Askeland**, San Diego, CA (US)

(73) Assignee: **Hewlett-Packard Development Company, L.P.**, Houston, TX (US)

(*) Notice: Subject to any disclaimer, the term of this patent is extended or adjusted under 35 U.S.C. 154(b) by 0 days.

(21) Appl. No.: **10/134,813**

(22) Filed: **Apr. 29, 2002**

(51) **Int. Cl.**[7] **B41J 29/38**
(52) **U.S. Cl.** **347/14**; 347/17
(58) **Field of Search** 347/14, 17

(56) **References Cited**

U.S. PATENT DOCUMENTS

4,947,194 A * 8/1990 Kyoshima 347/67
6,109,718 A * 8/2000 Murakami et al. 347/14
6,406,113 B1 * 6/2002 Kato 347/14
6,471,315 B1 * 10/2002 Kurata 347/8
2001/0001558 A1 * 5/2001 Ishinaga et al. 347/3

* cited by examiner

Primary Examiner—Hai Pham
Assistant Examiner—Alfred Dudding

(57) **ABSTRACT**

The present invention includes as one embodiment an inkjet printing system, having a substrate, a plurality of heating elements disposed on the substrate, an ink ejection assembly adjacent the substrate forming a plurality of ink ejection chambers, each chamber associated with a different one of the heating elements and a controller operatively connected to the heating elements, the controller receiving print data and processing the print data to predict thermal conditions of a subset of the ink ejection chambers for selectively operating the corresponding heating elements of the subset.

25 Claims, 6 Drawing Sheets

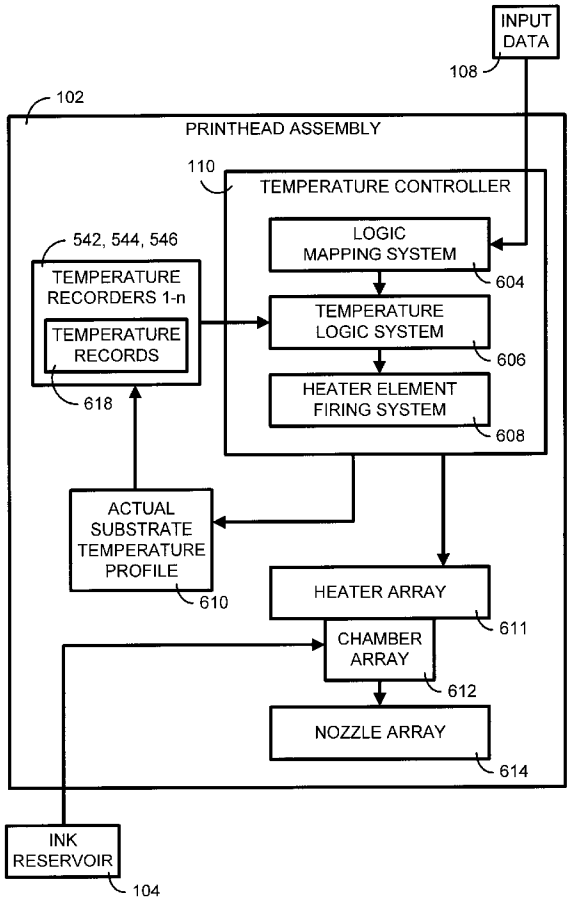

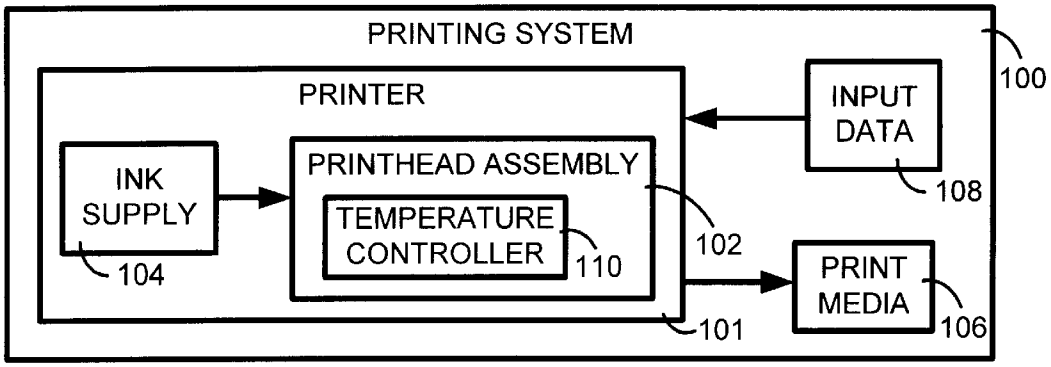
PRINTING SYSTEM
100
PRINTER
INPUT DATA
108
INK SUPPLY
104
PRINTHEAD ASSEMBLY
TEMPERATURE CONTROLLER
110
102
PRINT MEDIA
106
101

FIG. 1

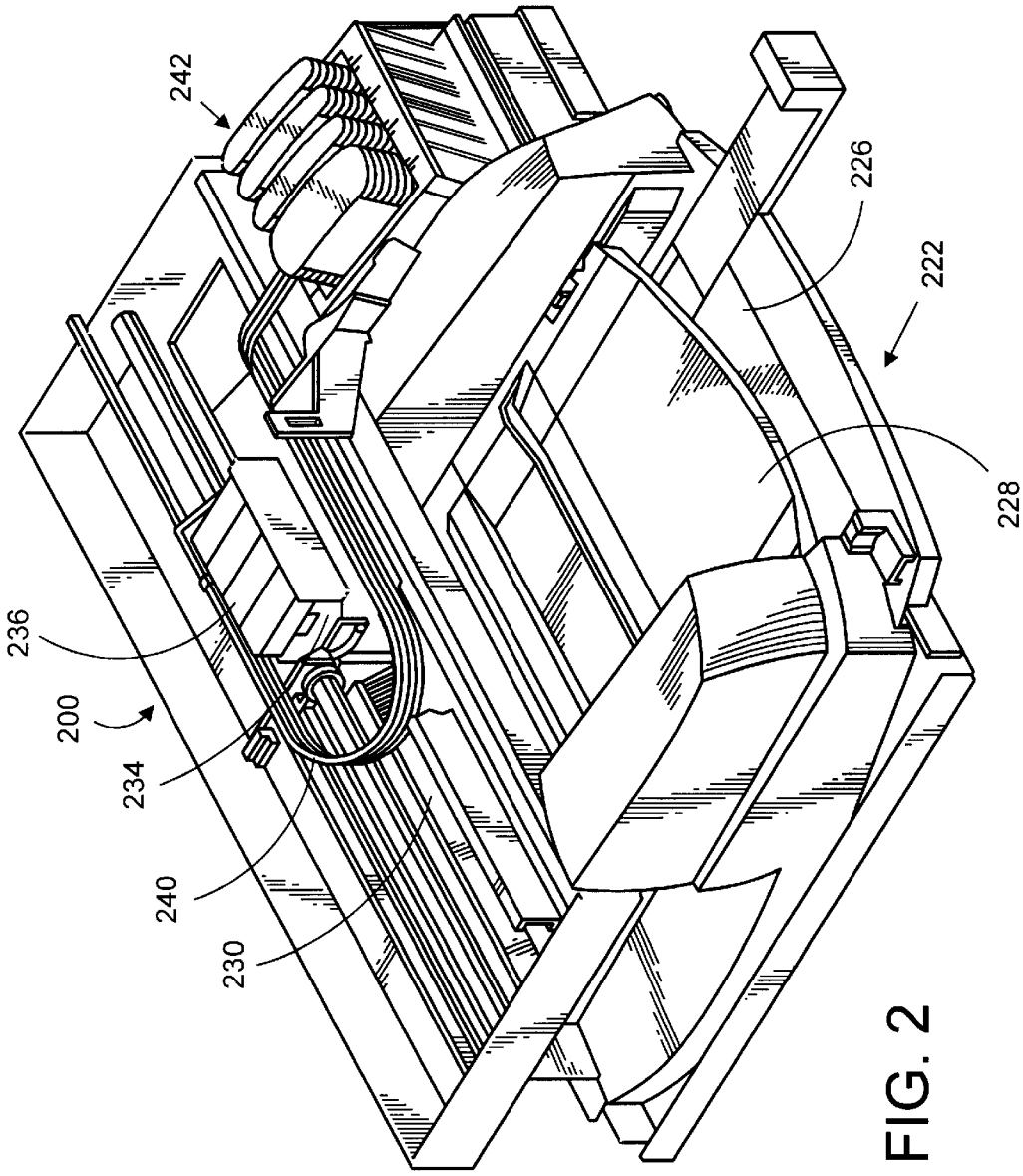
242
226
222
228
236
200
234
240
230

FIG. 2

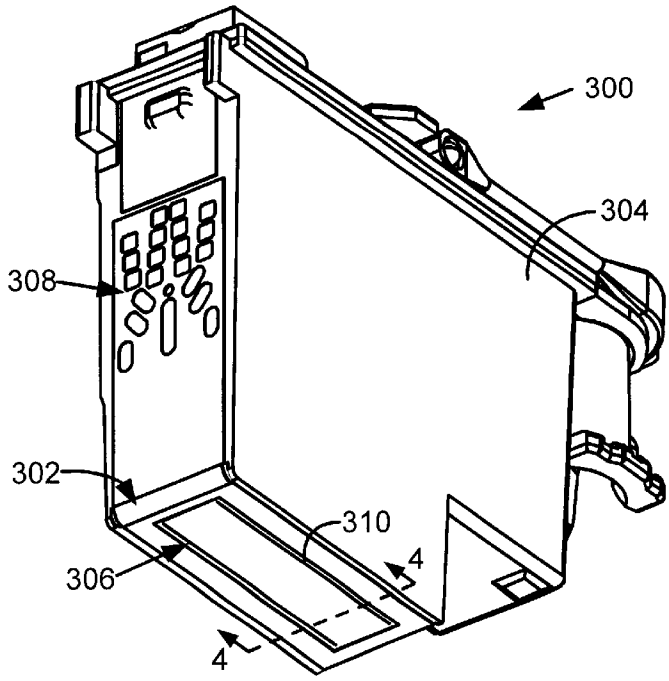

FIG. 3

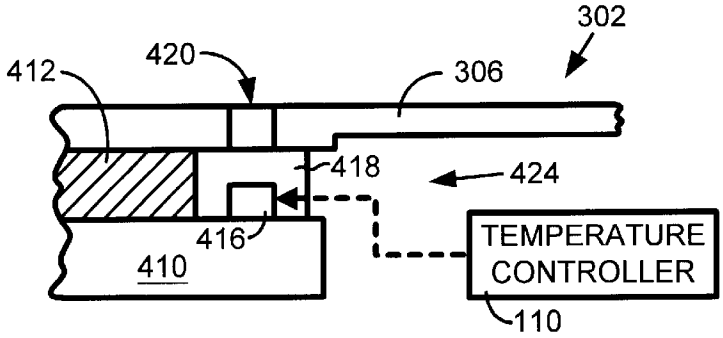

FIG. 4

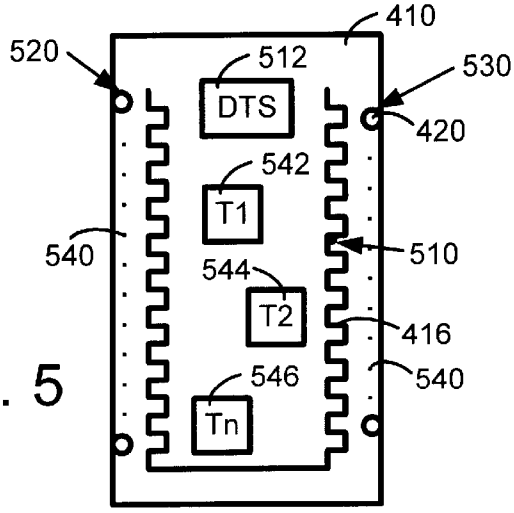

FIG. 5

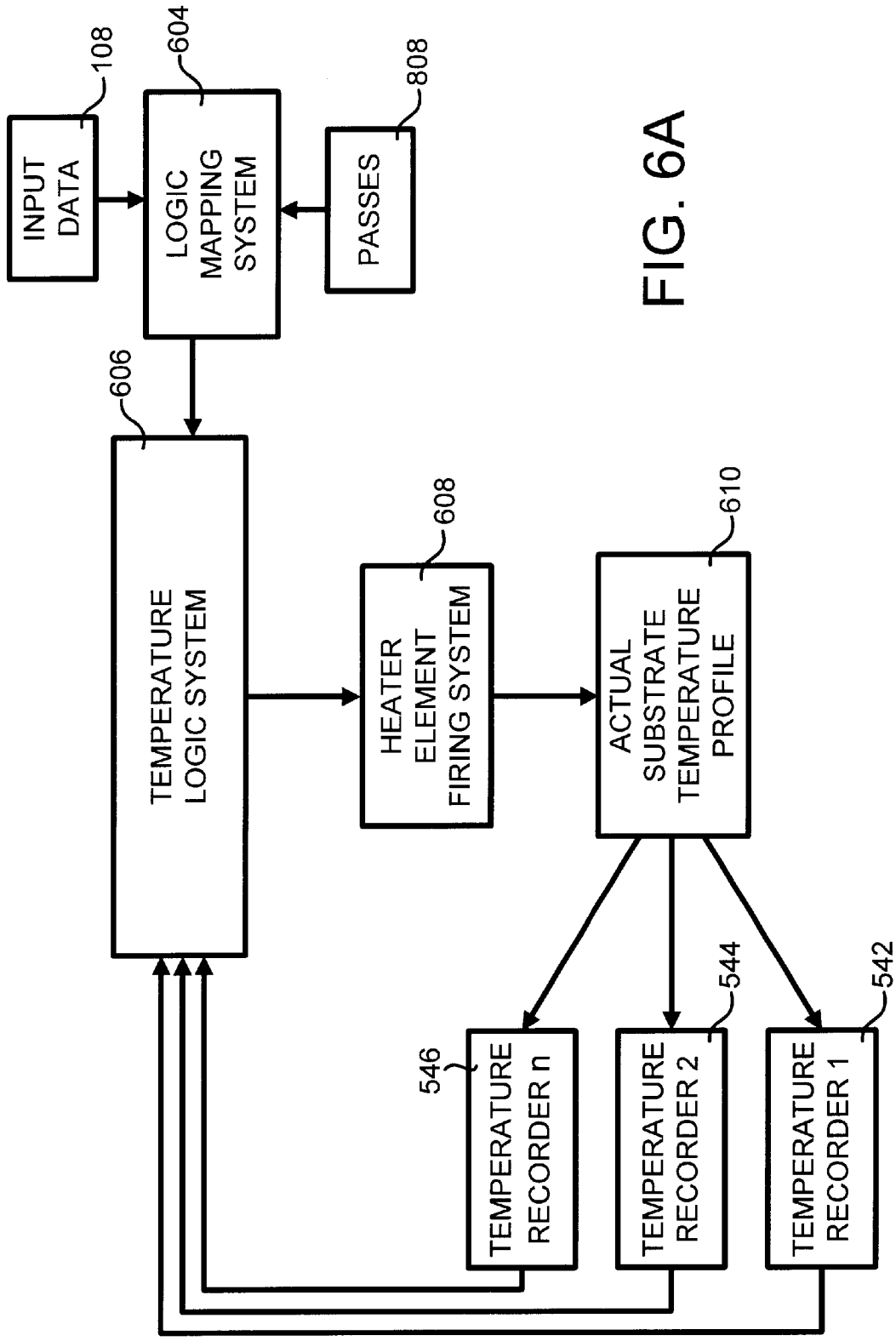
INPUT DATA
108
LOGIC MAPPING SYSTEM
604
PASSES
808
TEMPERATURE LOGIC SYSTEM
606
HEATER ELEMENT FIRING SYSTEM
608
ACTUAL SUBSTRATE TEMPERATURE PROFILE
610
TEMPERATURE RECORDER n
546
TEMPERATURE RECORDER 2
544
TEMPERATURE RECORDER 1
542

FIG. 6A

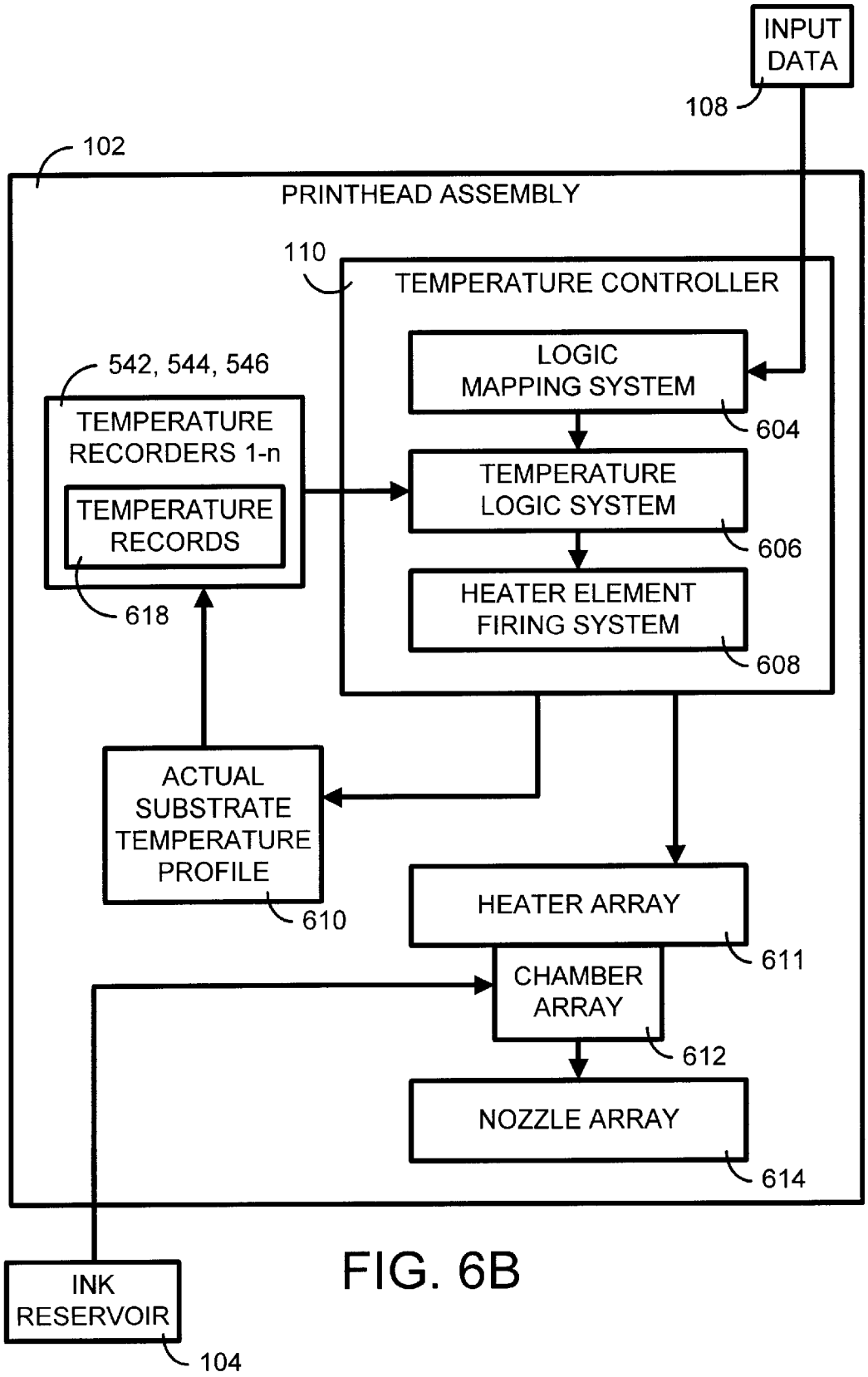
INPUT DATA
108
102
PRINTHEAD ASSEMBLY
110
TEMPERATURE CONTROLLER
LOGIC MAPPING SYSTEM
604
542, 544, 546
TEMPERATURE RECORDERS 1-n
TEMPERATURE RECORDS
618
TEMPERATURE LOGIC SYSTEM
606
HEATER ELEMENT FIRING SYSTEM
608
ACTUAL SUBSTRATE TEMPERATURE PROFILE
610
HEATER ARRAY
611
CHAMBER ARRAY
612
NOZZLE ARRAY
614
INK RESERVOIR
104

FIG. 6B

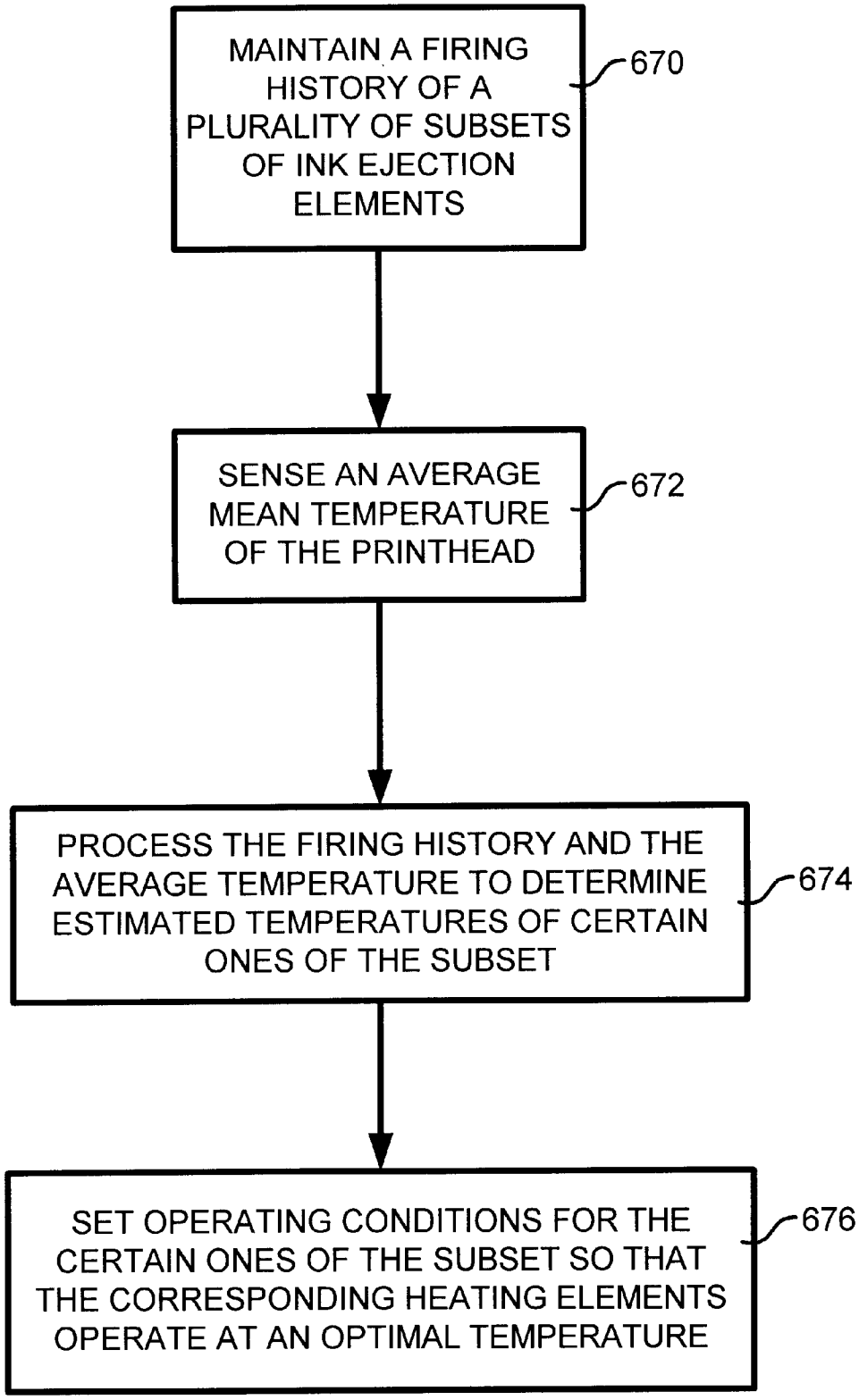
MAINTAIN A FIRING HISTORY OF A PLURALITY OF SUBSETS OF INK EJECTION ELEMENTS
670
SENSE AN AVERAGE MEAN TEMPERATURE OF THE PRINTHEAD
672
PROCESS THE FIRING HISTORY AND THE AVERAGE TEMPERATURE TO DETERMINE ESTIMATED TEMPERATURES OF CERTAIN ONES OF THE SUBSET
674
SET OPERATING CONDITIONS FOR THE CERTAIN ONES OF THE SUBSET SO THAT THE CORRESPONDING HEATING ELEMENTS OPERATE AT AN OPTIMAL TEMPERATURE
676

FIG. 6C

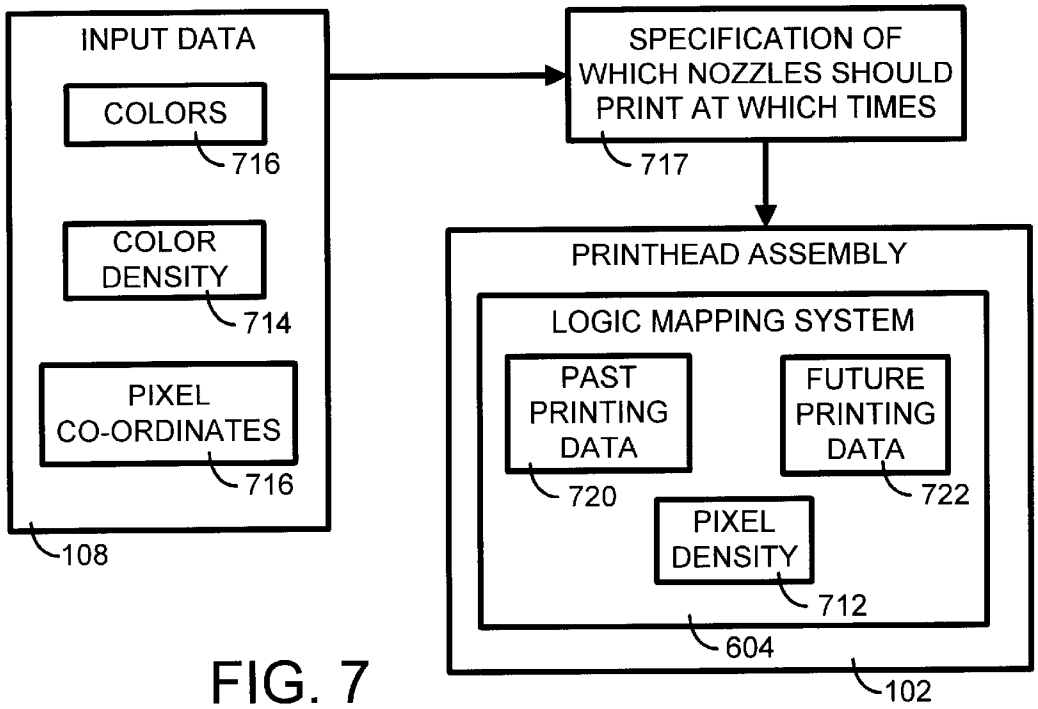
INPUT DATA
COLORS
716
COLOR DENSITY
714
PIXEL CO-ORDINATES
716
108
SPECIFICATION OF WHICH NOZZLES SHOULD PRINT AT WHICH TIMES
717
PRINTHEAD ASSEMBLY
LOGIC MAPPING SYSTEM
PAST PRINTING DATA
720
FUTURE PRINTING DATA
722
PIXEL DENSITY
712
604
102

FIG. 7

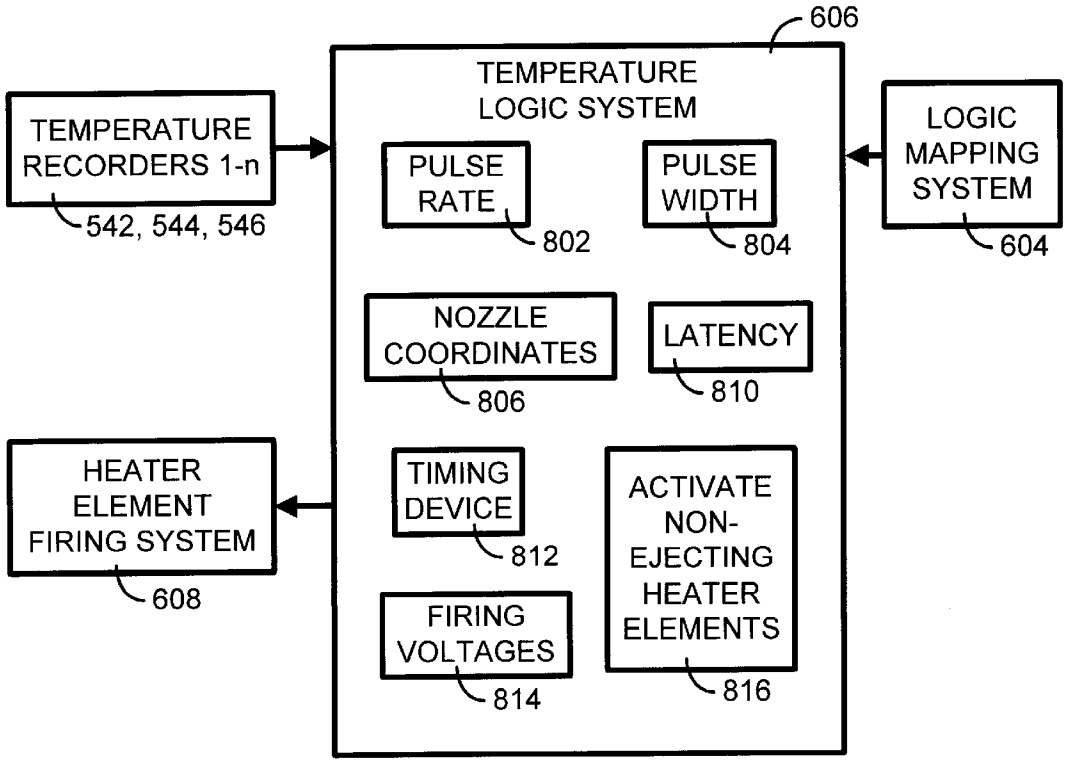
606
TEMPERATURE LOGIC SYSTEM
TEMPERATURE RECORDERS 1-n
542, 544, 546
PULSE RATE
802
PULSE WIDTH
804
LOGIC MAPPING SYSTEM
604
NOZZLE COORDINATES
806
LATENCY
810
HEATER ELEMENT FIRING SYSTEM
608
TIMING DEVICE
812
ACTIVATE NON-EJECTING HEATER ELEMENTS
816
FIRING VOLTAGES
814

FIG. 8

SYSTEM AND METHOD FOR PREDICTING DYNAMIC THERMAL CONDITIONS OF AN INKJET PRINTING SYSTEM

BACKGROUND OF THE INVENTION

One factor in assuring high print quality of inkjet printers is the control over the uniformity of ejected ink drops. Ink drop uniformity can be controlled by managing the temperature developed in heating elements, such as resistors, of the printhead. The heating elements reach high temperatures in order to produce explosive vaporization when vaporizing the ink. Some properties of an ink drop vary with temperature and there is an optimal temperature operating range for typical printheads using inks.

A heat-related problem can occur when the controller fires a heating element a number of times in a short period of time. This causes the heating element to reach a temperature that is higher than that required to produce ink drops having the correct size. Also, if the length of the current pulse to the resistor is longer than a pre-determined limit, the temperature of the heating element will again be too high for producing an ideal ink drop.

Another problem that can occur if the temperature at the heating element gets too high is that the gas formed will create bubbles that will choke the nozzle. In contrast, if the temperature is too low, the formation of ink droplets will be poor leading to a decrease in image quality of the image formed as these droplets are deposited on the print medium. These variations in drop weight, or the creation of bubbles, result in visible hue shifts and image quality defects.

Another potential problem caused by excessively high temperatures is that ink dyes can decompose leaving residues on the resistor surface. These residues can interfere with nucleation and drop formation, which can result in ink droplets with lower drop weight and lower velocity. This often causes print quality problems.

SUMMARY OF THE INVENTION

The present invention includes as one embodiment an inkjet printing system, comprising a substrate, a plurality of heating elements disposed on the substrate, an ink ejection assembly adjacent the substrate forming a plurality of ink ejection chambers, each chamber associated with a different one of the heating elements and a controller operatively connected to the heating elements, the controller receiving print data and processing the print data to predict thermal conditions of a subset of the ink ejection chambers for selectively operating the corresponding heating elements of the subset.

BRIEF DESCRIPTION OF THE DRAWINGS

The present invention can be further understood by reference to the following description and attached drawings that illustrate the preferred embodiments. Other features and advantages will be apparent from the following detailed description of the preferred embodiment, taken in conjunction with the accompanying drawings, which illustrate, by way of example, the principles of the invention.

FIG. **1** shows a block diagram of an overall printing system incorporating one embodiment of the present invention.

FIG. **2** is an exemplary printer usable with the system of FIG. **1** that incorporates one embodiment of the invention and is shown for illustrative purposes only.

FIG. **3** shows for illustrative purposes only a perspective view of an exemplary print cartridge usable with the printer of FIG. **2** incorporating one embodiment of the present invention.

FIG. **4** is a schematic cross-sectional view taken through a portion of section line **4**—**4** of FIG. **3** showing a portion of the ink chamber arrangement of an exemplary printhead assembly in the print cartridge of FIGS. **1** and **3**.

FIG. **5** is a schematic top view of the substrate of the printhead assembly of FIG. **4** according to one embodiment of the present invention.

FIG. **6**A is a basic flow diagram illustrating the data flow between various elements of a printhead that incorporates one embodiment of the present invention.

FIG. **6**B is a more detailed flow diagram of a printhead according to FIG. **6**A that incorporates an embodiment of the present invention.

FIG. **6**C is an operational flow chart of a printhead according to FIG. **6**A that incorporates an embodiment of the present invention.

FIG. **7** shows a block diagram of the input data interaction with the logic mapping system of FIGS. **6**A and **6**B in one embodiment of the present invention.

FIG. **8** shows a more detailed block diagram of one embodiment of the temperature logic system of FIGS. **6**A and **6**B according to the present invention.

DETAILED DESCRIPTION OF THE PREFERRED EMBODIMENTS

In the following description of the invention, reference is made to the accompanying drawings, which form a part hereof, and in which is shown by way of illustration a specific example in which the invention may be practiced. It is to be understood that other embodiments may be utilized and structural changes may be made without departing from the scope of the present invention as defined by the claims appended below.

I. General Overview

FIG. **1** shows a block diagram of an overall printing system incorporating one embodiment of the present invention. The printing system **100** of one embodiment of the present invention includes a printhead assembly **102**, ink supply or ink reservoir **104** and print media **106**. The printhead assembly **102** and the ink reservoir **104** are typically included in a printer **101**. Input data **108** is sent to the printing system **100** and includes, among other things, information about the print job. Also included is a temperature control system **110** for predicting dynamic thermal conditions of the printhead assembly **102**. In addition, the printhead assembly **102** includes a substrate, such as a semiconductor wafer or die, with ink ejection elements and associated ejection chambers for releasing the ink through corresponding nozzles or orifices in an adjacent nozzle member.

In general, the temperature controller **110** is coupled to multiple temperature sensors (not shown). The multiple temperature sensors preferably determine, at a given time, a mean or average temperature of the substrate and an actual local temperature profile near designated ink ejection elements. The temperature controller **110** can be an integrated circuit, firmware, a software printer driver or the like which controls the mean temperature of the substrate of the printhead through a feedback loop (discussed in detail below).

When the sensors detect that the mean temperature of the substrate has dropped below a predefined baseline or thresh-

old temperature, the loop activates the heating elements in an effort to raise the substrate above the baseline temperature before printing. As will be discussed subsequently in greater detail, the temperature controller **110** uses the input data **108** to predict thermal conditions of particular ejection chambers for selectively firing the associated heating elements.

Hence, the temperature controller **110** aids in controlling the temperature of the substrate and the temperature of each ejection chamber or nozzle chamber. This results in improved print quality and printhead life because the printhead **102** will consequently operate closer to its optimum temperature.

II. Exemplary Printing System

FIG. **2** is an exemplary embodiment of a printer that incorporates an embodiment of the invention and is shown for illustrative purposes only. Generally, printer **200**, which is shown in FIG. **2** as one type of printer **101** of FIG. **1**, can incorporate the printhead **102** of FIG.**1** and further include a tray **222** for holding print media. When printing operation is initiated, print media, such as paper, is fed into printer **200** from tray **222** preferably using sheet feeder **226**. The sheet is then brought around in a U direction and then travels in an opposite direction toward output tray **228**. Other paper paths, such as straight paper path, can also be used.

The sheet is stopped in a print zone **230**, and a scanning carriage **234**, supporting one or more printhead assemblies **236**, is scanned across the sheet for printing a swath of ink thereon. After a single scan or multiple scans, the sheet is then incrementally shifted using, for example a stepper motor or feed rollers to a next position within the print zone **230**. Carriage **234** again scans across the sheet for printing a next swath of ink. The process repeats until the entire sheet has been printed, at which point it is ejected into the output tray **228**.

The print assemblies **236** can be removeably mounted or permanently mounted to the scanning carriage **234**. Also, the printhead assemblies **236** can have self-contained ink reservoirs which provide the ink supply **104** of FIG. **1**. Alternatively, each print cartridge **236** can be fluidically coupled, via a flexible conduit **240**, to one of a plurality of fixed or removable ink containers **242** acting as the ink supply **104** of FIG. **1**.

FIG. **3** shows for illustrative purposes only a perspective view of an exemplary print cartridge **300** (an example of the printhead assembly **102** of FIG. **1**) incorporating one embodiment of the present invention. A detailed description of the present invention follows with reference to a typical print cartridge used with a typical printer, such as printer **200** of FIG. **2**. However, the embodiments of the present invention can be incorporated in any printhead and printer configuration.

Referring to FIGS. **1** and **2** along with FIG. **3**, the print cartridge **300** is comprised of a thermal head assembly **302** and a body **304**. The thermal head assembly **302** can be a flexible material commonly referred to as a Tape Automated Bonding (TAB) assembly. The thermal head assembly **302** contains a nozzle member **306** to which the substrate is attached to form the printhead assembly **102**. Thermal head assembly **302** also has interconnect contact pads (not shown) and is secured to the printhead assembly **300** with suitable adhesives. Contact pads **308** align with and electrically contact electrodes (not shown) on carriage **234**. The nozzle member **306** preferably contains plural parallel rows of offset nozzles **310** through the thermal head assembly **306** created by, for example, laser ablation. Other nozzle arrangements can be used, such as non-offset parallel rows of nozzles.

III. Component Details

FIG. **4** is a cross-sectional schematic taken through a portion of section line **4—4** of FIG. **3** of the print cartridge **300** utilizing one embodiment of the present invention. A detailed description of one embodiment of the present invention follows with reference to a typical print cartridge **300**. However, embodiments of the present invention can be incorporated in any printhead configuration. Also, the elements of FIG. **4** are not to scale and are exaggerated for simplification.

Referring to FIGS. **1–3** along with FIG. **4**, in general, the thermal head assembly **302** includes a substrate **410** and a barrier layer **412** located between the nozzle member **306** and the substrate **410** for insulating conductive elements from the substrate **410** and for forming a plurality of ink ejection chambers **418** (one of which is shown). Also included are a corresponding plurality of heating elements **416** disposed on the substrate. The temperature controller **110** is operatively connected to the heating elements **416**. Each chamber **418** is associated with a different one of the heating elements **416**. The temperature controller **110** receives print data and processes the print data to predict thermal conditions of a subset of the ink ejection chambers **418** for selectively operating the corresponding heating elements **416** of the subset.

An ink ejection or vaporization chamber **418** is adjacent each ink ejection element **416**, as shown in FIG. **4**, so that each ink ejection element **416** is located generally behind a single orifice or nozzle **420** of the nozzle member **306**. The nozzles **420** are shown in FIG. **4** to be located near an edge of the substrate **410** for illustrative purposes only. The nozzles **420** can be located in other areas of the nozzle member **306**, such as centered between an edge of the substrate **410** and an interior side of the body **304**.

The ink ejection elements **416** may be resistor heater elements or piezoelectric elements, but for the purposes of the following description, the ink ejection elements are referred to as resistor heater elements. In the case of resistor heater elements, each ink ejection element **416** acts as an ohmic heater when selectively energized by one or more pulses applied sequentially or simultaneously to one or more of the contact pads via the integrated circuit.

The orifices **420** may be of any size, number, and pattern, and the various figures are designed to simply and clearly show the features of one embodiment of the invention. The relative dimensions of the various features have been greatly adjusted for the sake of clarity.

FIG. **5** is a top view of the substrate in one embodiment of the present invention. Referring to FIGS. **1–4** along with FIG. **5**, the temperature controller **110** of FIG. **1** is coupled to at least one measurement sensor. In one embodiment, there are two measurement sensors, namely, a thermal sense resistor (TSR) **510** and a digital temperature sensor (DTS) **512**. One or multiple TSRs **510** can be used to provide an approximation of the mean temperature of the substrate. Preferably, it is not located adjacent to any particular heating element and reflects the temperature of the substrate **410** after heat has moved from the heating elements to the TSR **510**. The TSR **510** therefore reports a temperature that reflects heating element firings that have already occurred.

Conversely, the DTS **512** is a point sensor located at the top of the substrate **410** between a first column **520** of nozzles **420** (not shown to scale) and a second column **530** of nozzles **420** (the dotted lines **540** represent numerous consecutive nozzles, which are not shown for simplicity). While this sensor **512** typically more accurately reflects the

temperature at that point, it does not give an accurate temperature for other heating elements on the substrate **410**. Therefore, in one embodiment of the present invention, the temperature controller **110** uses both the TSR **510** and the DTS **512** to control the temperature.

In one embodiment, the DTS **512** is located in the center of the substrate **410**, between the first and second rows **520**, **530** of the lower numbered nozzles at the top portion of the substrate. The TSR **510** is located along the length of the substrate **410**. The TSR **510** can have two legs that are approximately 680 um inboard from the center of the columns of ink ejection elements **416**.

In addition, the substrate includes temperature recorders **542**, **544**, **546** that work with the measurement sensors to allow the temperature controller **110** to improve the thermal efficiency of the printhead **102** by predicting dynamic thermal effects. The temperature recorders **542**, **544**, **546** are shown in FIG. **5** as three recorders for illustrative purposes and any suitable number of recorders can be used to determine the mean temperature of the substrate **410** as well as localized actual temperature profiles of the substrate **410**. Referring to FIG. **5** along with FIGS. **1–4**, the substrate includes plural temperature recorders T1 **542**, T2 **544**, Tn **546** that are coupled to the temperature controller **110**. Each temperature recorder **542**, **544**, **546** records a temperature at a predefined specific location on the substrate **410**.

The temperature recorders **542**, **544**, **546** are strategically distributed around the substrate **410** and each measures a local temperature. The local temperatures are then averaged to generate a mean average temperature of the substrate **410**. Also, plural thermal sense resistor (TSR) temperature recorders can be located along paths of predefined areas near ink ejection elements for generating actual localized temperature profiles, as discussed above, along the length of the TSRs. Also, each temperature recorder **542**, **544**, **546** has a memory with a library of temperature histories based on a variety of thermally important variables. The temperature input, therefore reflects a history that can be used to predict future temperature conditions, in addition to the actual temperature of the substrate.

Referring to FIGS. **1–4**, during a printing operation, ink stored in an ink reservoir **424** defined by the printhead body **304** generally flows around the edges of the substrate **410** and into the vaporization chambers **418**. Energization signals are sent to the ink ejection elements **416** and are produced from the electrical connection between the print cartridges **236** and the printer **200**. Upon energization of the ink ejection elements **416**, a thin layer of adjacent ink is superheated.

In particular, the energized heater element **416** causes explosive vaporization and, consequently, causes a droplet of ink to be ejected through the orifice or nozzle **420**. The vaporization chamber **418** is then refilled by capillary action. This process enables selective deposition of ink on print media **106** to thereby generate text and images. Consequently, when the printhead assembly **300** is scanned across the print media during printing, variations in the size or physical nature of the ink droplet will affect the location and/or the action of the ejected ink on the print media and therefore affect the quality of printing.

Temperature control plays an important role in the variation in the size or physical nature of the ink droplet. For instance, the ideal mean temperature of the substrate **410** for ejecting an ink droplet is about **50** degrees C, but the heating elements **416** can reach a temperature of **500** degrees C in 3 microseconds. If the temperature controller **110** instructed firing to occur several times in a short period, or if the width of the firing pulse was lengthened, the heating element **416** would reach a temperature above that required to produce the correct sized ink drop.

In operation in one embodiment of the present invention, thermal conditions of a subset of the ink ejection elements **416** are predicted before the sensor **510** and **512** of FIG. **5** senses a temperature of the subset. Then operating conditions for the subset are set so that the corresponding heating elements **416** operate at an optimal temperature. In another embodiment, a firing history of a plurality of subsets of ink ejection elements are maintained, an average temperature of the printhead assembly **102** is sensed, and the firing history and the average temperature is processed to determine estimated temperatures of certain ones of the subset. Then operating conditions for the certain ones of the subset are set so that the corresponding heating elements operate at an optimal temperature.

IV. Operation Details

Referring to FIGS. **1–5** along with FIG. **6**A, in general, the temperature controller **110** can have integrated circuitry that includes a logic mapping system **604** which defines the timing and sequencing in which certain ink ejection chambers **418** are fired in order to deposit ink drops on the medium in the pixel locations required to produce the image, and a temperature logic system **606** that generates various printing parameters. The logic mapping system **604** is a feature of the temperature controller **110** that analyzes the input data **108** and a number of passes that the printhead **300** makes and defines the image to be printed as a pattern of individual dots printed at particular locations of an array defined for the printing medium **106**.

During operation, an actual temperature profile **610**, which includes a current temperature of the substrate **410**, is sent to the multiple temperature recorders **542**, **544**, **546** that each measure current temperatures and store the measurements as temperature histories of certain respective portions the printhead assembly **102**. These temperature recorders **542**, **544**, **546** send recorded mean temperatures and a history of recorded temperatures of the substrate to the temperature logic system **606** along with past and future printing data from the logic mapping system **604** that is indicative of which ink ejection chambers **418** will be fired, and when each will be fired.

The temperature logic system uses these temperature and printing inputs, as well as some embedded knowledge (such as latencies in the response of the sensors to firing, and conduction paths between different nozzles since there may be slots separating some nozzles but not others), to generate printing parameters and then output them in a closed loop system to the actual substrate temperature profile **610**. The printing parameters can include pulse widths, pulse rates, ink ejection chambers **418** to be fired and when they will be fired, warming using non-ejecting devices, and firing voltages that act as the inputs for the actual substrate temperature profile **610**. Since a true temperature profile is difficult to measure, this closed loop method allows approximation of a temperature profile to improve ink drop quality.

FIG. **6**B is a detailed diagram of the printhead assembly **102** illustrated in FIG. **1**. In particular, referring to FIGS. **1–5** along with FIG. **6**A, FIG. **6**B shows that during a printing operation, ink is provided from an internal or external ink supply, such as the ink reservoir **104**, to an interior portion of the printhead **102**. The interior portion of the printhead **102** provides ink to the ink ejection chamber array **612** via

ink channels (not shown) for ejecting ink from the individual chambers (not shown) through nozzles of the nozzle array **614** adjacent to each chamber. The printhead assembly **102** receives commands from the temperature controller **110** to eject ink onto the print media **106** so as to form a desired pattern of text and images. Print quality of the desired pattern is dependent, among other factors, on accurate placement of the ink droplets on the print media **106**.

The temperature logic system **606** is typically included in the controller **110**. The temperature logic system **606** receives the mapped data from the logic mapping system **604**. The locations are mapped to a predefined imaginary dot grid, such as a rectilinear array for spatially defining the desired location of the dots to be printed on the media. The dots represent pixels that vary in density. Providing small dots in the rectilinear array means that more dots can be printed per inch of the printed media and require a greater number of heater elements **608** being fired.

An increase in the total number of heater elements **608** firing, or an increase in the rate of firing of heater elements **608** will result in an increase in the mean substrate temperature from the collective average of the recorded temperature of each temperature recorder **542**, **544**, **546**. It should be noted that the greatest increase in temperature is in the recorders closest to the heater elements being fired. An increase in the firing of any heater element in the heater element firing system **608**, whether it is due to an increase in the rate of firing, or due to an increase in the width of the electrical pulse to the heater element will result in an increase in temperature at that individual heater element. As the dot size depends on the ink being at an optimal temperature when the heater element **608** fires, it is important that these factors be monitored. Thus, one embodiment of the present invention provides a means to co-ordinate these factors in a controller, the temperature logic system **606**.

The temperature logic system **606** utilizes general and specific data. The general data is global data that includes the total number of ejection element firings that are occurring at any given time and can also include the mean overall temperature. A portion of the general data is sent from the logic mapping system **604** and another portion is sent to the temperature logic system from the temperature recorders **542**, **544**, **546**. For example, the temperature recorders **542**, **544**, **546** provide the temperature logic system **506** with the mean temperature of the substrate. The temperature recorders each have a memory with temperature histories. The temperature input, therefore is a history that can be used to extrapolate future temperature conditions, in addition to providing the actual temperature of the substrate.

The specific data includes measured actual temperature profiles, as well as the firing that is done by specific nozzle groups. The information about the nozzle firings is sent from the logic mapping system **604**, and the temperature recorders **542**, **544**, **546** measure the actual temperature profiles. The specific data is sent to the temperature logic system **606** from the logic mapping system **604**, as has been discussed heretofore.

If the system determines the substrate would be too cool, adjustments need to be made to prevent the formation of ink drops that would be too small; conversely, if the substrate would be too hot, modifications need to be made to prevent bubble formation in the chamber array **612** and a consequent build up of residues.

The flow of ink also has an effect on the temperature of the substrate. The ink flows from the ink reservoir **104** through the ink channels **620** to the chamber array **612**. Ink is drawn into the chamber array **612** when the ink drops are ejected from the nozzle array **614**.

FIG. **6**C is an operational flow chart of a printhead according to FIG. **6**A that incorporates an embodiment of the present invention. In general, in operation, first a firing history of a plurality of subsets of ink ejection elements is maintained (step **670**). Second, a mean temperature of the printhead is sensed (step **672**). Third, the firing history and the average temperature are processed to determine estimated temperatures of certain ones of the subset (step **674**). Last, operating conditions for the certain ones of the subset are set so that the corresponding heating elements operate at an optimal temperature (step **676**).

FIG. **7** shows a block diagram of the input data interaction with the logic mapping system **604** of one embodiment of the present invention. Input data **108** either contains, or can be processed to determine, the pixel co-ordinates **716**, the number and density of pixels **712** to be produced, the colors **716** of each pixel, and the color densities **714** of each pixel and specification of which nozzles should print at which times **717**. The logic mapping system **604** contains past printing data **720**, and also contains future printing data **722** (such as which ink ejection chambers **418** will be operated when, as determined in advance of the actual printing from the input data **108**) that can be used in conjunction with the temperature data to set printing parameters.

The logic of the system operates in general by first having each temperature recorder record a series of temperatures. Next, the temperature logic system **606** uses the recorded temperatures along with the firing data discussed above from the logic mapping system **604** to recreate as closely as possible an estimated temperature profile **610**. This can be accomplished by interpolating and extrapolating the firing data and the measured temperatures at the discrete measurement points to estimate a profile. Basically, the temperature logic system **606**, via the closed loop with the logic mapping system **604**, is used to estimate the substrate temperature profile. The estimated substrate temperature profile is passed to the heater element firing system **608** for appropriately firing the heater elements.

FIG. **8** shows a block diagram of the temperature logic system incorporated in one embodiment of the present invention. The temperature logic system **606** analyzes the data from the temperature recorders **542**, **544**, **546** and the logic mapping system **604**. The analysis includes receiving specific data from the logic mapping system **604** and general data from the temperature recorders **542**,**544**,**546**, and automatically compiling the order and length of firing of heater elements **608** to operate the ink ejection chambers **418** in the printhead assembly **102**.

This is a predictive function. The logic mapping system **604** defines the timing and sequencing in which certain ink ejection chambers **418** are fired. The logic mapping system **604** determines whether inkjet elements of the subset have been printing. Also, a first group of operating conditions is set if the elements of the subset have been printing, and a second group of operating conditions is set if the elements of the subset have been quiescent.

The logic mapping system **604** passes this past and future data to the temperature logic system **606**, which generates the pulse rate **802**, pulse width **804**, nozzle coordinates **806** and firing voltages **814**. The pulse width **804**, voltage to resistors **814**, heating using elements other than the resistors, the identity of nozzles to be fired and the specific times they are to be fired, are based on previous input data from temperature records **618**, as well as the current input data **108**.

This information is combined with the feedback on the recorded temperature of the substrate **410** and the effect of the latency of heating of the substrate elements to determine the pattern of nozzle firing. From the colors **716**, the color density **714** and the pixel co-ordinates **716**, the temperature logic system **606** determines the specific nozzles from the nozzle co-ordinates **806** that need to be engaged to produce the image on the print media.

The temperature logic system **606** then determines the firing rate and pulse width for each color controlled for pulse rate **802** and for pulse width **804**, and forwards the firing order to the heater element firing system **608**, through the timing device **812**. This rate, width and order of firing are programmed, and if necessary, adjusted in the programming, so that the temperature of the heater array **611**, and therefore the temperature of the ink in the chamber array **612**, are maintained at an optimum temperature for the formation of ink droplets. The temperature logic system also generates firing voltages **814** and activates heater elements that do not eject ink **816**.

In addition the timing device **812** makes adjustments to the number or width of firing pulses from the heater element firing system **608** in accordance with information from the temperature recorders **542**, **544**, **546** and the effect the firing of the heater element firing system **608** will have on the mean temperature. The heat from the heater elements will have to pass through the body of the substrate before reaching the temperature recorders **542**, **544**, **546**. There will therefore be a difference in temperature between the recorder and the heater elements. The controller element that calculates latency **810** will allow for this difference.

The temperature logic system **606** therefore acts as a predictive system for maintaining the substrate at an optimum temperature for producing ink droplets. As a result, the quality of the ink droplets will be increased. Further, since the firing system limits the rate, voltage or pulse width of firing of heater elements, less energy will be used. As such, the printhead assembly **102** will be easier to maintain with less residue being deposited on the heater array **611** or in the chamber array **612** or the nozzle array **614**.

The foregoing has described the principles, preferred embodiments and modes of operation of the present invention. However, the invention should not be construed as being limited to the particular embodiments discussed. The above-described embodiments should be regarded as illustrative rather than restrictive, and it should be appreciated that workers may make variations in those embodiments skilled in the art without departing from the scope of the present invention as defined by the following claims.

What is claimed is:

1. An inkjet printing system, comprising:

a substrate;

a plurality of heating elements disposed on the substrate;

a plurality of ink ejection chambers adjacent the substrate, each chamber associated with a different one of the heating elements; and

a controller operatively connected to the heating elements, the controller receiving and processing print data to predict thermal conditions of a subset of the ink ejection chambers, and operating selected ones of the corresponding heating elements of the subset according to the thermal conditions;

wherein the controller includes multiple temperature sensors to determine temperature profiles of at least some associated ones of the heating elements and further includes a logic mapping system that determines future printing data related to the predicted thermal conditions.

2. The inkjet printing system of claim **1**, wherein the controller is disposed on the substrate.

3. The inkjet printing system of claim **1**, wherein the controller is preprogrammed to operate the heating elements at an optimal temperature.

4. The inkjet printing system of claim **1**, wherein the print data includes at least one of firing pulse frequency, firing pulse width, and an amount of firing done by specific ejection chambers to allow the controller to estimate and control ink drop ejection temperature.

5. The inkjet printing system of claim **1**, wherein the future printing data defined by the logic mapping system includes pixel coordinates.

6. The inkjet printing system of claim **1**, wherein the future printing data defined by the logic mapping system includes at least one of a number and density of pixels to be produced and colors of each pixel.

7. The inkjet printing system of claim **1**, wherein the controller further comprises a temperature logic system that determines appropriate firing conditions for the selected heating elements based on the future printing data and the temperature profiles.

8. The inkjet printing system of claim **7**, wherein based on the pixel data, the logic mapping system identifies which of the ink ejection chambers will be fired, and a corresponding set of times at which the identified ink ejection chambers will be fired, in order to produce an image on a print media.

9. The inkjet printing system of claim **8**, wherein each of the firing conditions includes a firing rate, a firing energy, and a firing pulse width.

10. The inkjet printing system of claim **9**, wherein the firing rate, firing pulse width, and firing energy are programmed so that the temperature of the heater elements are maintained at an optimum temperature for the formation of ink droplets.

11. A method for printing with a thermal inkjet printhead having a plurality of ink ejection elements, each ink ejection element having a heating element, comprising:

predicting thermal conditions of a subset of the ink ejection elements before a temperature of the subset is sensed;

setting operating conditions for the subset so that the corresponding heating elements operate at an optimal temperature.

determining whether inkjet elements of the subset have been printing; and

setting a first group of operating conditions if the elements of the subset have been printing, and setting a second group of operating conditions if the elements of the subset have been quiescent.

12. The method of claim **11**, wherein the subset is selected from the group consisting of a single element, a set of adjacent elements, and all elements.

13. The method of claim **11**, wherein the predicting includes determining a firing rate of the subset, and wherein the setting includes setting a firing pulse width for the subset.

14. The method of claim **13**, wherein the predicting further includes determining an average temperature of the subset of the ink ejection elements.

15. A method for printing with a thermal inkjet printhead having a plurality of ink ejection elements, each ink ejection element having a heating element, comprising:

maintaining a firing history of a plurality of subsets of ink ejection elements;

sensing mean temperature of the printhead;

processing the firing history and the average temperature to determine estimated temperatures of certain ones of the subset; setting operating conditions for the certain ones of the subset so that the corresponding heating elements operate at an optimal temperature; and

determining future printing data related to predicted thermal conditions, wherein the future data includes pixel coordinates and at least one of a number and density of pixels to be produced and colors of each pixel.

16. The method of claim **15**, wherein based on the future data, further comprising determining a number of passes and a specific number of ejection chambers that need to be engaged to produce the image on the print media.

17. The method of claim **15** further comprising determining a firing rate, firing energy and a pulse width for each color controlled for color pulse rate and for color pulse width and then distributing the firing rate and firing energy to the heater elements for selectively firing specified heater elements.

18. The method of claim **17**, wherein the firing rate, pulse width and firing energy are programmed so that the temperature of the heater elements are maintained at an optimum temperature for the formation of ink droplets.

19. An inkjet printhead having a plurality of ink ejection elements, each ink ejection element having a heating element, the inkjet printhead comprising:

means for predicting thermal conditions of a subset of the ink ejection elements before a temperature of the subset is sensed; and

means for setting operating conditions for the subset so that the corresponding heating elements operate at an optimal temperature;

means for determining whether inkjet elements of the subset have been printing; and

means for setting a first group of operating conditions if the elements of the subset have been printing, and setting a second group of operating conditions if the elements of the subset have been quiescent.

20. The inkjet printhead of claim **19**, wherein the means for predicting includes means for determining a firing rate of the subset, and wherein the setting includes means for setting a firing pulse width for the subset.

21. The inkjet printhead of claim **19**, wherein the means for predicting further includes means for determining an average temperature of the thermal inkjet printer.

22. A temperature control system for a thermal inkjet printer having ink ejection chambers that deposit ink on a print medium as an image, the control system comprising:

a logic mapping system that defines timing and sequencing data in which predefined ink ejection chambers are fired;

a temperature logic system that receives and analyzes the timing and sequencing data to predict thermal conditions of a subset of the ink ejection chambers; and

a heater element firing system including plural heater elements, wherein the heater element firing system receives instruction signals from the temperature logic system to selectively operate heater elements corresponding to the subset of ink ejection chambers;

wherein the timing and sequencing data of the logic mapping system is used to define specific pixel locations of ink drops deposited on the print medium for producing the image.

23. The system of claim **22**, wherein the temperature logic system defines the image to be printed as a pattern of individual dots printed at particular locations of an array defined for the printing medium.

24. The system of claim **22**, further comprising a plurality of temperature recorders that measure current temperatures near the ink ejection chambers and store the measurements as temperature histories.

25. The system of claim **22**, wherein the heater element firing system further comprises a heater array of heater elements located near a chamber array of ink ejection elements located adjacent to a nozzle array of nozzles that releases the ink from the ink ejection chambers onto the print medium.

* * * * *