US007163272B2

(12) **United States Patent**
Parish et al.

(10) **Patent No.: US 7,163,272 B2**
(45) **Date of Patent: Jan. 16, 2007**

(54) **INKJET PRINT HEAD**

(75) Inventors: **George K. Parish**, Winchester, KY (US); **Kristi M. Rowe**, Richmond, KY (US)

(73) Assignee: **Lexmark International, Inc.**, Lexington, KY (US)

(*) Notice: Subject to any disclaimer, the term of this patent is extended or adjusted under 35 U.S.C. 154(b) by 251 days.

(21) Appl. No.: **10/865,655**

(22) Filed: **Jun. 10, 2004**

(65) **Prior Publication Data**

US 2005/0275676 A1 Dec. 15, 2005

(51) **Int. Cl.**
B41J 29/38 (2006.01)

(52) **U.S. Cl.** **347/17**; 347/14

(58) **Field of Classification Search** 347/17
See application file for complete search history.

(56) **References Cited**

U.S. PATENT DOCUMENTS

6,382,773 B1 5/2002 Chang et al.
6,612,673 B1 * 9/2003 Giere et al. 347/17
6,634,731 B1 10/2003 Kao et al.
2001/0004263 A1 * 6/2001 Ishinaga et al. 347/17
2002/0027574 A1 3/2002 Kao et al.
2002/0052932 A1 5/2002 Curtis et al.
2003/0081034 A1 * 5/2003 Bauer 347/17
2003/0142159 A1 * 7/2003 Askeland et al. 347/14

* cited by examiner

Primary Examiner—Stephen Meier
Assistant Examiner—Jannelle M. Lebron
(74) *Attorney, Agent, or Firm*—King & Schickli, PLLC

(57) **ABSTRACT**

Some embodiments of the present invention provide an inkjet print head having a housing defining an ink reservoir, a nozzle portion including a nozzle plate defining an ink chamber in fluid communication with the ink reservoir, and forming a fluid flow path between the ink chamber and the ink reservoir, and a substrate coupled to the nozzle plate and having a surface substantially positioned over the nozzle plate. At least one heating element can be coupled to the substrate, and can be positioned adjacent the surface to heat a portion of the ink chamber. In some embodiments, the inkjet print head comprises a control circuit coupled to the at least one heating element for controlling the heating element, and a temperature sense element positioned substantially between the at least one heating element and the control circuit or in at least partially overlapping relationship with the heating element.

9 Claims, 3 Drawing Sheets

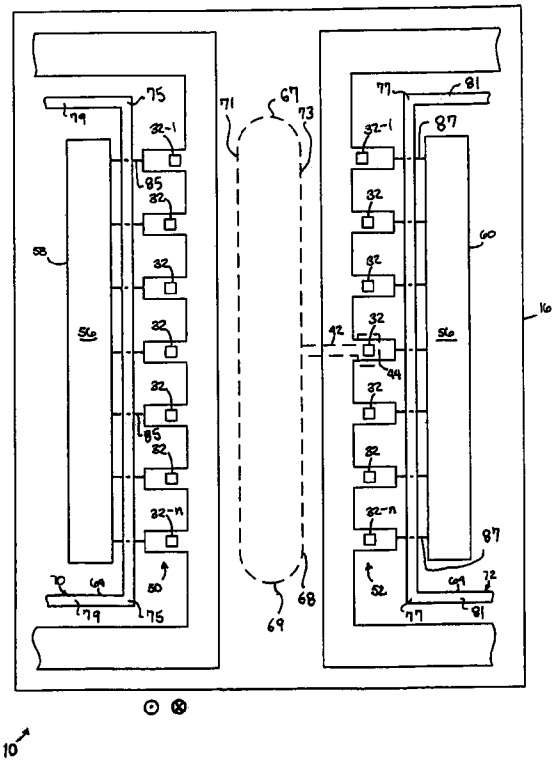

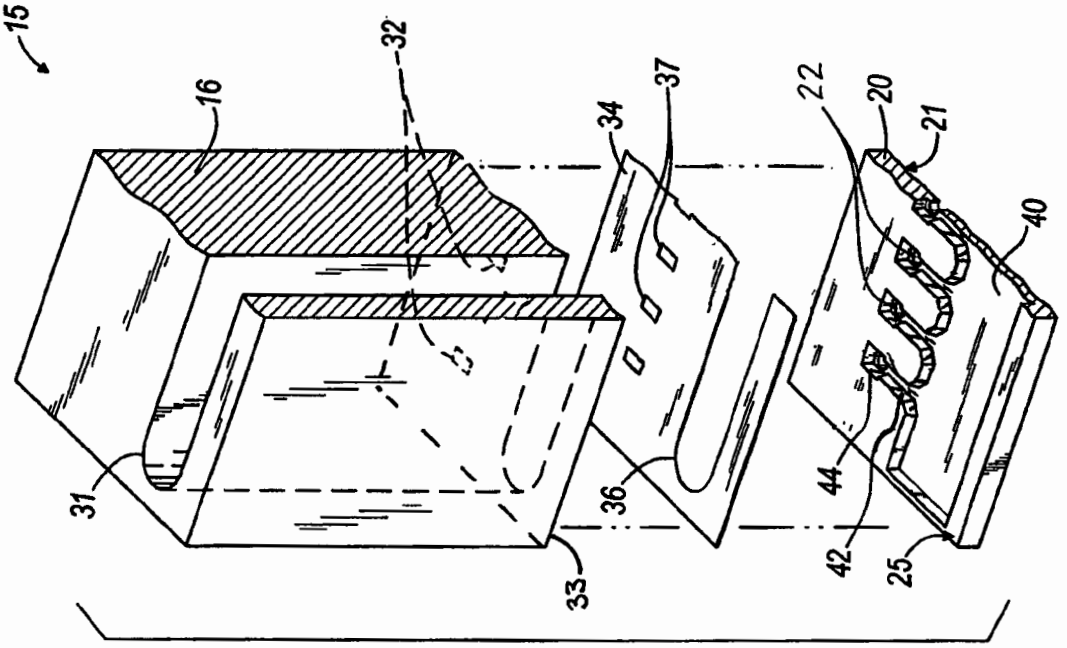
15
16
32
31
33
34
37
36
22
20
21
40
44
42
25

FIG. 2

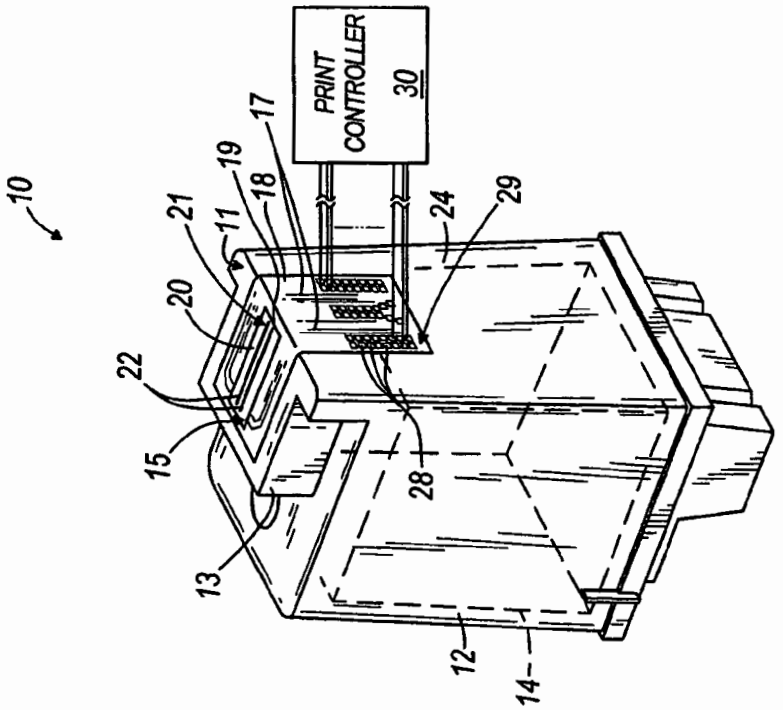
10
PRINT CONTROLLER 30
17
19
18
21
11
20
22
15
13
12
14
28
24
29

FIG. 1

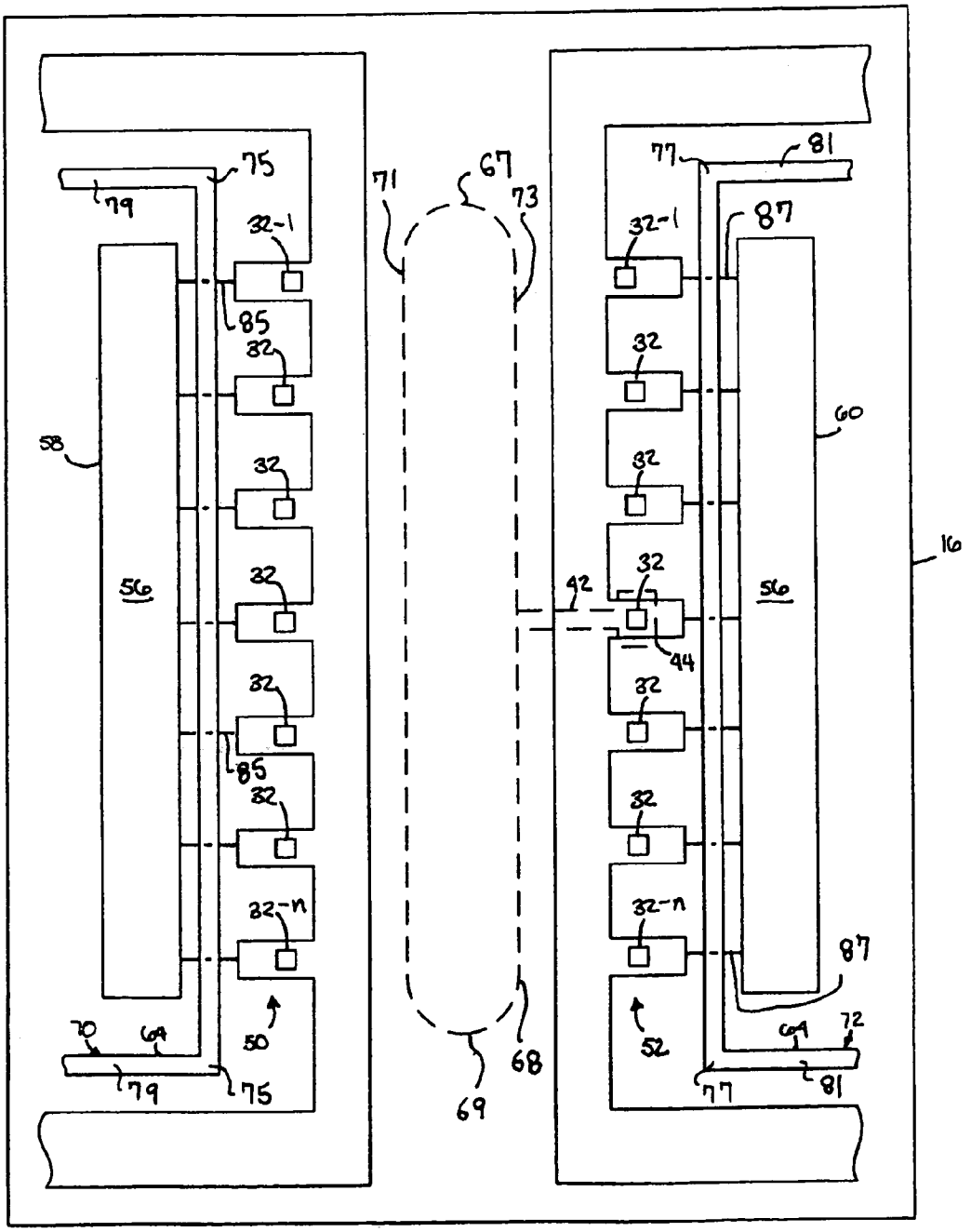
75
79
32-1
85
32
58
56
32-n
50
70
64
79
75
71
67
73
68
69
77
81
87
60
16
42
44
52
72

FIG. 3

10

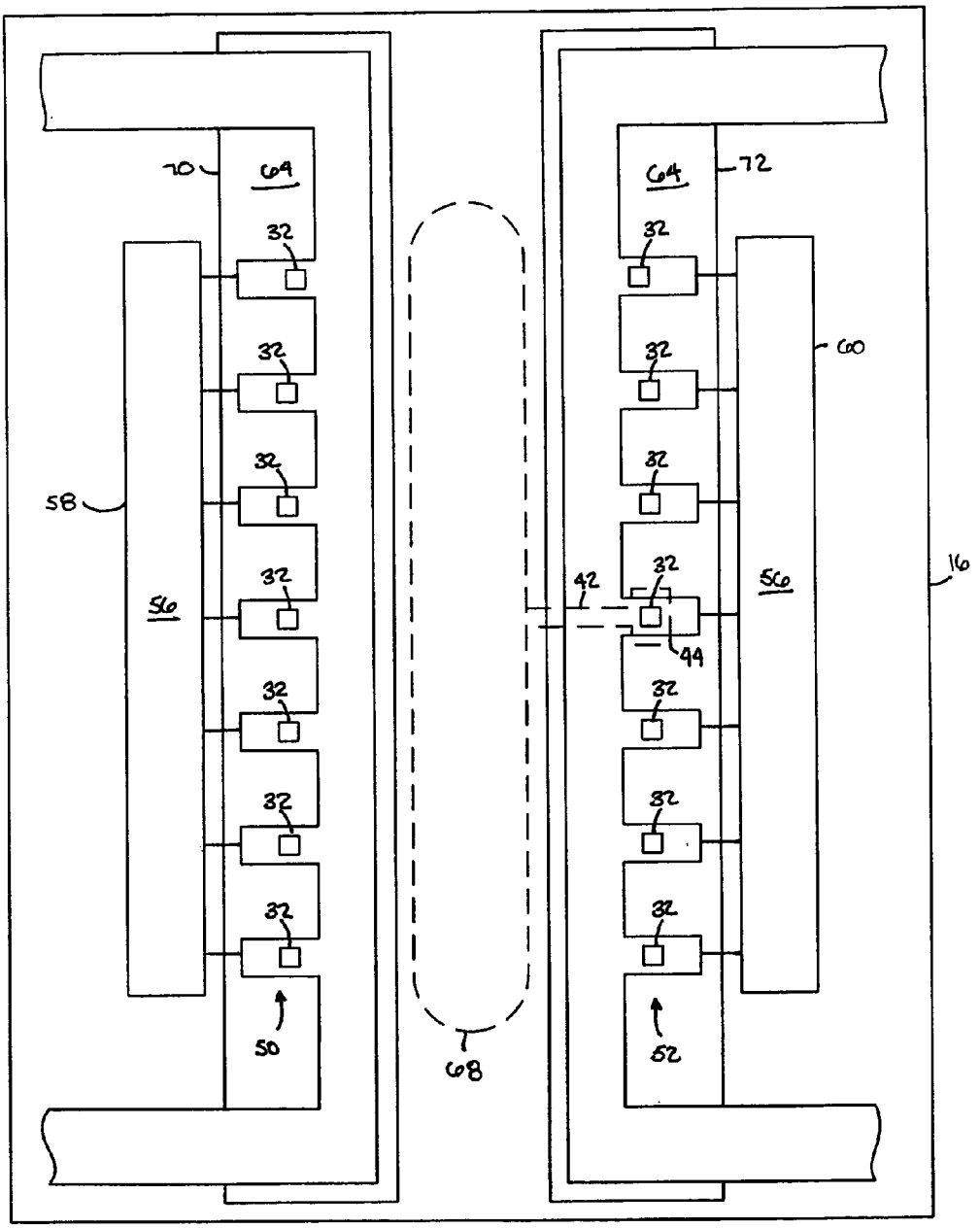

FIG. 4

10

INKJET PRINT HEAD

BACKGROUND OF THE INVENTION

The present invention generally relates to printing apparatus and in some embodiments, more particularly, to inkjet printers.

Inkjet print heads typically require a well-controlled substrate temperature to maintain a consistent ink viscosity and jetting performance. Currently, inkjet print heads include a temperature sense resistor (TSR) integrated into a chip to monitor the substrate temperature. The chip can also have dedicated power field effect transistors (FETs) to control the heating elements, as in U.S. Pat. No. 6,102,515 which is hereby incorporated by reference insofar as it relates to the use of FETs to control heating elements in print heads. In some examples, a printer control unit periodically monitors the TSR(s) to determine the substrate temperature. Then, the control unit turns heating elements on and off, accordingly, to maintain the proper substrate temperature for optimum jetting performance.

SUMMARY OF THE INVENTION

In some conventional print head designs, the positions of one or more TSRs can interfere with fluid flow to the heater nozzle of the print head (e.g., presenting detrimental topographical effects when placed over the fluid flow paths). Also, some print heads have TSRs that are located sufficiently far from the heating elements (which are typically positioned over portions of the ink flow) to generate inaccurate temperature readings in some conditions.

In some embodiments of the present invention, one or more temperature sense elements can be positioned with respect to the inkjet print head such that the temperature sense element(s) can provide accurate temperature readings while not interfering with ink flow or while providing reduced interference with ink flow. In some embodiments, the temperature sense elements include TSRs.

Some embodiments of the present invention provide an inkjet print head including a substrate, and comprising at least one actuator positioned proximate to a surface of the substrate; a control circuit coupled to the at least one actuator for controlling the actuator; and a temperature sense element positioned substantially between the at least one actuator and the control circuit.

In some embodiments, an inkjet print head is provided, and comprises at least one actuator positioned proximate to a surface of a substrate; and a temperature sense element embedded in the substrate and positioned such that at least a portion of the temperature sense element is in substantial overlapping relationship with at least a portion of the at least one actuator.

Some embodiments of the present invention provide an inkjet print head comprising a first plurality of heating elements forming a first heating array, the first heating array positioned to heat ink in at least a portion of a first plurality of ink chambers; a second plurality of heating elements forming a second heating array, the second heating array positioned to heat ink in at least a portion of a second plurality of ink chambers; a first control circuit coupled to the first heating array for controlling the first heating array; a second control circuit coupled to the second heating array for controlling the second heating array; a first temperature sense element positioned substantially between the first heating array and the first control circuit; and a second temperature sense element positioned substantially between the second heating array and the second control circuit.

In some embodiments, a method of controlling a temperature of an inkjet print head having a control circuit operatively coupled to a temperature sense element is provided, and comprises: heating ink in an ink chamber with a heater; and sensing a temperature of a substrate with the temperature sense element in at least one of a first location substantially between the control circuit and the heater and a second location in which the temperature sense element at least partially overlaps the heater.

BRIEF DESCRIPTION OF THE DRAWINGS

FIG. **1** is a perspective view of an inkjet print head.

FIG. **2** is a partial exploded view of the print head illustrated in FIG. **1**.

FIG. **3** is a plan view of a portion of an inkjet print head according to one embodiment.

FIG. **4** is a plan view of a portion of an inkjet print head according to another embodiment.

DETAILED DESCRIPTION

Before any embodiments of the invention are explained in detail, it is to be understood that the invention is not limited in its application to the details of construction and the arrangement of components set forth in the following description or illustrated in the following drawings. The invention is capable of other embodiments and of being practiced or of being carried out in various ways. Also, it is to be understood that the phraseology and terminology used herein is for the purpose of description and should not be regarded as limiting. The use of "including," "comprising" or "having" and variations thereof herein is meant to encompass the items listed thereafter and equivalents thereof, and can include additional items. The terms "mounted," "connected" and "coupled" are used broadly and encompass both direct and indirect mounting, connecting and coupling. Further, "connected" and "coupled" are not restricted to physical or mechanical connections or couplings.

FIG. **1** illustrates an inkjet print head **10** having a housing **12** that defines a nosepiece **13** and an ink reservoir **14** containing ink or an insert (e.g., a foam insert or other fluid-retaining insert) saturated with ink. The inkjet print head **10** illustrated in FIG. **1** has been inverted to illustrate a nozzle portion **15** of the print head **10**. The nozzle portion **15** is located at least partially on a bottom surface **111** of the nosepiece **13** for transferring ink from the ink reservoir **14** onto a printing medium, such as, for example, paper (including without limitation stock paper, stationary, tissue paper, homemade paper, and the like), film, tape, photo paper, a combination thereof, and any other medium used or usable in inkjet printing apparatus. The nozzle portion **15** can include a substrate (e.g., a chip **16**, not visible in FIG. **1**) and a nozzle plate **20** having a plurality of nozzles **22** that define a nozzle arrangement and from which ink drops are ejected onto a printing medium that is advanced through a printing apparatus (not shown).

The chip **16** can be formed of a variety of materials including, without limitation, various forms of doped or non-doped silicon, doped or non-doped germanium, or any other semiconducting material. In some embodiments, the chip **16** is positioned to be in electrical communication with conductive traces **17** provided on an underside of a tape member **18**. The chip **16** is hidden from view in the assembled print head **10** illustrated in FIG. **1**, and is attached

to the nozzle plate **20** in a removed area or cutout portion **19** of the tape member **18** such that an outwardly facing surface **21** of the nozzle plate **20** is generally flush with and parallel to an outer surface **29** of the tape member **18** for directing ink onto a printing medium via the plurality of nozzles **22** in fluid communication with the ink reservoir **14**. In other embodiments, the nozzle plate **20** can have different positions and orientations with respect to the tape member **18**, or be formed from the tape member **18**, while still falling within the spirit and scope of the present invention.

In the illustrated embodiment of FIG. **1**, the tape member **18** is coupled to one side **24** of the housing **12** and the bottom surface **11** of the nosepiece **13**, although in other embodiments the tape member **18** can be coupled to any other side or sides of the print head **10** enabling electrical connection between the chip **20** and the printer controller **30** (described below).

In some embodiments, the tape member **18** includes a plurality of conductive traces **17** that connecting the chip **16** (or various components included in the chip **16**) to another circuit or device. For example, in some embodiments, each conductive trace **17** directly or indirectly connects at one end to an actuator, such as a heating element **32** or a piezo element (not shown), of the chip **16** and terminates at an opposite end at a contact pad **28**. The contact pads **28** can be positioned to mate with or otherwise electrically connect to corresponding contacts on a carriage (not shown) for communication between a microprocessor-based printer controller **30** and components of the print head **10** (e.g., the heating elements **32**). To be positioned in this manner in some embodiments, the contact pads **28** extend through the tape member **18** to the outer surface **29** of the tape member **18**. In other embodiments, the contact pads **28** can be positioned on the tape member **18** in other manners enabling electrical connection to another circuit or device. In those embodiments of the present invention having a tape member **18**, the tape member **18** can be formed of a variety of polymers or other materials capable of providing or carrying conductive traces **17** to electrically couple the nozzle portion **15** of the print head **10** to the contact pads **28** and the printer controller **30**.

In other embodiments, the nozzle portion **15** of the print head **10** can be electrically coupled to another circuit or device without the use of a tape member **18** as described above. By way of example only, conductive traces **17** can be provided on a surface of the housing **12**, and can extend between the chip **16** and contact pads **28** on the housing **12**. As another example, any type and number of wires or other electrical leads can be coupled to the chip **16** and to one or more electrical connectors (e.g., pins, sockets, pads, and the like) on the print head **10**, wherein the electrical connectors are adapted to be electrically coupled to another circuit or device (e.g., the printer controller **30**). Still other manners of electrically coupling the nozzle portion **15** of the print head **10** and contact pads **38** or other electrical connectors are possible, and fall within the spirit and scope of the present invention.

FIG. **2** illustrates an exploded view of the nozzle portion **15** of the print head **10** illustrated in FIG. **1**. The nozzle portion **15** includes the chip **16**, which in some embodiments defines an aperture **31**. The chip **16** also includes a surface **33** and one or more heating elements **32**. The heating elements **32** can be positioned on the surface **33** in any manner, such as by being coupled to the surface **33**, printed on the surface **33**, embedded within the surface **33** and chip **16**, and the like. The nozzle portion **15** can further include the nozzle plate **20** coupled to the chip **16**. When assembled, the surface **33** of the chip **16** is positioned substantially over the nozzle plate **20** (with reference to the orientation of the print head **10** as shown in FIG. **2**).

Some embodiments of the present invention have a film **34** covering at least a portion of the chip **16**. The film **34** can be positioned to protect circuitry of the chip **16** (e.g., components on the chip **16** necessary to maintain electrical connection between the heating element **32** and the printer controller **30**) from corrosive properties of the ink. The film **34** can include an aperture **36** that corresponds with the aperture **31** of the chip **16**, and can include one or more other apertures **37** corresponding to the heating elements **32** for purposes that will be described in greater detail below. The chip **16** and the film **34** (if used) are coupled to the housing **12** such that the apertures **31** and **36** collectively define an ink via, and fluidly communicate with the ink reservoir **14**.

With continued reference to FIG. **2**, in some embodiments the nozzle plate **20** includes a recess **40** in fluid communication with the ink reservoir **14** via the apertures **31** and **36** of the chip **16** and the film **34**, respectively. The nozzle plate **20** can further include a plurality of channels **42**, each channel **42** extending to a respective chamber **44** and in fluid communication with a respective nozzle **22**. Any portion of at least one of the recess **40**, a channel **42**, a chamber **44**, and a nozzle **22** can be collectively referred to as "flow features." In some embodiments, the nozzle plate **20** can include more or fewer channels **42** and chambers **44** than shown in the illustrated embodiments. In some embodiments, one or more channels **42** can connect (e.g., flow) to multiple chambers **44**. Also, the chambers **44** and/or channels **42** can be different in size, shape and/or uniformity in other embodiments of the present invention.

Ink can travel (e.g., by gravity and/or capillary action) from the ink reservoir **14** in the housing **12** through the apertures **31** and **36**, into the recess **40**, into the plurality of channels **42**, and into the plurality of chambers **44**.

In some embodiments of the present invention, the heating elements **32** are positioned on the chip **16** adjacent the chambers **44**. In some embodiments, the heating elements **32** can include any element capable of converting electrical energy into heat, such as a transducer or resistor. For example, in some embodiments (including the embodiment illustrated in FIGS. **1** and **2**), the heating elements **32** can be thin-film resistors. Electrical signals sent from the printer controller **30** to the heating elements **32** (e.g., via the conductive traces **17** of the tape member **18**) can heat the heating elements **32** and vaporize ink in the chambers **44**.

In the illustrated embodiment of FIGS. **1** and **2**, the heating elements **32** are exposed to the chambers **44** through the apertures **37** in the film **34** (if used). As a result, when one or more electrical signals are sent from the printer controller **30** to actuate (e.g., heat) a heating element **32**, the heating element **32** heats a thin layer of ink in the adjacent chamber **44**, thereby vaporizing a volatile component of the ink and ejecting a portion of the ink occupying the chamber **44** out of the adjacent nozzle **22** in the form of an ink droplet (or drop), which can strike a desired location of a printing medium. The chamber **44** can subsequently refill with ink (e.g., by capillary action) in order to prime the chamber **44** for subsequent printing.

A portion of the inkjet print head **10**, particularly the substrate (e.g., chip) **16**, is illustrated in FIGS. **3** and **4**. In the illustrated embodiments, the heating elements **32** are arranged into a first heating array **50** and a second heating array **52**. In other embodiments (not shown), the heating elements **32** can be arranged in more or fewer arrays than shown in the illustrated embodiment. The arrays **50** illus-

trated in FIGS. **3** and **4** are each a row of heating elements **32**. However, in other embodiments, the heating elements **32** can be located in other manners, such as in blocks, in staggered arrangements, or in any other regular or irregular manner.

The chip **16** illustrated in both embodiments of FIGS. **3** and **4** further includes control circuits **56** for controlling and activating the heating elements **32**. Any number of control circuits **56** can be used for this purpose, each of which can control and activate any number of heating elements **32**. In the illustrated embodiments of FIGS. **3** and **4**, for example, two control circuits **56** are used, each of which controls an array **50** of heating elements **32**. In other embodiments, a single control circuit **56** controls and activates all of the heating elements **32**. In still other embodiments, multiple control circuits **56** perform this function, each controlling and activating one or more heating elements **32**.

In some embodiments, the control circuit **56** can include one or more field effect transistors (FETs) activating one or more heating elements **32**. For example, the control circuit **56** can include a power FET for each heating element **32**. In other embodiments, the chip **16** can include a control circuit **56** for each heating array **50** or **52**, and each control circuit **56** can include a bank of power FETs (not shown), one FET for each heating element **32** of the array **50** or **52**. In the illustrated embodiments of FIGS. **3** and **4**, the chip **16** includes a first control circuit **58** for activating the first heating array **50** and a second control circuit **60** for activating the second heating array **52**.

The chip **16** further includes at least one temperature sense element positioned to sense a temperature of a location on the print head **10**. In some embodiments, the temperature sense element is or comprises a temperature sense resistor (TSR) **64**. The TSR **64** can include a polysilicon material or another material responsive to temperature. For example, the TSR **64** can include a N-type source drain (NSD) material, a N-well layer material, a P-type source drain (PSD) material, a lightly doped drain (LDD) material or another suitable material. In some embodiments, the TSR **64** can be approximately 0.05 μm to approximately 5000 μm wide, by approximately 0.01 μm to approximately 400,000 μm long, by approximately 0.05 μm to approximately 4 μm thick.

In some embodiments, the TSR **64** senses the temperature of the chip **16**, one or more of the heating elements **32**, the ink chamber **44**, or other location of the print head **10** and provides this information to the printer controller **30** or another circuit. The printer controller **30** or other circuit can use the temperature information provided by the TSR **64** when configuring activation of the heating elements **32**. In some embodiments, the TSR **64** is positioned such that the TSR **64** is in close proximity to one or more of the heating elements **32** without disrupting ink flow. In other words, the TSR **64** is not located in a position that would compromise ink flow from the ink via **68** through the channels **42** to the ink chamber **44**. The via **68**, one of the channels **42**, and one of the ink chambers **44** is shown in dashed lines in FIGS. **3** and **4**.

In the embodiment illustrated in FIG. **3**, a first TSR **70** is located between the first control circuit **58** and the first heating array **50**, and is in a position away from the fluid flow paths (e.g., the paths from ink via **68** through channel **42** to ink chamber **44** as described above), and a second TSR **72** is placed between the second control circuit **60** and the second heating array **52**, and is also in a position away from the fluid flow paths. The positions of the first TSR **70** and the second TSR **72** enable the TSRs **70**, **72** to be located in relatively close proximity to the heating elements **32** without detrimental topography effects to fluid flow compared to other positions (e.g., on the opposite side of the heating elements **32**, where the TSRs **70**, **72** would otherwise overlap the fluid flow paths).

As is seen, the TSR's **70**, **72** have a longitudinal extent that is substantially parallel along and to an entire length of arrays **50**, **52**, respectively, such as between individual heating elements **32-1** and **32**-n. In turn, the array of actuators substantially parallel the longitudinal extent of the ink via **68** on either sides **71**, **73** thereof, so that each of the ink chambers **44** and ink channels **42** can be respectively of nearly uniform size and shape and have commonality all along a length of the via. Also, the TSR's have a fairly straight length along the length of the arrays that extends beyond terminal ends **67**, **69** of the ink via and beyond a length of the arrays. In this manner, each TSR is able to sense local heating per an entire array and not just a portion thereof. Also, the ink via itself acts as a thermal insulator between each array **50**, **52** so that temperature readings of TSR's **70**, **72** are not unduly influenced by heating elements **32** on an opposite side of the ink via. Beyond the array, TSR's **70**, **72** bend orthogonally to its longitudinal extent at positions **75**, **77**so that it can be directed at positions **79**, **81** around the control circuitry **56** and away from the arrays. In no instance, however, do the TSR's overlap the fluid flow paths or flow features, as before. Appreciating the chip **16** is formed as many layers, the lack of overlap between the TSR's and the fluid flow paths or features occurs in either of the vertical directions of the chip such as into or away from the paper of the figure according to traditional arrow symbols ⊙ (into) or ⊕ (away). There is vertical overlap, however, between the TSR's **70**, **72** and one or more electrical traces **85**, **87**, as is seen, that electrically connect the control circuits **56** to either of the arrays **50**, **52**.

In the embodiment illustrated in FIG. **4**, the first TSR **70** is positioned beneath the first heating array **50**, and the second TSR **72** is positioned beneath the second heating array **52**. In other words, the first TSR **70** and the second TSR **72** can be embedded into the chip **16**. In some embodiments, the TSR **64** is embedded into the chip **16** such that the TSR **64** is still adjacent the surface **33** of the chip **16**, and may or may not be positioned over one or more ink chambers **44** or one or more ink channels **42**. In some embodiments, a thin layer (not shown) of the substrate **16** can separate the TSR **64** and any overlapping ink channels **42** or ink chambers **44**, which can eliminate topography issues presented from placing a TSR **64** directly over an ink channel **42** or chamber **44**. In the embodiment of FIG. **4**, the TSR **70** includes an implanted material in the chip **16**, such as, for example, a NSD material, a PSD material or a N-well material. Implanted TSRs **64** can be used without presenting any topography issues that can effect fluid flow as described above.

In other embodiments (not shown), the chip **16** can include more or fewer TSRs **64** than the embodiments illustrated in FIGS. **3** and **4**. For example, the chip **16** can include a dedicated TSR **64** located as described above for each heating element **32**, or can include one TSR **64** located as described above for multiple heating elements **32**. In some embodiments, the chip **16** can also include various combinations of different positions of TSRs **64**. For example, a chip **16** can include a TSR **64** positioned between the control circuit **56** and the heating elements **32**, away from the fluid flow paths (as shown in FIG. **3**) as well as one or more implanted TSRs **64** positioned beneath one or more heating elements **32** (as shown in FIG. **4**).

In some embodiments, (not shown), the chip **16** can include additional heating elements **32** dedicated to heating the substrate (e.g., chip **16**) as opposed to the ink in the ink chambers **44**. The chip **16** can further include one or more TSRs **64** for providing temperature readings for these additional substrate heating elements. In still further embodiments (not shown), the heating arrays **50** and **52** can further include one or more substrate heating elements (e.g., heating elements dedicated to heating the substrate as opposed to an ink chamber) in addition to the heating elements **32** heating the ink chambers **44**.

The embodiments described above and illustrated in the figures are presented by way of example only and are not intended as a limitation upon the concepts and principles of the present invention. As such, it will be appreciated by one having ordinary skill in the art that various changes in the elements and their configuration and arrangement are possible without departing from the spirit and scope of the present invention as set forth in the appended claims. For example, the present invention can be used in conjunction with inkjet print heads **10** having shapes that are different than that shown in FIG. **1** (e.g., print heads **10** not having a nozzle portion **13** shaped as shown, print heads **10** having other dimensions and features, and the like).

The invention claimed is:

1. An inkjet print head including a substrate, comprising:

an ink via having a longitudinal extent;

an array of actuators substantially paralleling the longitudinal extent of the ink via, each of the actuators positioned proximate to a surface of the substrate;

a control circuit coupled to the array of actuators for controlling the each of the actuators; and

a temperature sense element positioned substantially between the array of actuators and the control circuit, the temperature sense element having a longitudinal extent that is substantially parallel along and to an entire length of the array of actuators.

2. The inkjet print head as set forth in claim **1**, and further comprising a plurality of ink chambers, each ink chamber being in fluid communication with an ink reservoir, and the plurality of ink chambers and the ink reservoir form a plurality of fluid flow paths;

a plurality of actuators in the array positioned proximate the surface, said each actuator positioned to eject a portion of ink from a respective one of the plurality of ink chambers; and

wherein the control circuit is coupled to the plurality of actuators for controlling each of the plurality of actuators and the temperature sense element has no vertical overlap with the fluid flow paths.

3. The inkjet print head as set forth in claim **2**, and further comprising a plurality of temperature sense elements, each temperature sense element positioned substantially between at least one of the plurality of actuators and the control circuit.

4. The inkjet print head as set forth in claim **3**, and wherein the control circuit includes a plurality of field effect transistors, each field effect transistor is coupled to one of the plurality of actuators for controlling the actuators.

5. The inkjet print head as set forth in claim **2**, and wherein the control circuit includes a plurality of field effect transistors, each field effect transistor is coupled to one of the plurality of actuators for controlling the actuators.

6. The inkjet print head as set forth in claim **1**, and further comprising

a second array of actuators,

a second control circuit coupled to the second array of actuators for controlling each of the actuators in the second array; and

a second temperature sense element positioned substantially between the second array of actuators and the second control circuit.

7. The inkjet print head as set forth in claim **1**, and wherein the temperature sense element comprises a polysilicon material.

8. The inkjet print head as set forth in claim **7**, and wherein the temperature sense element comprises one of a N-type source drain (NSD) material, a N-well layer material, a P-type source drain (PSD) material and a lightly doped drain (LDD) material.

9. An inkjet print head comprising:

a first plurality of heating elements forming a first heating array, the first heating array positioned to heat ink in at least a portion of a first plurality of ink chambers;

a second plurality of heating elements forming a second heating array, the second heating array positioned to heat ink in at least a portion of a second plurality of ink chambers;

a first control circuit coupled to the first heating array for controlling the first heating array;

a second control circuit coupled to the second heating array for controlling the second heating array;

a first temperature sense element positioned substantially between the first heating array and the first control circuit; and

a second temperature sense element positioned substantially between the second heating array and the second control circuit, each of the first and second temperature sense elements having a longitudinal extent that is substantially parallel along and to a respective entire length of the first and second heating arrays.

* * * * *