Trials@uspto.gov
571-272-7822

Paper 28
Date: July 30, 2024

UNITED STATES PATENT AND TRADEMARK OFFICE

BEFORE THE PATENT TRIAL AND APPEAL BOARD

CANON U.S.A., INC. and CANON INC.,
Petitioner,

v.

SLINGSHOT PRINTING LLC,
Patent Owner.

IPR2023-00313
Patent 7,594,708 B2

Before JO-ANNE M. KOKOSKI, GARTH D. BAER, and
JOHN D. HAMANN, *Administrative Patent Judges*.

HAMANN, *Administrative Patent Judge*.

JUDGMENT
Final Written Decision
Determining All Challenged Claims Unpatentable
35 U.S.C. § 318(a)

I. INTRODUCTION

In this *inter partes* review, instituted pursuant to 35 U.S.C. § 314 (2018), Canon U.S.A., Inc. and Canon Inc. (collectively "Petitioner") challenge the patentability of claims 1–15 ("the challenged claims") of U.S. Patent No. 7,594,708 B2 (Ex. 1001, "the '708 patent"), owned by Slingshot Printing LLC ("Patent Owner"). We have jurisdiction under 35 U.S.C. § 6. This Final Written Decision is entered pursuant to 35 U.S.C. § 318(a) and 37 C.F.R. § 42.73 (2023). For the reasons discussed herein, we determine that Petitioner shows by a preponderance of the evidence that the challenged claims are unpatentable.

A. Procedural History

Petitioner filed a Petition requesting *inter partes* review of the challenged claims of the '708 patent. Paper 2 ("Pet."). Patent Owner filed a Preliminary Response. Paper 5. We instituted *inter partes* review of the challenged claims on the grounds raised in the Petition. Paper 6 ("Dec. on Inst."), 43.

Following institution, Patent Owner filed a Response to the Petition. Paper 9 ("PO Resp."). Petitioner filed a Reply to Patent Owner's Response. Paper 12 ("Pet. Reply"). Patent Owner filed a Sur-reply to Petitioner's Reply. Paper 17 ("PO Sur-reply").

An oral hearing was held on May 9, 2024. A transcript of the oral hearing is included in the record. Paper 27.

B. Real Parties-In-Interest

The parties identify themselves as the real parties-in-interest. Pet. 1; Paper 4, 1.

C. Related Matter

The parties identify *Slingshot Printing LLC v. Canon U.S.A., Inc.*, No. 2:22-cv-001852 (E.D.N.Y.) as a matter that may affect, or be affected by, a decision in this proceeding. Pet. 1; Paper 4, 2.

D. The Challenged Patent

The '708 patent relates "to printing devices, and more particularly to methods and apparatuses for sensing temperature of multi-via heater chips." Ex. 1001, 1:15–17. As background, the '708 patent provides that "[a] number of printers, copiers, and multi-function products utilize heater chips in their printing heads for discharging ink drops," where "[t]he ink is supplied through one or more ink vias in the chip." *Id.* at 1:21–24. According to the '708 patent, "[t]hese heater chips typically provide only one heater array for each ink via that is disposed along one side of the ink via." *Id.* at 1:24–26. "However, the traditional use of single heater array on a single side of an ink via limits the achievable printing resolution, including the vertical resolution," according to the '708 patent. *Id.* at 1:38–40.

"Additionally, for proper functionality, inkjet heater chips need to monitor and maintain the silicon substrate of the heater chip at an acceptable temperature for printing." *Id.* at 1:48–50. "A thermal sense resistor (TSR) is typically used to sense the temperature of the silicon substrate," according to the '708 patent. *Id.* at 1:56–57. For example, the '708 patent describes a prior art "metal serpentine temperature sense resistor[, which] is routed around the periphery of the heater chip and provides an average temperature of the entire die." *Id.* at 1:57–62, Fig. 1 (identifying the figure as prior art). "This average measurement provides no discrimination between individual colors and does not provide any feedback on temperature differences

between one area of the heater chip versus another," according to the '708 patent. *Id.* at 1:62–65.

The '708 patent also describes a prior art improvement on the serpentine temperature sensor. *Id.* at 2:1–2, Figs. 1–2. In particular, the '708 patent discloses that it was known to provide temperature sensing on a per color basis by placing TSRs "in close proximity to each of the heater arrays, each situated on the same side of their respective ink vias." *Id.* at 2:1–5, Fig. 2 (identifying the figure as prior art).

In addition, the '708 patent discloses that "ink vias . . . act as a thermal barrier between the colors," and that "[a]ll the thermal heater arrays . . . are situated on only one side of their respective ink vias, ensuring that there is only a small amount of thermal crosstalk between the temperature sense resistors." *Id.* at 2:11–15, Fig. 2. "Once the temperature within the heater chip is measured, the temperature can be maintained and regulated at an acceptable temperature for printing." *Id.* at 2:16–18.

The '708 patent states that "it is desirable to position heater arrays on both sides of the ink vias, which allow the ink vias to provide smaller ink drops in order to achieve higher printing resolutions." *Id.* at 1:44–47. However, "[w]hen a heater array is positioned on both sides of an ink via[], the temperature sensing and regulating devices utilized in the prior art do not provide adequate thermal control," according to the '708 patent. *Id.* at 2:36–38. And thus, "there is a need in the industry for heater chips that can provide for monitoring and regulating the various regions of a heater chip at a desired temperature when heater arrays are placed on both sides of the ink vias," according to the '708 patent. *Id.* at 2:51–54.

In response, the '708 patent discloses embodiments in accordance with its teachings that position heater arrays on both sides of the ink vias. *See, e.g.*, *id.* at 4:61–5:9, Fig. 3. "It will be appreciated that the placement of a single via in between two heater arrays presents a challenge in attempting to sense the temperature of individual colors," according to the '708 patent. *Id.* at 5:35–37. In particular, "[i]f there is a single TSR associated with each heater array . . . , then two TSRs will be placed next to each other between adjacent ink vias." *Id.* at 5:37–40. The '708 patent discloses that if a print job is heavy in a color and light in an adjacent color, the thermal energy generated by the color's heaters would rapidly couple through the common silicon to the adjacent color's TSR positioned in between the colors' ink vias, providing a false high reading for the adjacent color. *Id.* at 5:44–48. "Rather than try to sense temperature on a per color basis with TSR's in close proximity to heaters, the ['708 patent] senses temperature by silicon region." *Id.* at 5:48–51. Figure 4, shown below, illustrates this approach. *Id.* at 4:28–30.

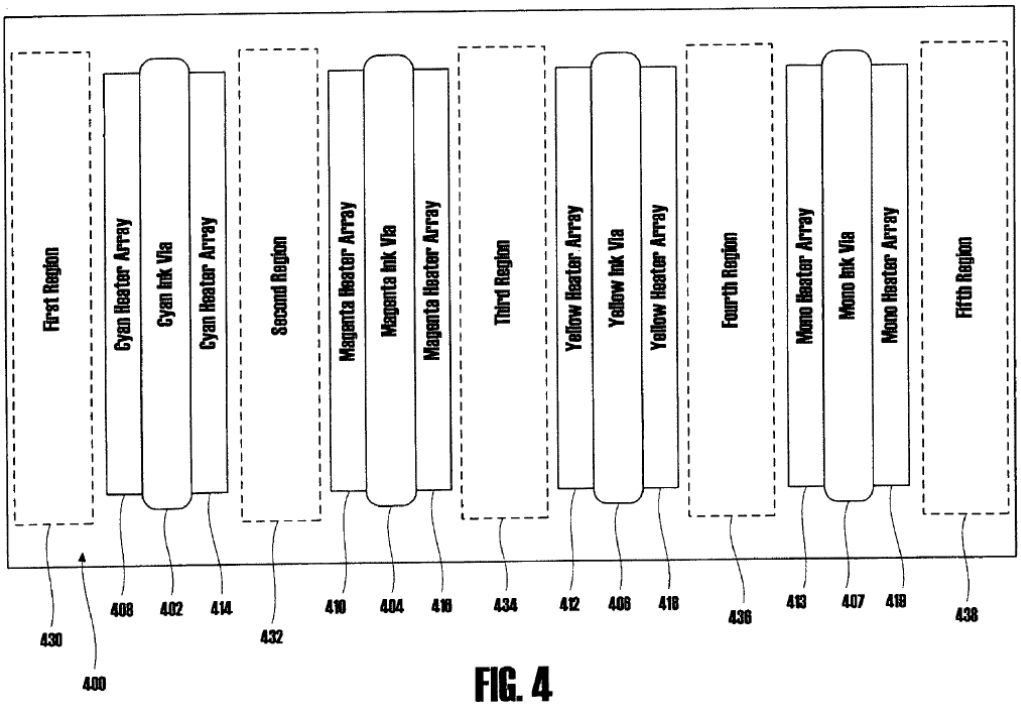

FIG. 4

Figure 4 "illustrates an exemplary configuration for a heater chip 400 having thermal regions defined between the ink vias, according to one embodiment of the" '708 patent. *Id.* at 5:55–58. As illustrated, "a first region 430 is defined as the area between the left edge of the heater chip 400 and the cyan ink via 402; a second region 432 is defined as the area between the cyan ink via 402 and the magenta ink via 404, a third region 434 is defined as the area between the magenta ink via 404 and the yellow ink via 406; a fourth region 436 is defined as the area between the yellow ink via 406 and the mono ink via 407; and a fifth region 438 is defined as the area between the mono ink via 407 and the right edge of the heater chip 400." *Id.* at 5:58–67. Also illustrated are heater arrays 408 and 414; 410 and 416; 412 and 418; and 413 and 419 positioned on both sides of their respective ink vias 402, 404, 406, and 407. *See id.* at 6:4–6, Fig. 4.

The '708 patent discloses that the "temperature of the heater chip 400 is measured on a per thermal region basis," with "[a] temperature sensing

element [being] placed in each of the thermal regions." *Id.* at 6:20–25. "Due to the relative high thermal conductivity of the silicon substrate, each of the thermal regions 430, 432, 434, 436, 438 have a very uniform temperature across the width of that region," according to the '708 patent. *Id.* at 6:58–61. Thus, for example, "[a] temperature reading from the second region 432 represents the temperature of both the magenta and cyan heater arrays 414 and 410 in the second region." *Id.* at 7:2–5. And the '708 patent discloses that "[t]he ink vias 402, 404, 406, 407 . . . act as thermal insulators between the thermal regions 430, 432, 434, 436, 438." *Id.* at 6:64–67. The '708 patent discloses that "each thermal region can be regulated at its optimal operating temperature." *Id.* at 8:9–10.

E. Illustrative Claim

Of the challenged claims, claims 1 and 9 are independent. Claim 1 is illustrative of the challenged claims and is reproduced below.

> 1. A chip for use with a printing device, comprising:
>
> a plurality of ink vias arranged parallel to one another, each of the ink via having two longitudinal sides;
>
> a heater array disposed adjacent each longitudinal side of the ink vias such that each ink via is associated with two heater arrays disposed adjacent the two longitudinal sides of the ink via;
>
> a region disposed adjacent each heater array, wherein only one region is disposed between two adjacent ink vias and wherein the region disposed between two adjacent ink vias includes two heater arrays each heater array being associated with their respective ink via; and
>
> a single temperature sensing element disposed within each region, the temperature sensing element operable to sense a temperature representative of the heater arrays adjacent to the region and disposed at a predetermined distance away from adjacent heater arrays.

Ex. 1001, 8:23–39.

F. Instituted Grounds of Unpatentability

We instituted trial based on the following grounds of unpatentability, which are all the grounds raised in the Petition:

Claim(s) Challenged	35 U.S.C. §[1]	Reference(s)/Basis
1–3, 5–12, 14, 15	103(a)	Benjamin,[2] Giere673[3]
4, 13	103(a)	Benjamin, Giere673, Parish[4]
1–3, 5–12, 14, 15	103(a)	Giere178[5]
1–3, 5–12, 14, 15	103(a)	Giere178, Yabe[6]
4, 13	103(a)	Giere178, Parish
4, 13	103(a)	Giere178, Yabe, Parish

Pet. 3, 8–105. Petitioner submits in support of its arguments the Declaration of Stephen F. Pond (Ex. 1002). Patent Owner submits in support of its arguments the Declaration of Steven J. Dietl (Ex. 2003).

II. LEVEL OF ORDINARY SKILL IN THE ART

To determine whether an invention would have been obvious at the time it was made, we consider the level of ordinary skill in the pertinent art at the time of the invention. *Graham v. John Deere Co.*, 383 U.S. 1, 17 (1966). In assessing the level of ordinary skill in the art, various factors may be considered, including the "type of problems encountered in the art; prior art solutions to those problems; rapidity with which innovations are

[1] The Leahy-Smith America Invents Act ("AIA") included revisions to 35 U.S.C. § 103 that became effective on March 16, 2013. Because the '708 patent issued from an application filed before March 16, 2013, we apply the pre-AIA version of this basis for unpatentability.
[2] US 7,384,113 B2, issued June 10, 2008 (Ex. 1004, "Benjamin").
[3] US 6,612,673 B1, issued Sept. 2, 2003 (Ex. 1005, "Giere673").
[4] US 7,163,272 B2, issued Jan. 16, 2007 (Ex. 1006, "Parish").
[5] US 6,565,178 B1, issued May 20, 2003 (Ex. 1007, "Giere178").
[6] US 6,527,367 B2, issued Mar. 4, 2003 (Ex. 1008, "Yabe").

made; sophistication of the technology; and educational level of active workers in the field." *In re GPAC, Inc.*, 57 F.3d 1573, 1579 (Fed. Cir. 1995) (citing *Custom Accessories, Inc. v. Jeffrey-Allan Indus., Inc.*, 807 F.2d 955, 962–63 (Fed. Cir. 1986)). "[O]ne or more factors may predominate." *Id.*

In our Decision on Institution, we adopted the definition Petitioner proposes for one having ordinary skill in the art at the time of the invention of the '708 patent. Dec. on Inst. 9. Namely, we found that one of ordinary skill in the art would have had "a Bachelor's or Master's level college degree in Mechanical Engineering, Materials Science, Physics, Electrical Engineering, or a related field, and two years of training or experience in the design of inkjet printheads or semiconductor circuit layout." *Id.* at 8 (quoting Pet. 6 (citing Ex. 1002 ¶ 108)).

Patent Owner "does not dispute this characterization of the level of ordinary skill in the art . . . , except that [Patent Owner] disagrees that a degree in Materials Science is sufficient." PO Resp. 31–32 (citing Ex. 2003 ¶¶ 32–34). Patent Owner does not explain its basis for this disagreement, or how the disagreement relates to Petitioner's proposal, which requires, *inter alia*, "two years of training or experience." *Id.*; Pet. 6.

Because Petitioner's definition of the level of skill in the art is consistent with the '708 patent and the asserted prior art, we maintain it for purposes of this Final Written Decision. *See Okajima v. Bourdeau*, 261 F.3d 1350, 1355 (Fed. Cir. 2001); *In re GPAC*, 57 F.3d at 1579; *In re Oelrich*, 579 F.2d 86, 91 (CCPA 1978).

III. CLAIM CONSTRUCTION

Because the Petition was filed after November 13, 2018, we apply the same claim construction standard that would be used in a civil action under

35 U.S.C. § 282(b), following the standard articulated in *Phillips v. AWH Corp.*, 415 F.3d 1303 (Fed. Cir. 2005) (en banc). 37 C.F.R. § 42.100(b) (2019); 83 Fed. Reg. 51,340, 51,340–41, 51,343 (Oct. 11, 2018). In applying such standard, claim terms are generally given their ordinary and customary meaning, as would be understood by a person of ordinary skill in the art, at the time of the invention and in the context of the entire patent disclosure. *Phillips*, 415 F.3d at 1312–13. "In determining the meaning of the disputed claim limitation, we look principally to the intrinsic evidence of record, examining the claim language itself, the written description, and the prosecution history, if in evidence." *DePuy Spine, Inc. v. Medtronic Sofamor Danek, Inc.*, 469 F.3d 1005, 1014 (Fed. Cir. 2006) (citing *Phillips*, 415 F.3d at 1312–17).

Petitioner provides a proposed construction for the term "adjacent." Pet. 6–8. In particular, Petitioner argues that "'adjacent' means 'next to and can include,' such that a region disposed 'adjacent' each heater array can also 'include' that adjacent heater array." *Id.* at 7–8 (footnote omitted). Petitioner argues that its proposed construction "is consistent with the '708 [p]atent specification describing 'heaters within each region.'" *Id.* at 8 (citing Ex. 1001, 7:45–50).

Patent Owner disagrees that a construction is required, and argues "that 'adjacent' carries its plain and ordinary meaning throughout the claims." PO Resp. 32–33. Patent Owner argues that Petitioner parses the claims incorrectly. *Id.* According to Patent Owner, the claims recite "a region disposed adjacent [a] pair of heater arrays . . . which is part of a broader region disposed between two adjacent ink vias," and that "[i]t is the broader 'region ***disposed between two adjacent ink vias*** [that] includes two

heater arrays.'" *Id.* at 32 (third alteration in original). "Thus, the claims do not say that the region disposed adjacent two heater arrays also includes the two heater arrays," according to Patent Owner. *Id.* at 33. Patent Owner argues that "Petitioner['s] proposed construction of 'adjacent' to mean 'next to and can include' is not necessary to a proper understanding of the scope and meaning of" the claims, and "does not reflect the ordinary meaning of 'adjacent.'" *Id.*

We agree with Patent Owner. In particular, we agree that claim 1, for example, recites a region disposed adjacent a pair of heater arrays which is part of a broader region disposed between two adjacent ink vias, and it is the broader region that includes the two heater arrays. Ex. 1001, 8:31–35. We also agree that Petitioner's proposed construction for adjacent (i.e., "next to and can include") does not reflect the plain and ordinary meaning of adjacent. Rather, we conclude that the term "adjacent" should be afforded its plain and ordinary meaning (e.g., next to) in light of the claim language and intrinsic evidence.

As we discuss below, Petitioner's showing for claim 1 is consistent with the plain and ordinary meaning of "adjacent." *See infra* Section V.C. We determine that no further constructions are needed for us to render our Final Written Decision. *See, e.g.*, *Nidec Motor Corp. v. Zhongshan Broad Ocean Motor Co.*, 868 F.3d 1013, 1017 (Fed. Cir. 2017) (quoting *Vivid Techs., Inc. v. Am. Sci. & Eng'g, Inc.*, 200 F.3d 795, 803 (Fed. Cir. 1999)) ("[W]e need only construe terms 'that are in controversy, and only to the extent necessary to resolve the controversy.'").

IV. GENERAL PRINCIPLES OF LAW

"In an [*inter partes* review], the petitioner has the burden from the onset to show with particularity why the patent it challenges is unpatentable." *Harmonic Inc. v. Avid Tech., Inc.*, 815 F.3d 1356, 1363 (Fed. Cir. 2016) (citing 35 U.S.C. § 312(a)(3) (requiring *inter partes* review petitions to identify "with particularity . . . the evidence that supports the grounds for the challenge to each claim")). This burden of persuasion never shifts to Patent Owner. *See Dynamic Drinkware, LLC v. Nat'l Graphics, Inc.*, 800 F.3d 1375, 1378 (Fed. Cir. 2015) (discussing the burden of proof in *inter partes* review).

A claim is unpatentable under 35 U.S.C. § 103(a) if the differences between the claimed subject matter and the prior art are such that the subject matter, as a whole, would have been obvious at the time of the invention to a person having ordinary skill in the art. *KSR Int'l Co. v. Teleflex, Inc.*, 550 U.S. 398, 406 (2007). The question of obviousness is resolved on the basis of underlying factual determinations, including: (1) the scope and content of the prior art; (2) any differences between the claimed subject matter and the prior art; (3) the level of ordinary skill in the art; and (4) objective evidence of non-obviousness, if present.[7] *See Graham*, 383 U.S. at 17–18. When evaluating a claim for obviousness, we also must "determine whether there was an apparent reason to combine the known elements in the fashion claimed by the patent at issue." *KSR*, 550 U.S. at 418 (citing *In re Kahn*, 441 F.3d 977, 988 (Fed. Cir. 2006)).

[7] Patent Owner does not present arguments or evidence of such objective evidence of non-obviousness. *See generally* PO Resp.

V. ALLEGED OBVIOUSNESS OVER BENJAMIN AND GIERE673

Petitioner argues that the combination of Benjamin and Giere673 renders claims 1–3, 5–12, 14, and 15 obvious. Pet. 8–42. For the reasons that follow, we determine that Petitioner shows by a preponderance of the evidence that the combination of Benjamin and Giere673 renders these claims obvious.

A. Summary of Benjamin

Benjamin is titled "Fluid Ejection Device with Address Generator." Ex. 1004, code (54). Benjamin teaches "[a] fluid ejection device having firing cells, signal lines configured to receive a series of pulses, and an address generator configured to receive pulses from the series of pulses and generate a set of address signals in response to the received pulses,[] wherein the set of address signals is adapted to enable the firing cells for activation." *Id.* at code (57).

B. Summary of Giere673

Giere673 is titled "System and Method for Predicting Dynamic Thermal Conditions of an Inkjet Printing System." Ex. 1005, code (54). Giere673 teaches "an inkjet printing system, having a substrate, a plurality of heating elements disposed on the substrate, an ink ejection assembly adjacent the substrate forming a plurality of ink ejection chambers, each chamber associated with a different one of the heating elements and a controller operatively connected to the heating elements, the controller receiving print data and processing the print data to predict thermal conditions of a subset of the ink ejection chambers for selectively operating the corresponding heating elements of the subset." *Id.* at code (57).

C. Challenged Claim 1

1. Chip for Use with a Printing Device (Preamble)

Claim 1's preamble recites "[a] chip for use with a printing device." Ex. 1001, 8:23. We agree with Petitioner and find that Benjamin teaches claim 1's preamble. Pet. 8–9.

More specifically, we find that Benjamin teaches that "inkjet printhead assembly 22 includes at least one printhead or printhead die 40 that ejects drops of ink through a plurality of orifices or nozzles 34 toward a print medium 36 so as to print onto print medium 36." Ex. 1004, 3:32–36. Benjamin teaches that a "properly sequenced ejection of ink from nozzles 34 causes characters, symbols, and/or other graphics or images to be printed upon print medium 36 as inkjet printhead assembly 22 and print medium 36 are moved relative to each other." *Id.* at 3:39–44.

In addition, we find persuasive Dr. Pond's testimony that the term "die" is another name for a chip, and thus, one of ordinary skill in the art "would have understood that the printhead die 40 used in Benjamin's printing system 20 is synonymous with the term 'chip for use with a printing device.'" Ex. 1002 ¶ 115. We find that this testimony is consistent with the cited art.

After reviewing Petitioner's arguments and evidence, which are not addressed by Patent Owner, we are persuaded that Petitioner shows that Benjamin teaches "[a] chip for use with a printing device." In light of our finding, we need not, and thus do not, reach whether claim 1's preamble is limiting.

2. Plurality of Ink Vias

Claim 1 further recites "a plurality of ink vias arranged parallel to one another, each of the ink via having two longitudinal sides." Ex. 1001, 8:24–25. We agree with Petitioner and find that Benjamin teaches this limitation. Pet. 10–13.

In particular, we agree with Petitioner and find that Benjamin teaches a plurality of ink vias, each having two longitudinal sides. More specifically, Benjamin teaches "[i]nk feed slot 46 includes opposing ink feed slot sides 46a and 46b," and that "[d]rop generators 60 are disposed along each of the opposing ink feed slot sides 46a and 46b." Ex. 1004, 5:51–55, Fig. 3. Benjamin's Figure 3 is shown below.

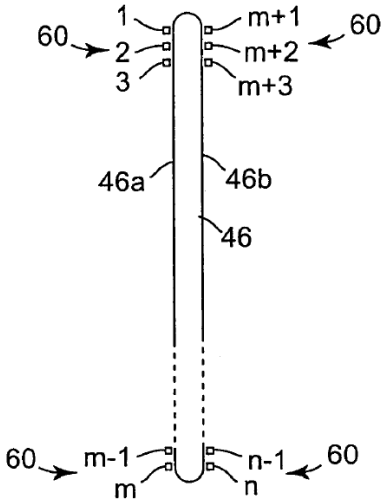

Fig. 3

Figure 3 "is a diagram illustrating drop generators 60 located along ink feed slot 46 in one embodiment of printhead die 40." *Id.* at 5:51–53. As illustrated, "drop generators 60 [are] located along ink feed slot side 46a, and . . . along ink feed slot side 46b." *Id.* at 5:55–58.

In addition, Benjamin teaches an embodiment of a printhead die having three ink fluid feed sources. *Id.* at 64:53–56, Fig. 21. In particular,

Benjamin teaches printhead die 1700 having "ink feed slots 1704, 1706 and 1708 [which] are located parallel to one another and each ink feed slot 1704, 1706 and 1708 includes a length that extends along the y-direction of printhead die 1700." *Id.* at 64:60–63; *see also id.* at 65:34–36, 66:37–39, 67:37–39 (teaching that each of the three ink feed slots include opposing sides that extend along the y-direction of the printhead die).

After reviewing Petitioner's arguments and evidence, which are not addressed by Patent Owner, we are persuaded that Petitioner shows that Benjamin teaches "a plurality of ink vias arranged parallel to one another, each of the ink via having two longitudinal sides."

3. Heater Array

Claim 1 further recites "a heater array disposed adjacent each longitudinal side of the ink vias such that each ink via is associated with two heater arrays disposed adjacent the two longitudinal sides of the ink via." Ex. 1001, 8:26–29. We agree with Petitioner and find that Benjamin teaches this limitation. Pet. 13–16.

In particular, we agree with Petitioner and find that Benjamin teaches heater arrays (single vertical rows of firing resistors) disposed adjacent each side of the ink vias and associated therewith. *Id.* at 16 (citing Ex. 1002 ¶ 132). Benjamin's Figure 21, as annotated by Petitioner, is shown below.

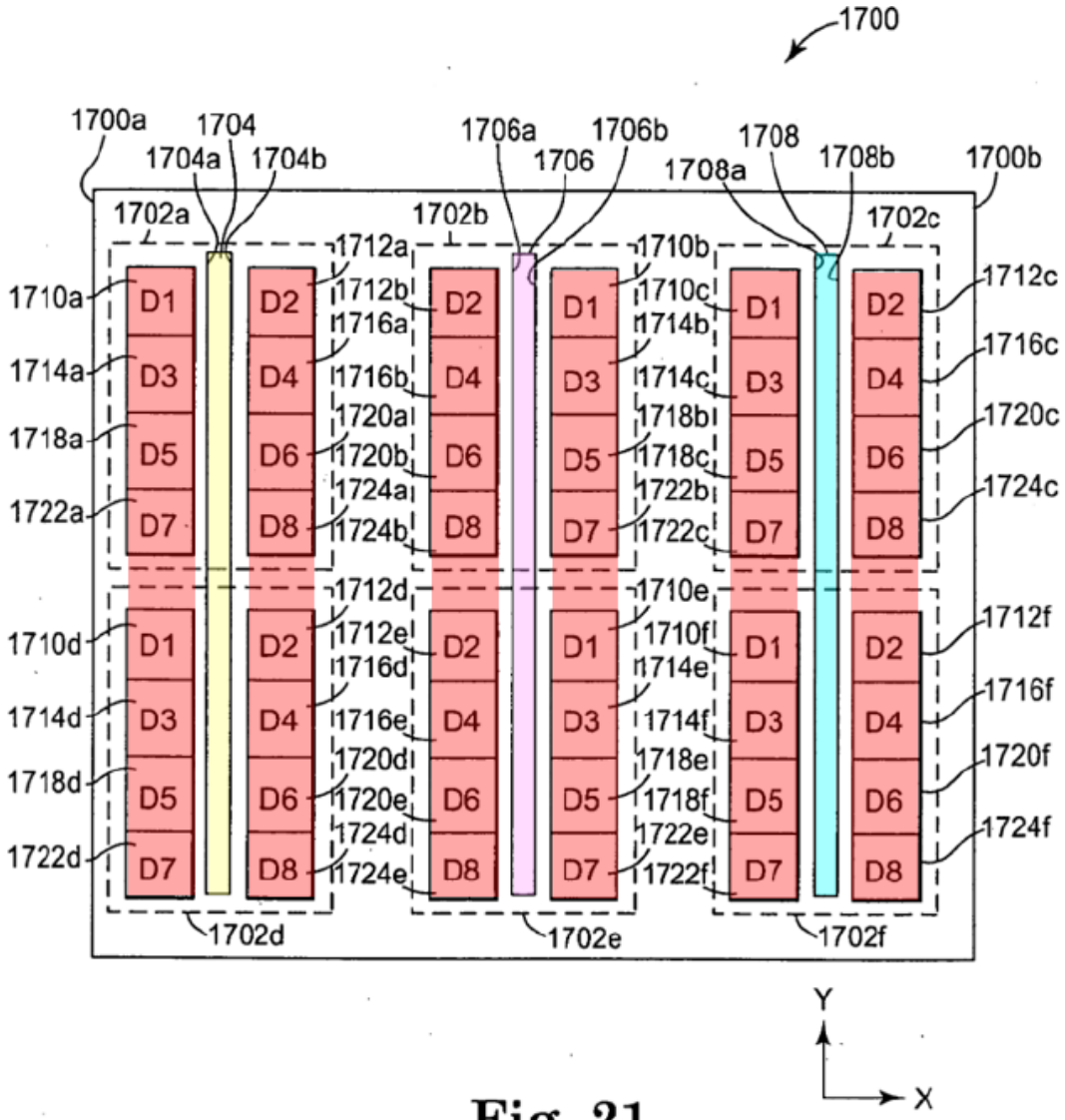

Fig. 21

Id. at 15 (annotating Ex. 1004, Fig. 21). Figure 21 "is a diagram illustrating an example layout of one embodiment of a printhead die 1700." Ex. 1004,

64:53–54. Petitioner annotates the figure by coloring ink via 1704 yellow, ink via 1706 magenta, and ink via 1708 cyan.[8] Pet. 15.

As illustrated, "[t]he printhead die 1700 includes six fire groups 1702*a*–1702*f* disposed along . . . [ink] feed slots 1704, 1706 and 1708." Ex. 1004, 64:54–57. More specifically, "[f]ire groups 1702*a* and 1702*d* are disposed along ink feed slot 1704, fire groups 1702*b* and 1702*e* are disposed along ink feed slot 1706 and fire groups 1702*c* and 1702*f* are disposed along ink feed slot 1708." *Id.* at 64:57–60. Figure 21 also depicts that "[t]he fire groups 1702*a*–1702*f* are [each] divided into eight data line groups, indicated at D1–D8." *Id.* at 65:5–6; Ex. 1002 ¶ 127. Petitioner annotates in red the data line groups D1–D8 for each fire group. Pet. 15 (annotating Ex. 1004, Fig. 21).

Benjamin teaches that "[e]ach data line group D1–D8 includes pre-charged firing cells 120 from each of the fire groups 1702*a*–1702*f*," and that "[t]he pre-charged firing cells 120 . . . include firing resistors 52 that are part of drop generators 60." Ex. 1004, 65:6–8, 65:36–38. In addition, Benjamin teaches that the drop generators in the data line groups for each fire group are disposed along the sides of their respective ink feed slots, and are fluidically coupled to their ink feed slot to receive ink. *Id.* at 65:40–68:35; Ex. 1002 ¶¶ 128, 131.

---

[8] Petitioner incorrectly states that it colors ink via 1706 cyan and ink via 1708 purple; the coloring is reversed in the annotated figure. Pet. 14–15 (annotating Ex. 1004, Fig. 21). In addition, although Petitioner refers to the color as purple, we refer to this color for ink via 1706 as magenta to remain consistent with Benjamin's teachings for Figure 21. *See* Ex. 1004, 64:66–65:2. We note that Dr. Pond at times uses the correct coloring of the ink vias, and refers to the coloring of ink via 1706 as magenta, as we do herein. *Compare* Ex. 1002 ¶ 127, *with id.* at ¶ 135.

Hence, we agree with Petitioner and find that "Benjamin's layout of printhead die 1700 disposes a heater array *adjacent* each longitudinal side of the ink feed slots 1704, 1706, and 1708 because looking at ink feed slot 1704 . . . , for example, the firing resistors from the left half of [fire group ('FG')]1 (1702a) and FG4 (1702d) . . . collectively form an array of heaters lying near or close to longitudinal side 1704a . . . of ink feed slot 1704 . . . ; and the firing resistors from the right half of FG 1 (1702a) and FG4 (1702d) . . . collectively form an array of heaters lying near or close to longitudinal side 1704b . . . of ink feed slot 1704." Pet. 15–16 (citing Ex. 1002 ¶ 132) (alterations in original).

In addition, we find persuasive Dr. Pond's testimony that Benjamin discloses "a heater array [*e.g.*, a single vertical row of firing resistors 52 from FG1/FG4, FG2/FG5, or FG3/FG6] disposed adjacent each longitudinal side of the ink vias [*e.g.*, sides 1704a and 1704b for ink feed slot 1704; sides 1706a and 1706b for ink feed slot 1706; and sides 1708a and 1708b for ink feed slot 1708] such that each ink via is associated with two heater arrays disposed adjacent the two longitudinal sides of the ink via." Ex. 1002 ¶ 132. We find that this testimony is consistent with Benjamin's teachings, which we discuss above.

After reviewing Petitioner's arguments and evidence, which are not addressed by Patent Owner, we are persuaded that Petitioner shows that Benjamin teaches "a heater array disposed adjacent each longitudinal side of the ink vias such that each ink via is associated with two heater arrays disposed adjacent the two longitudinal sides of the ink via."

4. Region Disposed Adjacent Each Heater Array

Claim 1 further recites "a region disposed adjacent each heater array, wherein only one region is disposed between two adjacent ink vias and wherein the region disposed between two adjacent ink vias includes two heater arrays each heater array being associated with their respective ink via." Ex. 1001, 8:30–34. We agree with Petitioner and find that Benjamin teaches this limitation. Pet. 17–20.

In support of its arguments, Petitioner provides a "simplified" and annotated version of Figure 21, which we reproduce below. *Id.* at 19.

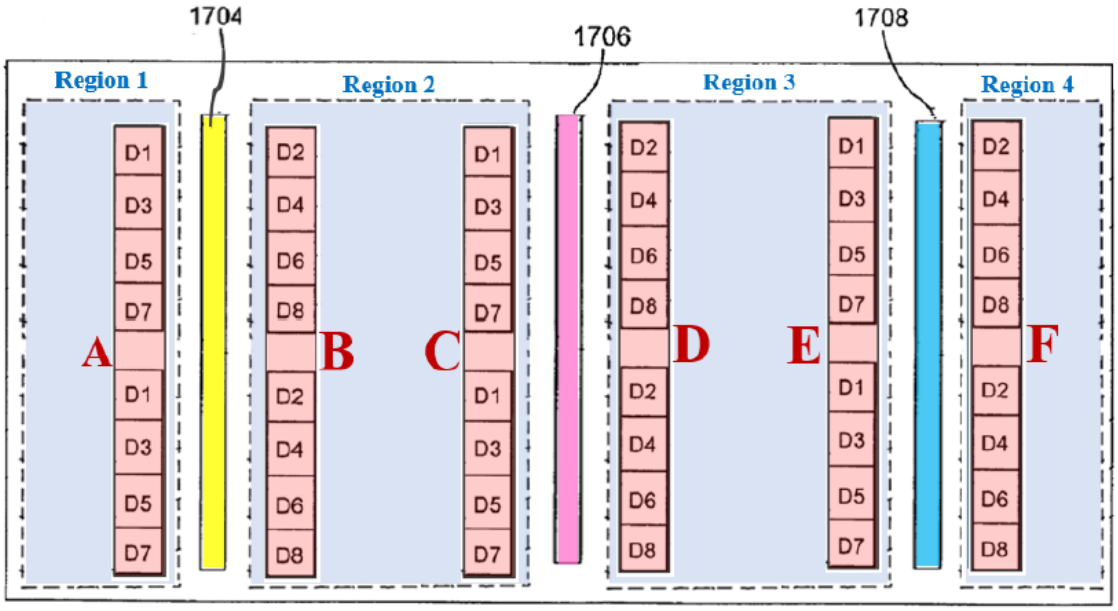

Figure 21 "is a diagram illustrating an example layout of one embodiment of a printhead die 1700." Ex. 1004, 64:53–54. Petitioner modifies the figure by, *inter alia*, (i) removing the reference numerals (other than for ink vias 1704, 1706, and 1708); and (ii) removing the six dotted boxes indicating each of the fire groups. Pet. 19. Petitioner annotates the figure by coloring ink via 1704 yellow, ink via 1706 magenta, and ink via 1708 cyan, and the data line groups (D1–D8) for each fire group red. *Id.* Petitioner also draws

a dotted-line box around the substrate portion and data line groups on the (i) left side of ink via 1704 and labels the enclosed area "Region 1," and labels the enclosed data line groups "A"; (ii) right side of ink via 1704 and the left side of ink via 1706 and labels the enclosed area "Region 2," and labels the enclosed data line groups associated with ink via 1704 "B" and associated with ink via 1706 "C"; (iii) right side of ink via 1706 and the left side of ink via 1708 and labels the enclosed area "Region 3," and labels the enclosed data line groups associated with ink via 1706 "D" and associated with ink via 1708 "E"; and (iv) right side of ink via 1708 and labels the enclosed area "Region 4," and labels the enclosed data line groups "F." *Id.* Petitioner colors Regions 1–4 light blue. *Id.*

As illustrated, Benjamin teaches a region (the portions of Regions 1–4 that do not include the heater arrays to their associated ink feed slots) disposed adjacent each heater array (the single vertical row of firing resistors of the data line groups from the fire groups associated with the ink feed slot), wherein only one region is disposed between two adjacent ink vias (Regions 2 and 3),[9] and wherein the region disposed between two adjacent ink vias (Regions 2 and 3) includes two heater arrays (data line groups B and C, or D and E). Pet. 19 (modifying and annotating Ex. 1004, Fig. 21). This is consistent with the plain and ordinary meaning of the limitation because the "wherein clauses," as Patent Owner argues, relate to "only one region," rather than "a region" and the limitation as a whole explains that these

[9] Petitioner states that "Benjamin's printhead 1700 *does not* includes one and only one region between two adjacent ink feed slots . . . ." Pet. 19 (citing Ex. 1002 ¶ 137) (emphasis added). We view the inclusion of the phrase "does not" as a typographical error, as it is inconsistent with the sentence as a whole, and the context of where it appears. *Id.*

regions are of different scope. Ex. 1001, 8:31–35; PO Resp. 32. Again, as Patent Owner puts it, "[t]he claims say that there is a region between two heater arrays and there is region between two ink vias that also includes the two heater arrays." PO Resp. 33. We find that Petitioner's showing is sufficient to show by a preponderance of the evidence that Benjamin teaches the plain and ordinary meaning of this limitation. *See supra*.

We also agree with Petitioner and find that Benjamin teaches that each of the heater arrays "is fluidically coupled" to its associated ink via (ink feed slot). Ex. 1004, 65:36–42, 66:41–43; Ex. 1002 ¶ 146. We find that Benjamin thus teaches each heater array being associated with its respective ink via.

After reviewing Petitioner's arguments and evidence, which are not addressed by Patent Owner, we are persuaded that Petitioner shows that Benjamin teaches "a region disposed adjacent each heater array, wherein only one region is disposed between two adjacent ink vias and wherein the region disposed between two adjacent ink vias includes two heater arrays each heater array being associated with their respective ink via."

5. Single Temperature Sensing Element

Claim 1 further recites "a single temperature sensing element disposed within each region, the temperature sensing element operable to sense a temperature representative of the heater arrays adjacent to the region." Ex. 1001, 8:36–39. We agree with Petitioner and find that the combination of Benjamin and Giere673 teaches this limitation. Pet. 21–27, 29–32; Pet. Reply 3–6, 9–10; Ex. 1002 ¶¶ 149–169.

In particular, we agree with Petitioner and find that Benjamin teaches using a TSR to determine a temperature of a printhead die. Ex. 1004, 79:60–

67; Fig. 25B (illustrating contacts for the TSR and a return path). We also agree with Petitioner that Benjamin does not teach where the TSR is located on the die. Pet. 21.

On the other hand, Giere673 teaches locating a TSR on a printhead assembly's substrate. *E.g.*, Ex. 1005, 4:57–60. Giere673's Figure 5 is shown below.

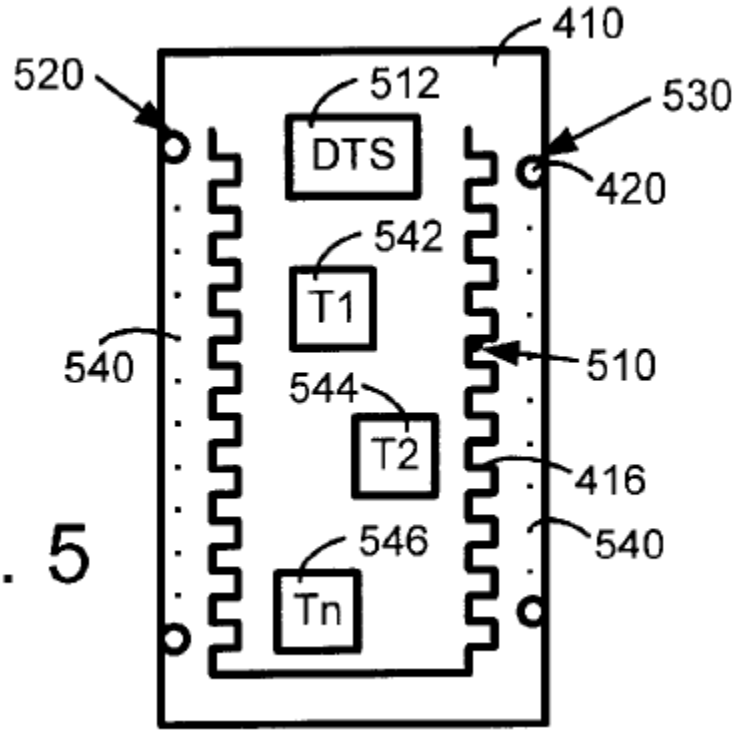

FIG. 5

Figure 5 is a schematic top view of a substrate of a printhead assembly in accordance with Giere673's teachings. *Id.* at 2:9–11. As illustrated, "TSR 510 is located along the length of the substrate 410." *Id.* at 5:10–12. More specifically, Giere673 teaches that "[t]he TSR 510 can have two legs that are approximately 680 um inboard from the center of the columns of ink ejection elements 416" (e.g., resistor heater elements). *Id.* at 4:36–39, 5:10–12; Ex. 1002 ¶ 155 (describing Giere673's teachings). In addition, Giere673 teaches that "[p]referably, [TSR 510] is not located adjacent to any

particular heating element and reflects the temperature of the substrate 410 after heat has moved from the heating elements to the TSR 510." Ex. 1005, 4:57–60. In other words, Giere673 teaches that the TSR 510 is operable to sense a temperature representative of the adjacent heater arrays. *Id.* Moreover, Giere673 teaches a controller that is coupled to temperature sensors, which "determine, at a given time, a mean or average temperature of the substrate." *Id.* at 2:57–62. This further evidences that Giere673's TSR 510 is operable to sense a temperature representative of the adjacent heater arrays. *Id.*

Also illustrated in Figure 5 are "a first column 520 of nozzles 420 (not shown to scale) and a second column 530 of nozzles 420 (the dotted lines 540 represent numerous consecutive nozzles, which are not shown for simplicity)." *Id.* at 4:63–66; *see also* Ex. 1002 ¶¶ 155–156 (describing Giere673's teachings).

We find persuasive Petitioner's arguments that one of ordinary skill in the art would have been motivated to apply Giere673's teachings to Benjamin by disposing Giere673's TSR in a region of Benjamin's printhead die (e.g., Region 2). Pet. 22; Ex. 1002 ¶ 159. As we discuss above, Benjamin teaches that a TSR is used to sense printhead die temperature. Ex. 1004, 79:60–67; Fig. 25B. And Giere673 teaches locating a single TSR on a substrate in a region (e.g., between heater arrays) to measure the substrate's mean temperature. *See* Ex. 1005, Fig. 5 (locating TSR 510 in a region between two columns of resistor heater elements); *id.* at 4:55–56 ("*One* or multiple TSRs 510 can be used to provide an approximation of the mean temperature of the substrate.") (emphasis added).

We agree with Petitioner that one of ordinary skill in the art would have been motivated to combine the teachings to optimize the print quality using the temperature value measured by the TSR located on the substrate as taught by Giere673. Pet. 31 (citing Ex. 1002 ¶¶ 181–195 (testifying to functional benefits motivating the combination)). "'[U]niversal' motivations known in a particular field to improve technology provide 'a motivation to combine prior art references *even absent any hint of suggestion* in the references themselves.'" *Intel Corp. v. PACT XPP Schweiz AG*, 61 F.4th 1373, 1380 (Fed. Cir. 2023). Optimizing print quality is such a universal motivation. Ex. 1002 ¶¶ 181–182.

We also agree with Petitioner and find that Benjamin and Giere673 address a similar problem (i.e., reduced print quality caused by the printhead operating outside its optimal temperature). Pet. 31 (citing Ex. 1002 ¶ 181). In addition, we agree that Benjamin and Giere673 optimize print quality based upon a temperature value provided by a TSR. *Id.* (citing Ex. 1002 ¶¶ 181–195). Accordingly, we find that one of ordinary skill in the art would have been motivated to make the proffered combination. *Intel*, 61 F.4th at 1379 ("*[A]ny* need or problem known in the field of endeavor at the time of invention and addressed by the patent can provide a reason for combining the elements in the manner claimed."); *KSR*, 550 at 417 ("[I]f a technique has been used to improve one device, and a person of ordinary skill in the art would recognize that it would improve similar devices in the same way, using the technique is obvious unless its actual application is beyond his or her skill.").

In addition, we find persuasive Petitioner's arguments that one of ordinary skill in the art would have been motivated to dispose a single TSR

in each of Benjamin's regions. Pet. 23–24; Ex. 1002 ¶¶ 149–169. First, Giere673 teaches that "*multiple* TSRs 510 can be used to provide an approximation of the mean temperature of the substrate." Ex. 1005, 4:55–56 (emphasis added). In addition, Giere673 teaches having a temperature controller coupled to multiple temperature sensors, which determine a mean temperature of the substrate "and an actual local temperature profile near designated ink ejection elements." *Id.* at 2:57–62. Giere673 teaches that the temperature controller selectively fires particular heating elements based on thermal conditions. *Id.* at 3:3–6. These teachings support disposing multiple TSRs across the substrate (e.g., one in each region) to measure the substrate's temperature near each of the heater arrays for selectively firing particular heating elements for print quality optimization. *Id.* at 2:57–62, 3:3–6.

Second, we agree with Petitioner and find that it was known in the prior art (i) to sense temperature on a per-color basis, where each color had an associated heater array; and (ii) that ink vias act as thermal barriers between the colors. Pet. 23 (citing Ex. 1001, 2:1–15, 2:28–29, 2:47–49). The '708 patent makes these admissions, as shown in its Figure 2 and accompanying text. Figure 2 is shown below.

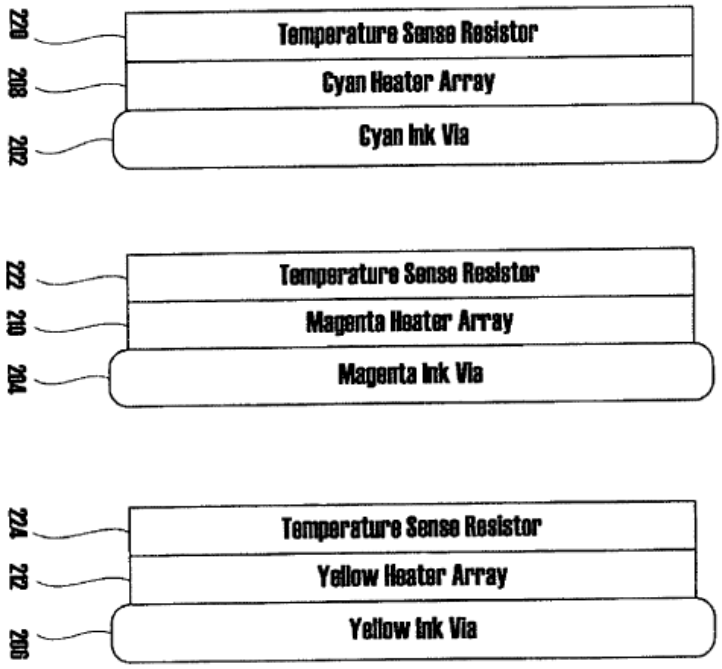

FIG. 2
[Prior Art]

Figure 2 "illustrates a traditional heater chip utilizing temperature sense resistors and heater arrays to monitor and regulate temperature on a by color basis." Ex. 1001, 4:21–23. The '708 patent's Background of the Invention section text states the following:

> The heater chip shown in F[igure] 2 improves on that of F[igure] 1 by *providing for temperature sensing on a per color basis*. Three temperature sense resistors 220, 222, and 224 are placed in close proximity to each of the heater arrays, each situated on the same side of their respective ink vias. As shown, a first TSR 220 is situated on the left side of the cyan ink via 202 and cyan heater array 208; a second TSR 222 is situated on the left side of the magenta ink via 204 and magenta heater array 210; and a third TSR 224 is situated on the left side of the yellow ink via 206 and the yellow heater array 212. *The ink vias 202, 204, and 206 act as a thermal barrier between the colors.* All the thermal heater arrays 208, 210, and 212 are situated on only one side of their respective ink vias, ensuring that there is only a small amount of thermal crosstalk between the temperature sense resistors.

Id. at 2:1–15 (emphases added). In other words, it was known to dispose a TSR adjacent to a heater array in each of the three regions separated by the ink vias. *Id.*

In addition, we agree with Petitioner and find that Yabe evidences that one of skill in the art would have known "that ink vias act as thermal insulators between other regions, limiting the TSR's effective reading to the region." Pet. 23; Ex. 1008, 3:17–22. We appropriately consider such evidence of the knowledge that one of ordinary skill in the art would have had as part of our obviousness analysis. *See Randall Mfg. v. Rea*, 733 F.3d 1355, 1362–63 (Fed. Cir. 2013).

Accordingly, in light of these admissions and Yabe's teaching, we agree with Petitioner and find that one of ordinary skill in the art would have known that placing a TSR within a single region would not accurately report the mean temperature of the entire printhead die. Ex. 1002 ¶ 160; Pet. 23. And, again, it was known to have a TSR adjacent to a heater array for each region separated by ink vias. Ex. 1001, 2:1–15. We also agree with Petitioner and find persuasive Dr. Pond's testimony that one of ordinary skill in the art thus would have been motivated to dispose a single TSR within each of Benjamin's regions (e.g., Regions 1–4) to determine temperature across the entire die to regulate the die's operational temperature and optimize the printing quality of the inkjet printing device. Ex. 1002 ¶ 161. In other words, one of ordinary skill in the art would have disposed a single TSR in each region "so that, *individually*, each TSR provides a temperature value reflective of the temperature of its region, including the heater arrays within those regions, *and collectively*, the values provided by the TSRs

reflect the mean temperature of the entire printhead die." Ex. 1002 ¶ 177; *see also id.* ¶ 187; Pet. 23–24.

We also agree with Petitioner and find that because the ink vias act as thermal insulators between the TSRs in adjacent regions, one of ordinary skill in the art "would have understood that the temperature sensed by each TSR 510 would represent the temperature of the two heater arrays in its region," for such regions. Pet. 26 (citing Ex. 1002 ¶¶ 173–174).

In addition, we agree with Petitioner and find that one of ordinary skill in the art would have had a reasonable expectation of success in combining Benjamin and Giere673's teachings. Pet. 31–32. The references teach similar printing system technologies, and we are persuaded by Dr. Pond's testimony that one of ordinary skill in the art would have found it a routine and obvious matter to combine, replace, and modify various features from Benjamin with features taught by Giere673. Ex. 1002 ¶¶ 195–197. We do not find including TSRs in each of Benjamin's regions would have been uniquely challenging or difficult for one of ordinary skill in the art. *See Leapfrog Enterprises, Inc. v. Fisher-Price, Inc.*, 485 F.3d 1157, 1162 (Fed. Cir. 2007) (citing *KSR*, 550 U.S. at 419–20) (finding that obviousness was supported because there was no evidence that making the combination was uniquely challenging or difficult for one of ordinary skill in the art).

Accordingly, we find that Petitioner has provided sufficiently articulated reasoning with rational underpinning to support combining Benjamin and Giere673 in the manner Petitioner proposes. *See In re Kahn*, 441 F.3d at 988; *see also Realtime Data, LLC v. Iancu*, 912 F.3d 1368, 1374 (Fed. Cir. 2019) ("A motivation to combine may be found 'explicitly or

implicitly in market forces; design incentives; . . . and the background knowledge, creativity, and common sense of the person of ordinary skill.'") (quoting *ZUP, LLC v. Nash Mfg., Inc.*, 896 F.3d 1365, 1371 (Fed. Cir. 2018)).

We find unavailing Patent Owner's arguments that neither Benjamin nor Giere673 is directed to detecting the temperature of distinct regions on a printhead chip using a single temperature sensor in each region, where the regions are separated by ink vias with heater arrays on both sides of the vias. PO Resp. 39–40 (citing Ex. 2003 ¶¶ 83–84); PO Sur-reply 5–6. Patent Owner argues that Benjamin teaches "only a single TSR for the entire substrate" of the printhead die. PO Resp. 38–39 (citing Ex. 1002 ¶¶ 248–252; Ex. 2003 ¶ 83); *see also id.* at 41 (arguing that Benjamin utilizes the temperature of the entire printhead die to regulate operational temperature); PO Sur-reply 7. And Patent Owner argues that Giere673 "does not relate to a printhead chip having any via at all, let alone multiple parallel vias with heater arrays on both sides of the vias." PO Resp. 39 (citing Ex. 2003 ¶ 84); *see also id.* at 40–41 (arguing that because Benjamin and Giere673 each fail to teach the claimed limitation that the combination also "necessarily fails" to teach it). Patent Owner incorrectly focuses on Benjamin and Giere673's teachings individually, rather than their combined teachings. *See In re Merck & Co.*, 800 F.2d 1091, 1097 (Fed. Cir. 1986) ("Non-obviousness cannot be established by attacking references individually where the rejection is based upon the teachings of a combination of references"). The relevant inquiry is whether the claimed subject matter would have been obvious to those of ordinary skill in the art in light of the combined teachings of Benjamin and Giere673. *See In re Keller*, 642 F.2d 413, 425

(CCPA 1981). As we discuss above, we find that this limitation would have been obvious in light of the combined teachings.

We also find unavailing Patent Owner's argument that Giere673 "relates exclusively to a system that requires inputs from" "a temperature sense resistor 510, a digital temperature sensor 512 and multiple temperature recorders 542, 544 and 546," "together with firing history data, to monitor and predict substrate thermal conditions of particular ink ejection elements and to set operating conditions so as to maintain optimal temperatures." PO Resp. 39 (citing Ex. 1005, 4:55–56, 5:28–31, 6:5–18, 6:35–40, Fig. 5; Ex. 2003 ¶ 84); PO Sur-reply 1–2. Giere673 instead teaches that its "invention should not be construed as being limited to the particular embodiments discussed." Ex. 1005, 9:42–43. Moreover, Giere673 states in the context of Figure 5's embodiment that "the temperature controller 110 of F[igure] 1 is coupled to *at least one* measurement sensor." *Id.* at 4:50–52 (emphasis added). In other words, the TSR 510 alone is sufficient. *Id.* Regardless, one of ordinary skill in the art in reading Giere673's disclosure is not "compelled to adopt every single aspect of its teaching without the exercise of independent judgment." *Lear Siegler, Inc. v. Aeroquip Corp.*, 733 F.2d 881, 889 (Fed. Cir. 1984); *In re Mouttet*, 686 F.3d 1322, 1331 (Fed. Cir. 2012) ("A reference may be read for all that it teaches, including uses beyond its primary purpose.").

We also find unavailing Patent Owner's argument that Giere673 fails to disclose a single temperature sensing element to the extent that this argument relates to Giere673 also disclosing that additional sensors and components may be employed. PO Resp. 42; PO Sur-reply 2–3. As we discuss above, Giere673 teaches that the TSR 510 alone is sufficient for

measuring temperature between the heater arrays. Ex. 1005, 4:50–52. Moreover, we find that an embodiment that also employs temperature recorders 542, 544, and 546 ("that work with the measurement sensors") teaches a single temperature sensing element. *Id.* at 5:6–17. These components work together to determine the temperature of the substrate and form a single temperature sensing element. *Id.* at 4:49–31.

We also find unavailing Patent Owner's argument that "the Benjamin device can accommodate only one temperature sense resistor because there is only a single contact area (TSR) . . . on the flex circuit shown in Figs. 25A and 25B . . . , and a single return contact area (TSR-RT)." PO Resp. 43–44 (citing Ex. 1004, Figs. 25A–B, 79:29–34, 79:63–65). This argument is akin to arguing that Benjamin and Giere673's teachings cannot be physically combined, which is an improper focus for determining whether the claim would have been rendered obvious by the prior art as a whole. *See Allied Erecting & Dismantling Co. v. Genesis Attachments, LLC*, 825 F.3d 1373, 1381 (Fed. Cir. 2016) (quoting *In re Sneed*, 710 F.2d 1544, 1550 (Fed. Cir. 1983)); *see also id.* (quoting *In re Etter*, 756 F.2d 852, 859 (Fed. Cir. 1985) (en banc)) ("Etter's assertions that Azure cannot be incorporated in Ambrosio are basically irrelevant, the criterion being not whether the references could be physically combined but whether the claimed inventions are rendered obvious by the teachings of the prior art as a whole."). Rather, we find that one of ordinary skill in the art would have "be[en] able to fit the teachings of [Benjamin and Giere673] . . . together like pieces of a puzzle" because the skilled artisan is "a person of ordinary creativity, not an automaton." *KSR*, 550 U.S. at 420–21.

We also find unavailing Patent Owner's argument that "[t]he relevant teachings of Giere[]673 are limited to its fundamentally different temperature monitoring circuitry employed on a chip with no vias, would not have been helpful to [one of ordinary skill in the art] in determining the placement of a TSR for determining the temperature of a multi-via chip as in Benjamin, and would not have suggested using only one temperature sensor to measure the temperature of each region." PO Resp. 43 (citing Ex. 2003 ¶ 85); PO Sur-reply 7. Rather, Giere673 should be read for all that it teaches to one of ordinary skill in the art. *In re Mouttet*, 686 F.3d at 1331 ("A reference may be read for all that it teaches, including uses beyond its primary purpose."); *see also KSR*, 550 U.S. at 420–21 (one of ordinary skill in the art is "a person of ordinary creativity, not an automaton").

We also find unavailing Patent Owner's argument that Benjamin already teaches an "entirely suitable way of [detecting a temperature representative of the printhead as a whole] using only a single temperature sensor on the printhead die that measures the temperature of the entire printhead." PO Resp. 43 (citing Ex. 1004, 79:60–67). First, as we discuss above, one of ordinary skill in the art would have known that placing a TSR within a single region would not accurately report the mean temperature of the entire printhead die, and thus would have been motivated to dispose a TSR in each region. Ex. 1002 ¶¶ 160–161. Regardless, the proper focus is whether the combination provides a suitable option, which Giere673's teachings do. *See Intel Corp.*, 61 F.4th at 1380 (holding the Board erred by concluding there was no reason to combine in part because the base reference "already addresses" a problem); *id.* at 1381 (finding that a

petitioner is not required to show that the combination would be an improvement, but only that it was a suitable option).

We also find unavailing Patent Owner's argument that one of ordinary skill in the art "would not have been motivated to employ separate regional TSRs for the purpose of monitoring a temperature representative of the entire printhead . . . because it would unnecessarily add cost and take up space on the printhead die and/or the flex circuit." PO Resp. 44 (citing Ex. 2003 ¶ 86). Patent Owner adds that "in designing printheads the space on the printhead chip and attached flex circuit are[] very valuable, and [one of ordinary skill in the art] would have been motivated to keep the size of both the chip and flex circuit to a minimum not only to reduce the size of the printhead and related ink cartridge, but also to reduce manufacturing cost and complexity." *Id.* However, "[t]he fact that [a] motivating benefit comes at the expense of another benefit . . . should not nullify its use as a basis to modify the disclosure of one reference with the teachings of another." *See Winner Int'l Royalty Corp. v. Wang*, 202 F.3d 1340, 1349 n.8 (Fed. Cir. 2000); *Medichem, S.A. v. Rolabo, S.L.*, 437 F.3d 1157, 1165 (Fed. Cir. 2006) ("[A] given course of action often has simultaneous advantages and disadvantages, and this does not necessarily obviate motivation to combine."). "Instead, the benefits, both lost and gained, should be weighed against one another." *Winner Int'l*, 202 F.3d at 1349 n.8. Here, Giere673 repeatedly teaches that print quality problems arise from too high temperatures, and that there is an optimal temperature operating range for a printhead. *See, e.g.*, Ex. 1005, 1:7–38. And as we discuss above, one of ordinary skill in the art would have known that placing a TSR within a single region would not accurately report the mean temperature of the entire

printhead die, and thus would have been motivated to dispose a TSR in each region. Ex. 1002 ¶¶ 160–161. On the whole, we find that the benefit of a more accurate report of the mean temperature to optimize print quality outweighs the purported cost or size concerns. Ex. 1005, 1:7–38; Ex. 1002 ¶¶ 160–161. Mr. Dietl does not quantify these concerns, or weigh them against the benefit of a more accurate temperature measurement. Ex. 2003 ¶ 86. We find that this testimony is conclusory, and lacking in specific detail. *Id.* Moreover, "the fact that [teachings] would not be combined by businessmen for economic reasons is not the same as saying that it could not be done because skilled persons in the art felt that there was some technological incompatibility that prevented their combination. Only the latter fact is telling on the issue of nonobviousness." *Orthopedic Equip. Co., Inc. v. United States*, 702 F.2d 1005, 1013 (Fed. Cir. 1983).

We also find unavailing Patent Owner's argument that "[t]he combined teachings would have suggested to [one of ordinary skill in the art] interested in monitoring overall printhead temperature to employ a single TSR on the heater chip rather than multiple TSRs each located in a different region separated by ink vias." PO Resp. 45. In particular, Patent Owner argues that "the solution consistent with the single TSR contact pad of Benjamin's flex circuit would have been to employ one continuous TSR that winds between the vias, providing a single temperature value and requiring only a single temperature input and output." *Id.* (citing Ex. 2003 ¶ 87); PO Sur-reply 8–9. First, Patent Owner incorrectly limits Petitioner's proposed combination to Benjamin's teaching of a "single TSR contact pad of Benjamin's flex circuit." PO Resp. 45. As we discuss above, this is akin to arguing incorrectly that Benjamin and Giere673's teachings cannot be

physically combined, and this argument does not account for the ordinary creativity of a skilled artisan. Second, Patent Owner's proposed solution, even if suitable, does not negate that the teachings of Benjamin and Giere673, combined in the manner Petitioner does, also provide a suitable option, for the reasons we discuss above. This suitability supports that one of ordinary skill in the art would have been motivated to combine the teachings. *See Intel Corp.*, 61 F.4th at 1381.

We also find unavailing Patent Owner's argument that Petitioner employs impermissible hindsight. PO Resp. 42, 46–47. To the contrary, as we discuss above, we find that Petitioner has provided sufficiently articulated reasoning with rational underpinning to support combining Benjamin and Giere673 in the manner Petitioner does.

We also find unavailing Patent Owner's argument that "Yabe does not disclose temperature sensors between ink vias, nor does it recognize this as a way to monitor temperature representative of the adjacent heater arrays." PO Resp. 45; PO Sur-reply 10–11. Petitioner relies on Yabe to show that one of ordinary skill in the art would have known that ink vias are insulating. Pet. 23 (citing Ex. 1008, 3:16–21). We consider Yabe for that purpose. *Randall Mfg.*, 733 F.3d at 1362–63.

In sum, we are persuaded that Petitioner shows that the combination of Benjamin and Giere673 teaches this limitation. We also find that Petitioner provides sufficiently articulated reasoning with rational underpinning to support Petitioner's combining of Benjamin and Giere673's teachings for this limitation. *See In re Kahn*, 441 F.3d at 988.

6. Disposed at a Predetermined Distance Away

Claim 1 further recites that the temperature sensing element is "disposed at a predetermined distance away from adjacent heater arrays." Ex. 1001, 8:39–40. We agree with Petitioner and find that the combination of Benjamin and Giere673 teaches this limitation. Pet. 27–29.

In particular, we find that Giere673 teaches that "[t]he TSR 510 is located along the length of the substrate 410," and that "[t]he TSR 510 can have two legs that are approximately 680 um inboard from the center of the columns of ink ejection elements 416." Ex. 1005, 5:10–12; *see also id.* at 4:36–39 (teaching that "[t]he ink ejection elements 416 may be resistor heater elements"), 4:63–66, Fig. 4 (showing resistor heater element 416 located directly below nozzle 420), Fig. 5 (showing "a first column 520 of nozzles 420 . . . and a second column 530 of nozzles 420 (the dotted lines 540 represent numerous consecutive nozzles, which are not shown for simplicity)"). In other words, Giere673 teaches that the TSR 510 is disposed at a predetermined distance (about 680 um) away from adjacent heater arrays (ink ejection elements 416). *Id.* at 4:36–39, 5:10–12.

After reviewing Petitioner's arguments and evidence, which are not addressed by Patent Owner, we are persuaded that Petitioner shows that Giere673 teaches that the temperature sensing element is "disposed at a predetermined distance away from adjacent heater arrays."

7. Summary

In sum, we determine that Petitioner shows by a preponderance of the evidence that claim 1 would have been obvious to one of ordinary skill in the art in view of the combination of Benjamin and Giere673.

D. Challenged Claims 2, 3, 5–12, 14, and 15

Patent Owner does not address separately Petitioner's arguments and evidence as to how the combination of Benjamin and Giere673 teaches the limitations of claims 2, 3, 5–12,[10] 14, and 15. *See generally* PO Resp. 38–47. And as we find above, Petitioner shows by a preponderance of the evidence that the combination of Benjamin and Giere673 teaches claim 1. *See supra* Section V.C.

Based on the evidence and arguments of record, we find that Petitioner demonstrates by a preponderance of the evidence that claims 2, 3, 5–12, 14, and 15 would have been obvious over the combination of Benjamin and Giere673. Pet. 32–42.

VI. ALLEGED OBVIOUSNESS OVER BENJAMIN, GIERE673, AND PARISH

Petitioner argues that the combination of Benjamin, Giere673, and Parish renders claims 4 and 13 obvious. Pet. 42–45. Claim 4 depends from claim 3, which depends from claim 2, which depends from independent claim 1. Ex. 1001, 8:41–47. Claim 13 depends from claim 11, which depends from independent claim 9. Ex. 1001, 9:14–16, 10:4–7. Patent Owner does not separately address Petitioner's showing directed to claims 1–4 and 9, 11, and 13 for this ground. Instead, Patent Owner relies on its arguments for claim 1 from the Benjamin and Giere673 ground. PO Resp. 47.

As we discuss above, we find unavailing Patent Owner's arguments directed to claim 1. *See supra* Section V.C. And we are persuaded by

[10] Patent Owner argues that independent claim 9 is patentable based on its same arguments for independent claim 1, rather than providing separate arguments for claim 9. *See generally* PO Resp. 38–47.

Petitioner's showings for claims 4 and 13, and for the claims from which they depend, and Petitioner's provided reasoning for combining the references. Pet. 42–45; *supra* Sections V.C–D.

Accordingly, we find that Petitioner demonstrates by a preponderance of the evidence that claims 4 and 13 would have been obvious to one of ordinary skill in the art over the combination of Benjamin, Giere673, and Parish.

VII. REMAINING GROUNDS

Petitioner argues that claims (i) 1–3, 5–12, 14, and 15 are rendered obvious by Giere178; (ii) 1–3, 5–12, 14, and 15 are rendered obvious by the combination of Giere178 and Yabe; (iii) 4 and 13 are rendered obvious by the combination of Giere178 and Parish; and (iv) 4 and 13 are rendered obvious by the combination of Giere178, Yabe, and Parish. Pet. 45–105. Thus, these grounds of unpatentability challenge claims that we already determine are unpatentable. *See supra* Sections V.C–D, VI (determining Petitioner shows the challenged claims are unpatentable). Under the circumstances of this case, analyzing additional grounds challenging the same claims, which we have determined to be unpatentable, would not be an efficient use of the Board's time and resources. *See Bos. Sci. Scimed, Inc. v. Cook Grp. Inc.*, 809 F. App'x 984, 990 (Fed. Cir. 2020) ("We agree that the Board need not address issues that are not necessary to the resolution of the proceeding."). Accordingly, we do not reach these remaining grounds. *Cf. In re Gleave*, 560 F.3d 1331, 1338 (Fed. Cir. 2009) (not reaching other grounds of unpatentability after affirming the anticipation ground); *see also Beloit Corp. v. Valmet Oy*, 742 F.2d 1421, 1423 (Fed. Cir. 1984)

(determining once a dispositive issue is decided, there is no need to decide other issues).

VIII. CONCLUSION[11]

Based on the full record, we determine that Petitioner shows by a preponderance of the evidence that claims (i) 1–3, 5–12, 14, and 15 are obvious over the combination of Benjamin and Giere673 and (ii) 4 and 13 are obvious over the combination of Benjamin, Giere673, and Parish.

Claim(s)	**35 U.S.C. §**	**Reference(s) /Basis**	**Claims Shown Unpatentable**	**Claims Not Shown Unpatentable**
1–3, 5–12, 14, 15	103(a)	Benjamin, Giere673	1–3, 5–12, 14, 15	
4, 13	103(a)	Benjamin, Giere673, Parish	4, 13	
1–3, 5–12, 14, 15	103(a)	Giere178[12]		
1–3, 5–12, 14, 15	103(a)	Giere178, Yabe[13]		

[11] Should Patent Owner wish to pursue amendment of the challenged claims in a reissue or reexamination proceeding subsequent to the issuance of this decision, we draw Patent Owner's attention to the April 2019 *Notice Regarding Options for Amendments by Patent Owner Through Reissue or Reexamination During a Pending AIA Trial Proceeding*. *See* 84 Fed. Reg. 16,654 (Apr. 22, 2019). If Patent Owner chooses to file a reissue application or a request for reexamination of the challenged patent, we remind Patent Owner of its continuing obligation to notify the Board of any such related matters in updated mandatory notices. *See* 37 C.F.R. § 42.8(a)(3), (b)(2).

[12] Because we determine that the challenged claims are unpatentable under another ground, we decline to address it for this ground.

[13] Because we determine that the challenged claims are unpatentable under another ground, we decline to address it for this ground.

4, 13	103(a)	Giere178, Parish[14]		
4, 13	103(a)	Giere178, Yabe, Parish[15]		
Overall Outcome			1–15	

IX. ORDER

In consideration of the foregoing, it is hereby

ORDERED that, pursuant to 35 U.S.C. § 314(a), Petitioner has shown by a preponderance of the evidence that claims 1–15 of the '708 patent are unpatentable; and

FURTHER ORDERED that parties to the proceeding seeking judicial review of this Final Written Decision must comply with the notice and service requirements of 37 C.F.R. § 90.2.

[14] Because we determine that the challenged claims are unpatentable under another ground, we decline to address it for this ground.
[15] Because we determine that the challenged claims are unpatentable under another ground, we decline to address it for this ground.

FOR PETITIONER:

Dion M. Bregman
Amanda S. Williamson
Jason E. Gettleman
MORGAN, LEWIS & BOCKIUS LLP
dion.bregman@morganlewis.com
amanda.williamson@morganlewis.com
jason.gettleman@morganlewis.com

FOR PATENT OWNER:

Timothy P. Maloney
Paul B. Henkelmann
Mark A. Borsos
FITCH, EVEN, TABIN & FLANNERY LLP
tim@fitcheven.com
phenkelmann@fitcheven.com
mborsos@fitcheven.com