PCT

WORLD INTELLECTUAL PROPERTY ORGANIZATION
International Bureau

INTERNATIONAL APPLICATION PUBLISHED UNDER THE PATENT COOPERATION TREATY (PCT)

(51) International Patent Classification 6 : B60Q 1/14

A1

(11) International Publication Number: **WO 98/54030**

(43) International Publication Date: 3 December 1998 (03.12.98)

(21) International Application Number: PCT/NL98/00310

(22) International Filing Date: 28 May 1998 (28.05.98)

(30) Priority Data:
1006156 29 May 1997 (29.05.97) NL

(71) Applicant *(for all designated States except US)*: RÄFSHULT [NL/NL]; Ravelstraat 3, NL–2162 AP Lisse (NL).

(72) Inventor; and
(75) Inventor/Applicant *(for US only)*: KARLSSON, Lars, Erik, Anders [NL/NL]; Ravelstraat 3, NL–2162 AP Lisse (NL).

(74) Agent: VAN KAN, J., J., H.; Algemeen Octrooibureau, World Trade Center, Past. Petersstraat 160, NL–5612 LV Eindhoven (NL).

(81) Designated States: AL, AM, AT, AU, AZ, BA, BB, BG, BR, BY, CA, CH, CN, CU, CZ, DE, DK, EE, ES, FI, GB, GE, GH, GM, GW, HU, ID, IL, IS, JP, KE, KG, KP, KR, KZ, LC, LK, LR, LS, LT, LU, LV, MD, MG, MK, MN, MW, MX, NO, NZ, PL, PT, RO, RU, SD, SE, SG, SI, SK, SL, TJ, TM, TR, TT, UA, UG, US, UZ, VN, YU, ZW, ARIPO patent (GH, GM, KE, LS, MW, SD, SZ, UG, ZW), Eurasian patent (AM, AZ, BY, KG, KZ, MD, RU, TJ, TM), European patent (AT, BE, CH, CY, DE, DK, ES, FI, FR, GB, GR, IE, IT, LU, MC, NL, PT, SE), OAPI patent (BF, BJ, CF, CG, CI, CM, GA, GN, ML, MR, NE, SN, TD, TG).

Published
With international search report.

(54) Title: A LIGHTING DEVICE HAVING A CONTROLLABLE LIGHTING PATTERN

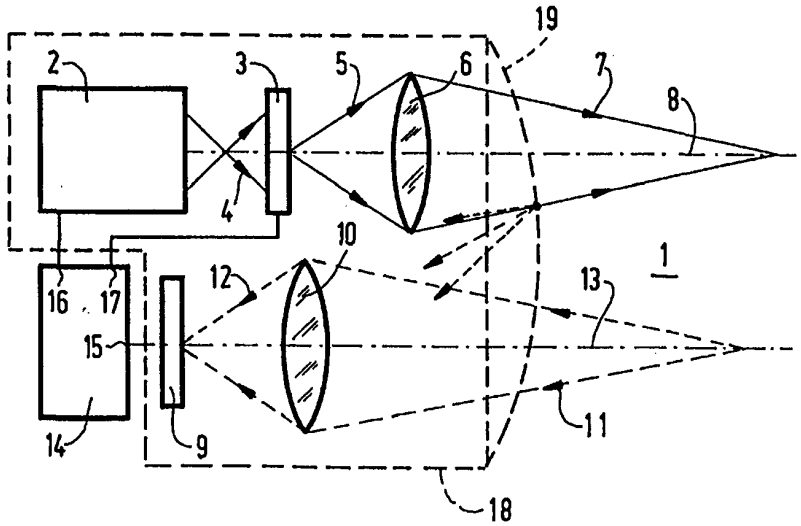

(57) Abstract

A lighting device, in particular a headlight of a motor vehicle, comprising lighting means (27) arranged for producing a light beam (7) to be emitted by the lighting device in response to a control signal delivered by light–sensitive sensor means (23) during operation. The lighting device comprises means (28) for intermittently, repeatedly controlling the intensity of the light (4) emitted by the lighting means (27) in a manner which is not visible to the human eye. Control means connect to the sensor means (23) in such a manner that the control signal delivered by the sensor means (23) during a period of low intensity of the lighting means (27) is processed so as to vary the pattern of the light beam (7). In this manner an accurate measurement of ambient light (11), which is not disturbed by the lighting device's own lighting means (27), is provided, for example for detecting light from oncoming traffic. As a result, the lighting pattern and the lighting intensity are automatically adjusted, in such a manner that oncoming traffic will not be blinded, thus permitting a light intensity which is generally higher than that of conventional dipped headlights, for example. More in particular, a lighting device which is built up of spotlight beams and spotlight sensors is provided.

FOR THE PURPOSES OF INFORMATION ONLY

Codes used to identify States party to the PCT on the front pages of pamphlets publishing international applications under the PCT.

AL	Albania	**ES**	Spain	**LS**	Lesotho	**SI**	Slovenia
AM	Armenia	**FI**	Finland	**LT**	Lithuania	**SK**	Slovakia
AT	Austria	**FR**	France	**LU**	Luxembourg	**SN**	Senegal
AU	Australia	**GA**	Gabon	**LV**	Latvia	**SZ**	Swaziland
AZ	Azerbaijan	**GB**	United Kingdom	**MC**	Monaco	**TD**	Chad
BA	Bosnia and Herzegovina	**GE**	Georgia	**MD**	Republic of Moldova	**TG**	Togo
BB	Barbados	**GH**	Ghana	**MG**	Madagascar	**TJ**	Tajikistan
BE	Belgium	**GN**	Guinea	**MK**	The former Yugoslav Republic of Macedonia	**TM**	Turkmenistan
BF	Burkina Faso	**GR**	Greece			**TR**	Turkey
BG	Bulgaria	**HU**	Hungary	**ML**	Mali	**TT**	Trinidad and Tobago
BJ	Benin	**IE**	Ireland	**MN**	Mongolia	**UA**	Ukraine
BR	Brazil	**IL**	Israel	**MR**	Mauritania	**UG**	Uganda
BY	Belarus	**IS**	Iceland	**MW**	Malawi	**US**	United States of America
CA	Canada	**IT**	Italy	**MX**	Mexico	**UZ**	Uzbekistan
CF	Central African Republic	**JP**	Japan	**NE**	Niger	**VN**	Viet Nam
CG	Congo	**KE**	Kenya	**NL**	Netherlands	**YU**	Yugoslavia
CH	Switzerland	**KG**	Kyrgyzstan	**NO**	Norway	**ZW**	Zimbabwe
CI	Côte d'Ivoire	**KP**	Democratic People's Republic of Korea	**NZ**	New Zealand		
CM	Cameroon			**PL**	Poland		
CN	China	**KR**	Republic of Korea	**PT**	Portugal		
CU	Cuba	**KZ**	Kazakstan	**RO**	Romania		
CZ	Czech Republic	**LC**	Saint Lucia	**RU**	Russian Federation		
DE	Germany	**LI**	Liechtenstein	**SD**	Sudan		
DK	Denmark	**LK**	Sri Lanka	**SE**	Sweden		
EE	Estonia	**LR**	Liberia	**SG**	Singapore		

A lighting device having a controllable lighting pattern.

The invention relates to a lighting device, in particular a headlight of a motor vehicle, comprising lighting means arranged for generating and varying the pattern of a light beam to be emitted by the lighting device in response to at least one control signal delivered by light-sensitive sensor means during operation.

A lighting device of this type is known from international patent application WO 86/05147.

Lighting devices, such as headlights of motor vehicles, have to comply with specified national and/or international regulations, in particular with regard to preventing the blinding or glare of oncoming traffic.

In accordance with said regulations, a headlight of a motor vehicle, such as a car, is not allowed to emit light exceeding a specified intensity in specified directions. During normal use of the car, when driving with dipped headlights, the risk of blinding oncoming traffic as defined in the respective regulations is practically zero. When driving with main-beams, however, oncoming traffic is easily blinded, since the main-beams are designed and optimized for long-range illumination. In many cases, in particular when driving on dark, unilluminated roads, it is highly desirable to be able to utilize the higher light intensity and the longer-range main-beam constantly, which contributes towards increased road safety and driving comfort. This raises the problem of blinding oncoming traffic which, in turn, may lead to a hazardous situation.

Blinding of traffic on the other side of the road may occur not only when driving with high beams or main-beams, but also when driving with low beams or dipped headlights, for example in the case of quick acceleration of the vehicle. In the latter case, the position of the vehicle, as well as that of the headlights, with respect to the road surface, will deviate from the normal horizontal position and, consequently, also the inclination of the light beam being emitted with respect to the road surface will be different. This phenomenon also occurs when vehicles are overloaded or when headlights are badly adjusted. When taking a bend there is also the problem that the road ahead of the vehicle is insufficiently lit, because the light beam is generally optimized for

straight movement (rather than turning movement) of the vehicle.

The prior art lighting device comprises a light-sensitive sensor, which detects the distribution and the intensity of light in the area ahead of a vehicle. The pattern of the light beam being emitted by the lighting device is automatically and dynamically adapted in dependence on the intensity and the direction of the light being detected. That is, that part of the light beam which might cause inconvenience to oncoming traffic is automatically suppressed, whilst retaining an optimum lighting effect for the driver of the vehicle himself.

It has been proposed to dispose the light sensor near the windscreen of the vehicle, for example, such that each headlight is controlled by its own sensor.

From an assembly point of view, the separate mounting of the headlights and the sensors is not to be preferred, because this requires additional assembly time, additional wiring, additional alignment operations and the like, which significantly adds to the cost of production, in particular in the case of mass production, for example in the automotive industry.

From European patent application No. 0 541 491 a lighting device is known, wherein the lighting means and a light-sensitive sensor are disposed in one housing, which facilitates assembly. In this arrangement, however, the sensor is exposed to diffuse light and to undesirable reflected light, inter alia from the lighting device´s own lighting means.

In particular when the lighting device is used in a headlight of a vehicle, the presence of dirt on the headlight causes a substantial degree of reflection of light from the device´s own lighting means and attenuation of the external light detected by the sensor, which has an adverse effect on the sensitivity of the device.

Consequently, the objective of the invention is to provide a lighting device, in particular a headlight of a motor vehicle, wherein the pattern of the emitted light beam is varied automatically in an efficient manner and with maximum sensitivity in response to at least one control signal delivered by light-sensitive sensor means during operation.

In order to accomplish that objective the lighting device according to the invention comprises control means for

intermittently, repeatedly controlling the intensity of the light emitted by the lighting means in a manner which is not visible to the human eye, wherein the control means connect to the sensor means in such a manner that the control signal delivered by the sensor means during a period of low intensity of the lighting means is processed for the purpose of varying the pattern of the light beam.

In accordance with the invention a partial dimming system is provided, wherein the possibly disturbing influence of the lighting device´s own lighting means on the sensor means is effectively reduced by decreasing the light intensity of the lighting means during the detection by the light sensor means, or, as in another embodiment of the invention, by even switching off the light altogether. By varying the light intensity in such a rhythm or for such a short time period that the variations in the light intensity are not visible to the human eye, a quasi-continuous light beam can be provided, whereby only ambient light and/or light from oncoming traffic is reliably detected.

International patent application WO 95/12502 discloses switching on and off of a headlight of a motor vehicle, however not for the purpose of accurately measuring ambient light and light of oncoming traffic preventing glare caused by the light source of the headlight itself, according to the present invention.

In conjunction with the switched headlight, WO 95/12502 discloses switching on and off an anti-dazzle mirror to allow the driver of the vehicle to see its own light pulse and not the light of other vehicles equipped with conventional headlights or with pulsed or flashing headlights.

The sensor means and the lighting means according to the present invention can be advantageously combined into a single integrated lighting device, whereby the field of view of the light-sensitive sensors and the illumination field of the light beam to be emitted, will coincide. It will be appreciated that this gives designers a high degree of freedom, which is in particular desirable when the lighting device is used as a headlight in motor vehicles of different types and dimensions, whereby it is furthermore possible to comply with relevant national and international regulations.

In case there if no other lighting system present or the vehicle the control means for controlling the lighting means are

preferably arranged in such a manner that the lighting means of the various vehicles are mutually controlled differently. This, in order to prevent situations wherein light from vehicles which are controlled precisely synchronously is not detected. To this end, the control may be selected at random or as unique or pseudo-unique pulse sequences per individual vehicle.

In particular in those cases where the headlight is dirty, it will be advantageous to vary the average light intensity of the lighting means as well. In the case of an integrated lighting device, wherein the sensor means and the lighting means are combined in the headlight, the degree of fouling of the headlight can be determined by measuring the amount of reflected light. The signal delivered by the light-sensitive sensor means when the lighting means are on, is thereby a measure for the amount of reflected light. Assuming, of course, that the sensor means are not exposed to any light or a similar amount of light from other sources.

In a preferred embodiment of the invention, the average intensity of the light emitted by the lighting means is controlled such to provide a light beam, the intensity of which is optimally adapted to the road and to the ambient light, thereby increasing the driving comfort and road safety. An advantage, in the long run, of motor vehicles equipped with lighting devices according to the invention is that the illumination by lamp posts on roads outside urban areas could be reduced, thus contributing to the conservation of energy.

In a further preferred embodiment of the lighting device according to the invention, the lighting means comprise a plurality of controllable spotlight beams as well as means for adjusting the light intensity of the spotlight beams in response to the sensor means, so as to provide a compound light beam having a desired pattern. In accordance with the invention, the light beam may be composed of a large number of spotlight beams.

The term spotlight beam used within the framework of the invention and of the present description is understood to mean a light beam comparable to the light beam emitted by a light source of limited physical dimensions, such as a light-emitting diode.

The spotlight beams can be made up of separate, spatially distributed, pixel type light sources, for example a plurality

of light-emitting diodes, or, as in another embodiment of the invention, by the spatially distributed ends of optical fibres, at the other end of which a single light source or a plurality of light sources is disposed.

According to the invention, the spotlight beams may also be advantageously made up of light modulator means, which are spatially distributed in such a manner that spotlight beams are formed from the light received by the light modulator means. The light modulator means, which may be of a type which transmits light or of a type which reflects light, are switched in such a manner during operation that the desired beam pattern is obtained.

Light modulator means which are suitable for the purpose of the invention are, for example, the so-called "Suspended Particle Devices (SPDs)". Other suitable spatial light modulators are inter alia "Liquid Crystal Devices (LCDs)", "Micro Mirrors", "Quantum Wells" and the like.

In the case of sensor means used for detecting ambient light and light from oncoming traffic as a parameter to which the pattern of the emitted light beam is to be adjusted, a preferred embodiment of the invention comprises spotlight sensors in the form of, for example, photosensitive diodes, photo transistors or other light-sensitive semiconductor components, which are spatially distributed in a predetermined manner or at random so as to be capable of detecting light from desired directions or from all directions.

Within the framework of the invention and the present description, the term spotlight sensor used herein is understood to indicate a light-sensitive sensor of limited, physically light-sensitive dimensions, which generally detects light from a specific direction.

The use of spotlight sensors makes it possible to determine precisely the direction from which light is being detected, so that subsequently a precise adjustment of the pattern of the light beam can be carried out, for example so as not to emit light in the direction of the detected light.

In another embodiment of the device according to the invention the spotlight sensors are made up of spatially distributed ends of optical fibres, at the other end of which light-sensitive sensors are disposed.

For intermittently control of the light emitted by the lighting device according to the invention, both the spotlight beams as well as the spotlight sensors can be switched. It will be understood, that this makes it possible to construct a very compact and efficient lighting device.

In a compact, robust embodiment of a lighting device according to the invention, light source means, shutter means, light modulator means, light sensor means and lens means are provided, wherein the shutter means, the light modulator means and the light sensor means are arranged on a rotatable disc, wherein a section of the disc is non-transmissive providing the shutter means and wherein the modulator means are comprised of a plurality of concentric arc shaped track-like segments, such as LCD segments, and wherein on each of the tracks at the non-transmissive section of the disc light sensor means are arranged, the rotatable disc being arranged between the light source means and the lens means, such that part of the disc is illuminated by the light source means and the light sensor means face the lens means for receiving light therefrom, and wherein the light modulator means and the light sensor means connect to control means.

For powering purposes, in a yet further embodiment of the invention, the control means are arranged at the disc and the disc comprises photo-voltaic cell means arranged at the non-transmissive section of the disc facing the light source means for generation of electrical power for the control means, modulator means and light sensor means as well as power control means arranged at the disc.

In addition to comprising light-sensitive sensors, the sensor means may also comprise one or more inclination sensors for detecting any deviation from the horizontal position upon acceleration or deceleration of the vehicle, or in those cases where the vehicle is overloaded or where the headlights are incorrectly adjusted, and/or direction sensors, for detecting whether a vehicle is taking a bend, for example a direction sensor which is responsive to the steering wheel of a vehicle.

In addition to means for automatically adjusting the pattern of the light beam being emitted, also means for manually adjusting said pattern may be provided, which means may, for example, be switched in such a manner that manual adjustment takes precedence over automatic

adjustment of the beam pattern. In this connection the usual light switches which are, for example, present in a car for switching to dipped headlights, to parking lights or to main-beam headlights may be considered.

The invention will be discussed in more detail hereafter with reference to the accompanying drawings, in which:

Figure 1 schematically shows a first embodiment of the invention, which comprises a light-sensitive sensor.

Figure 2 schematically shows a second embodiment of the invention, which comprises a light-sensitive sensor.

Figure 3 schematically shows a third embodiment of the invention, which comprises a light-sensitive sensor.

Figure 4 schematically shows a fourth embodiment of the invention, which comprises a light-sensitive sensor.

Figure 5a, b schematically show an embodiment of the invention having switching means for switching the light.

Figure 6 schematically shows part of a front view of a lighting device according to one embodiment of the invention, which comprises spotlight beams.

Figure 7 schematically shows an embodiment of the invention according to Figure 6, wherein optical fibres are used.

Figure 8 schematically shows a sixth embodiment of the invention, which comprises a light sensor which is built up of optical fibres.

Figure 9 schematically shows the arrangement of optical fibres switched as spotlight beams and as spotlight sensors.

Figure 10 schematically shows a yet further embodiment of the invention, essentially combining the embodiments of Figures 5a and 8.

Figure 11 shows a very compact, robust embodiment of the invention, wherein light switching means, light modulator means and light-sensitive sensor means as well as control and powering means are arranged on a single rotatable disc.

Figure 12 schematically shows an enlarged plan view of the disc shown in Figure 11 viewed from the lens means.

Figure 13 schematically shows a possible spatial distribution of spotlight beams and spotlight sensors in an embodiment according to the invention.

Figure 14 shows another possible spatial distribution of spotlight beams and spotlight sensors according to the invention.

Figure 15 is an electric block diagram of a lighting device according to the invention.

Figure 16 shows the use of the lighting device according to the invention in a motor vehicle, such as a car which is equipped with direction sensors and with inclination sensors.

In the description below, like parts or parts having like functions bear the same reference numerals.

Figure 1 schematically shows a first embodiment of a lighting device 1 according to the invention, which comprises lighting means in the form of a light source 2 and light modulator means 3. The light modulator means 3 are disposed opposite the light source 2, in such a manner that light 4 from the light source 2 incidences the light modulator means 3. Light 5 which is transmitted by the light modulator means 3 incidences a lens 6, which forms light 5 into a desired emitted light beam 7. The light source 2, the light modulator means 3 and the lens 6 are arranged on an optical axis 8.

The embodiment of Figure 1 comprises sensor means consisting of a light-sensitive sensor 9 and a further lens 10 disposed on the side of sensor 9 that is exposed to the incident light, such that incident light 11 on the lens 10 is formed into an incident light beam 12 on light-sensitive sensor 9. The light-sensitive sensor 9 and the further lens 10 are arranged on a common optical axis 13.

The light source 2 and the light modulator means 3 are each connected to outputs 16, 17 of control means 14, to an input 15 of which the light-sensitive sensor 9 is connected. In accordance with the invention, the control means 14 are arranged for intermittently repeatedly control of the intensity of the light emitted by the lighting means, by either controlling the light source 2 or the light modulator 3, in a manner which is not visible to the human eye. The light source 2, the light modulator means 3, the lenses 6 and 10, and the light-sensitive sensor 9 can be arranged as a single unit in a housing 18 which is, for example provided with a cover glass or glass envelope 19, as is indicated in broken lines. Also the control means 14 can be arranged therein, if desired. For the sake of clarity, the electric energy source or the power supply source for the light source 2, the light modulator means 3 and, if necessary,

the light-sensitive sensor 9 are not shown in the figure. The operation of the device is as follows.

The light modulator means 3 are controlled by the control means 14 in such a manner that the light 4 emitted by the light source 2 is processed into a light beam 7 having a desired pattern and intensity. The desired pattern and intensity of the light beam 7 are determined on the basis of the light 11 that is detected by the light-sensitive sensor 9 via the further lens 10.

According to the invention, the lighting means 2, 3 are intermittently controlled by control means 14, such that the incident light 11 on the light-sensitive sensor 9 during a period of low intensity of the lighting means is processed into an electric control signal on input 15 of the control means 14. That is, the electric signal fed to the input 15 of the control means 14 by the light-sensitive sensor 9 is processed by the control means 14 into output signals at outputs 16, 17 thereof, so as to control the lighting means 2, 3 in such a manner that a light beam 7 having a desired pattern and a desired intensity is emitted.

When the lighting device 1 is used as a headlight in a car, the pattern and the intensity of the light beam 7 are, for example, controlled in such a manner that no light at all or light having a low intensity is emitted in those directions from which light is detected by the light-sensitive sensor 9. In this manner glaring or blinding of oncoming traffic is effectively prevented, for example, whereby the lighting means 2, 3 can operate with a light intensity and with a light beam which are optimally adapted to the road and to the ambient light, which will significantly increase the driving comfort and the road safety.

The control means 14 are preferably arranged to switch the incident light 5 on the lens 6 periodically on and off or repeatedly interrupt same for a short period of time, respectively. During the dark period, that is, during the time that the light 5 is off, the light detected by the sensor 9 is measured and processed without the measurement by the sensor 9 being affected, for example, by reflected light being scattered by the cover glass 19 as indicated by dashed arrows.

This is advantageous in particular with dirty cover glasses 19, which are capable of producing a large amount of scattered reflected light, in the order of 20% of the light 5 emitted by the light source 2. In view of the short distance between the cover glass 19 and

the sensor 9 (approx. 10 cm in the case of a headlight) and the light which can be detected at distances of approx. 2 km, it applies that in fact an amount of scattered light of 0,1% is already too much to enable a reliable measurement for preventing blinding.

In order to compensate for loss of light caused by the presence of dirt on the cover glass 19, the control means 14 are preferably arranged for controlling the average light intensity of the light beam 7 as well. The degree of fouling can be determined by measuring the signal from the sensor 9 while the light source 2 is on. When the cover glass is very dirty, incident ambient light will hardly play a role, so that the measured signal will provide a reliable indication of the degree of fouling.

Those skilled in the art will appreciate that a desired reduction of the disturbing influence of the light source´s 2 own light can also be achieved by switching the light 5 to a reduced intensity. The latter may, for example, be the case when the light source 2 may not be switched off completely, and/or when the light modulator means 3 cannot block the light 4 emitted by the light source 2 completely. That is, in the embodiment shown in Figure 1, the reduction according to the invention of the intensity of the light beam 7 being emitted can be achieved by controlling the intensity of the light source 2 and/or by controlling the light modulator means 3. Consequently, in addition to being controlled to form a specified pattern of the incident light 5 on the lens 6, the light modulator means 3 can also be controlled to temporarily block the light 5 either completely or to reduce its intensity.

The embodiment of the lighting device according to Figure 1 utilizes light modulator means 3 which can be controlled to block light or to transmit light. In practice, however, light modulator means exist which can be controlled to reflect light or not to reflect light, as for example the light modulator means 21 of a lighting device 20 according to a second embodiment of the invention as shown in Figure 2.

Light 4 which is emitted by the light source 2 is formed into incident light 5 on a lens 22 via the light modulator means 21 in their reflective condition, for the purpose of producing a light beam 7 to be emitted. Depending on the light detected by the light-sensitive sensor 9, a light beam 7 having a desired pattern and a desired light intensity can be formed via the control means 14, the light source 2 and/or

the light modulator means 21.

The two embodiments described in the foregoing utilize two separated optical systems, one for producing the light beam 7 and the other for detecting ambient light for controlling the pattern and the intensity of the light beam 7. Note, lenses 6 and 10 may be combined into one integrated lens thereby.

In a preferred embodiment of the invention, as shown in Figure 3, a lighting device 24 is advantageously provided with a single optical system, both for producing the desired light beam 7 and for detecting ambient light 11. As shown, a light-sensitive sensor 23 and light modulator means 3 are arranged between the light source 2 and the lens 6. In the arrangement shown, the light-sensitive sensor 23 is constructed in such a manner that it has a negligible influence, or no influence at all, on the light 5 that incidences lens 6 from the light source 2 via the light modulator means 3. Different form what is shown, the light modulator means 3 and the sensor 23 may be interchanged or advantageously combined into a single unit.

The lighting device according to the invention advantageously enables the combined use of a single optical system both for forming the light beam 7 to be emitted and for detecting ambient light, due to the intermittently control of the lighting means 2, 3, and of the light-sensitive sensor 23, if desired, such that one or the other can be controlled to be light transmittive or light blocking, dependent on the relative position of the light modulator means 3 and the sensor 23 as well as their typical characteristics. If the light modulator means 3 are arranged to receive incident light in front of the sensor 23, the light modulator means 3 advantageously can be switched to detect light by the sensor 23 from a given direction or given directions.

In particular for lighting devices of smaller dimensions, such as the headlights of a car, the integrated embodiment according to Figure 3 has significant advantages, both from an assembly point of view and from a maintenance point of view.

Those skilled in the art will appreciate that when a light-sensitive sensor 23 is arranged between the lens 22 and the light modulator means 21 in the lighting device 20, in a similar manner as shown in Figure 3, it will also suffice to provide a single optical system.

Figure 4 schematically shows a fourth embodiment of a lighting device 25 according to the invention, which comprises a dichroic mirror 26. The operation of the dichroic mirror 26 is such that light 5 from the light modulator means 3 is transmitted, and that light 12 that incidences the dichroic mirror 26 from the lens 6 is reflected to the light-sensitive sensor 9, which is disposed opposite the dichroic mirror 26, as is shown in the figure. Also in this case the advantage of using a single optical system applies, wherein it will be apparent that in this embodiment no requirements need to be made of the light-sensitive sensor 9 as regards its influence on the light emitted by the light source 2. The light reflection and light transmission coefficients of the mirror 26 are selected such that the loss as regards light 5 is minimal and a sufficient amount of light is reflected towards the sensor 9.

In the embodiments which are shown and discussed herein, the desired pattern and the light intensity of the light beam 7 to be emitted can be provided by a light source 2, which emits a homogeneous light beam 4, which light beam is suitably changed as regards its pattern by the light modulator means 3 so as to produce a desired light beam 7 to be emitted. In the preferred embodiment of the invention, the light-sensitive sensors 9 and 23 are preferably designed to be capable of precisely determining the direction and the intensity of the detected light 11. They may for example be comprised of a matrix of photo diodes or in the case of a light-sensitive sensor 23, a photo-sensitive plate as used in modern video cameras.

For intermittently controlling the light intensity delivered by the lighting means, as discussed above, the light source or the light modulator means may be repeatedly controlled, for example in a pulsed manner, in a rythm not visible for the human eye, typically in the order of 100 Hz or higher.

In the case of a motor vehicle equipped with two switched lighting devices according to the invention, it may be desirable to synchronize the two lighting devices, i.e. headlight units, and thus performing measurements of ambient light from road signs etc. at the same time. This, to prevent reflections from road signs to be falsely detected as oncoming traffic.

If the light source itself and/or the light modulator means can not be controlled such that the light intensity can be

sufficiently reduced for the detection, by the light sentitive sensor, of the light desired for the switching of the light of the lighting means, an embodiment according to the invention can be used as schematically shown in Figure 5a.

In this embodiment, light 4 of a light source 27, for example from a parabolic reflector 31 illuminated by a lamp 30, incidences on shutter or interrupter means 28 which, as shown in Figure 5b, are comprised of a disc having a cam. The shutter means are arranged such that with rotation of the disc having the cam 32, light 4 in the direction of the light-sensitive sensor means 23 and the modulator means 3 is repeatedly interrupted for a short period of time. The time of interruption is chosen such that this interruption is not visible to the human eye.

The switched light incidences the modulator means 3 and the light 5 is shaped into a desired radiated light beam 7, as discussed above.

Those skilled in the art will appreciate that the shutter means 28 may comprise a disc having a plurality of cams 32, wherein the time of interruption of the light 4 is set by the radial dimensions of a cam 32, the rotational speed of the disc and the number of cams.

The light sensitive sensor means 3 and the modulator means 23 advantageously may be combined into a single unit, such as provided at a single printed circuit board. If desired, together with the corresponding control electronics.

In a preferred embodiment of the invention a lighting device comprising a plurality of controllable spotlight beams is used advantageously for forming random patterns of the light beam to be emitted in an effective manner. In this context the term spotlight beam is understood to mean a light beam of limited physical dimensions, for example a light beam from LED, as shown in principle in Figure 6.

Figure 6 schematically shows by way of illustration, a front view of a light beam 33 which is composed of separate, spatially distributed, that is, in the plane of the drawing, spotlight beams 34. A desired pattern and/or a desired intensity of the light beam 33 to be emitted can be simply effected by switching one or more of the spotlight beams 34 on and/or off, or by adapting the intensity of the light emitted by a spotlight beam 34.

The spotlight beams 34 can be obtained, for example, by using a light source 2 which is composed of a grid of separate light sources, such as LEDs, which can preferably be controlled either individually or in groups.

The spotlight beams 34 may also be made up of suitable modulator means, for example light modulator means which are built up of a grid of light modulators which can be switched individually, which light modulators can be controlled to transmit light, to block light and/or to reflect light, depending on the type that is used. In the simplest embodiment, it is possible to use light modulators which can be controlled in two univocal positions, for example fully light-transmitting or fully light-blocking. In a more sophisticated embodiment it may be considered to use light modulators which can be controlled to transmit light to a specified degree, so that a desired light intensity can be adjusted for each individual spotlight beam 34 or for a group of spotlight beams.

Figure 7 schematically shows an embodiment of a lighting device 35 according to the invention, which comprises lighting means 2 comprising a plurality of spatially distributed optical fibres 37. One end 38 of each optical fibre 37 is arranged for receiving light from the light source 2, and the other ends 39 of the optical fibres 37 form the plurality of spotlight beams 34, as shown in Figure 6.

In the embodiment in question the light source 2 is comprised of a plurality of separate small light sources, in such a manner that each small light source couples light into one end 38 of a fibre 37, as a result of which a spotlight beam 34 is formed at the end 39 thereof. The control means 14 are arranged to selectively switch the individual small light sources, or a group of individual small light sources, on and off, or to selectively adjust the light intensity of a respective spotlight beam 34, in response to a control signal from sensor means 23, so as to provide a desired lighting pattern. In this respect, one may speak about an "image conduit" formed by the optical fibres 37, because they transport the image (pattern) of the light to be emitted.

Instead of using a light source 2 consisting of a plurality of separate smaller light sources, it is also possible, for example, to use one common light source 27, whereby light modulator means 3 are disposed at the ends 39 of the optical fibres 37 which comprises separate spotlight modulators, each of which corresponds to one end 39

of an optical fibre 37. By suitably controlling the individual light modulators it is possible to obtain a pattern similar to that which is obtained with a light source 2 consisting of separate smaller light sources as has been described above. Analogously to Figure 3, sensor means 23 are arranged before the modulator means 3. In the illustrated embodiment the optical fibres 37 function as a kind of "light tube".

Reference numeral 36 indicates further sensor means, such as inclination sensors and direction sensors for controlling the light beams through the control means 14 dependent on the inclination of a vehicle and/or its change of direction. The sensors 36 are, of course, also applicable for use with all the other embodiments of the invention.

Figure 8 shows another embodiment of a lighting device 40 according to the invention, wherein further optical fibres 42 are spatially distributed among the optical fibres 37, which further optical fibres 42 are operatively in contact with a light-sensitive sensor 43 at their ends 38.

Detected incident light on the ends 39 of the optical fibres 42 is transmitted to the light-sensitive sensor 43, for the purpose of precisely detecting the intensity and the direction of detected light, such as light from oncoming traffic or ambient light in the case of a lighting device 40 in the form of a headlight of a motor vehicle. The ends 39 of the optical fibres 42 form so-called spotlight sensors.

Instead of using separate optical fibres 37 and 42 for forming spotlight beams and spotlight sensors, respectively, the invention provides another embodiment wherein optical fibres are alternately switched to function as spotlight beams and as spotlight sensors (not shown).

It is noted that in the embodiment of Figure 8 the optical fibres 37, connected as spotlight beams or spotlight sources, have to be arranged somewhat out of focus in the direction of the lens 6 to establish a homogeneous beam 7. The fibres 42 operating as spotlight sensor also have to be positioned somewhat out of focus in order to provide that all light sources are detected in the desired detection area. By approaching a light source to be detected, for example, more and more spotlight sensors 42 will detect or receive light. This, as illustrated in Figure 9. In this figure, it is clearly illustrated that the fibre ends 39 are out of focus with respect to the lens 6 for both the emitted light 5, 7 and the received light 11, 12.

Figure 10 shows a yet further embodiment of the invention, essentially combining the embodiments of Figures 5a and 8. Figure 10 depicts one out of, for example, eight separate light channels. Each channel having its own primary light guide 44 and secondary light guide 45, and light modulator means 3 and light sensor means 23. The light source 27, the shutter means 28 and the lens 6 are elements shared by all the channels. The primary light guide 44, for example an optical fibre, is arranged between the shutter means 28 and the modulator means 3. The primary light guide 44 merely serves the purpose of guiding light from the light source 27 towards the modulator means 3. The secondary light guide 45, which also may take the form of an optical fibre, on the one hand, transmits light from the modulator means 3 towards the lens 6 and, on the other hand, receives light from the lens 6, which is transmitted to the light sensor 23. As illustratively shown, the sensor 23 can be integrated as part of the secondary light guide 45. The modulator means 3, the sensors 23 and/or the shutter means 28 connect to control means 14 (not shown), as discussed above.

The outputs of the secondary light guides 45 of all the individual channels are brought together in the focal plane of the projection system, such as disclosed above with reference to Figure 9. As a result, different patterns can be projected by controlling the modulator means 3, which may take the form of on and off switches, for example.

Further, if the light 4 of the light source 27 is blocked by the shutter means 28, the lens 6 will appear as an imaging lens and will create an image of the scene in front of the device on the focal plane. That is, an external light source forms, through the lens 6, a spot of light at the focal plane. Since the secondary light guides 45 are located at this position, the light entering the secondary light guides 45 travels towards the sensor 23. After a certain distance in the light guide 45, the received light will be evenly distributed over a vertical cut of the light guide 45. By putting the light sensor 23 at this position, it is possible to detect an external light source. The direction of the external light source determines which sensor 23 of the channels is illuminated. The shutter means 28 can be implemented, for example, as shown in Figure 5b.

Figure 11 shows an other embodiment of the invention, wherein the shutter means, the light modulator means and the sensor means are combined onto a single rotating disk 46, driven by a motor M. A section of the disk 46 is illuminated by the light source 27 and co-incides with the focal plane of the lens or lens system 6.

Figure 12 shows, on an enlarged scale, the disc 46 viewed from the lens 6. The disk 46 comprises a non-transmissive section 47. Further, the disc 46 comprises concentric LCD arc segments 48 forming the modulator means. Light sensors 23 are mounted on the non-transmissive section 47 at the side of the disc 46 facing the lens 6. Photo-voltaic means 49 are mounted on the non-transmissive section 47 of the disc 46 at the surface thereof facing the light source 27, as schematically illustrated by dashed lines.

In operation, the disc 46 rotates which causes the non-transmissive section 47 to block the light source 27. At the same time the foto-voltaic cells 49 are illuminated by the light source 27 to charge the power circuitry of the disc (not shown) and the light sensors 23 are operative to detect external light sources. The LCD segments 48 and the light sensors 23 connect to control means 14 (not shown), as discussed above, which advantageously can be arranged at the disc 46.

The external light sources are imaged on the light sensors 23 as light spots by the lens system 6. The horizontal position of the light spots determines which LCD segment 48 should be switched off, i.e. set to a non-transmissive state. Since the LCD segments 48 form vertical bars, it is not necessary to determine the vertical position of the light sources. Each LCD segment 48 is controlled by a sensor 23 which is mounted on the same circle as the corresponding LCD arc 48. In this manner, there is a physical mapping between the sensors 23 and the LCD segment 48, i.e. each LCD segment 48 is controlled by its own sensor. However, in a further embodiment, adjacent sensors may be arranged to control an LCD segment.

The arrangement shown in Figure 11 is thus able to darken one or more LCD arc segments 48 and thus projecting vertical black bars where oncoming light is detected. By increasing the radius of the disc 46 or by reducing the size of the illuminated area of the disc 46, the arcs 48 will appear more as vertical columns. The radius of the disc 46 can be kept to 10 cm in order to fit inside a head light unit of a car,

for example.

The electrical power for controlling the LCD segments 48 and the light sensors 23 as well as further control electronics is advantageously provided by the foto-voltaic cells 49 connected to suitable power regulation electronics provided at the disc 46 (not shown). However, power can also be supplied to the electrical elements on the disc 46 using brushes and the like. However, a self-powered disc 46 is preferred.

The rotational speed of the disc 46 does not need to be controlled very accurately, approximately 30 revolutions per second (2000 rpm) seems sufficient in order to avoid disturbances to the human eye. The maximum rotation speed is primarily limited by mechanical considerations.

For cooling purposes, the disc 46 can be equipped with ventilator blades (not shown) to mitigate the terminal gradients inside a head light unit, for example. Such ventilator blades can have a dual purpose to increase air flow over the LCD segments 48 and to ensure rotation of air inside a head light unit. In order to decrease the internal temperature of the head light unit, a passive cooling system can be envisaged, making use of the air stream created when a vehicle is running.

Those skilled in the art will appreciate that the embodiment of Figure 11 is very advantageous in view of its mechanical insensitivity, i.e. the system is insensitive to mechanical or thermal disturbances since sensors, modulators and control electronics are mounted on a single disc. Relative movement between the light source 27 and the disc 46 or between the disc 46 and the lens 6 could cause light losses and redirection of the beam 7, however the functionality remains unaffected. This inherent characteristic is important from a safety point of view.

The system is further very compact, particularly the short over-all length thereof, which is more or less dictated by the focal length of the reflector 31 of the light source 27 and the lens 6. Although the system is shown with LCD segments 48, any other suitable light modulator means can be used, whether or not arranged in concentric arc form, as discussed below.

Using an existing light source such as the Philips CL35S Xenon lamp, providing over 900 lumen within a circle of 10 mm and assuming an LCD light transmissivity of 43% and system losses due to the lens 6

and the cover glass 19 of approx. 30%, a light intensity of 33 lux can be achieved over an area of 3 meter diameter on a screen 25 meters in front of the lighting device. Further, tests have been performed successfully demonstrating that an external light source can be reliable detected, even though there is a very strong internal light source which is temporarily blocked by a shutter or otherwise.

Figure 13 schematically shows the principle of spatial distribution of spotlight sensors and spotlight sources according to the invention. For the sake of simplicity the spotlight sensors and the spotlight beams or spotlight sources are shown as rectangles. Si i = 1, 2, 3 ... indicates spotlight sensors, whilst Ij j = 1, 2, 3 ... indicates spotlight beams or spotlight sources, for example the ends 39 of optical fibres 37 which are connected as spotlight sources.

It will be apparent that any arrangement of the fibre ends may be used instead of the illustrated symmetric, column-shaped arrangement, which arrangement may be optimally adapted to the requirements which are made of a lighting device.

Figure 14 shows an embodiment of a spatial distribution of spotlight sources and spotlight sensors S, shown as grey dots, according to the invention, in particular for use in a headlight of a motor vehicle, such as a car.

In addition to the arrangement of Figure 13, a number of the spotlight sources are grouped in specified levels. In this embodiment non-shaded spotlight sources indicated at D provide the dipped light function in accordance with existing vehicle headlights, whilst the single-shaded spotlight sources indicated at I provide the main-beam light function of existing vehicle headlights. The double-shaded spotlight sources indicated at D/I are both operative as dipped and main-beam lights.

The emitted light beam 50 is represented as a window which can shift in the plane of the drawings from the left to the right and from the top to the bottom, if desired, and vice versa, and which may vary as regards its shape and dimension in dependence on the desired pattern and direction of the beam.

The spotlight sources and the spotlight sensors, besides optical fibres, may also be formed by LEDs and photosensitive transistors, respectively. Arrow 41 schematically indicates an electric connection between the spotlight sensors S and spotlight sources D, I and D/I, which,

for example, may consist of transistors or the like. In an embodiment, the spotlight sensors S and the spotlight sources are mounted on a printed circuit board (PCB), together with the associated control electronics 41. Integration of LEDs and phototransistors on one carrier, for example, is also possible.

In addition to being arranged for automatically forming a lighting pattern, the lighting device according to the invention may also be arranged for manual adjustment of the pattern of the light beam to be emitted, for example in combination with the arrangement shown in Figure 14. In that case the spotlight beams can be arranged for being switched on and off manually so as to effect a desired lighting pattern.

The electric diagram shown in Figure 15 is based on processor-controlled control means 14 comprising data, address, synchronisation and signalling links, memory means 51 and manually operated switching means 52 as mentioned above.

More in particular, testing and/or calibrating means 53 are provided, which enable automatic adjustment of the lighting device according to the invention at a calibration station and storage in the memory means 51, in such a manner that a light beam is emitted which is adapted to the respective national and/or international regulations, as is schematically shown in Figure 16.

The car 56 shown in Figure 16 is furthermore provided with an inclination sensor 55 and with a direction sensor 54, which is for example connected to the steering wheel. The inclination sensor 55 delivers a signal with regard to the angle of inclination of the car with respect to the road surface 57, in such a manner that the light beam 7 to be emitted is adapted to the respective regulations at all times, also if the car 56 accelerates or decelerates with great force, or when said car is for example overloaded. The direction sensor 54 is in particular intended for determining when the car 56 is taking a bend, so that the light beam 7 can be adapted to prevent the traffic on the other side of the road from being blinded as much as possible.

In order to prevent situations where two exactly synchronously controlled lighting devices according to the invention are unable to detect each other´s light, the control means 14 preferably are arranged to use a random intermittent sequence. Preferably, for each vehicle, a unique pulse sequence is utilized, by means of which the vehicle

can also be identified. For example for paying toll, traffic fines and the like. In this connection also the use of an IR lamp, for example, for transmitting such a code at daylight or switching the lighting device on and off at intervals may be considered.

It will be appreciated that the lighting device according to the invention may be used not only in cars, but also in other motor vehicles, such as buses, trains or trams. Furthermore, the lighting device according to the invention is not limited to being used in motor vehicles, also other applications are possible, for example as a lighting device for surgical purposes or in dentistry, in order to obtain a light beam which does not blind the patient being treated, for use on stage or in TV studios, etc.

The lighting means in the lighting device according to the invention may be composed of a plurality of light sources and/or light modulators which are known per se in practice. Examples of light sources are, inter alia, filament lamps, gas discharge lamps, halogen lamps or Light Emitting Diodes (LEDs).

The light modulators may be "Liquid Crystal (LC)" light modulators, or preferably light modulators which comprise so-called "Suspended Particle Devices (SPDs)". The latter devices, also called "Light Valves", consist of a liquid suspension or of a film comprising drops of a liquid suspension. Light-absorbing, microscopic particles are dispersed in said liquid suspension. The liquid suspension or the film is confined between two glass plates, which plates are coated with a transparent conductive material. When a voltage is applied to the suspension via the coating, the particles will be forcedly aligned. This results in a higher or lower degree of transparency, whereby the intensity of the light being transmitted can be adjusted very quickly within a very large range in dependence on the voltage being applied.

The sensor means which are used may likewise be sensor means that are known per se in practice for detecting magnitudes to be scanned, such as ambient light, angle of inclination, direction of the vehicle. Light-sensitive sensors may be built up of so-called "Charge Coupled Devices (CCDs)" or "Active Pixel Sensor (APS)" or other discrete, photosensitive components, such as phototransistors.

The control means may likewise be built up of various components, such as a microprocessor, a microcontroller, programmable logic

circuits, or of discrete logic components. Preferably the control means are manufactured in the form of an "Application Specific Integrated Circuit (ASIC)". A non-volatile memory 51 type PROM, EPROM or EEPROM may be used for storing and recording the various adjustments.

Those skilled in the art will appreciate that there are several ways of realising the lighting device according to the invention, without departing from the inventive idea as defined in the appended claims.

CLAIMS

1. A lighting device, in particular a headlight of a motor vehicle, comprising lighting means arranged for generating and varying the pattern of a light beam emitted by the lighting device in response to at least one control signal delivered by light-sensitive sensor means during operation, characterised by control means for intermittently, repeatedly controlling the intensity of the light emitted by the lighting means in a manner which is not visible to the human eye, wherein the control means connect to the sensor means in such a manner that the control signal delivered by the sensor means during a period of low intensity of the lighting means is processed so as to vary the pattern of the light beam.

2. A lighting device according to claim 1, wherein said control means are arranged for controlling the average intensity of the light emitted by the lighting means.

3. A lighting device according to claim 1 or 2, wherein said control means are arranged for intermittently, repeatedly switching the light beam of the lighting means on and off, whereby the control signal delivered by the sensor means while the lighting is off is processed for the purpose of determining the pattern and/or the intensity of the light beam to be emitted.

4. A lighting device according to claim 1, 2 or 3, wherein said control means are arranged for controlling the lighting means in accordance with a random pulse sequence.

5. A lighting device according to claim 1, 2 or 3, wherein said control means are arranged for controlling the lighting means in accordance with a unique or a pseudo-unique pulse sequence.

6. A lighting device according to claim 1, 2, 3, 4 or 5, wherein said lighting means comprise a plurality of controllable spotlight beams as well as means for adjusting the light intensity of the spotlight beams in response to the sensor means, so as to provide a compound light beam having a desired pattern.

7. A lighting device according to claim 5, wherein said lighting means comprise a plurality of spatially distributed spotlight beams.

8. A lighting device according to claim 6 or 7, wherein said lighting means comprise spatially distributed, spotlight modulator means for adjusting the light intensity of the spotlight beams.

9. A lighting device according to claim 8, wherein said light modulator means are of a type which transmits light or of a type which reflects light.

10. A lighting device according to any one of the preceding claims, wherein said light-sensitive sensor means and said lighting means connected via a common optical system.

11. A lighting device according to any one of the preceding claims, wherein said light-sensitive sensor means are arranged as spotlight sensors.

12. A lighting device according to claim 11, wherein said spotlight beams and said spotlight sensors are made up of spatially distributed ends of optical fibres.

13. A lighting device according to claim 12, comprising switching means for alternately switching the ends of said optical fibres as spotlight beams and as spotlight sensors.

14. A lighting device according to any of the previous claims, comprising a plurality of primary and secondary light guide means and light sensor means, light source means, shutter means, light modulator means and lens means, wherein said shutter means are arranged opposite to said light source means, said primary light guide means are arranged between said shutter means and light modulator means, such to guide light from said shutter means to said light modulator means, and wherein said secondary light guide means are arranged between said light modulator means and said lens means, such to guide light from said modulator means to said lens means and to guide light from said lens means to said light sensor means, wherein said light modulator means and said sensor means connect to control means.

15. A lighting device according to any of the claims 1 to 13, comprising light source means, shutter means, light modulator means, light sensor means and lens means, wherein said shutter means, said light modulator means and said light sensor means are arranged on a rotatable disc, wherein a section of said disc is non-transmissive providing said shutter means and wherein said modulator means are comprised of a plurality of concentric arc shaped track-like segments, such as LCD segments, and

wherein on each of said tracks at said non-transmissive section of said disc light sensor means are arranged, said rotatable disc being arranged between said light source means and said lens means, such that part of said disc is illuminated by said light source means and said light sensor means face said lens means for receiving light therefrom, and wherein said light modulator means and light sensor means connect to control means.

16. A lighting device according to claim 15, wherein said control means are arranged at said disc and said disc comprises photovoltaic cell means arranged at said non-transmissive section of said disc facing said light source means for generation of electrical power for said control means, modulator means and light sensor means, as well as power control means arranged at said disc.

17. A lighting device according to any one of the preceding claims, wherein said sensor means comprise inclination sensors and/or direction sensors.

18. A lighting device according to any one of the preceding claims, comprising means for manually adjusting the pattern of the light beam to be emitted, and/or by means for adjusting the sensitivity of said sensor means.

19. A motor vehicle such as a car, a bus and/or a train or tram, comprising a lighting device according to any of the preceding claims.

20. A motor vehicle according to claim 19, comprising a direction sensor responsive to the position of the steering wheel of said vehicle and an inclination sensor disposed in said vehicle, said direction sensor and said inclination sensor being arranged for adjusting the pattern and/or intensity of the light beam to be emitted by said lighting device.

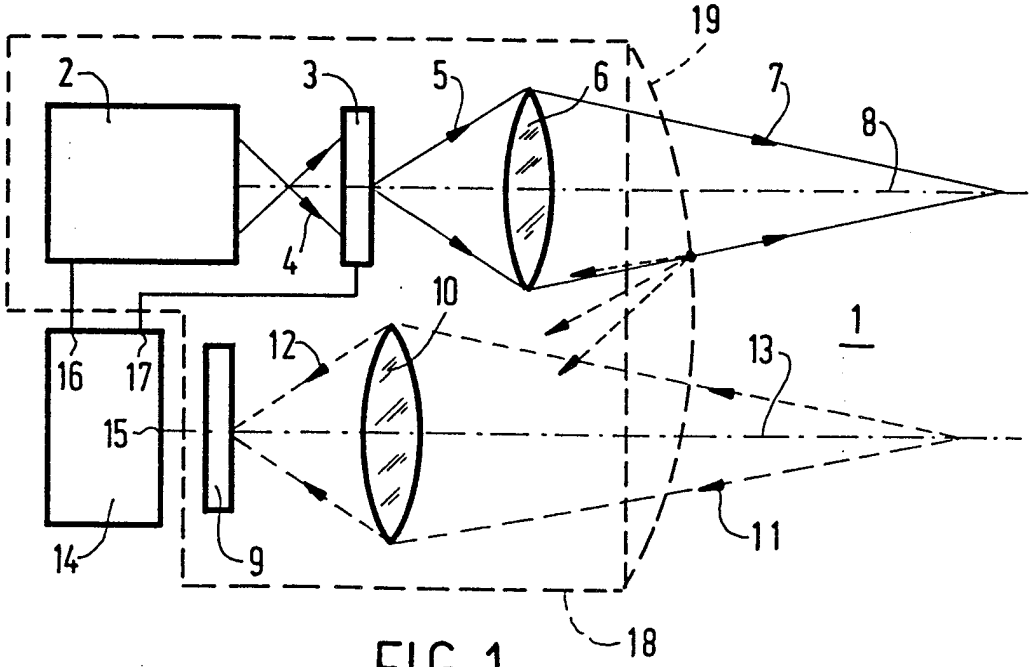
19
2
3
5
6
7
8
4
10
1
12
13
16
17
15
14
9
11
18

FIG. 1

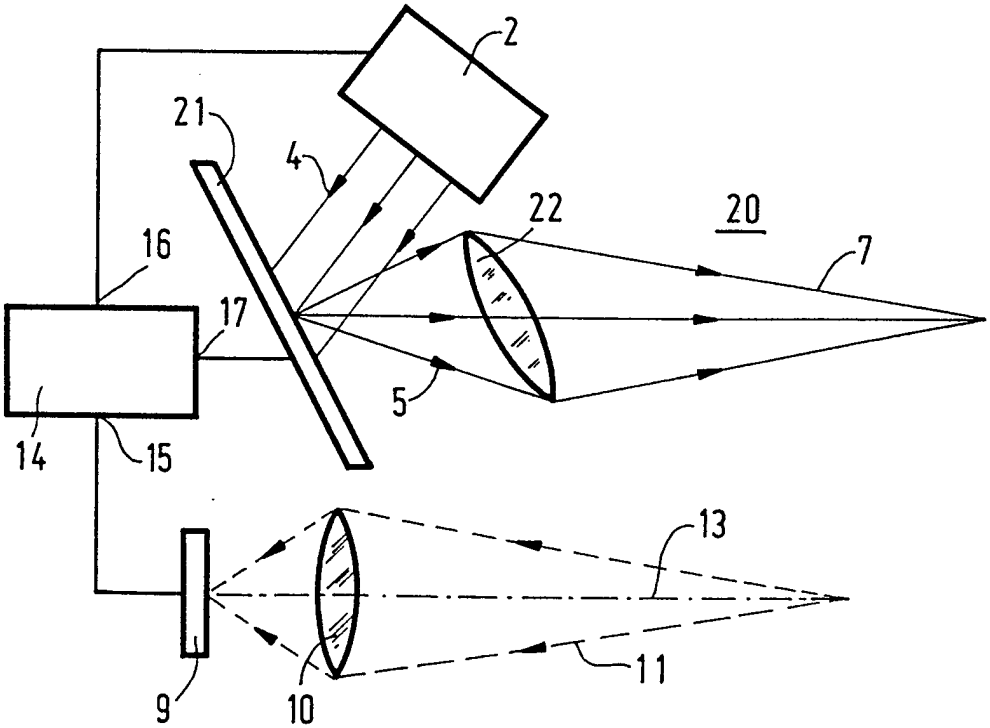
2
21
4
22
20
7
16
17
5
14
15
13
11
9
10

FIG. 2

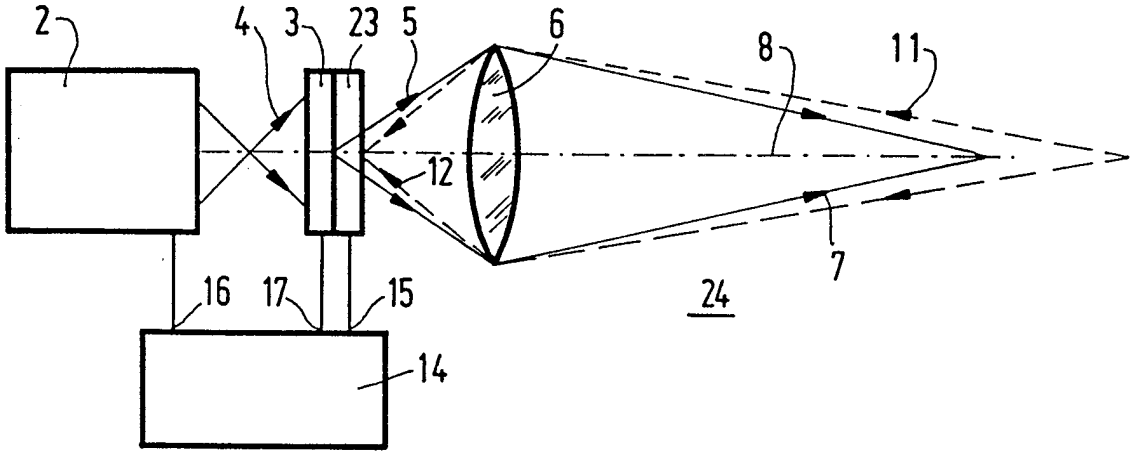

FIG. 3

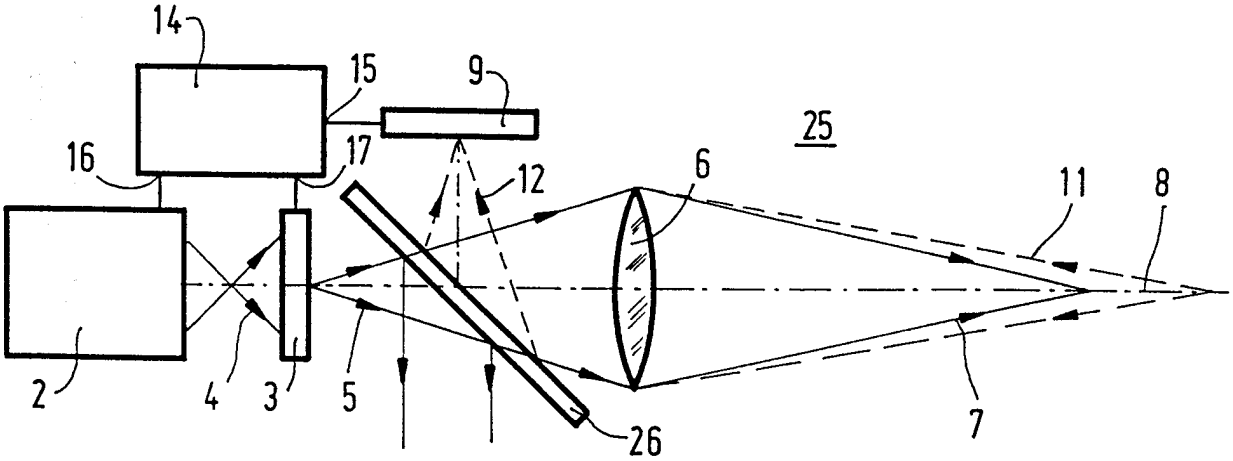

FIG. 4

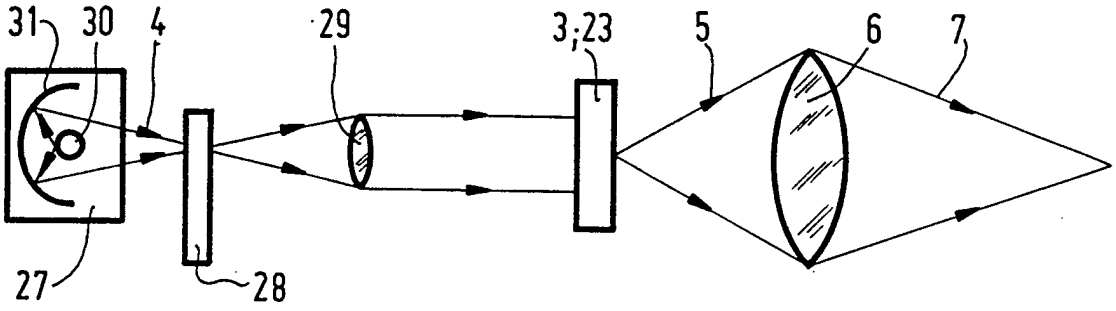

FIG. 5a

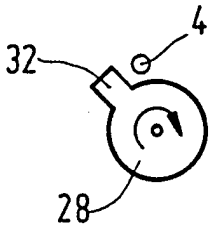

FIG. 5b

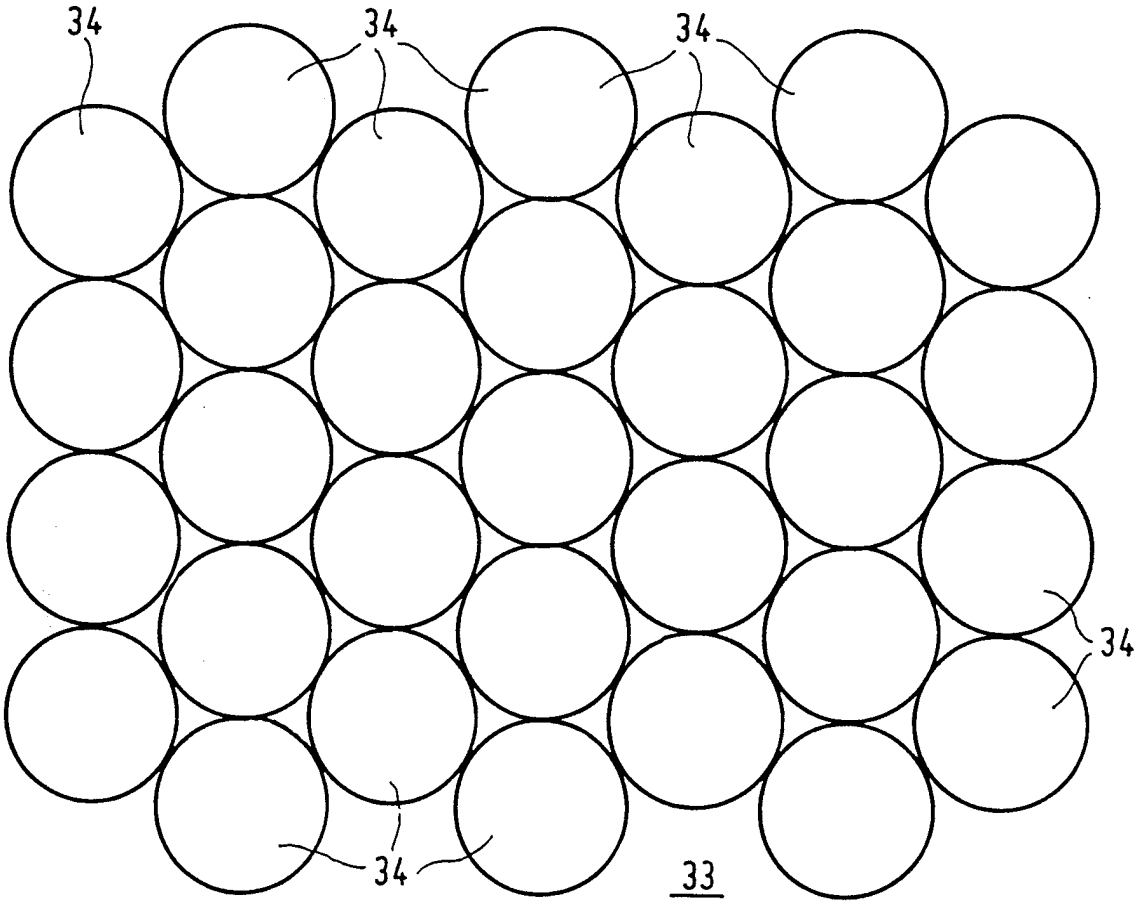

FIG. 6

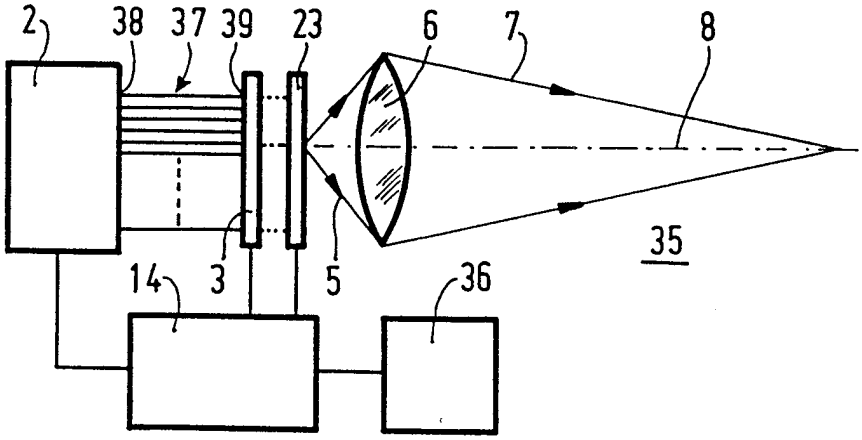

FIG. 7

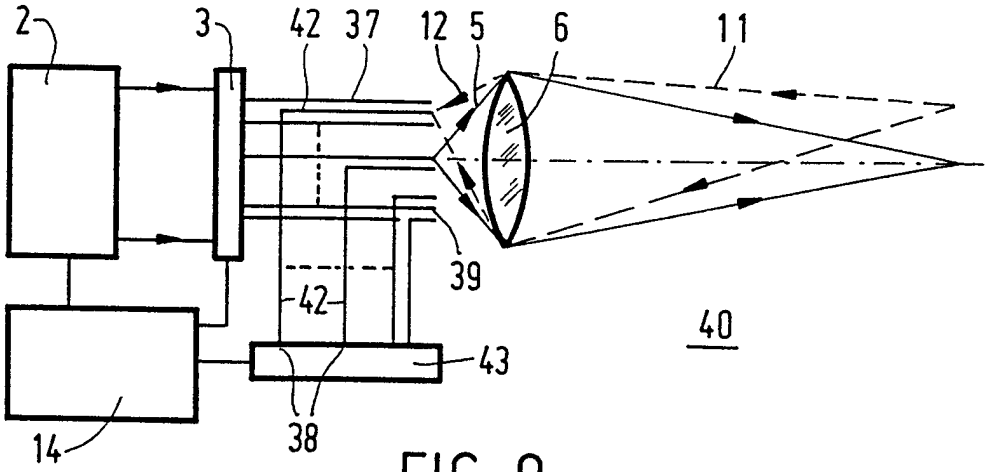

FIG. 8

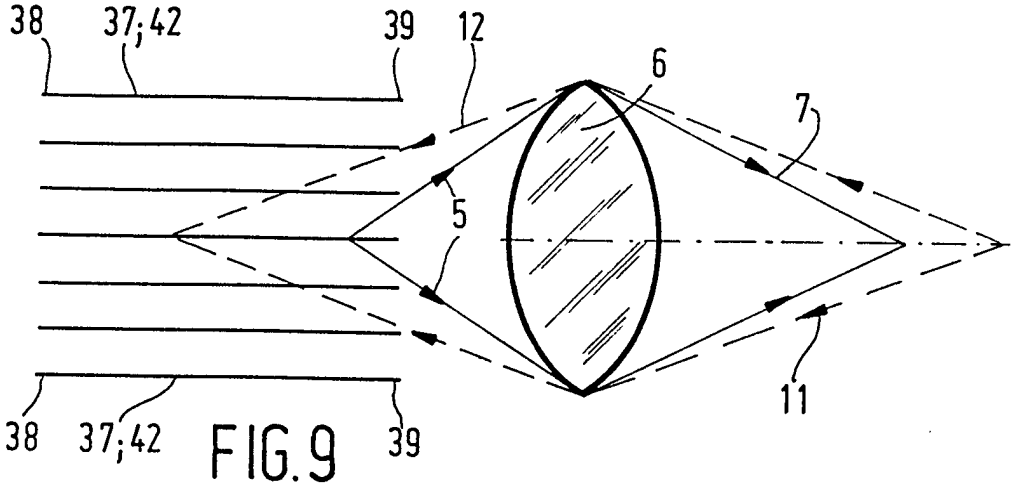

FIG. 9

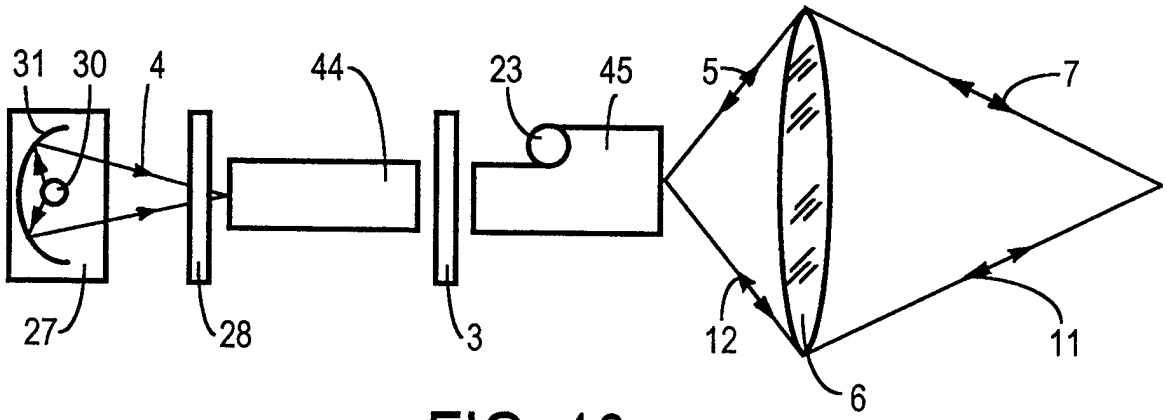

FIG. 10

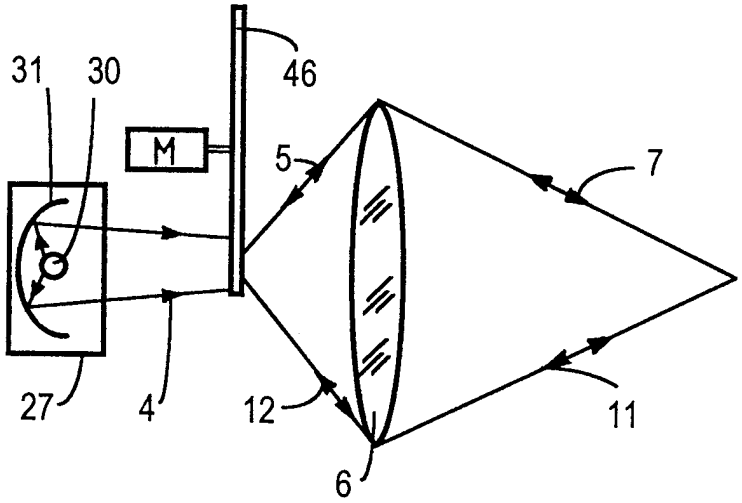

FIG. 11

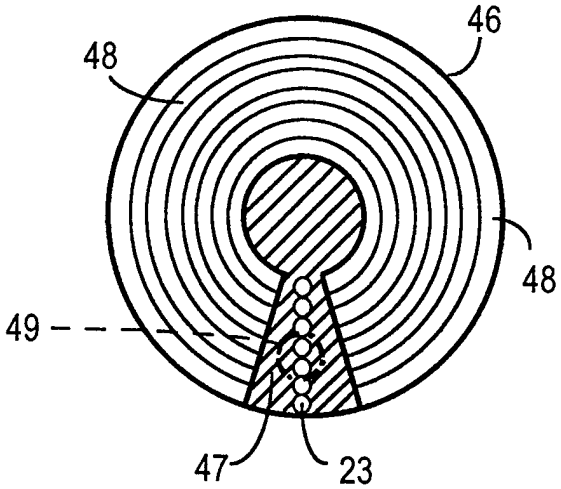

FIG. 12

S0	I0	S1	I1	S2	I2	S3	I3	S4	I4	S5	I5	S6	I6	S7	I7	S8	I8	S9
S0	I0	S1	I1	S2	I2	S3	I3	S4	I4	S5	I5	S6	I6	S7	I7	S8	I8	S9
S0	I0	S1	I1	S2	I2	S3	I3	S4	I4	S5	I5	S6	I6	S7	I7	S8	I8	S9
S0	I0	S1	I1	S2	I2	S3	I3	S4	I4	S5	I5	S6	I6	S7	I7	S8	I8	S9
S0	I0	S1	I1	S2	I2	S3	I3	S4	I4	S5	I5	S6	I6	S7	I7	S8	I8	S9
S0	I0	S1	I1	S2	I2	S3	I3	S4	I4	S5	I5	S6	I6	S7	I7	S8	I8	S9
S0	I0	S1	I1	S2	I2	S3	I3	S4	I4	S5	I5	S6	I6	S7	I7	S8	I9	S9

FIG. 13

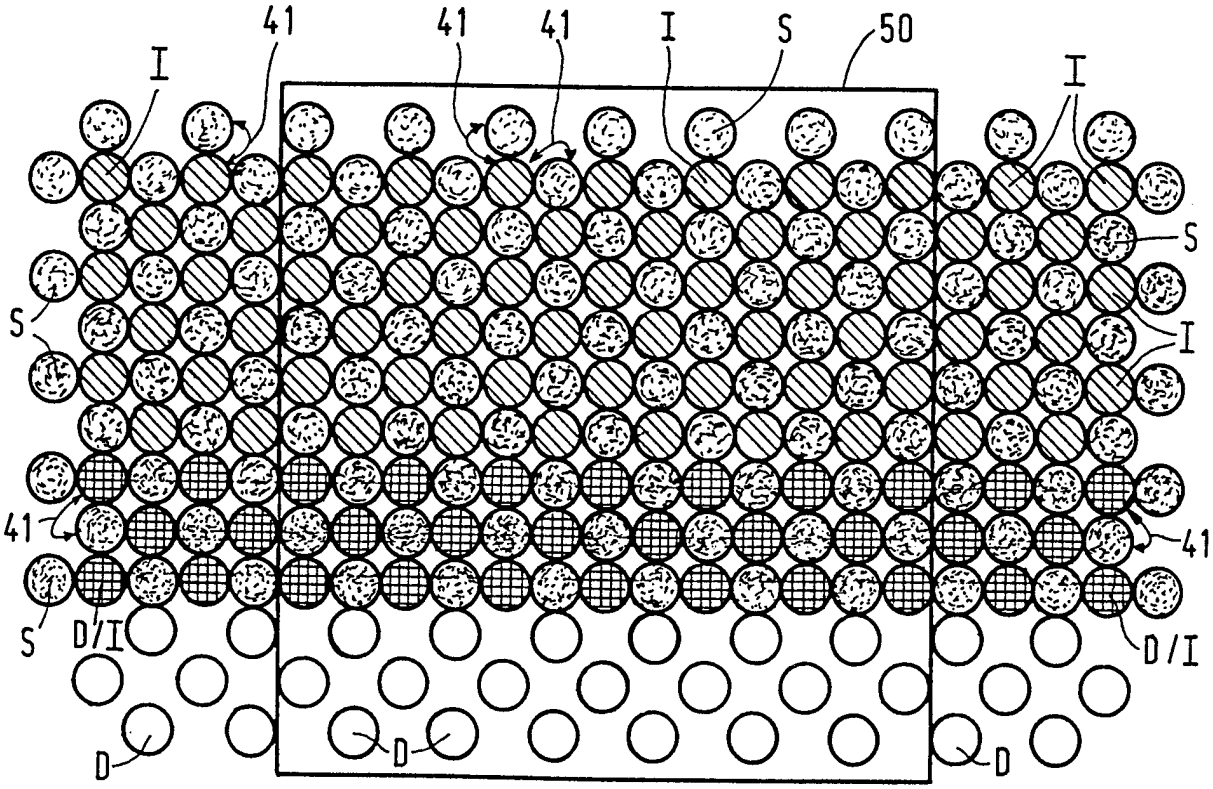

FIG. 14

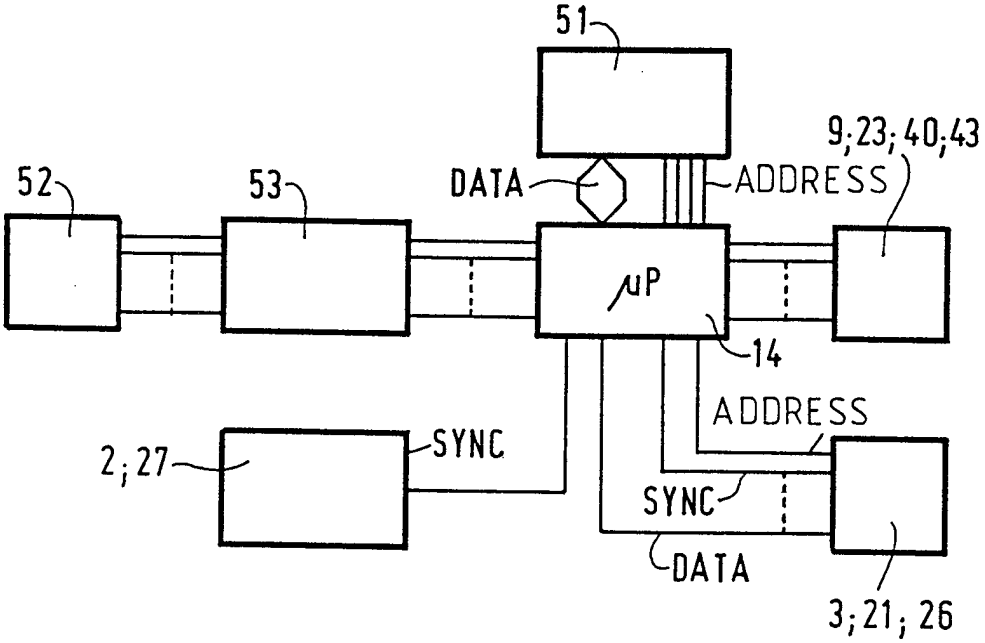
51
9;23;40;43
52
53
DATA
ADDRESS
μP
14
ADDRESS
2;27
SYNC
SYNC
DATA
3;21;26

FIG.15

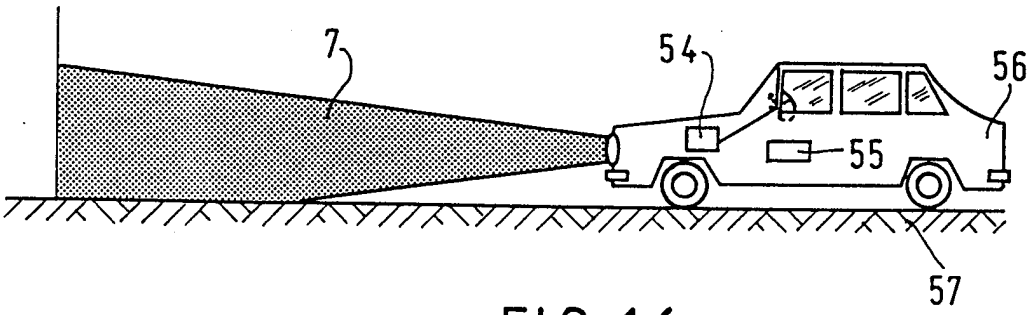
7
54
56
55
57

FIG.16

INTERNATIONAL SEARCH REPORT

In. ıtional Application No
PCT/NL 98/00310

A. CLASSIFICATION OF SUBJECT MATTER
IPC 6 B60Q1/14

According to International Patent Classification (IPC) or to both national classification and IPC

B. FIELDS SEARCHED

Minimum documentation searched (classification system followed by classification symbols)
IPC 6 B60Q

Documentation searched other than minimum documentation to the extent that such documents are included in the fields searched

Electronic data base consulted during the international search (name of data base and, where practical, search terms used)

C. DOCUMENTS CONSIDERED TO BE RELEVANT

Category °	Citation of document, with indication, where appropriate, of the relevant passages	Relevant to claim No.
Y	WO 86 05147 A (FLAATEN) 12 September 1986 cited in the application see claim 1; figures 3,4 ---	1
Y	WO 95 12502 A (CHEN) 11 May 1995 cited in the application see abstract; figure 1 ---	1
A	PATENT ABSTRACTS OF JAPAN vol. 8, no. 182 (M-319) '1619! , 22 August 1984 & JP 59 073333 A (NISSAN JIDOSHA KK), 25 April 1984 see abstract ---	1
A	EP 0 230 620 A (ROBERT BOSCH GMBH) 5 August 1987 see abstract; claims 1-11; figures 1-5 ---	1

-/--

[X] Further documents are listed in the continuation of box C.

[X] Patent family members are listed in annex.

° Special categories of cited documents :

"A" document defining the general state of the art which is not considered to be of particular relevance

"E" earlier document but published on or after the international filing date

"L" document which may throw doubts on priority claim(s) or which is cited to establish the publication date of another citation or other special reason (as specified)

"O" document referring to an oral disclosure, use, exhibition or other means

"P" document published prior to the international filing date but later than the priority date claimed

"T" later document published after the international filing date or priority date and not in conflict with the application but cited to understand the principle or theory underlying the invention

"X" document of particular relevance; the claimed invention cannot be considered novel or cannot be considered to involve an inventive step when the document is taken alone

"Y" document of particular relevance; the claimed invention cannot be considered to involve an inventive step when the document is combined with one or more other such documents, such combination being obvious to a person skilled in the art.

"&" document member of the same patent family

Date of the actual completion of the international search	Date of mailing of the international search report
11 August 1998	19/08/1998

Name and mailing address of the ISA	Authorized officer
European Patent Office, P.B. 5818 Patentlaan 2 NL - 2280 HV Rijswijk Tel. (+31-70) 340-2040, Tx. 31 651 epo nl, Fax: (+31-70) 340-3016	Onillon, C

1

Form PCT/ISA/210 (second sheet) (July 1992)

INTERNATIONAL SEARCH REPORT

In ational Application No
PCT/NL 98/00310

C.(Continuation) DOCUMENTS CONSIDERED TO BE RELEVANT

Category	Citation of document, with indication.where appropriate. of the relevant passages	Relevant to claim No.
A	US 3 316 442 A (ZUSE) 25 April 1967 see column 3, line 26 - column 5, line 74; figures 1-4 ---	1
A	FR 2 641 237 A (ROBERT BOSCH GMBH) 6 July 1990 see abstract; claims 1-3,9-13; figure 8 -----	1

1

Form PCT/ISA/210 (continuation of second sheet) (July 1992)

INTERNATIONAL SEARCH REPORT

Information on patent family members

Im tional Application No
PCT/NL 98/00310

Patent document cited in search report		Publication date	Patent family member(s)			Publication date
WO 8605147	A	12-09-1986	AU	5585986	A	24-09-1986
			EP	0213168	A	11-03-1987
WO 9512502	A	11-05-1995	CN	1092513	A	21-09-1994
			AU	6719694	A	23-05-1995
EP 230620	A	05-08-1987	DE	3601388	A	23-07-1987
			DE	3682183	A	28-11-1991
			US	4768135	A	30-08-1988
US 3316442	A	25-04-1967	NONE			
FR 2641237	A	06-07-1990	DE	3844364	A	05-07-1990