DARMSTADT
UNIVERSITY OF
TECHNOLOGY

PAL '99©

PROGRESS IN AUTOMOBILE LIGHTING

Department of Lighting Technology

September 28/29, 1999

ER FOUNTAIN AT MATHILDENHÖHE, DARMSTADT

VWGoA EX1026
U.S. Patent No. 9,955,551

Volume 5

Dept. of Lighting Technology, Darmstadt University

628.9
SCHMI
99

dedicated to

Mr. Reinhard Röpke

628.9
SCHMI
99

PAL '99©

28 / 29 September, 1999

Proceedings of the Conference

99
02051

Lichttechnik Darmstadt

Published by

Prof. Dr.-Ing. H.-J. Schmidt-Clausen
Darmstadt University of Technology

Eigentum der
AUDI AG
D-85045 Ingolstadt

Herbert Utz Verlag · Wissenschaft

München 1999

ISBN 3-89675-920-5

PAL '99: 2 Volumes, Vol. 5 & Vol. 6; not to be sold separately

Die Deutsche Bibliothek – CIP-Einheitsaufnahme
Progress in automobile lighting / Darmstadt, University of Technology, Department of Lighting Technology. Publ. by. H.-J. Schmidt-Clausen. – München : Utz, Wiss.
Vol. 5. PAL '99 : 28./29. September, 1999 ; proceedings of the conference / Lichttechnik Darmstadt. - 1999
ISBN 3-89675-920-5

Das Werk ist urheberrechtlich geschützt. Die dadurch begründeten Rechte, insbesondere die der Übersetzung, des Nachdrucks, der Entnahme von Abbildungen, der Funksendung, der Wiedergabe auf photomechanischem oder ähnlichem Wege und der Speicherung in Datenverarbeitungsanlagen bleiben, auch bei nur auszugsweiser Verwertung, vorbehalten.

Die Wiedergabe von Gebrauchsnamen, Handelsnamen, Warenbezeichnungen usw. in diesem Werk berechtigt auch ohne besondere Kennzeichnung nicht zu der Annahme, daß solche Namen in Sinne der Warenzeichen- und Markenschutz-Gesetzgebung als frei zu betrachten wären und daher von jedermann benutzt werden dürften.

Copyright © 1999 Herbert Utz Verlag GmbH

Druck: drucken + binden gmbh, München

Herbert Utz Verlag GmbH, München
Tel.: 089-277791-00
Fax: 089-277791-01
utz@utzverlag.com
www.utzverlag.com

Development of the Phase-I AFS Front Lighting System

Shoji KOBAYASHI, Toshihisa HAYAMI,

Atsushi SUGIMOTO, Hideki UCHIDA

Research & Development Center, Koito Manufacturing Co., Ltd.

ABSTRACT:

Koito Manufacturing Co., Ltd. has been actively engaged in the development of an advanced lighting system ensuring remarkably improved safety. For example, Koito commercialized the world's first steerable forward lighting system with ECU. Koito also proposed and had its advanced lighting system incorporated into the ASV (Advanced Safety Vehicle) which is being developed under the leadership of the Japanese Ministry of Transport.

In this paper, we will introduce the development concepts and composition for our advanced front lighting system and report the evaluation results of the latest prototype that we recently manufactured on a trial basis.

1. Introduction

Japan, an island nation, has over 80 million automobiles operated in a relatively small and mountainous land area. An extensive road network covers not only cities in plains but also villages in highlands. The types of roads range widely, from heavy traffic inter-city trunk roads and city streets to sparse traffic country roads. Japan is benefited by a mild climate, although precipitations are ample throughout the four seasons while fogs are frequent in many mountain regions.

These conditions give rise to a nation of dense vehicle traffic, and mainly for this reason Japan records a large number of traffic accidents. Especially, nighttime traffic fatalities are three times more than the daytime death toll, and if rainy nights are compared with rainy days the fatality ratio becomes 10 to 1. Consequently, automotive headlamps have an important role to play[1].

In view of the above traffic situation and in an effort to realize safer and more comfortable nighttime driving, Koito Manufacturing Co., Ltd. began the development of an advanced front lighting system in the mid-1980s. The concept of the development plan is summarized in Table 1[2].

Table 1: Koito's Concept of Advanced Front Lighting System Development

	Conventional headlamp system	Phase-I headlamp system	Phase-II headlamp system
Target performance	Maximum lighting performance permitted by vehicle design & photometric specification	Optimal lighting performance responding to driving operations	Optimal lighting performance responding to traffic environment; lighting performance suited for automated driving
Beam control	Manual beam switching	Automatic control synchronized with driving control	Optimal control responding to information on traffic environment through intelligent sensors
Completion target	----	1990 onward	2000 onward

Aimed at a lighting performance responding to the driver's operations, the Phase-I system is intended to achieve a front lighting which provides a clear visibility in each different driving situation. The Phase-II system, on the other hand, is targeted at achieving an optimal lighting capable of responding to the driving environment as well as steering operations; moreover, Phase-II is expected to suit the future Intelligent Transportation Systems (ITS) which will be steered with the aid of a "machine vision" system. Phase-II will be providing a nighttime lighting optimal to both human vision and machine vision.

Research and development of Phase-I was completed and commercialized by Koito for the first time in the world to supply front lighting systems capable of controlling the illumination direction in linkage with steering operations. Koito also took up the research and development of an advanced front lighting system for the Advanced Safety Vehicle (ASV) development project of the Japanese Ministry of Transport during the 1990s[3],[4]. Koito is currently engaged in the research and development of a Phase-II headlamp system.

In Europe, the EUREKA Project No.1403 AFS (Adaptive Front-lighting System) has been underway since around 1995, and efforts are being exerted to estab-

lish AFS specifications[5],[6]. Headlamps being a product distributed worldwide, it is desirable to establish a new headlamp photometric specification which is globally harmonized at the same time as adjusted to take the road conditions of various nations into account. Koito therefore was invited to take part in the EUREKA AFS Project as the Japanese representative in order to help establish an international AFS specification.

As a preparation for its participation in the AFS Project, Koito has manufactured a Demonstration Vehicle equipped with a environment-responsive Koito AFS. This AFS is based on Koito's Phase-I headlamp system technologies. The aim of this Demonstration Vehicle is to enable all people concerned in Japan and other countries to witness the effectiveness of our Phase-I in improving particularly the nighttime driving visibility under Japan's road conditions. Explained in this paper are the lighting concept, lamp/system composition, and evaluation results of Phase-I.

2. Lighting Concept of the Phase-I Headlamp System

Due to its varied road conditions, Japan can be considered to provide a world showcase of traffic problems. Consequently Koito's Phase-I should provide useful data for improved nighttime driving visibility and for developing a world AFS specification. While a conventional headlamp system consists of high and low beams, it is impossible to respond to all road conditions with just a two-beam system. More beams are necessary to match varied driving regions, traffic situations, and driving operations. Table 2-1 shows the beam configurations and corresponding driving scenes imaged by Koito, and Figure 1 illustrates major driving scenes and suitable beam distribution on the road surface.

Table 2-1: Imaged Beam Configurations and Driving Scenes

Beam configuration			Driving scene	Abbr.	
Basic beams	Motorway beam		High-speed driving on a 4-lane inter-city highway divided by anti-glare median fence	MB	
	Country beam		Driving on a suburban road with many curves but with light traffic	CB	
	Town beam		Driving on an inner-city street with many pedestrians and intersections	TB	
Additional function beams	Beam for adverse weather		Driving on a road where lane keeping is difficult due to poor visibility of the lane markings and road shoulders in adverse weather	AW	
	Bending beam	High speed	High-speed cornering on highway, etc.	BB	HC
		Middle speed	Cornering on suburban road		MC
		Low speed	Low-speed cornering on city street		LC
		Slow-down	Crossroads cornering		CC
	Beam for overhead sign		Driving toward overhead sign site	OH	
	Beam dipping or dimming		Beam dipping or dimming (intensity adjustment)	BD	

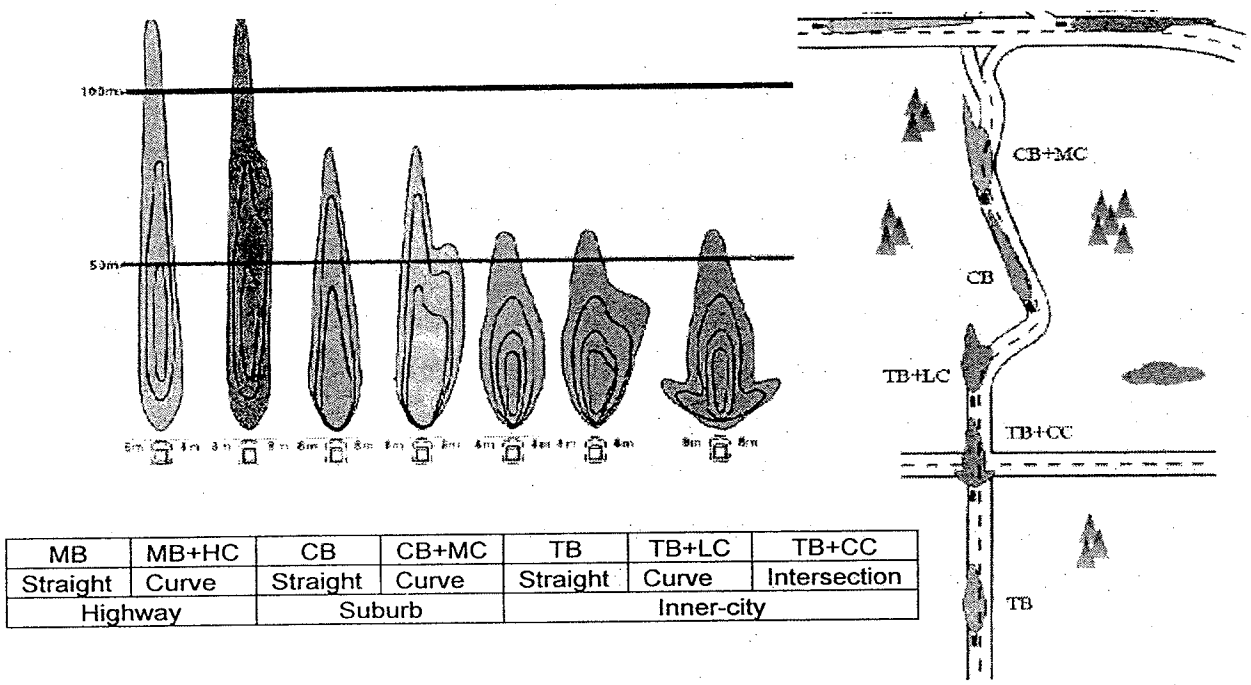

MB	MB+HC	CB	CB+MC	TB	TB+LC	TB+CC
Straight	Curve	Straight	Curve	Straight	Curve	Intersection
Highway		Suburb		Inner-city		

Fig. 1: Imaged Beam Distribution in Major Driving Scenes

The motorway beam (MB), country beam (CB), and town beam (TB) are fundamentally the same beam categories as those being discussed in Europe. Table 2-2 shows Koito's performance targets for these three basic beams.

Table 2-2: Performance Targets for Basic Beams

Basic beam	Projected driving & stopping distances	Distant surface illuminance & beam reach
MB	100km/hr, 112m	5 lx, 120m
CB	80km/hr, 76m	5 lx, 80m
TB	50km/hr, 32m	10 lx, 50m

* Stopping distance: The response time required by the driver for brake pedal operation is assumed to be one second.

Furthermore, we are considering additional function beams to supplement the three basic beams. These additions are a beam for adverse weather (AW), beam for road curves, beam for overhead signs (OH), and beam for dipping and dimming at a time of beam switching (BD).

The AW is intended to improve the visibility of road shoulders and lane markings in a rainy, foggy or another adverse weather. Its target performance is to improve the illumination of road shoulder and lane marking sections existing between 5m and 20m ahead of the vehicle.

We divide bending beams into a maximum of four categories -- a beam for high-speed cornering (HC), beam for middle-speed cornering (MC), beam for low-speed cornering (LC), and beam for crossroads cornering (CC). These bending beams may be obtained by introducing additional function lamps or by moving the aims of basic beams in the horizontal direction.

Figure 2 shows the maximum illumination directions of bending beams. Each illumination direction is set on the bending point of a lane as viewed from the lamp. The cornering speeds are assumed to be below those of MB, CB and TB (Table 2-2) which are the driving speed on straight roads. The illumination direction of CC beam for crossroads cornering is set on the basis of the vehicle's minimum turn radius.

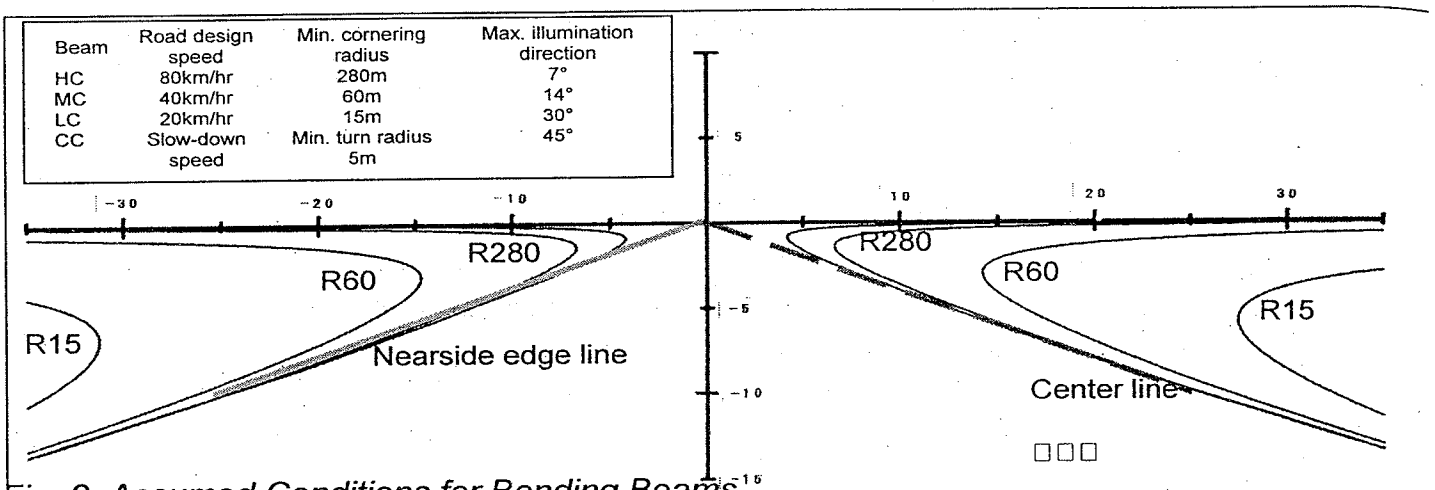

Fig. 2: Assumed Conditions for Bending Beams

In view of the traffic and road conditions in Japan, we believe it particularly necessary to improve illumination of pedestrians at city intersections, illumination in adverse weather, and illumination in the bending sections of a road.

3. Composition of Phase-I Front Lighting System

3-1. Lamp Composition

Figure 3-1 shows a front view of the Demonstration Vehicle's lighting system consisting of a main headlamp (Variable Beam or VB lamp) and three additional function lamps. These lamps are intended to satisfy all the beam functions listed in Table 2-1, except the illumination of overhead signs. These beams are controlled using information from a vehicle speed sensor and a steering sensor.

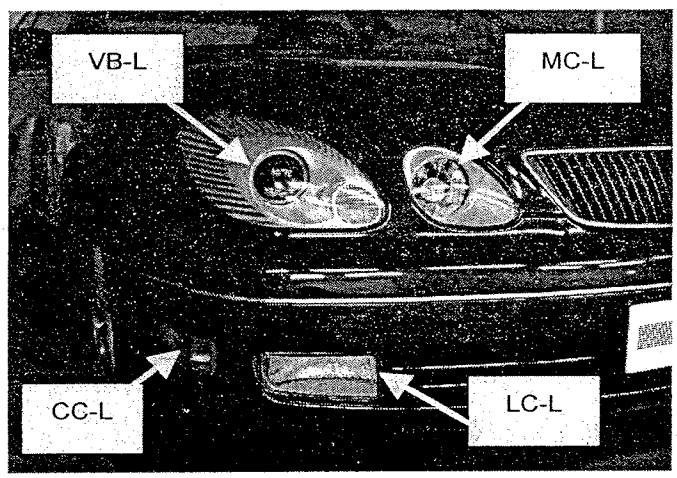

Fig. 3-1: Front View of Phase-I System

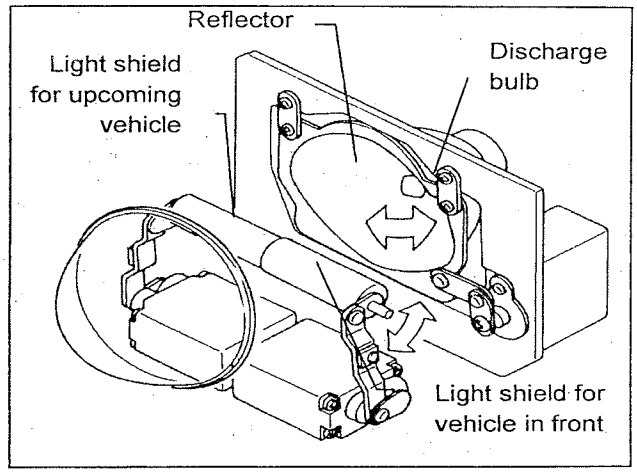

Fig. 3-2: Composition of a VB Lamp

3.1.1. Variable Beam (VB) Lamp

Figure 3-2 shows the composition of a Variable Beam (VB) lamp serving as the main headlamp. A projector-type lamp with a discharge bulb, the VB lamp incorporates two light shield each independently adjustable by 1.5° upward and 0.5° downward. One light shield is for the vehicle in front, while the other light shield is for the oncoming vehicle. The reflector is made adjustable by up to 7° in both right and left directions. For details of the VB lamp structure and photometric performance, consult the referenced document [(1)].

A VB lamp is made up of a single lamp unit designed to be response to diverse driving situations and steering operations. By combining a VB, a rotatable reflector and an adjustable light shield, the Demonstration Vehicle is capable of providing the aforementioned three types of basic beams (in both high and low beam stages) plus an HC beam for high-speed cornering.

3.1.2. Additional Function Beam Lamps

Additional function beam lamps are a group of lamps for responding to Japan's characteristic road and weather conditions, such as the presence of many road bends and intersections and many rainy and foggy days. These lamps supplement the basic beams provided by VB lamps.

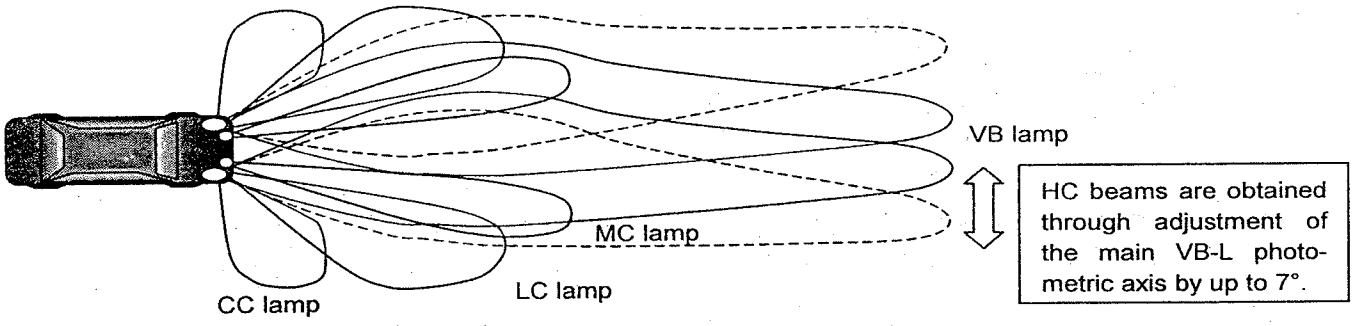

Fig. 3-3: Imaged Illumination Configurations on Road Surface

There are three types of additional function lamps: MC, LC and CC. Figure 3-3 illustrates the imaged configurations of road surface illumination by these lamps. The beam axes of the lamps are aimed at the directions indicated in Figure 2. To drive through a road bend at night, the lamps are turned on in order of the MC, LC and CC lamps.

The MC lamps illuminate especially the lane markings and road shoulder section existing between 5m and 20m ahead of the vehicle. The MC lamps therefore can function as AW lamps for illumination in adverse weather, and are made operative by a wiper switch on the condition that the VB lamps are already on.

3.2. Composition of Control System

Figure 3-4 diagrams the working of the control system employed in the Demonstration Vehicle.

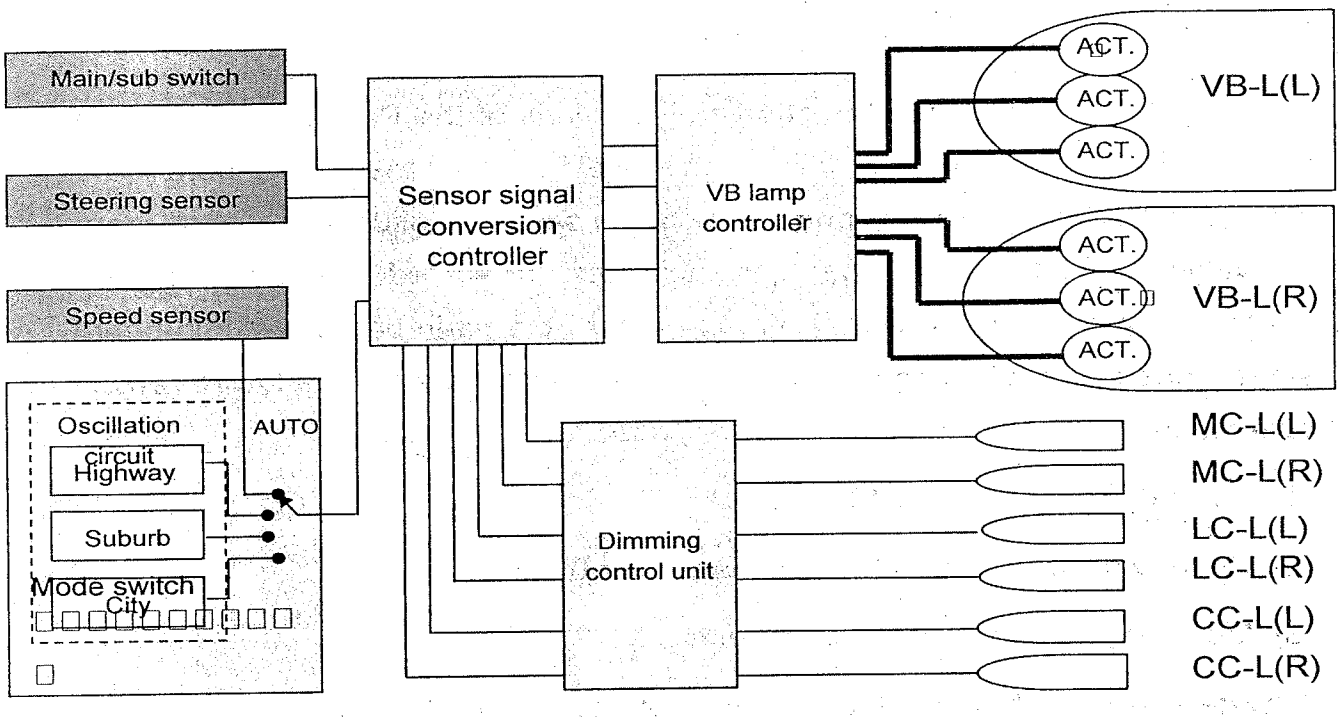

Fig. 3-4: Block Diagram of Phase-I Lamp Control System

The control system has the following components to realize the target photometric performance:

(1) Sensor signal conversion controller:

Carries out the overall control of the Phase-I front lighting system. It evaluates the current vehicle condition using input signals from the vehicle speed sensor, steering sensor, and column switch, and outputs command signals to the VB lamp controller and dimming control unit.

(2) VB lamp controller (driving of actuators):

Drives the beam axis and cutoff line control actuators incorporated in the VB lamp unit, in response to commands from the sensor signal conversion controller.

(3) Dimming control unit (for lamps other than VB lamps):

Adjusts the beams of lamps other than the VB lamps, in response to commands from the sensor signal conversion controller.

(4) Mode switch (for demonstration purposes):

Used to show selection between the motorway, country and town driving modes during vehicle halt periods for demonstration purposes.

3.4. Beam Control

Figures 3-5 and 3-6 list the beam control functions of the Phase-I front lighting system. The VB lamp has a main-beam stage for situations where there is no vehicle in front of the driver, and a sub-beam stage for situations where there are vehicles ahead of the driver. These stages are shifted manually from one another by a main/sub switch. Then, in each of the main-beam and sub-beam stages, one of the following driving modes is automatically selected from vehicle speed data:

(1) Town driving: less than 40km/h

(2) Country driving: from 40km/h to less than 90km/h

(3) Motorway driving: more than 90km/h

A hysteresis is attributed to the shift point of each driving mode so as to prevent excessive mode shifting by subtle changes in the vehicle speed. The details of beam control in each driving mode are explained below:

(1) Town driving mode

The movable beam axes of the VB lamps are fixed at 1.5° outward respectively; as a result, lateral visibility is improved in comparison with that of conventional headlamps. In addition, the bending beam lamps turn on according to the amount of steering operation.

Note that, in the case of low-speed town driving, busy steering operations occur due to frequent lane changes and crossroads turns and consequently the vehicle is often steered in directions off the driver's intended course. For this reason, the beam axis of the VB lamp is fixed, not linked with steering operations, in the town driving mode.

(2) Country driving mode

The beam axes of the VB lamps are rotated between 0 and 7° outward in linkage with steering operations. Other lamps are turned on according to the amount of steering operation as in the town driving mode. The CC beam is

inactivated in this driving mode due to a lack of steering operations similar to the crossroads turn operations in the town.

(3) Motorway (Highway) driving mode

To increase the distant visibility, the cut off line on the oncoming-vehicle side is raised 0.5° and thus is leveled with the cut off line on the front-vehicle side. Since the steering operation angle is narrowed as the vehicle speed increases, a narrower dead band was provided in the center of the steering sensor and thus the responsiveness of beam axis control is improved. Only the MC beam is activated according to the amount of steering operation, while the other additional function beams are kept inactive in the motorway driving mode.

Steering angle					
Beam ON: 0° → 40° → 100° → 180°					
Beam OFF: 0° ← 10° ← 20° ← 60°					
Lamp / Driving mode	VB-L		MC-L	LC-L	CC-L
	Main photometric axis control	Cutoff shape			
Town driving 0-40km/h	Main axis of lamps fixed 1.5° outward, respectively		O	O	O
Country driving 40-90km/h	Steering angle 0°____7°____30° Main axis position 0°.....0°____5°		O	O	X
Motorway driving 90km/h	Steering angle 0°____5°____30° Main axis position 0°.....0°____5°	0.5° UP	O	X	X

Fig. 3-5: Sub-beam Stage Beam Control in Phase-I Front Lighting System

Steering angle					
Beam ON: 0° → 40° → 100° → 180°					
Beam OFF: 0° ← 10° ← 20° ← 60°					
Lamp / Driving mode	VB-L		MC-L	LC-L	CC-L
	Main photometric axis control	Cutoff shape			
Town driving 0-40km/h	Main axis of lamps fixed 1.5° outward, respectively	1.5□UP	O	O	O
Country driving 40-90km/h	Steering angle 0°____7°____30° Main axis position 0°.....0°____5°	1.5□UP	O	O	X
Motorway driving 90km/h	Steering angle 0°____5°____30° Main axis position 0°.....0°____5°	1.5□UP	O	X	X

Fig. 3-6: Main-beam Stage Beam Control in Phase-I Front Lighting System

4. Evaluation of the Phase-I Front Lighting System

The evaluation of the Koito Phase-I front lighting system was conducted on a test course situated on the foot of Mount Fuji, as shown in Figure 4. This two-lane test course, 4 km long, contains bends, uphill and downhill slopes, T-shaped crossroads, intersections, and a 800-meter long straight road section. Evaluation items and results are summarized in Table 4. A 10-point visibility evaluation scale was employed as follows:

0 : Unacceptable

2 : Difficult to drive

4 : Not easy to drive

6 : Average driving ease

8 : Satisfactory driving ease

10 : Very comfortable driving

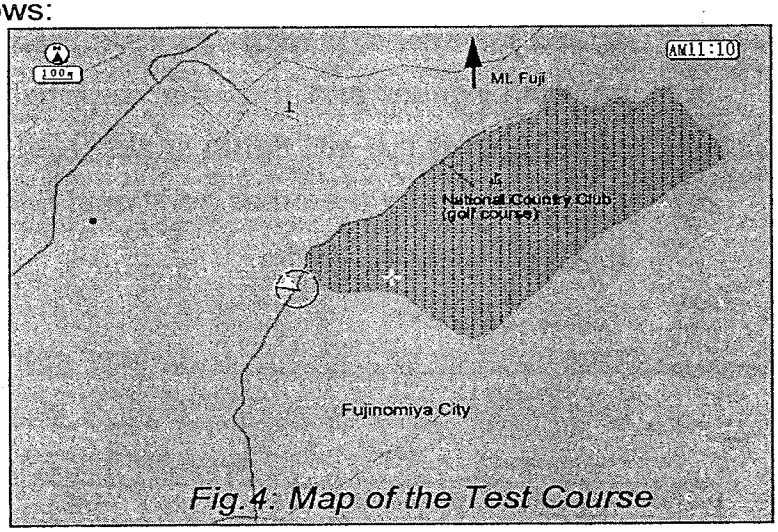

Fig.4: Map of the Test Course

Table 4: Evaluation of Phase-I Front Lighting System (8 Subjects)

	Evaluation item	Conventional head-lamps (halogen bulbs)	Phase-I system
Sub-beam stage	Driving ease at intersection & "T" crossroads	4.1	7.9
	Ease of cornering	5.4	8.2
	Ease of high-speed driving on straight road	6.1	7.6
	Ease of driving on up-and-down slopes	5.3	6.3
Main-beam stage	Ease of high-speed driving on straight road	6.1	6.5
	Ease of cornering	5.8	8.5

The evaluation by eight subjects indicated a substantial improvement in night-time driving ease by Phase-I as compared to conventional headlamp systems. A particularly remarkable improvement was reported in the visibility of various obstacles on intersections, T-shaped crossroads, bends and slopes. Further, the visibility of the lane shape from a distance and in a sharp cornering situation was found to have greatly improved. As the only exception, visibility during high-speed driving in the main-beam stage improved minimally because, in all prob-

ability, the main-beam cut off position was set 1.5° above the sub-beam cutoff position.

5. Remaining Problems and Countermeasures in Phase-I Front Lighting System

In the Phase-I front lighting system which is intended for demonstration driving in Japan and abroad, the driving modes are switched according to data from vehicle speed and steering sensors. Weather information is obtained from wiper operations (time and position). Consequently, Phase-I still has the following problems:

(1) It is not possible to obtain full information on driving regions from vehicle speed and steering sensors.

(2) Phase-I's sensors for collecting information on weather and road surface conditions are not adequate.

To obtain more accurate information on driving regions, it is advantageous to use data from a GPS navigation system. Figure 5 shows a typical map available from a navigation system display in Japan. An arrow inside a circle indicates the current position of the vehicle. The numerous dots indicate nodes. Data on the positions of the vehicle and nodes are available from the navigation system in terms of latitude and longitude. In addition, a map data base can supply detailed road information for each node, as shown in Table 5:

Table 5: Summary of Road Information at Node Position

Data item	Content
Node position	Indicated in latitude and longitude
No. of links	No. of roads linked with node
Road configuration	* Road type: highway, national road, etc. * Tunnel, median strip, etc. * No. of lanes, road width, etc.

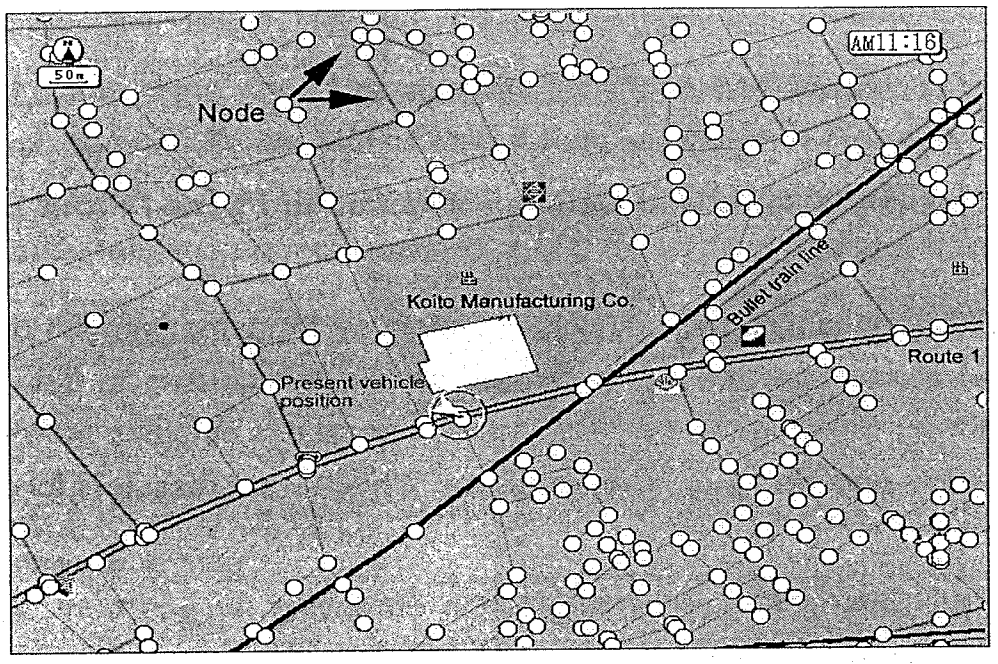

Fig. 5: A Map on Navigation System Display

Utilizing these data, it is possible to determine each driving region. In order to apply these data to the control of headlamp beams, however, it is necessary that map data bases be standardized throughout the world.

In controlling the headlamp beams, it is useful to have access to information on road surface conditions, such as the surface being dry, wet or submerged in water. It will also be useful to differentiate rainy from foggy weather. This cannot be done by analyzing wiper operations or applying a raindrop sensor.

In Japan, some vehicles in the market are already equipped with a lane departure warning system and an adaptive cruise control system, both incorporating a CCD camera as an image sensor. If CCD cameras are put to use, it will become possible to analyze weather and road surface conditions from image data with phenomenally improved accuracy. The important prerequisite, however, is that these intelligent sensors will have to become less costly.

Problems also stem from national differences in road and traffic conditions. For example, traffic density and roadside illumination on highways, country roads or city streets differ considerably from one nation to another. In trying to develop an AFS specification, experts of various nations will need to discuss issues arising from different infrastructures from one country to another.

6. Development of a Phase-II Front Lighting System

The goal of Phase-II headlamp system development is to realize optimal automotive lighting which is friendly to both human vision and the "machine vision" currently under study and which responds precisely to changes in driving conditions and operations. To realize automated driving, the lanes and obstacles must

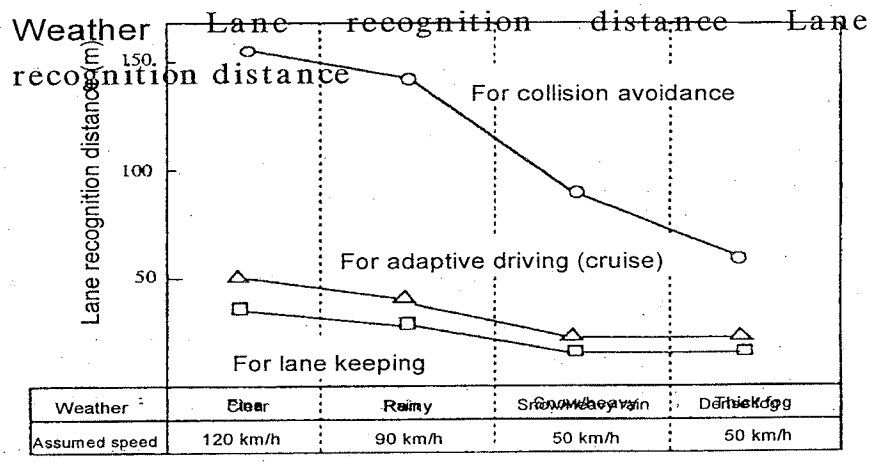

Fig. 6: Lane Detection Targets in Japan

be recognized by machine vision. Figure 6 shows the lane detection targets in Japan's research project[7].

To reach the goal, we are studying not only the basic characteristics of road surfaces, lane markings, rains and fogs, but also invisible beams projected from lamps[8]. As in the EUREKA AFS Project, it will be necessary that the largest number of researchers from across the world contribute their knowledge and insight to the development of future automotive lighting systems for ITS.

7. Acknowledgement

We would like to express our deepfelt gratitude to Prof. H.J. Schmidt-Clausen for giving us an opportunity to present this paper. We are also grateful to the AFS Project members for their support of Koito's participation in the project

8. References

(1) S. Kobayashi, K. Takahashi and S. Yagi : Development of New Forward Lighting Systems with Controllable Beams., SAE Paper 970646 ('97).

(2) S. Kobayashi and M. Hayakawa : Beam Controllable Headlighting Systems., SAE Paper 910829 ('91).

(3) K. Wada, K. Miyazawa, H. Shibata and K. Takahashi : Steerable Forward Lighting System. SAE Paper 890682 ('89).

(4) Anonymous : Intelligent Lighting Systems – Their History, Function, & General Direction of Development. – Japan has some unique characteristics that influence its on-road lighting requirements., P.19-24, No.10, Vol.106, Automotive Engineering, ('98).

(5) H. Hogrefe and R. Neumann : Adaptive Light Pattern., SAE Paper 970644 ('97).

(6) J. Damasky and W. Huhn : Variable Headlamp Beam Pattern – Lighting Requirements for Different Driving Situations., SAE Paper 970647 ('97).

(7) S. Kobayashi, K. Shimazaki, A. Hujita and S. Tugawa: Evaluation of Lane Marking Detection with Machine Vision under Poor Visibility., Report No.3152, 5th World Congress Proceedings (CD Media),5th World Congress on Intelligent Transport Systems, Seoul, Korea ('98).

(8) S. Kobayashi, S. Yagi and M. Komatsu : Measurement of Retroreflection from Road Surfaces and Lane Markings., SAE Paper 1991-01-1211 ('99).