UNITED STATES PATENT AND TRADEMARK OFFICE

BEFORE THE PATENT TRIAL AND APPEAL BOARD

VOLKSWAGEN GROUP OF AMERICA, INC.,
Petitioner

v.

YECHEZKAL EVAN SPERO,
Patent Owner

Case IPR2023-00315
U.S. Patent No. 9,955,551

PETITION FOR *INTER PARTES* REVIEW
OF U.S. PATENT NO. 9,955,551

Mail Stop PATENT BOARD
Patent Trial and Appeal Board
U.S. Patent & Trademark Office
P.O. Box 1450
Alexandria, VA 22313-1450

TABLE OF CONTENTS

I. INTRODUCTION 1
II. GROUNDS FOR STANDING (37 C.F.R. § 42.104(A)) 3
III. IDENTIFICATION OF CHALLENGE (37 C.F.R. § 42.104(B)) 3
IV. THE '551 PATENT 4
A. Summary 4
B. Prosecution History Summary 6
C. Level of Ordinary Skill in the Art 7
D. Claim Construction 7
1. "electronic circuitry apparatus for the controlled powering of the LEDs" 8
V. OVERVIEW OF APPLIED REFERENCES 8
A. Beam 8
B. Satonaka 10
C. Kobayashi 11
D. Karlsson 13
E. Nakamura 15
F. Gotou 15
VI. GROUND 1: BEAM AND SATONAKA RENDER OBVIOUS CLAIMS 24, 25, 30–33, 38–41, 46–49, AND 54–55 17
A. A POSA would have been motivated to combine Beam and Satonaka with a reasonable expectation of success. 17
B. Independent Claim Structural Elements 21
1. [24.P]/[32.P]/[40.P]/[48.P] 22
2. [24.1]/[32.1]/[40.1]/[48.1] 24
3. [24.2]/[32.2]/[40.2]/[48.2] 24
4. [24.3]/[32.3]/[40.3]/[48.3] 26
5. [24.4]/[32.4]/[40.4]/[48.4] 27
6. [24.5]/[32.5]/[40.5]/[48/5] 28
7. [24.6]/[32.6]/[40.6]/[48.6] 31

8. [24.7]/[32.7]/[40.7]/[48.7] 32

C. Independent Claim 24 Instructions 33

1. [24.8] 33

2. [24.9] 34

3. [24.10] 35

D. Claim 25 36

E. Claims 30/38/46/54 39

F. Claims 31/39/47/55 39

G. Independent Claim 32 Instructions 40

1. [32.8a] 40

2. [32.8b] 41

3. [32.9] 42

H. Claim 33 42

I. Independent Claim 40 Instructions 43

1. [40.8a] 43

2. [40.8b] 43

3. [40.8c] 44

4. [40.8d] 44

5. [40.8e] 44

J. Claim 41 45

K. Independent Claim 48 Instructions 45

1. [48.8a] 45

2. [48.8b] 45

L. Claim 49 46

VII. GROUND 2: BEAM, SATONAKA, AND KOBAYASHI RENDER OBVIOUS CLAIMS 26–29, 34–37, 42–45, AND 50–53.....48

A. A POSA would have been motivated to combine Beam, Satonaka, and Kobayashi with a reasonable expectation of success. 48

B. Claims 26/34/42/50 51

C. Claims 27/35/43/51 52

D. Claims 28/36/44/52 52

E. Claim 29/37/45/53 53

VIII. GROUND 3: KARLSSON AND NAKAMURA RENDER OBVIOUS CLAIMS 24, 25, 30–33, 38–41, 46–49, AND 54–55 54

A. A POSA would have been motivated to combine Karlsson and Nakamura with a reasonable expectation of success. 54

B. Independent Claim Structural Elements 58

1. [24.P]/[32.P]/[40.P]/[48.P] 58

2. [24.1]/[32.1]/[40.1]/[48.1] 59

3. [24.2]/[32.2]/[40.2]/[48.2] 60

4. [24.3]/[32.3]/[40.3]/[48.3] 60

5. [24.4]/[32.4]/[40.4]/[48.4] 61

6. [24.5]/[32.5]/[40.5]/[48.5] 62

7. [24.6]/[32.6]/[40.6]/[48.6] 64

8. [24.7]/[32.7]/[40.7]/[48.7] 65

C. Claim 24 instructions 66

1. [24.8] 66

2. [24.9] 67

3. [24.10] 68

D. Claim 25 69

E. Claims 30/38/46/54 71

F. Claims 31/39/47/55 71

G. Claim 32 instructions 72

1. [32.8a] 72

2. [32.8b] 73

3. [32.9] 74

H. Claim 33 74

I. Claim 40 instructions 76

1. [40.8a] 76

2. [40.8b] 76
3. [40.8c] 76
4. [40.8d] 76
5. [40.8e] 77
J. Claim 41 77
K. Claim 48 instructions 77
1. [48.8a] 77
2. [48.8b] 78
L. Claim 49 78
IX. GROUND 4: KARLSSON, NAKAMURA, AND GOTOU RENDER OBVIOUS CLAIMS 26–29, 34–37, 42–45, AND 50–53.....79
A. A POSA would have been motivated to combine Karlsson, Nakamura, and Gotou with a reasonable expectation of success. 79
B. Claims 26/34/42/50 81
C. Claims 27/35/43/51 82
D. Claims 28/36/44/52 83
E. Claim 29/37/45/53 83
X. SECONDARY CONSIDERATIONS DO NOT SUPPORT NONOBVIOUSNESS 84
XI. DISCRETIONARY CONSIDERATIONS UNDER SECTIONS 314(A) AND 325(D) STRONGLY FAVOR INSTITUTION.....86
A. The *Fintiv* factors strongly favor institution. 86
B. *General Plastic* and *Valve Corp.* strongly favor institution. 88
C. *Advanced Bionics* strongly favors institution. 88
XII. MANDATORY NOTICES (37 C.F.R. § 42.8(A)(1) 89
XIII. CONCLUSION 89

PETITIONER'S EXHIBIT LIST

Exhibit #	Description
1001	U.S. Patent No. 9,955,551 B2 to Spero ("the '551 patent")
1002	File History of Ex Parte Reexamination of U.S. Patent No. 9,955,551, Control No. 90/014,815
1003	Declaration of Dr. Jianzhong Jiao
1004	Curriculum Vitae of Dr. Jianzhong Jiao
1005	U.S. Patent No. 6,144,158 to Beam
1006	*Intentionally Left Blank*
1007	*Intentionally Left Blank*
1008	U.S. Patent No. 6,049,749 to Kobayashi
1009	WIPO Patent Publication No. 2002/004247 to Braun *et al.*
1010	WIPO Patent Publication No. 1998/054030 to Karlsson
1011	*Intentionally Left Blank*
1012	U.S. Patent No. 5,588,733 to Gotou
1013	English Translation of Japanese Unexamined Patent Application Publication H7-65603 to Nakamura et al.
1014	English Translation of Japanese Unexamined Patent Application Publication H7-101291 to Satonaka et al.
1015	Westermann, "History and Scientific Back-up," 48th Session of GRE, EUREKA Project 1403, Informal Document No. 30, April 30, 2002
1016	"Adaptive Front Lighting Systems (AFS)," 48th Session of GRE, EUREKA Project 1403, Informal Document No. 28, April 12, 2002
1017	Hogrefe et al., "Adaptive Light Pattern – A New Way to Improve Light Quality," SAE Transactions, Vol. 106, No. 6, February 27, 1997
1018	Löwenau et al., "Adaptive Light Control – A New Light Concept Controlled by Vehicle Dynamics and Navigation, SAE Transactions, Vol. 107, No. 6, pp. 33-38, February 26, 1998
1019	Manassero et al., "Adaptive Headlamp: A contribution for Design and Development of Motorway Light," SAE Transactions, Vol. 107, No. 6, February 26, 1998
1020	Michael Hamm, "System Strategies for Adaptive Lighting Systems," 2001 Symposium: Progress in Automobile Lighting (PAL), pp. 368-380, September 26, 2001
1021	*Intentionally Left Blank*
1022	*Intentionally Left Blank*

Exhibit #	Description
1023	Manassero et al., Adaptive Lighting Systems: Technical Solutions and Methodological Approach for Photometric Specifications, Progress in Automotive Lighting Vol. 6, pp. 514-525 (1999).
1024	Hanno Westermann, Lighting Performance Requirements in Vehicle Lighting Exemplified by System Requirements for AFS, Progress in Automotive Lighting Vol. 6, pp. 807-820 (1999).
1025	Diem et al., Analysis of the Eye-Movement Behaviour During Use Moveable Headlamps, Progress in Automotive Lighting Vol. 5, pp. 185-207 (1999).
1026	Kobayashi & Sugimoto, Development of the Phase-I AFS Front Lighting System, Progress in Automotive Lighting Vol. 5, pp. 449-464 (1999).
1027	Alejandro Vukotiich, Evaluation of the applicability of digital maps for the reconstruction of the real street shape, Progress in Automotive Lighting Vol. 6, pp. 774-790 (1999).
1028	Bernhard Wörner, Adaptive Frontlighting – Experimental System, Development and Functional Evaluation, Progress in Automotive Lighting Vol. 6, pp. 844-853 (1999).
1029	Mark van den Berg, Development of high Brightness LED's for Automotive Applications, Progress in Automotive Lighting Vol. 9, 987-993 (2001).
1030	Assessment of Headlamp Glare and Potential Countermeasures, Survey of Advanced Front Lighting System (AFS) Research and Technology, National Highway Traffic Safety Administration (2005)
1031	Watanabe et al., The Research on the Effectiveness of AFS Bending Lamp in Japanese Road Environment, Progress in Automotive Lighting Vol. 9, 1042-1053 (2001).
1032	*Intentionally Left Blank*
1033	*Intentionally Left Blank*
1034	U.S. Patent No. 6,127,947 to Uchida *et al*.
1035	Ex Parte Reexamination Certificate of U.S. Patent No. 9,955,552 to Spero, issued Aug. 19, 2022
1036	U.S. Patent No. 5,523,193 to Nelson
1037	U.S. Patent Application 2004/0052090 to Pederson
1038	U.S. Patent No. 4,662,746 to Hornbeck
1039	U.S. Patent No. 5,061,049 to Hornbeck
1040	U.S. Patent No. 5,933,183 to Enomoto et al.
1041	*Intentionally Left Blank*

Exhibit #	Description
1042	*Intentionally Left Blank*
1043	*Intentionally Left Blank*
1044	*Intentionally Left Blank*
1045	*Intentionally Left Blank*
1046	*Intentionally Left Blank*
1047	*Intentionally Left Blank*
1048	*Intentionally Left Blank*
1049	*Intentionally Left Blank*
1050	*Intentionally Left Blank*
1051	United States District Courts – National Judicial Caseload Profile, June 2022

I. INTRODUCTION

Petitioner Volkswagen Group of America, Inc. ("Petitioner") requests *inter partes* review ("IPR") and cancellation of claims 24–55 of U.S. Patent No. 9,955,551 ("the '551 patent") to Spero, which is purportedly exclusively licensed to Torchlight Technologies LLC (collectively "Patent Owner"). Claims 24–87 were added to the '551 patent by a Reexamination Certificate dated August 19, 2022. These new claims are directed to automatic vehicle headlight systems. The claims recite an illuminating device that is part of a motor vehicle that automatically adjusts light output based on various inputs, such as detecting other vehicles or an upcoming road curve. EX1003, ¶¶47-50.

These claims do not, however, recite a patentable invention. The claimed structure includes basic, well-known features like controllable LEDs using conventional processing, memory, and control circuitry. And the claimed instructions stored in the memory are nothing more than well-known steps commonly done in prior-art adaptive headlights, such as determining the position of an oncoming vehicle and controlling the output of a corresponding group of LEDs to reduce glare for the oncoming driver.

As early as the 1940s and 1950s, vehicles such as the Tucker Torpedo and Citroen DS-19 included headlamps that swiveled with the turning angle of the wheels via mechanical linkage. EX1030, 3-4; EX1003, ¶51. From 1992-1999, a

global consortium of headlamp and automotive manufacturers participated in the EUREKA project to advance adaptive front lighting systems (AFS). EX1003 ¶51; EX1015, 3-6; EX1016, 1-19; EX1023, 514-15; EX1024, 819.

By the mid-1990s, it was well known to detect vehicles positioned in an illumination area of the headlights and control headlight output to reduce glare. EX1014, ¶¶2-7; EX1013, ¶¶1-6, 44-45; EX1003, ¶¶52-56. And by 2000, adaptive headlamps with multiple directional light sources and sensors detected and reduced glare for oncoming/preceding vehicles. EX1003, ¶¶49, 57; EX1005, 1:5-3:44, 4:9-59; EX1010, 1:10-26, 9:18-26, 20:29-32; *see also* EX1015, 6-18, 21; EX1009, 16:6-25, 20:15-33; EX1023, 514-15; EX1024, 815-16. Arrays of independently controlled narrow-beam directional light sources (e.g., LED arrays) were developed as an improvement over traditional incandescent and gas discharge bulbs, providing adaptive light patterns from real-time feedback. EX1005, 1:5-3:44, 4:9-59; EX1010, 1:10-26, 9:18-26, 20:29-32; EX1015, 6-18, 21; EX1009, 16:6-25, 20:15-33; EX1029, 987. Moreover, using map data (e.g., GPS) to control directionality of headlamp lighting was also well known. EX1003, ¶¶55, 57; *see, e.g.*, EX1008, Abstract, 1:10-63; EX1012, Abstract, 1:6-47, 1:51-59, 3:24-4:49, 8:9-41; *see also* EX1025, 186; EX1026, 461-62; EX1024, 815-16; EX1023, 525; EX1027, Abstract.

Petitioner's expert, Dr. Jianzhong Jiao, has over 30 years of experience in adaptive lighting, automotive lighting, and optical engineering. EX1003, ¶¶9-20;

EX1004. His testimony supports the Grounds that demonstrate the conventional functionality of the ’551 reexamination patent claims, rendering the challenged claims unpatentable. EX1003, ¶¶1-20

The Board should therefore find the challenged claims unpatentable.

II. GROUNDS FOR STANDING (37 C.F.R. § 42.104(A))

Petitioner certifies that the ’551 patent is available for IPR. Petitioner is not barred or estopped from requesting IPR.

III. IDENTIFICATION OF CHALLENGE (37 C.F.R. § 42.104(B))

Ground	References	Basis	Claims Challenged
1	Beam, Satonaka	§103	24, 25, 30–33, 38–41, 46–49, 54–55
2	Beam, Satonaka, Kobayashi	§103	26-29, 34-37, 42-45, 50-53
3	Karlsson, Nakamura	§103	24, 25, 30–33, 38–41, 46–49, 54–55
4	Karlsson, Nakamura, Gotou	§103	26-29, 34-37, 42-45, 50-53

- **Beam, U.S. Patent No. 6,144,158**, issued November 7, 2000, is prior art under §102(b).
- **Satonaka, JPH07-101291**, published April 18, 1995, is prior art under §102(b).
- **Kobayashi, U.S. Patent No. 6,049,749**, issued April 11, 2000, is prior art under §102(b).

- **Karlsson, WIPO Patent Publication No. 98/54030**, published December 3, 1998, is prior art under §102(b).
- **Nakamura, JPH07-65603**, published March 10, 1995, is prior art under §102(b).
- **Gotou, U.S. Patent No. 5,588,733**, issued December 31, 1996, is prior art under §102(b).

IV. THE '551 PATENT

A. Summary

While the '551 patent's specification focuses on non-automotive systems, it also discloses headlamp systems that purportedly can "aid in seeing around curves" and control a headlamp beam such that the beam "will not blind oncoming traffic." EX1001, 51:43-67; EX1003, ¶58.

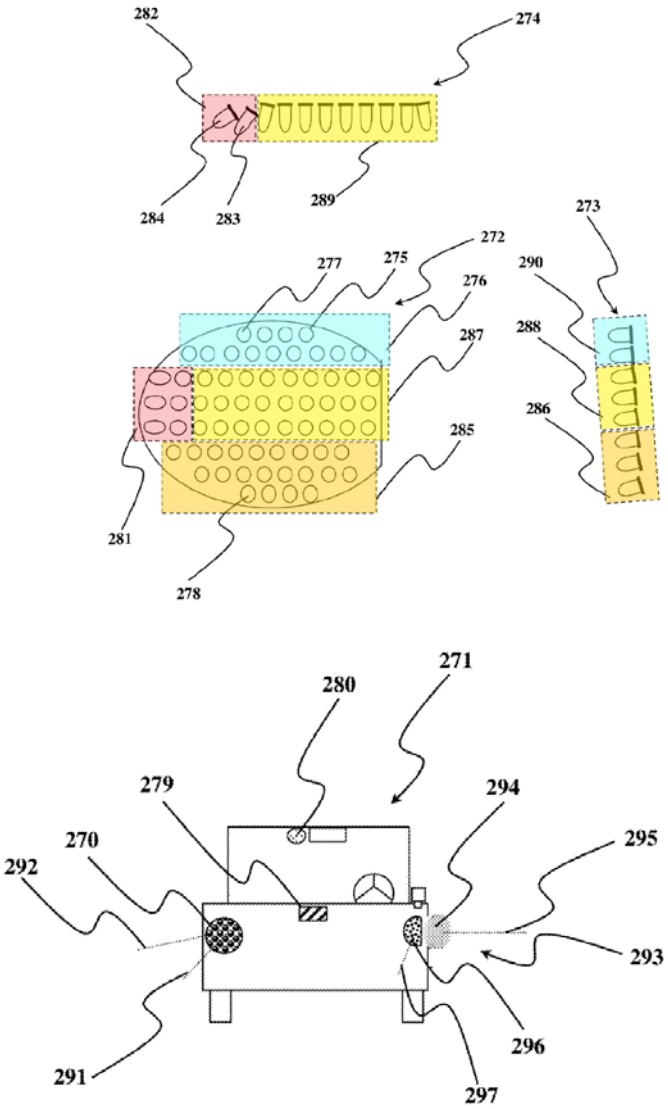

FIG. 15

EX1001, FIG. 15 (annotated).

But the ’551 patent provides little discussion of the structure and function of the claimed headlamps. Figure 15 shows headlamp 270 with LEDs 275 in an array with clusters 276, 281, 285, and 287 that are selected by controller 279 based on input from sensors 280. EX1001, 53:13-54:23; EX1003, ¶¶59-62. Controller 279 controls the clusters to achieve the desired lighting. EX1001, 53:13-54:23. For

example, anti-glare functionality is achieved by altering output of specific clusters. *Id.* The ’551 patent leaves to a person of ordinary skill in the art (“POSA”) the details of implementing *how* the controller operates to achieve this anti-glare functionality.

The ’551 patent also describes that a “GPS system on the car may also let the headlamps system know of curves up ahead, one-way traffic and others factors such [that] the headlamp may be operated in the optimal mode at that instantaneous location.” *Id.*, 51:52-56.

As the Grounds below show, a POSA would have been well aware of how to control headlamps LEDs based on sensor inputs to avoid blinding other traffic and to adapt to changing road conditions. EX1003, ¶50; EX1005, 1:5-3:44, 4:9-59; EX1010, 1:10-26, 9:18-26, 20:29-32; EX1014, ¶¶2-7; EX1013, ¶¶1-6, 44-45; EX1025, 186; EX1026, 461-2; EX1024, 815-6; EX1023, 525; EX1027, Abstract.

B. Prosecution History Summary

Patent Owner requested reexamination only of independent claim 6 of the original ’551 patent over a pair of prior-art references, and at the same time added 64 new claims. EX1002, 0035-37, 0568-89; EX1003, ¶66. The Office instituted reexamination for claim 6 only, and issued a single non-final Office Action, which rejected claim 6 over the art, and interpreted “electronic circuit[ry] apparatus” as a means-plus-function element. *Id.*, 0929-39. Patent Owner canceled claim 6 and

argued against the claim interpretation. *Id.*, 0965-67. The Office allowed the new claims and rejected Patent Owner's traversal of the interpretation of "electronic circuitry." *Id.*, 0973-80.

C. Level of Ordinary Skill in the Art

A POSA at the time of the alleged invention would have had a bachelor's degree (B.S.) in mechanical engineering, electrical engineering, optical engineering, applied physics, or an equivalent field, as well as at least 2 years of industry experience in the area of automotive lighting and lighting-control systems. EX1003, ¶¶44-46, 67. The POSA may work as part of a team, for example, with computer engineers to integrate/program controllers and various control inputs to affect control of a given light source. *Id*.

D. Claim Construction

During an IPR, claims are "construed using the same claim construction standard that would be used to construe the claim in a civil action under 35 U.S.C. 282(b)"—namely, the so-called *Phillips* standard. 37 C.F.R. § 42.100(b); *Phillips v. AWH Corp.*, 415 F.3d 1303, 1312-1313 (Fed. Cir. 2005) (en banc); *see also* 83 Fed. Reg. 51,340 (Oct. 11, 2018). Without waiver, Petitioner does not believe any claim

terms require specific construction and thus should receive their plain and ordinary meaning, in the context of the ’551 patent specification, under *Phillips*.[1]

1. “electronic circuitry apparatus for the controlled powering of the LEDs”

During reexamination, the Office interpreted this term as a means-plus-function element, and identified an exemplary corresponding structure as “logic control electronics unit 7.” EX1002, 0929-39; EX1001, 25:34-52. If the Board adopts the Office’s construction, the Office’s identified structure or equivalent—e.g., the ’551 patent’s “logic control electronics unit 7,” EX1001, 25:34-52—is disclosed by the prior art. EX1003, ¶¶68-69.

V. OVERVIEW OF APPLIED REFERENCES

A. Beam

Beam’s adaptive anti-blinding headlight/headlamp system (“AABH”) controls the intensity, shape, and/or angular position (e.g., direction) of microbeams, thereby improving driver safety. EX1005, 3:8-45, 6:53-7:13; EX1003, ¶¶70-74. Beam’s microbeam source examples include individual, controllable, light-emitting diodes (LEDs). EX1005, Abstract, claims 4, 5. Beam’s AABH detects oncoming vehicle headlights using sensors and adjusts illumination to selectively reduce

[1] Petitioner reserves the right to challenge the claims under 35 U.S.C. §112 in other forums.

illumination, thereby protecting the vision of oncoming drivers. EX1005, 4:9-25. Controller 108 controls illuminator 109, thereby controlling the optical system 106 (the headlamp unit). EX1005, 4:9-25; EX1003, ¶70. Sensor 107 inputs data to controller 108. EX1005, 4:9-25; EX1003, ¶70.

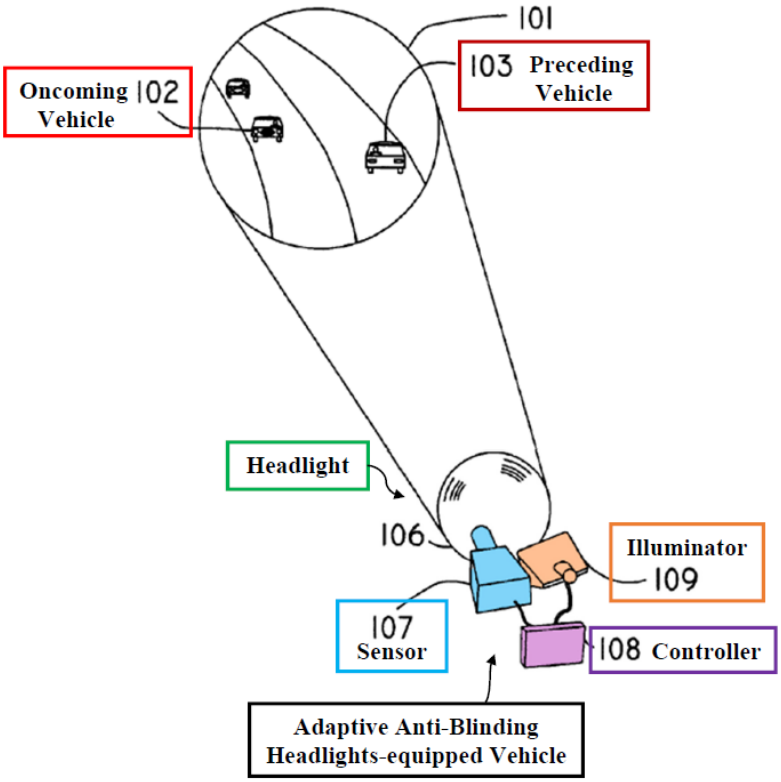

EX1005, FIG. 1 (annotated).

Significantly reduced intensity illumination, represented by shaded areas, is automatically provided to specific vehicle areas 104, 105 to reduce blinding drivers of oncoming/preceding vehicles 102, 103 while retaining high-intensity illumination elsewhere. EX1005, 2:53-3:3, 4:10-25, FIGs. 1C-1D; EX1003, ¶¶75-78. This process is dynamically updated to maintain correct illumination: "As the positions

of both vehicles move, the *blanked area tracks the location of the oncoming vehicle, dynamically varying in position and in size*." EX1005, 6:24-27[2], 5:46-54.

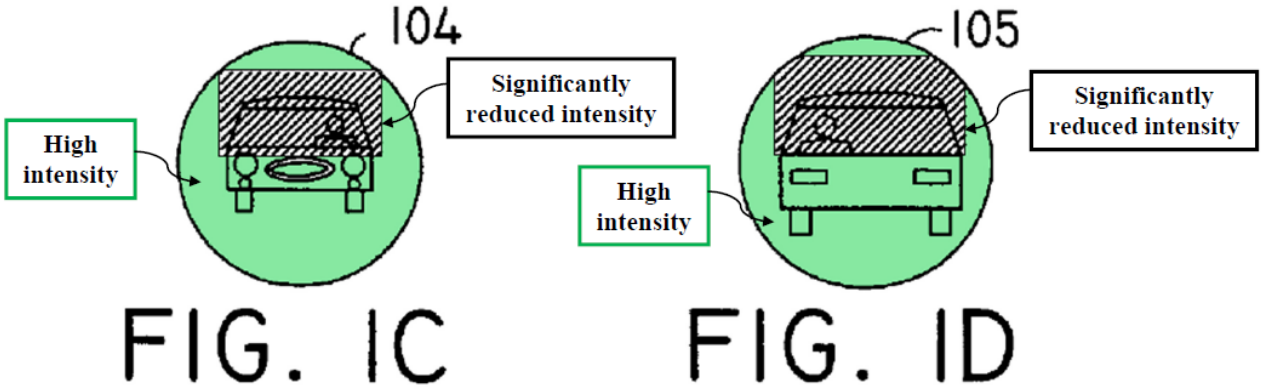

EX1005, FIGs. 1C-1D (annotated).

B. Satonaka

Satonaka's automatic vehicle headlamp system switches between light settings (e.g., high beam and low beam) based on detection of other traffic. EX1014, ¶¶7-11; EX1003, ¶79. Control device 50 controls headlamps 18 and 20. EX1014, ¶¶16-17, 21-22. Camera 22 connects to control device 60 via an image processing device 48. *Id.*, ¶22.

[2] Emphasis added unless otherwise noted.

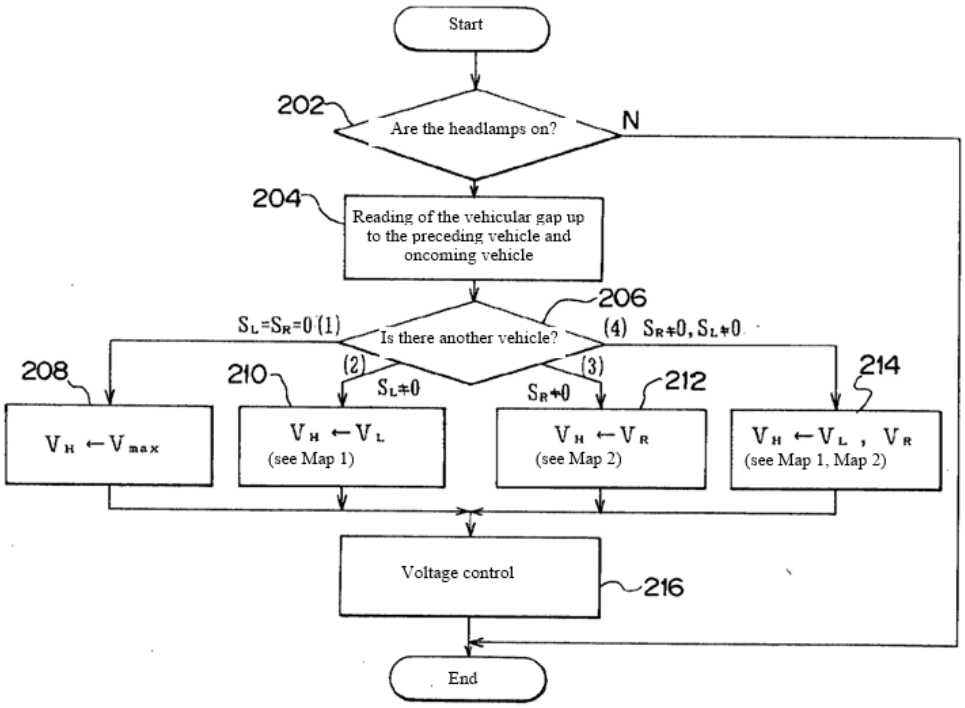

EX1014, FIG. 6.

Satonaka's detailed algorithm determines which lighting mode to activate. EX1014, ¶¶25-38. The algorithm processes each pixel in the image taken by camera 22, determining the coordinates of the oncoming vehicle target, and then activates the required lighting corresponding to the determined target vehicle coordinates in order to avoid blinding the other traffic. *Id.*, ¶¶35-45; EX1003, ¶¶80-81.

C. Kobayashi

Kobayashi controls headlight shaping (e.g., changing an "irradiating" or "illumination" direction, range, shape, etc.) based on map data/information, including GPS data and navigation beacon data. *See* EX1008, Abstract, 1:10-63;

EX1003, ¶82. Kobayashi's ECU 10 receives input "from GPS navigation device 29, steering sensor 13, vehicle speed sensor 14, direction indicating switch 15 and automatic control changeover switch 16." EX1008, 17:8-15. "GPS navigation device 29 corresponding to the road profile calculating means 2 includes: GPS receiving section 32, gyrosensor 33, calculating section 34, guide route setting section 35, map information output section 36, and display section 37." *Id.*, 17:16-20; EX1003, ¶83.

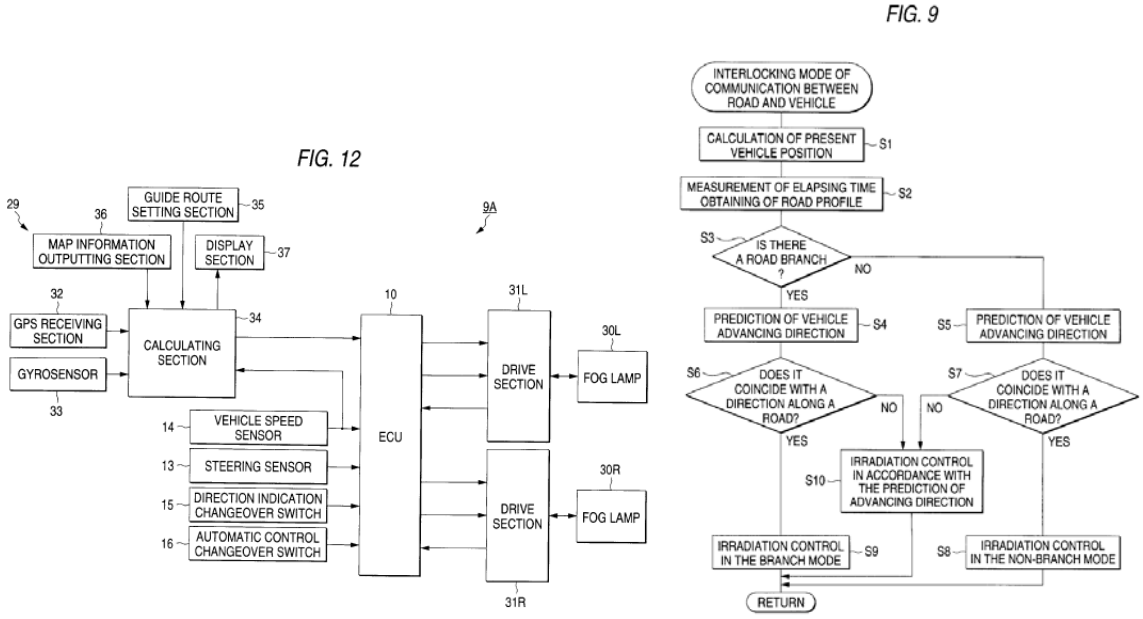

EX1008, FIGs. 9, 12.

GPS navigation device 29 sends information about the road profile and present vehicle position to ECU 10. EX1008, 17:39-40. Output signals from ECU 10 are sent to control the headlights. *Id.*; EX1003, ¶¶84-87.

FIG. 1

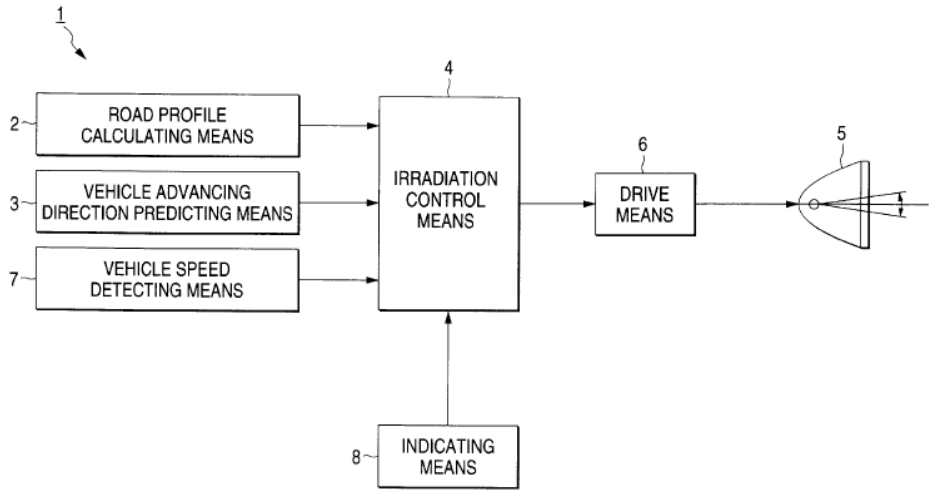

EX1008, FIG. 1.

D. Karlsson

Karlsson's headlights include LEDs with automatically controlled direction and/or intensity. EX1010, Abstract; EX1003, ¶88. Sensors detect oncoming traffic and an LED lighting pattern is automatically changed to reduce blinding oncoming traffic. EX1010, Abstract. Karlsson automatically varies the LED pattern in response to control signals from light-sensitive sensors. *Id.*, 2:30-35, 9:18-26, 13:24-14:4, FIG. 3; EX1003, ¶88.

Karlsson's spotlight beams 34 can be provided by a light source 2 composed of a grid of LEDs, controlled individually or in groups to provide the desired lighting. EX1010, 2:30-35, 9:18-26, 13:24-14:4. The emitted light beam 50 is represented as a window that can shift left to right and top to bottom, produced by

LEDs based on the data from inputs, e.g., from spotlight sensors S. *Id.*; EX1003, ¶¶89-93.

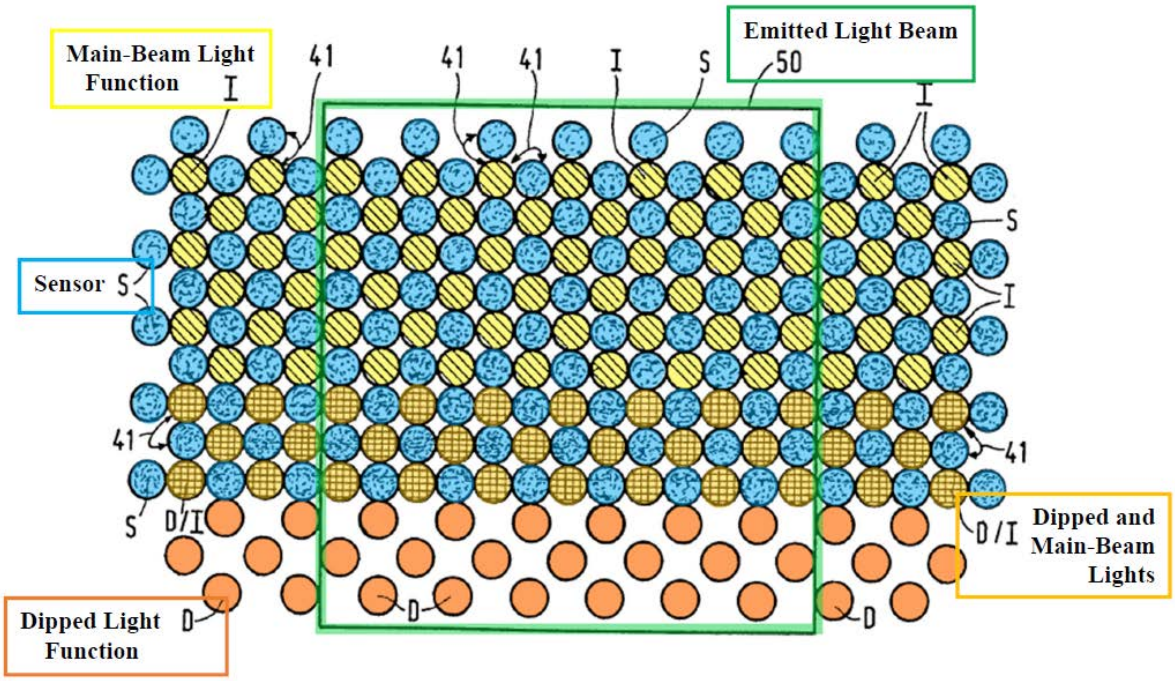

EX1010, FIG. 14 (annotated).

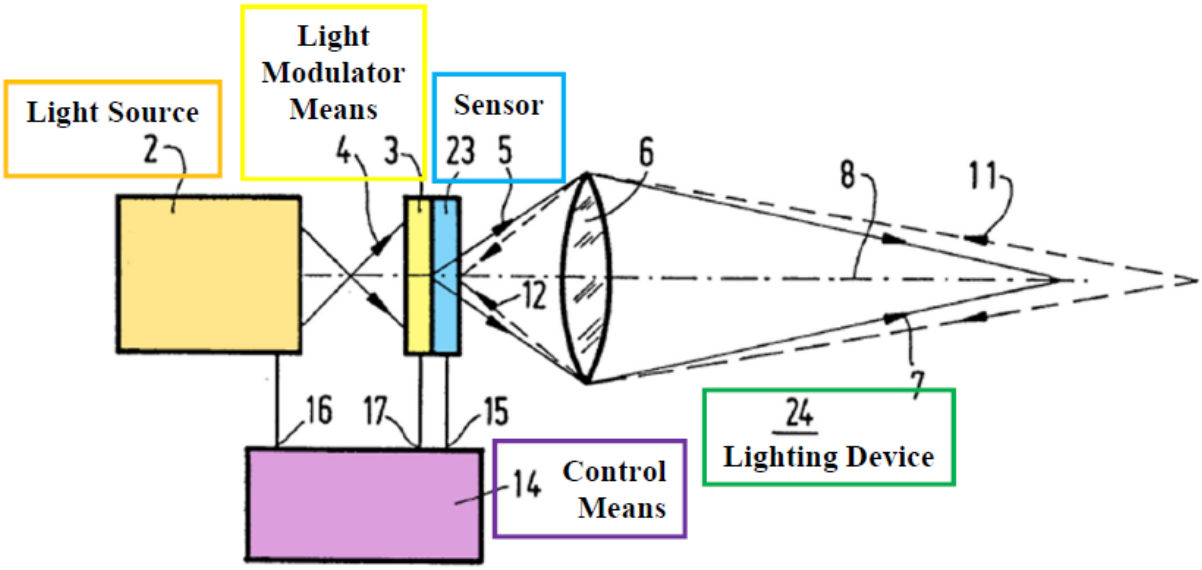

EX1010, FIG. 3 (annotated).

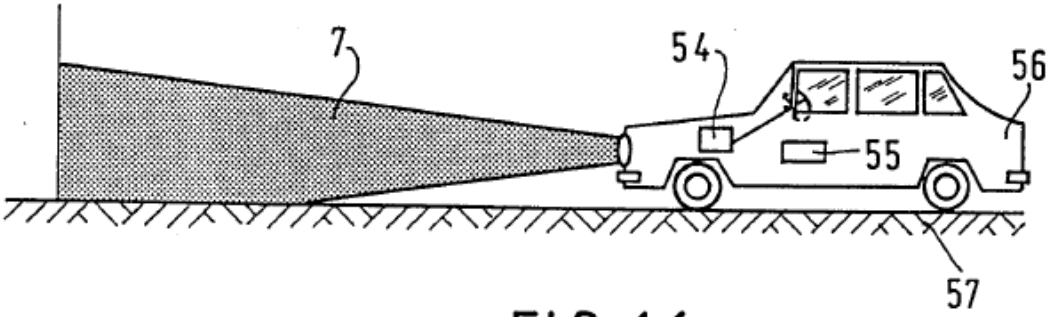

FIG. 16

EX1010, FIG. 16.

E. Nakamura

Nakamura's automatic vehicle headlamp system also reduces glare and tracks changing road conditions. EX1013, ¶¶7-10; EX1003, ¶94. Nakamura's control apparatus 50 "control[s] … the distribution of light from headlamps 18 and 20." EX1013, ¶24; EX1003, ¶94.

Nakamura's control apparatus 50 receives several different inputs to determine an appropriate light-illumination pattern, and detects vehicles as part of an anti-blinding system. EX1013, ¶¶25-48; EX1003, ¶¶95-97. Images taken by camera 22 are processed to determine oncoming vehicle coordinates, which are used to activate the required lighting to avoid blinding the other traffic. EX1013, ¶¶45-47.

F. Gotou

Gotou's headlight direction can be adjusted based on map data from GPS. EX1012, Abstract, 1:6-47, 1:51-59, 3:24-4:49, 8:9-41. When "a *curved part* or the like is *foreseen in advance in reference to both map information of the navigation*

system and information of the proper or subject vehicle position on the map, and the lighting region is changed *before* entering the *curved part*." *Id.*; EX1003, ¶98.

FIG. 2

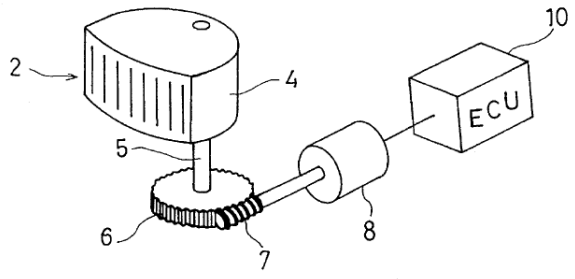

EX1012, FIG. 2.

Navigation system 30 sends map data to light distributing control ECU 10, which controls light shaping from the headlamps. EX1012, 3:52-62. Gotou provides additional details of the navigation system 30, including the GPS receiver 34, for example at 4:1-29. EX1003, ¶¶99-100.

FIG. 4

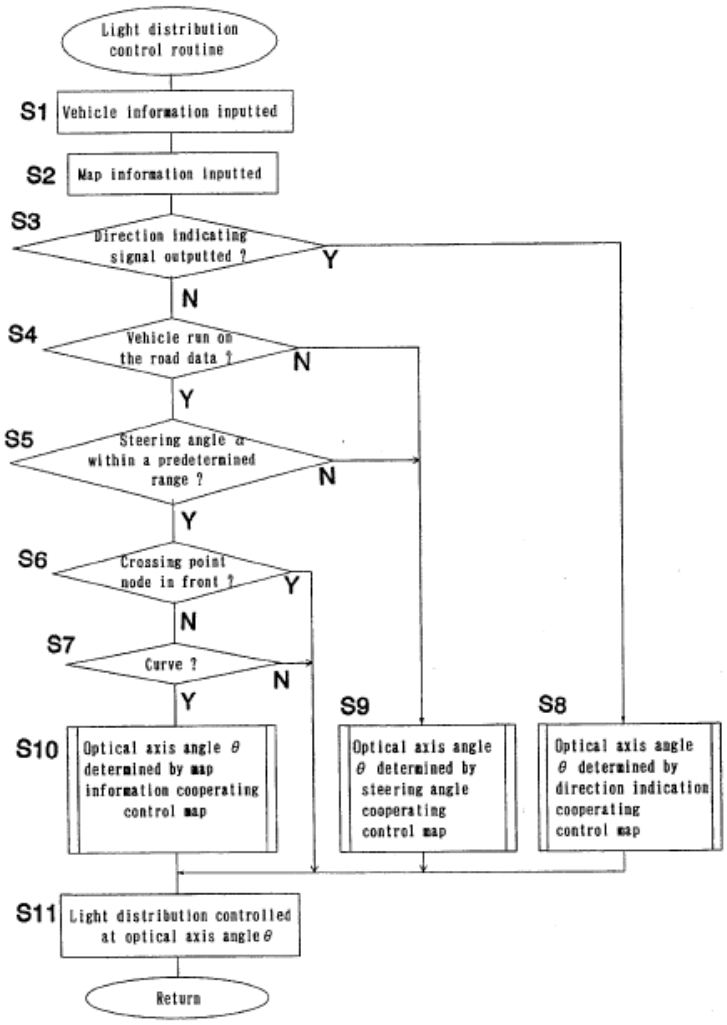

EX1012, FIG. 4.

VI. GROUND 1: BEAM AND SATONAKA RENDER OBVIOUS CLAIMS 24, 25, 30–33, 38–41, 46–49, AND 54–55.

A. A POSA would have been motivated to combine Beam and Satonaka with a reasonable expectation of success.

Beam's adaptive headlight system detects oncoming traffic and dims a portion of the headlight beam to prevent glare. EX1005, 2:53-56, 4:9-25; EX1003, ¶¶101-104; Section V.A. Beam's controller 108 receives an image from sensor 107

that is formed with pixels, and "uses appropriate algorithms on the incoming data to determine the [pixel] *locations* to be blanked, and stores them in memory 1106." EX1005, 5:33-48. Beam further discloses "determining the coordinates of said oncoming or followed vehicle." *Id.*, 8:27-28. Thus, Beam discloses receiving an image in the form of an array of pixels, and processing those pixels to determine coordinates of a target vehicle. *Id.*; EX1003, ¶104. Beam explains how each pixel is *selected* in a process involving "clock generator 1102"—producing a line clock and dot clock used to select the pixel to be processed. EX1003, ¶104; EX1005, 5:33-44.

If Patent Owner argues that Beam does not explicitly disclose determining and storing coordinates, it would have been obvious to modify Beam to do so in view of Satonaka. EX1003, ¶. Beam and Satonaka are from the same technical field—adaptive vehicle headlight systems. EX1005, 3:8-45, 6:53-7:13; EX1014, ¶¶7-11; EX1003, ¶105. Satonaka's adaptive headlight system detects vehicles by processing an "image 120 … that was obtained by camera 22." EX1014, ¶26. "Each pixel … identifies a position based on the *coordinates* (X_n, Y_n) …." *Id.*, ¶25. Satonaka details a multi-step algorithm by which the pixels are processed to determine (1) the boundaries of the roadway, and (2) the location of a vehicle in the roadway. *Id.*, ¶¶25-44; EX1003, ¶105. Thus, Satonaka discloses that the pixels are each associated with a coordinate system (here, an X, Y system) to plot the location of traffic. EX1003, ¶105.

It would have been obvious to a POSA to modify Beam's algorithm to include the coordinates of the pixels as taught by Satonaka. *Id.*, ¶¶105-110. This would have expressly provided details for the algorithm to store the coordinates and for Beam's algorithm to determine the coordinates, as taught by Beam. *Id.*; EX1005, 5:33-44. This modification only involves basic programming changes to the algorithm stored on Beam's memory, not changes to Beam's physical components. EX1003, ¶106.

Satonaka's algorithm uses coordinates to quantify the spatial locations of detected headlights in a similar system. *Id.*; *see* Section V.B. Like Beam, Satonaka's system detects headlights and processes the resulting camera image to determine the location of those headlights using X,Y coordinates for each pixel. EX1014, ¶¶25-44; EX1005, 4:9-59, 5:29-54. Thus, in view of Satonaka, a POSA would have found the details that are implicit in Beam. EX1003, ¶108.

This modification would also have been a simple combination of known elements in the prior art: Beam's system and Satonaka's coordinate-based pixel storage method. *Id.*; *KSR Int'l Co. v. Teleflex Inc.*, 550 U.S. 398, 401 (2007). Similarly, this modification would also have been the use of a known technique (Satonaka's coordinate teachings) to improve a similar system (Beam's AABH). EX1003, ¶109; *KSR*, 550 U.S. at 401, 417. This combination would have had the predictable result of providing the algorithm details for storing coordinates, in

Beam's system, from Satonaka's known technique of mapping pixels using coordinates. EX1003, ¶109. Satonaka's coordinate teachings would have predictably allowed each of Beam's pixels to be identified by location, and, correspondingly, allowed each target vehicle to be identified by spatial coordinates. *Id.* This would further ensure Beam accurately "tracks the location of the oncoming vehicle, dynamically varying in position and in size," improving illumination quality and safety for drivers. *Id.*; EX1005, 6:24-27.

A POSA would have had a reasonable expectation of success performing this modification. EX1003, ¶110. A POSA would have understood *how* to combine the teachings of Beam and Satonaka—for example, by simply modifying software instructions stored in the memory of Beam's controller/processor (in view of Satonaka). *Id*. This modification requires no physical changes, only basic programming changes, which would have been well within the skill of a POSA. *Id.*; *see KSR*, 550 U.S. at 417. Additionally, both Beam and Satonaka use the same basic architecture—a camera connected with processing circuitry and memory—and Satonaka provides details of how to implement the coordinate mapping of its pixels. EX1005, 5:33-52; EX1014, ¶¶22, 27; EX1003, ¶110. This would have provided a POSA with an easily applicable example (from Satonaka) to be implemented on a structurally similar system (Beam). EX1003, ¶110; *see KSR*, 550 U.S. at 417.

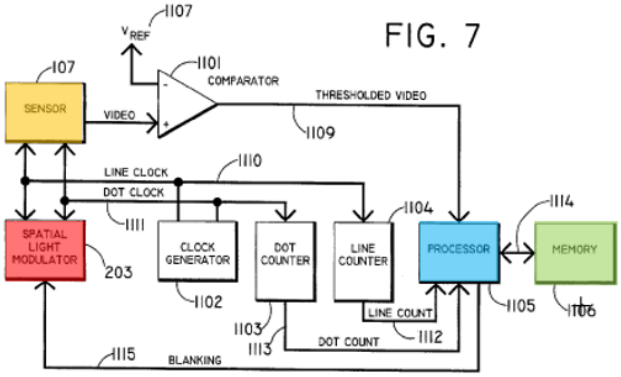

Beam

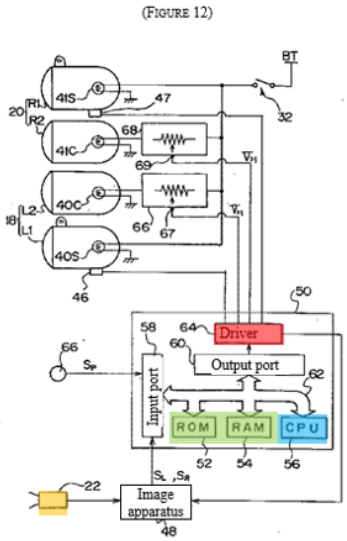

Satonaka

EX1005, FIG. 7 (annotated); EX1014, FIG. 12 (annotated).

B. Independent Claim Structural Elements

Each independent claim recites "an illuminating device" with several identical or patentably indistinct structural elements, including "memory storing instructions." EX1003, ¶111. The only differences between these claims are the stored instructions—and even the instructions recite similar or patentably indistinct elements. *Id.* The structural elements are treated together below.

1. [24.P]/[32.P]/[40.P]/[48.P][3]

Beam discloses "a method and apparatus for automatically reformatting the pattern of a [headlight] beam from a light source to prevent it from illuminating certain areas in the vicinity of a light forward of it." EX1005, 1:5-8; EX1003, ¶¶112-113. Beam's "illuminator 109 … projects the light through optical system 106 to illuminate an area shown as 101." EX1005, 1:19-21, 5:3-16.

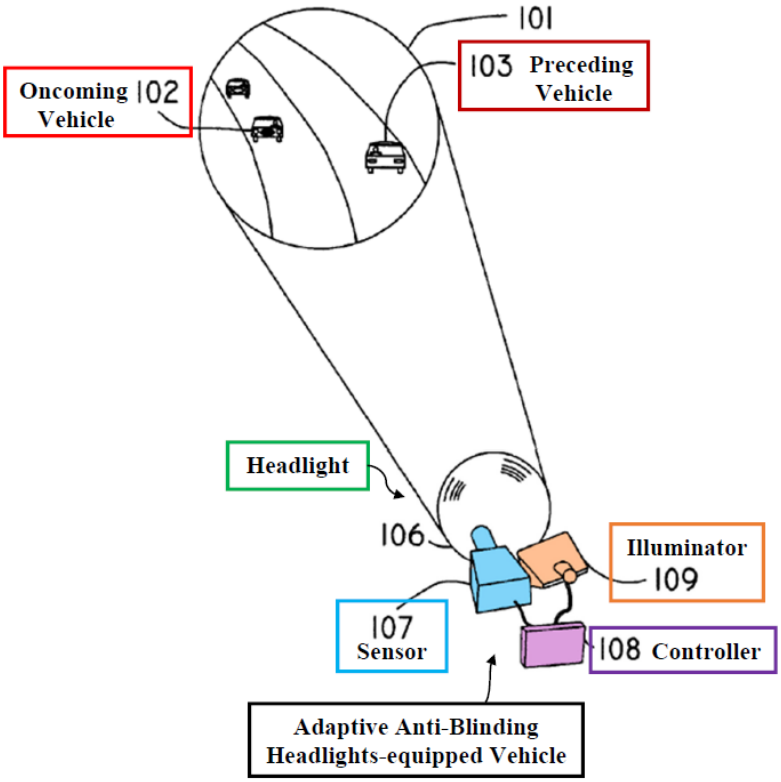

[3] Appendix A compares claims treated together. Appendix B provides all claim language. Petitioner does not concede preambles are limiting.

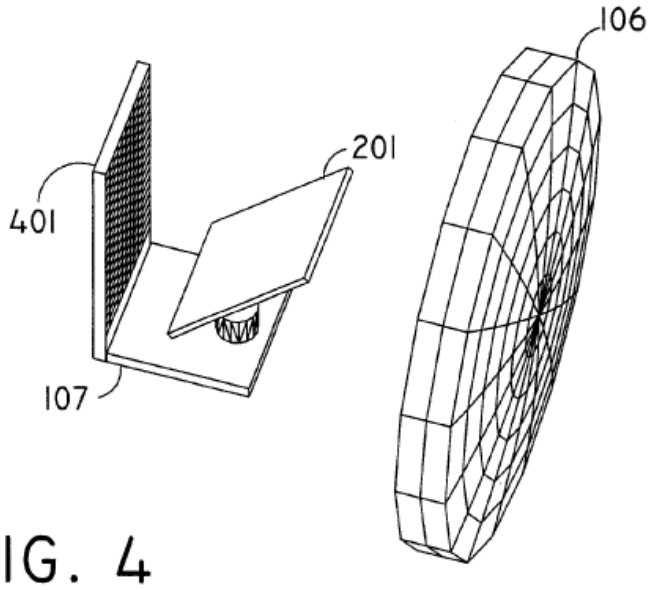

FIG. 4

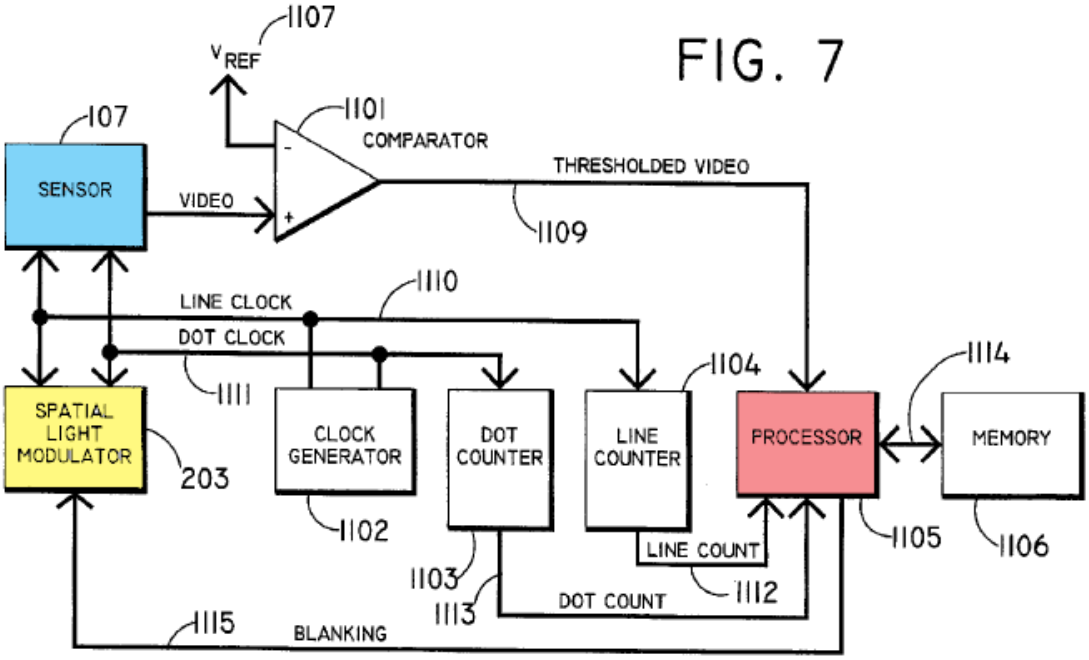

FIG. 7

EX1005, FIG. 1 (annotated), FIG. 4, FIG. 7 (annotated).

2. [24.1]/[32.1]/[40.1]/[48.1]

"In a typical automotive installation, two AABH units will be mounted on a vehicle, facing forward, just as are conventional headlights." EX1005, 6:9-11. Beam's AABH includes "illuminating device elements," including an "illuminator 109," an "optical system 106," and a "controller 108" that are all mounted to the vehicle structure. *Id.*, 1:5-18, 5:3-16; EX1003, ¶¶114-115.

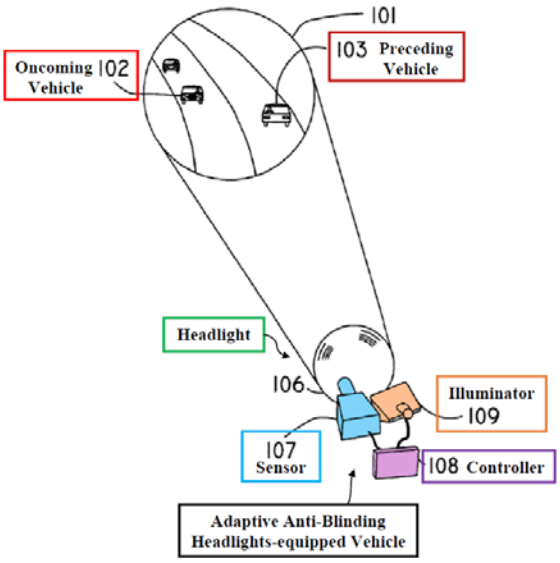

EX1005, FIG. 1 (annotated).

3. [24.2]/[32.2]/[40.2]/[48.2]

Beam's "FIG. 4 depicts a system similar to that of FIG. 2 except that the lamp 202 and spatial light modulator 203 are replaced by an *array of light sources 401* which are individually controlled." EX1005, 5:3-6. Beam discloses that the individually controlled light sources can be "*light-emitting diodes [LEDs]*, lasers, incandescent lamps, arc lamps and electroluminescent lamps." *Id.*, 8:4-12; EX1003, ¶116.

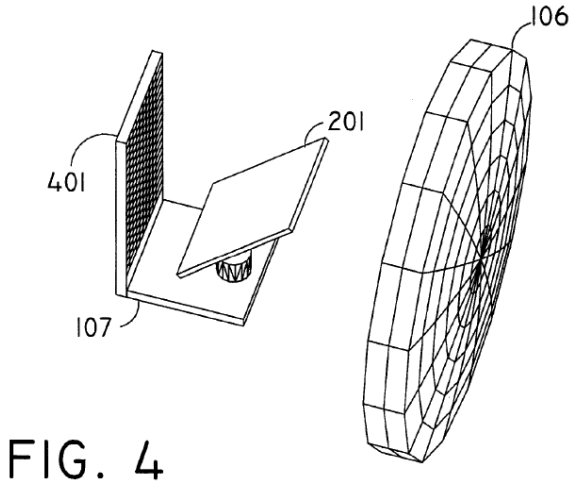

EX1005, FIG. 4.

A POSA would have understood that Beam's AABH units, and therefore the LEDs in array 401, are connected to a power source. EX1003, ¶117; *see In re Buchner*, 929 F.2d 660, 661 (Fed. Cir. 1991) ("The specification need not disclose what is well known in the art."). Other components of Beam's AABH, for example, sensor 107 produce "video or other *electrical* signals," which at least imply a power source. EX1005, 4:32-36. LEDs use a power source to operate, and thus a POSA would have understood (or found obvious) that Beam's LEDs are connected to a power source. EX1003, ¶117. To the extent that connecting the LEDs to a power source is not disclosed or obvious in view of Beam alone, Satonaka discloses that its vehicle headlamps light sources are "connected to battery BT." EX1014, ¶23. A POSA would have been motivated to connect Beam's LEDs to a power source, like the battery in Satonaka, to provide power to the LEDs for operation. EX1003, ¶¶118-119. A POSA would have had a reasonable expectation of success because

these are basic structural elements connected in ways that would have been well within the POSA's skill. *Id.*

4. [24.3]/[32.3]/[40.3]/[48.3]

"Controller 108 selectively commands reduction of the energy of the microbeams falling on a particular object" by "command[ing] spatial light modulator 203 in illuminator 109 to either divert the selected microbeams or to attenuate them." EX1005, 4:48-57, 5:46-54; EX1003, ¶120. The LEDs in Figure 4 are part of a "system similar to that of FIG. 2 except that the lamp 202 and spatial light modulator 203 are replaced by an array of light sources 401." EX1005, 5:3-6. Thus, spatial light modulator 203 is replaced with the circuitry for "controlled powering of the [LEDs]," as claimed, to selectively control "the energy of the microbeams" (LEDs). *Id.*, 4:48-57; EX1003, ¶120. Because this circuitry takes the place of spatial light modulator 203, it would be part of controller 108 and therefore would meet the requirements of the means-plus-function structure for this term, and would also meet the broader plain meaning of this term. EX1005, 4:48-57; EX1003, ¶120. Thus, the equivalent LED control circuitry is present in Figure 4's system. EX1003, ¶120.

Unsurprisingly, the '551 patent does not discuss what other illuminating device elements in its vehicle LED headlamp are controlled by the electronic circuitry apparatus. *Id.*, ¶121. Regardless, regarding the requirement that the

electronic control circuitry controls powering of "other illuminating device elements," a POSA would have understood that controller 108 controls the operation of, and therefore the powering of, parts of Beam's illuminating device including at least sensor 107, dot counter 1103, line counter 1104, memory 1106, and buses 1111/1113. *Id.*; EX1005, 5:33-54. A POSA would have understood, or found obvious, that controller 108 would use additional control circuitry that would have been part of the electronic control circuitry for this purpose. EX1003, ¶¶121-122.

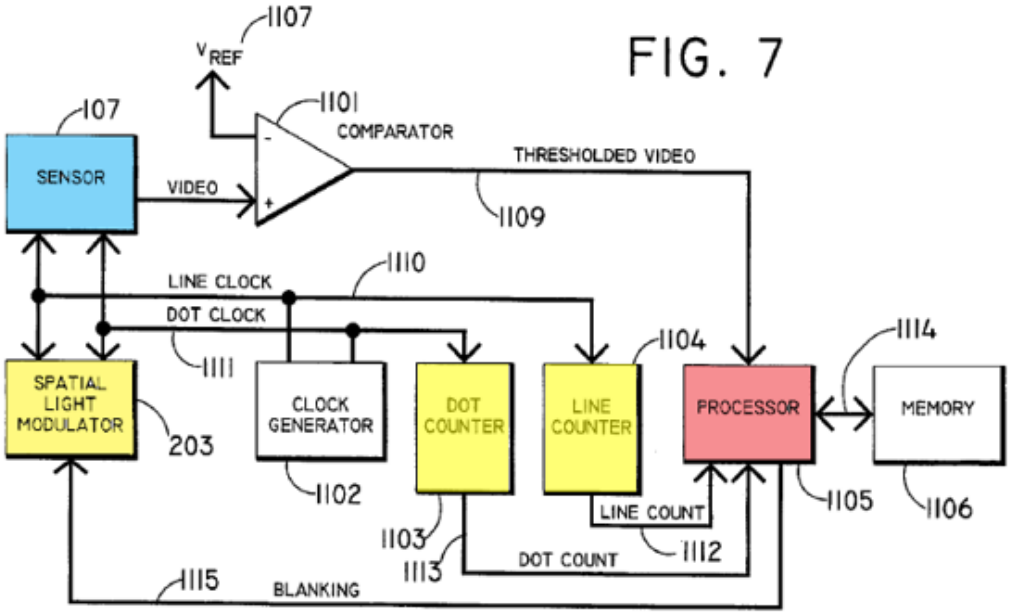

EX1005, FIG. 7 (annotated).

5. [24.4]/[32.4]/[40.4]/[48.4]

Beam's Figure 7 shows "the *electronics portion of controller 108* … [showing] the input to *a processor 1105*." EX1005, 5:33-36, 5:46-48; EX1003, ¶¶123-124.

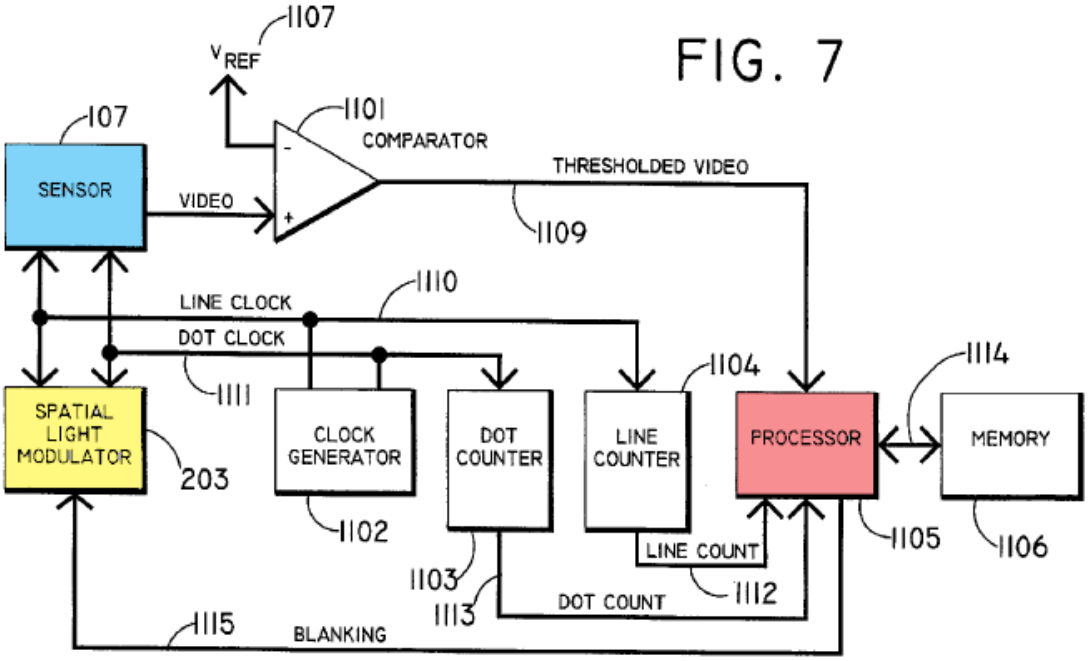

EX1005, FIG. 7 (annotated).

6. [24.5]/[32.5]/[40.5]/[48/5]

Beam's "*imaging sensor* (such as a *video camera*) faces forward." EX1005, 6:12-14. Images from "*the sensor* and are converted to *video* or other electrical signals." *Id.*, 5:10-13. Because the camera creates "electrical signals," a POSA would have understood that the camera is "in communication with power" as claimed. *Id.*; EX1003, ¶125. To the extent that this standard, powered connection is not expressly disclosed by Beam, Satonaka discloses that its vehicle headlamps are "connected to battery BT." EX1014, ¶23. A POSA would have been motivated to connect Beam's AABH to a power source, like the battery in Satonaka, to provide power to the electrical components in the AABH, including Beam's camera. EX1003, ¶125. A POSA would have had a reasonable expectation of success

because these are basic structural elements connected in ways that would have been well within the POSA's skill. *Id.*

Sensor 107 (the camera) is connected to processor 1105: "[t]he spatial scene *data from sensor 107* is thresholded to eliminate weak signals and *becomes the input to a processor 1105*." EX1005, 5:34-36. This scene data is in the form of "pixel[s]," each of which has an associated "location" received by the processor. *Id.*, 5:36-39; EX1003, ¶126. Beam "determin[es] the *coordinates* of … oncoming … vehicle[s]" based on the presence of headlights detected by the camera, further reinforcing that Beam's sensor system detects the claimed "coordinate-specific information." EX1005, 8:23-27; EX1003, ¶126. A POSA would have therefore understood that the pixels *received by the camera*, and the *location data associated with them*, are "coordinate-specific information about the illuminated area" as claimed because Beam discloses determining *coordinates* from the sensor data. EX1003, ¶126; EX1005, 5:36-44 (discussing the line clock and dot clock to select the specific pixel to be processed).

Alternatively, it would have been obvious to a POSA to modify Beam's system to map each pixel with coordinates, as taught by Satonaka, to provide the algorithmic detail implicit in Beam. EX1005, 5:36-44; Section VI.A; EX1014, ¶¶23-25; EX1003, ¶¶127-130. Thus, Beam's camera would detect the claimed "coordinate-specific information," as modified by Satonaka. EX1003, ¶130.

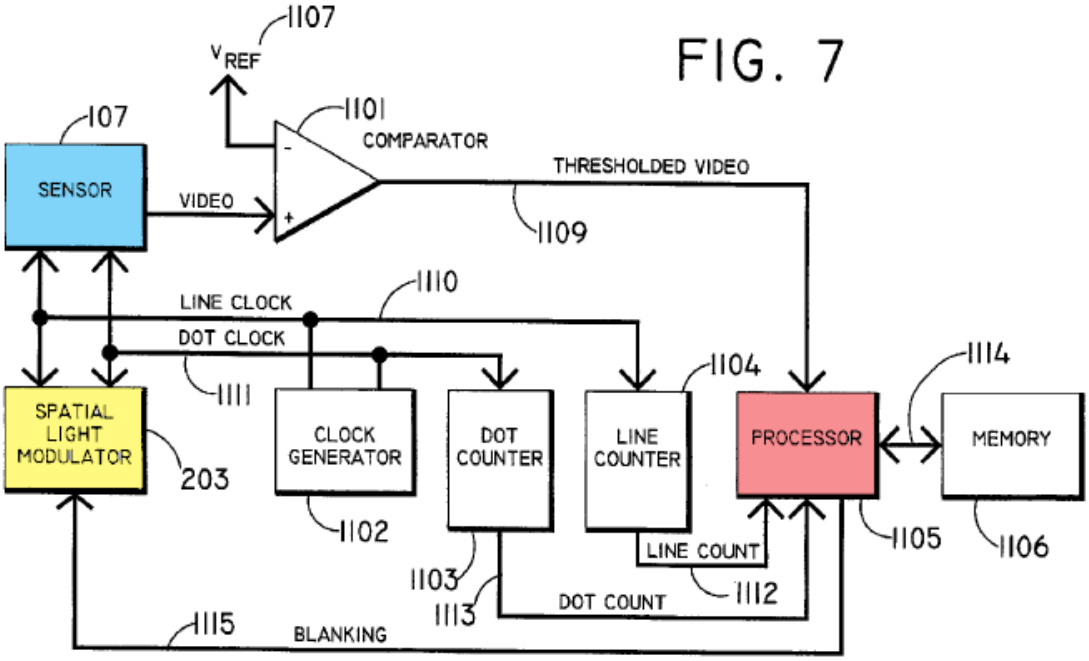

EX1005, FIG. 7 (annotated).

[40.5] further recites that the sensor is "positioned to capture an image of at least two other vehicles." EX1003, ¶131. Beam discloses that "[m]ultiple vehicles … are accommodated simultaneously by the system" and that the glare-reduction process "can be done for any number of vehicles … in the headlight beam area." EX1005, 2:62-63, 5:13-16, 6:11-13, 6:27-28, FIG. 1. Thus, a POSA would have understood that the camera captures and tracks multiple vehicles. EX1003, ¶¶131-132.

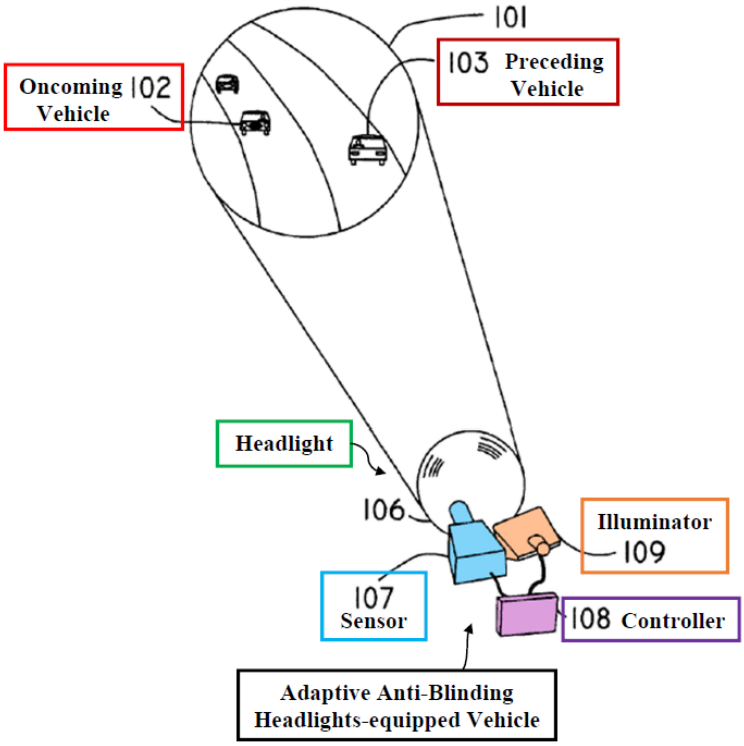

EX1005, FIG. 1 (annotated).

7. [24.6]/[32.6]/[40.6]/[48.6][4]

Beam's sensor output "drives controller 108, which uses the data to determine the size and position of the light emitters to be dimmed." EX1005, 5:13-15. Controller 108 includes processor 1105, and is "in communication with the controlling power electronic circuitry apparatus" as claimed for the reasons discussed above. *Id.*, FIG. 7, 5:13-15; EX1003, ¶133; Section VI.B.4. Further,

[4] The "controlling power electronic circuitry apparatus" lacks antecedent basis and is assumed to be the "electronic circuitry apparatus" of [24.3]/[32.3]/[40.3]/[48.3] for purposes of this Petition only.

controller 108 uses the sensor data "to determine which microbeams must be reduced in intensity to protect the other drivers." EX1005, 4:15-18. Beam's system "provides all of these functions *automatically*" and operates "continuously and dynamically," and therefore "automatically control[s]" the illumination as claimed. *Id.*, 2:63-65, 5:66-6:4, 6:65-67, 1:5-8; EX1003, ¶¶133-134.

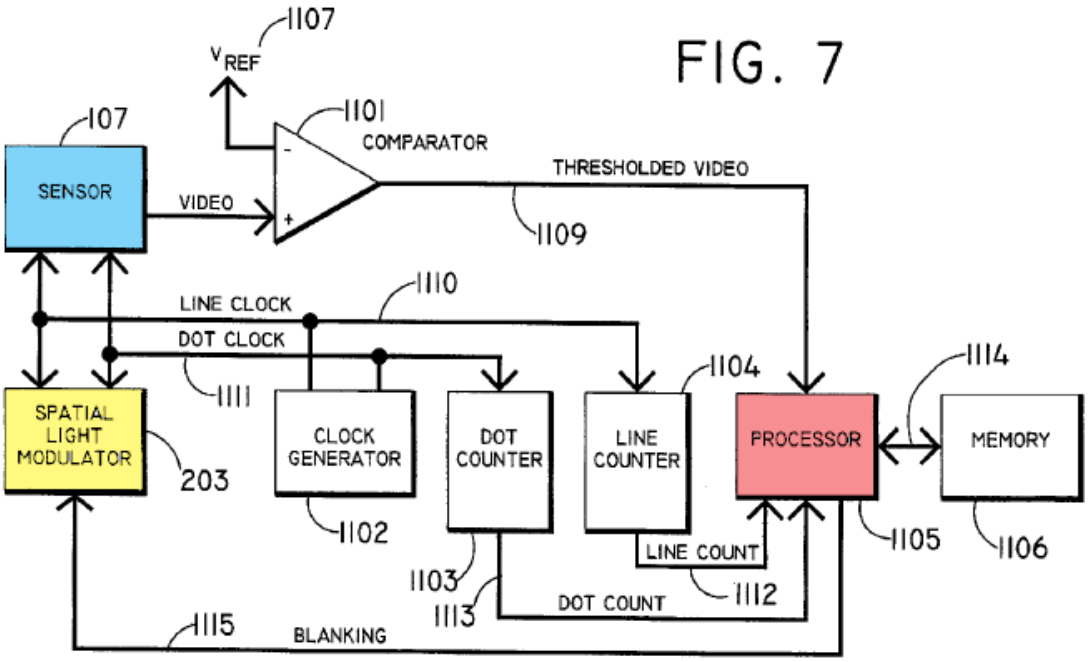

EX1005, FIG. 7 (annotated).

8. [24.7]/[32.7]/[40.7]/[48.7]

Beam's "[p]rocessor 1105 uses *appropriate algorithms* on the incoming data to determine the locations to be blanked, and stores them in *memory 1106*." EX1005, 5:33-36, 5:46-48, 6:8-39. Thus, Beam's stored algorithms are "instructions" as claimed because the algorithm causes the controller to perform certain steps. EX1003, ¶¶135-136. Beam's Figure 7 shows a bi-directional arrow

between memory 1106 and processor 1105 indicating the two-way flow of instructions and data. *Id.*

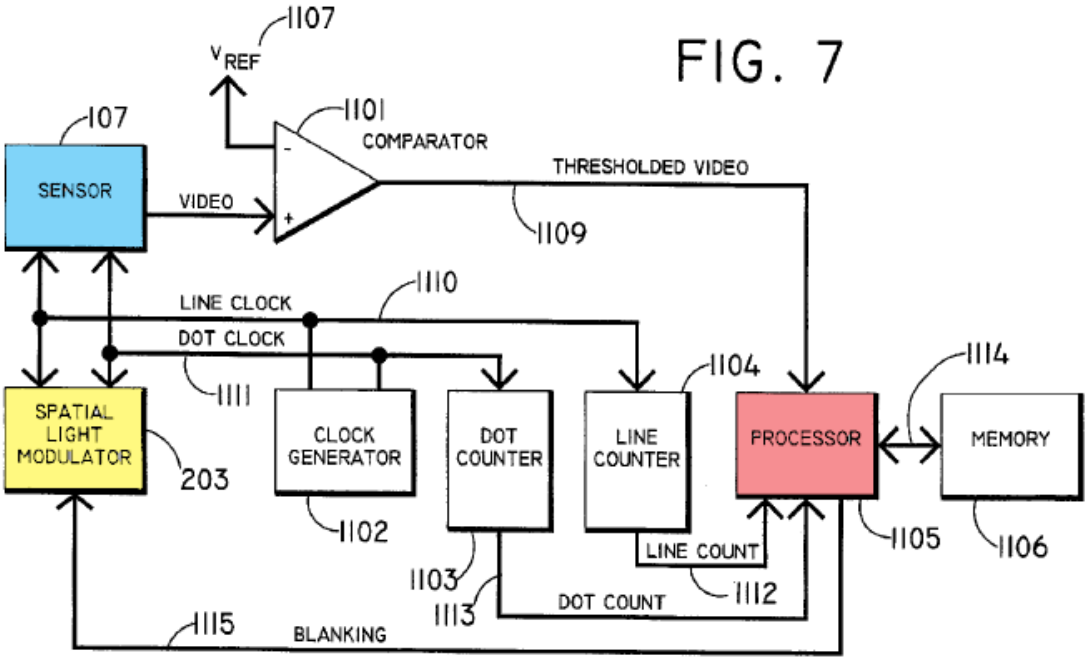

EX1005, FIG. 7 (annotated).

C. Independent Claim 24 Instructions

1. [24.8]

Beam's "controller module uses the sensor spatial data (video) to determine whether there are illumination sources (headlights or tail lights) present in the headlight's field-of-view, [and] *determines their location*." EX1005, 6:14-19. Beam also discloses "determining the coordinates of said … vehicle[s]." *Id.*, 8:26-27. Thus, Beam's system determines coordinates of other traffic (via headlights or taillights) using the coordinate-specific information (the video data from the camera). EX1003, ¶138. This enables Beam's system to determine which areas in

the overall illuminated area need to be "blanked" to avoid glare. *Id.*; EX1005, 5:33-54.

Alternatively, it also would have been obvious to modify Beam's system to include storing coordinates as taught by Satonaka. Section VI.A. The modified system would determine which pixels/coordinates correspond to the vehicle, and record those coordinates, as taught by both Beam and Satonaka. EX1005, 5:33-54; EX1014, ¶¶25-34; EX1003, ¶¶139-142.

2. [24.9]

Beam discloses that, after determining the location of the other traffic, Beam's controller "will then control the light output of *a group selected from a multiplicity of narrow angle beams*." EX1005, 2:53-59. This group can consist of one or more LEDs (microbeam sources). *Id.*; EX1003, ¶143. Further, "[b]y controlling an area determined by analyzing the position of the lights sensed ahead, the area of the beam that would dazzle the driver will be darkened." *Id.*, 2:59-3:3. This is possible because "[t]he *angular position or attenuation of each of the[] microbeams* is independently set" based on the "*spatial locations of the sources* [being] mapped into controller 108." *Id.*, 4:46-48, 4:53-57. Thus, Beam selects the cluster of LEDs having the claimed "aimings," or direction, that correspond with the detected vehicle based on the predetermined position and location of each LED (which is equivalent to knowing each LED's direction). EX1003, ¶143. The result of

this process is shown below, where a selected group of microbeams results in "illumination in the shaded areas being reduced significantly to protect the vision of the oncoming drivers." EX1005, 4:21-25; EX1003, ¶143.

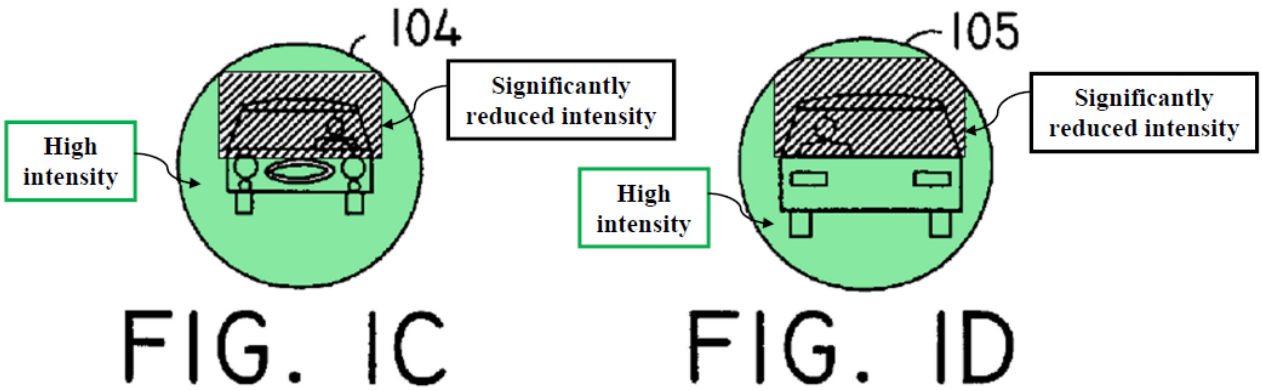

EX1005, FIGs. 1C-1D (annotated).

Thus, the selection of microbeams described above would result in selecting a group of LEDs corresponding to the detected traffic. EX1003, ¶¶144-145.

3. [24.10]

Beam discloses "[b]y controlling an area determined by analyzing the position of the lights sensed ahead, *the area of the beam that would dazzle the driver will be darkened*." EX1005, 2:56-3:3, 4:21-25; EX1003, ¶146. Reducing illumination is "chang[ing] emission" as claimed because the reduced illumination lowers the intensity of the LEDs. EX1003, ¶146. "The resulting beam is at *full intensity except* in areas that would dazzle a driver ahead." EX1005, 4:57-59. Thus, Beam maintains "a first level of illumination" in the areas around the traffic ahead, while preventing glare to the other driver. EX1003, ¶¶146-147.

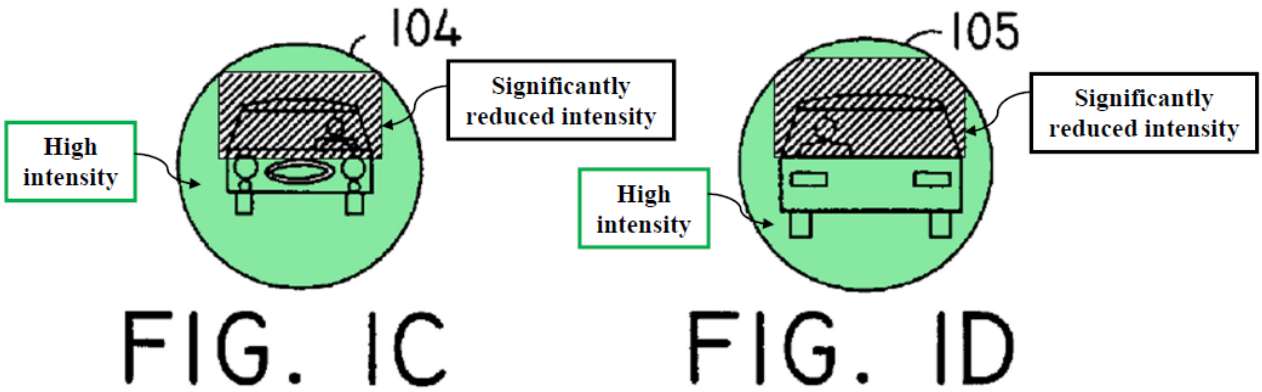

EX1005, FIGs. 1C-1D (annotated).

D. Claim 25

For the changed emission/characteristic element, Beam discloses reducing the intensity of the LEDs. Section VI.C.3 (citing EX1005, 4:21-25); EX1003, ¶148. Further, Beam discloses determining "which *microbeams* must be reduced in intensity to protect the other drivers," which confirms that multiple microbeams (LEDs) would be part of a group. EX1005, 4:15-18; EX1003, ¶148. Thus, a POSA would have understood, or found obvious, that a plurality of LEDs would have been selected as part of Beam's selected "group" because a single LED is unlikely to cover sufficient area to fully shade a target vehicle as shown in FIGs. 1C-1D. EX1005, 2:53-56; EX1003, ¶148. This is especially the case as the target vehicle gets closer and takes up more of the illuminated area. EX1003, ¶148.

For the non-contiguous element, Beam also discloses that the glare-reduction process "can be done for any number of vehicles that fall in the headlight beam [area]." EX1005, 2:62-63. This means that when there are two or more separated

vehicle targets, as would be the case in most situations with multiple other vehicles present, Beam's system would select a cluster of LEDs that are non-contiguous to cover all of the vehicle targets. EX1003, ¶¶149-150. This is illustrated in the combination of the multi-vehicle situation in Beam's Figure 1 and the disclosed dimmed areas in Beam's Figures 1C-1D. *Id*.

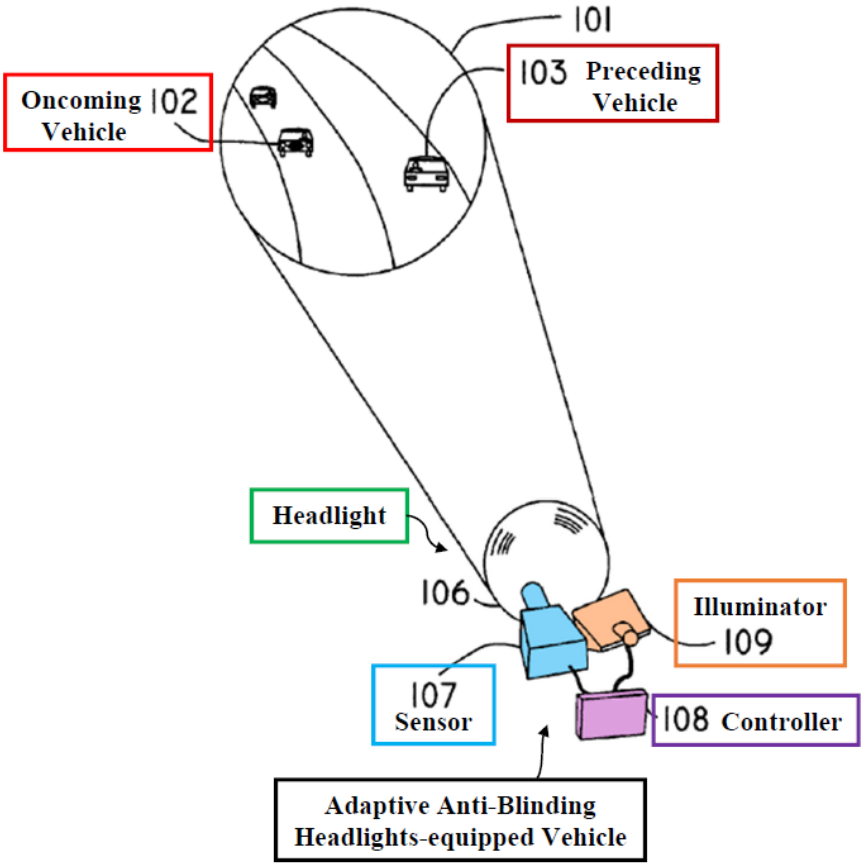

EX1005, FIG. 1 (annotated).

+

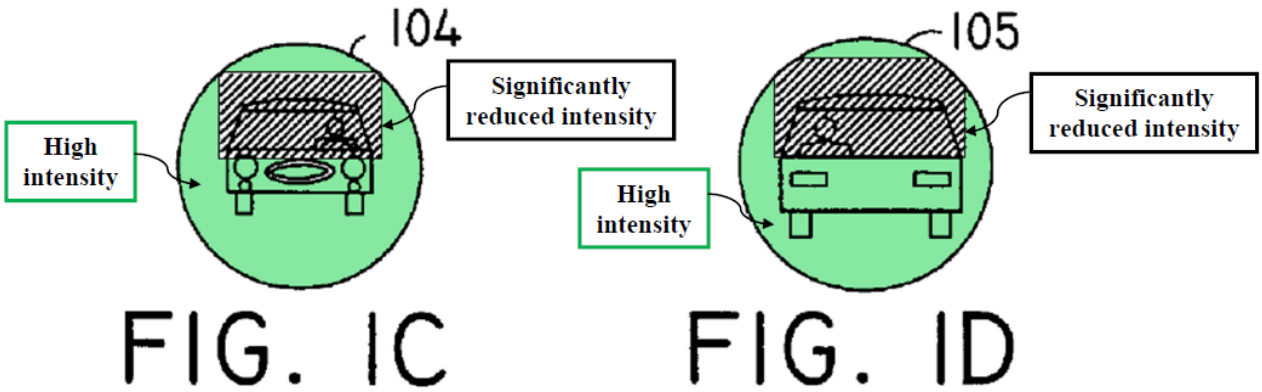

EX1005, FIGs. 1C-1D (annotated).

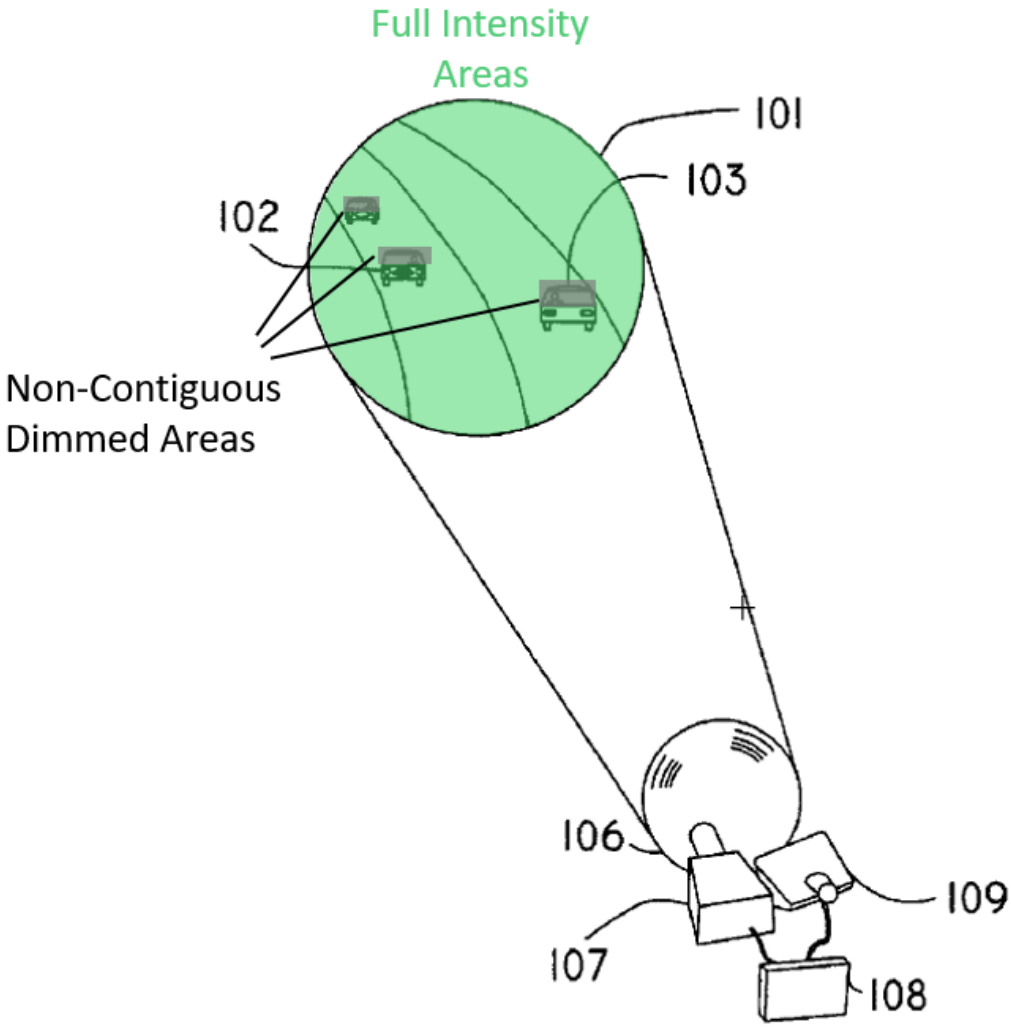

EX1005, FIG. 1 (annotated); EX1003, ¶.

E. Claims 30/38/46/54

Beam discloses these claims with at least beamsplitter 201 and spatial light modulator 203. EX1005, 4:26-59, 5:17-21, 8:4-12, 1:63-65, FIGs. 2, 5; EX1003, ¶151. Furthermore, reflectors and lenses can control the light from at least one of the microbeams (e.g., emanating from its LEDs). EX1005, 4:26-59, 5:17-21, 8:4-12, 1:63-65, FIGs. 2, 5. These are all "optical control elements" for controlling the LED light. EX1001, 9:43-46; EX1003, ¶¶151-152.

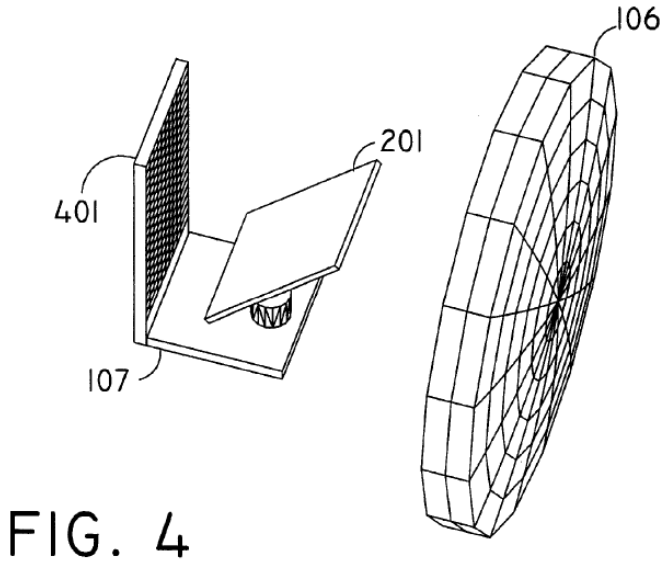

EX1005, FIG. 4.

F. Claims 31/39/47/55

These specific optical control elements are disclosed by Beam, as discussed in Section VI.E. EX1003, ¶¶153-154.

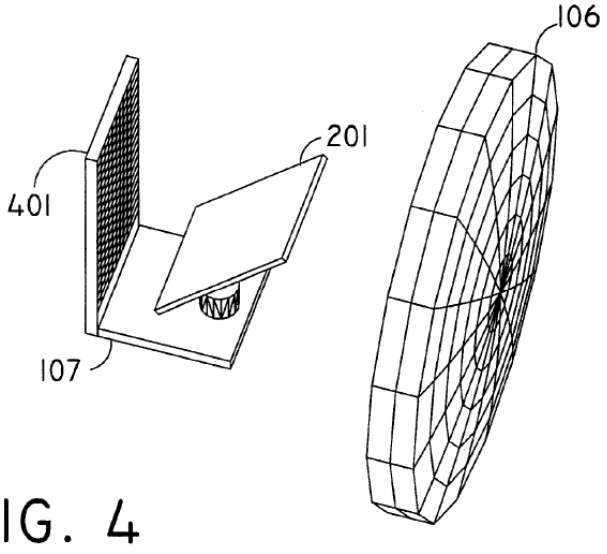

EX1005, FIG. 4.

G. Independent Claim 32 Instructions

1. [32.8a]

Beam controls the beam area "by analyzing the position of the lights sensed ahead" and reducing the intensity of the area of the beam that would dazzle the driver. EX1005, 2:56-3:3, 4:21-25, FIGs. 1C-1D; EX1003, ¶155. This reduced-intensity light in the selected group discloses the "change[] to one or more characteristics of first light" of the selected cluster. EX1003, ¶155. Further, "[t]he resulting beam is at *full intensity* except in areas that would dazzle a driver ahead," which means there are at least two different illumination intensities—full-intensity illumination and reduced-intensity illumination—at the target. EX1005, 4:57-5:2; EX1003, ¶155. Thus, the first light in Beam (the reduced-intensity light) is formed

in an illuminated area of different intensity (the full-intensity light). EX1003, ¶¶155-156.

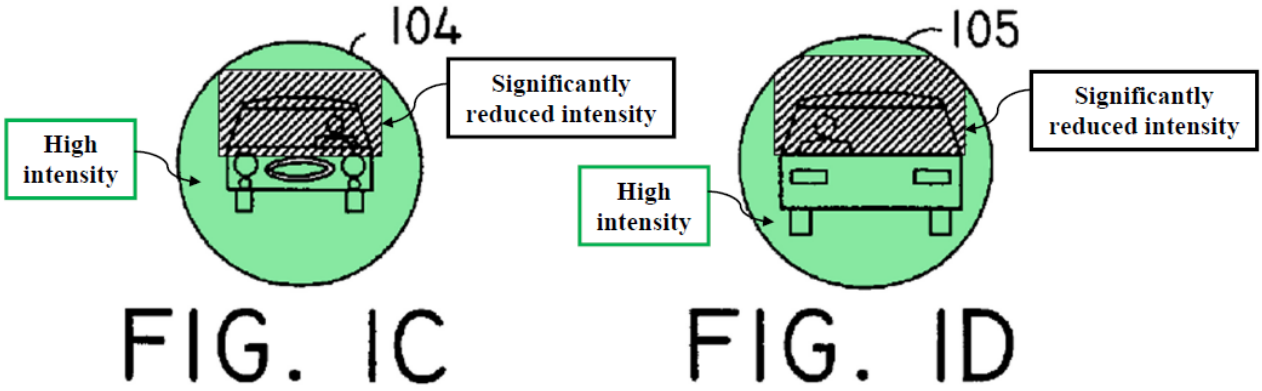

EX1005, FIGs. 1C-1D (annotated).

2. [32.8b]

Beam's reduced-illumination area targets the portion of the other traffic containing the driver. EX1005, 4:9-25, FIGs. 1C-1D; EX1003, ¶157. Thus, areas on both sides, above, and below the reduced illumination beam are part of the full-intensity beam. EX1003, ¶¶157-158.

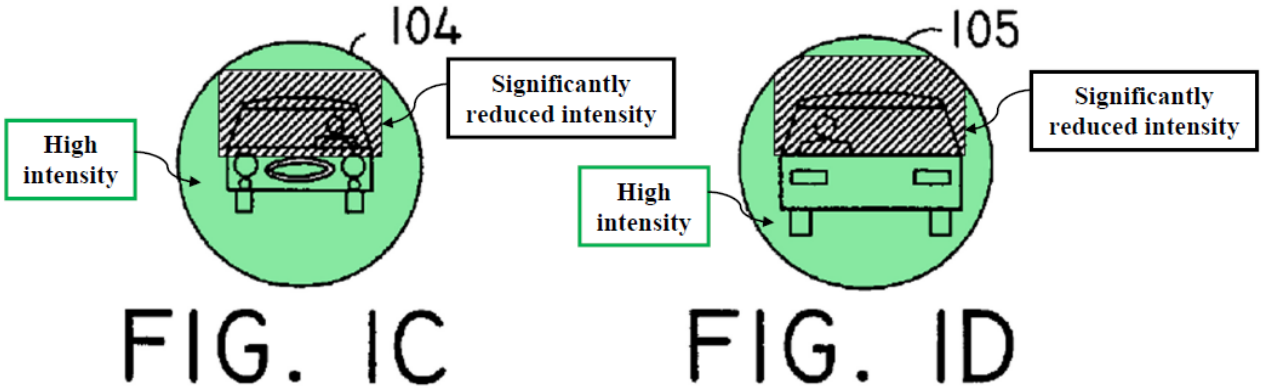

EX1005, FIGs. 1C-1D (annotated).

3. [32.9]

Beam discloses that "[a]s the positions of both vehicles move, the blanked area tracks the location of the oncoming vehicle, dynamically varying in position and in size." EX1005, 6:24-27. Thus, Beam's system actively follows the target vehicle and updates the area of diminished illumination to account for the relative motion of the target vehicle and the AABH. EX1003, ¶¶159-160.

H. Claim 33

As part of its automatic glare-reduction system, Beam's controller "automatically sens[es] the presence and location of headlights and taillights ahead," and "will then control the light output of *a group selected from a multiplicity of narrow angle beams*." EX1005, 2:53-59. Thus, Beam selects a cluster of LEDs (the microbeam sources) that correspond to the known location of the target vehicle. EX1003, ¶161. This teaches the claimed "known aimings of the first light" because the known aiming is the direction of the dimmed area that corresponds to the target vehicle. *Id.*, ¶161. Indeed, Beam states "the spatial locations of the sources [the LEDs] are mapped into controller 108," allowing the controller to select the correct LEDs based on their known positioning. *Id.*; EX1005, 4:53-57.

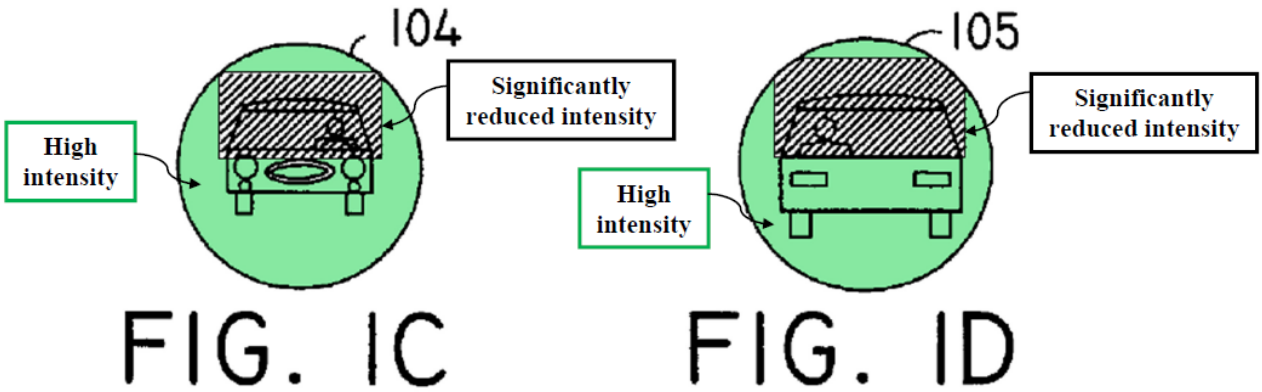

EX1005, FIGs. 1C-1D (annotated).

The remaining elements of claim 33 (changed characteristics and non-contiguous LEDs) are patentably indistinct from the elements of claim 25, and are disclosed or rendered obvious by Beam for the same reasons. Section VI.D; EX1003, ¶¶162-165.

I. Independent Claim 40 Instructions

1. [40.8a]

[40.8a] is patentably indistinct from [24.8]-[24.9], and is disclosed by Beam for the same reasons. Sections VI.C.1-2; EX1003, ¶166. The coordinates in [24.8] used to determine the cluster in [24.9] are based on the coordinate-specific information detected by the camera in [24.5], which is "data from one or more of the sensors" as claimed in [40.8a]. Sections VI.B.6, VI.C.1-2; EX1003, ¶¶166-170.

2. [40.8b]

[40.8b] is patentably indistinct from portions of [24.10], and is disclosed by Beam for the same reasons. Section VI.C.3; EX1003, ¶¶171-173.

3. [40.8c]

Beam discloses that "[m]ultiple vehicles … are accommodated simultaneously by the system" and that the glare-reduction process "can be done for any number of vehicles that fall in the headlight beam [area]." EX1005, 2:62-63, 6:27-28. As with claim 25, a second vehicle at a different position uses a different cluster of LEDs than the first vehicle, and thus Beam's system would "determine a second, different cluster" of LEDs to accommodate the second vehicle as claimed. Section VI.D; EX1003, ¶. As discussed in [40.8a], this determining process uses position data produced from the sensors. EX1003, ¶¶174-175; Section VI.I.1; EX1005, 2:56-3:3.

4. [40.8d]

[40.8d] is patentably indistinct from [24.10] because Beam discloses using the same process to repeatedly and simultaneously track multiple vehicles. Sections VI.C.3, VI.B.7; EX1003, ¶¶176-177; EX1005, 6:27-28.

5. [40.8e]

Beam discloses "[b]y controlling an area determined by analyzing the position of the lights sensed ahead, the area of the beam that would dazzle the driver *will be darkened*." EX1005, 2:56-3:3. This darkening is with respect to the "full intensity" in the areas that are not dimmed. *Id.*, 4:57-59; EX1003, ¶178. Thus, both the first cluster and second cluster (and their corresponding first and second darkened emissions) are reduced with respect to the full intensity portions of the

beams (the claimed "third emission") that illuminate the other areas, including the areas between the first and second dimmed portions. EX1005, 4:57-59; EX1003, ¶¶178-179.

J. Claim 41

Claim 41 is patentably indistinct from claims 25 and 33, and is disclosed or rendered obvious by Beam for the same reasons. Sections VI.D, VI.H; EX1003, ¶¶180-184. The addition of a second LED cluster and second direction corresponding to a second vehicle (the second claimed "known aimings") is a simple repetition of claim 33 that is disclosed by Beam. EX1005, 6:27-28; EX1003, ¶¶180-184.

K. Independent Claim 48 Instructions

1. [48.8a]

[48.8a] is patentably indistinct from elements [24.8] and [24.9], and claim 33. Sections VI.C.1-2, VI.H; EX1003, ¶185. The coordinates in [24.8] used to determine the cluster in [24.9] are based on the coordinate-specific information detected by the camera in [24.5], which is "data" as claimed here. Sections VI.C.1-2, VI.B.6; EX1003, ¶185. A POSA would have understood that the vehicle recited in [24.8], [24.9], and 33 is "an object" as claimed. EX1003, ¶¶185-189.

2. [48.8b]

[48.8b] is similar to elements [32.8a] and [32.8b], using the terms first cluster/first light and second cluster/second light versus the diminished illumination

area formed in the broader illumination area. EX1003, ¶190. These two illuminations in [32.8a]/[32.8b] are formed from first and second clusters with different light levels, as discussed above. *Id.*; Sections VI.G.1-2. The only other substantive difference is that the first and second illuminated areas must be at a common elevation. EX1003, ¶190. This requirement, along with the rest of this element, is disclosed by Beam as discussed above and as shown in Figures 1C-1D, where the reduced illumination area (shaded gray) is at a common elevation with the high intensity area (green). *Id.*, ¶¶190-192; Sections VI.G.1-2.

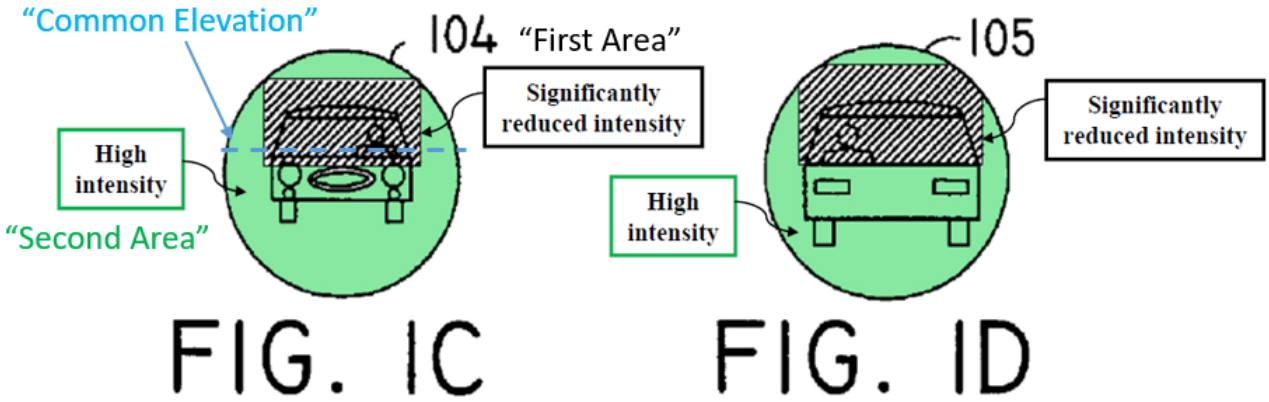

EX1005, FIGs. 1C-1D (annotated).

L. Claim 49

The majority of claim 49's elements are patentably indistinct from claims 25, 30, and 33, and are taught or rendered obvious for the same reasons. Sections VI.D, VI.E, VI.H; EX1003, ¶193. Claim 49 differs in two non-patentable ways. EX1003, ¶193. First, it further specifies that the light control "includes a change of at least

one LED of the cluster to a non-emitting state." Beam discloses selective LED control—including turning the LEDs on and off. *Id.*, ¶193; *see, e.g.*, EX1005, Abstract, 5:33-54, 4:46-48, FIG. 14. Beam "uses appropriate algorithms on the incoming data to determine the locations to be *blanked*" (terminated/turned off). EX1005, Abstract, 5:33-54. This "blanking" means that the microbeams are "attenuated by being either *absorbed* or deflected to an absorbing surface" by spatial light modulator 203. *Id.*, 4:36-41. When LEDs are used as the microbeam source, this means that the LEDs would be turned off as the equivalent to being "absorbed" by the spatial light modulator. EX1003, ¶193.

A POSA would also have understood that a larger reduction in illumination would result in a further reduction in glare, with no illumination in the specific area of the oncoming traffic resulting in no glare. *Id.*, ¶194. Modifying the output of the target LEDs to no elimination creates no glare for the driver ahead, and thus it would have been obvious to operate Beam's system in this manner. *Id.*, ¶194.

Second, claim 49 requires illumination below a "predefined glare level." There is no discussion in the '551 patent of specific glare levels or illumination values associated with glare, and thus the plain meaning of the "predefined glare level" would be any illumination level that is associated with producing glare in oncoming traffic. *Id.*, ¶195. Beam discloses the "resulting *intensity*" of the dimmed portion of the illumination results as "the benefit of reduced glare." EX1005, 3:16-

19. An "intensity," as used in Beam, is an illumination level. EX1003, ¶195. Thus, a POSA would have understood that this intensity is below a "predefined glare level" as claimed. *Id.*, ¶¶196-200.

VII. GROUND 2: BEAM, SATONAKA, AND KOBAYASHI RENDER OBVIOUS CLAIMS 26–29, 34–37, 42–45, AND 50–53.

A. A POSA would have been motivated to combine Beam, Satonaka, and Kobayashi with a reasonable expectation of success.

Kobayashi is from the same technical field as Beam and Satonaka—adaptive vehicle headlights. EX1008, Abstract, 1:10-2:35; EX1003, ¶201. A POSA would have been further motivated to modify Beam's AABH to adjust light based on map data, as in Kobayashi, to further control Beam's directional LEDs to illuminate roadway curves, thereby improving driver safety—an express purpose of Beam. EX1003, ¶201; *see, e.g.*, EX1005, 5:33-54, 3:8-45, 6:53-7:13; EX1003, ¶¶201-208.

Beam's controller 108 uses input data from sensor 107 to determine which LEDs to dim to protect other drivers, while maintaining high-intensity forward lighting elsewhere. EX1005, 4:16-19. Beam recognizes prior systems that control headlamps in response to changes in the vehicle's position (e.g., tilt on a hill) and steering mechanism (e.g., along a curve), and acknowledges those systems' safety benefits—noting that more active systems decrease the compromise between "reducing glare and providing enough light to the driver for adequate visibility." *See* EX1005, 2:1-6, 2:15-22; EX1003, ¶209. Beam does not disclose using map data, such as from GPS or navigation beacons, as an input to control the intensity, shape,

and/or angular position of the LEDs (or their resultant beam), but it would have been obvious to a POSA to do so. EX1003, ¶210. This would have made Beam's system even more active than prior systems, as Beam seeks to do, *see* EX1005, 2:15-22, and further achieves Beam's purpose of improving driver safety. EX1003, ¶210; EX1005, 3:8-45, 6:53-7:13.

Kobayashi's *techniques and system components*, like Beam, seek to enhance driver safety—by using map data-based control. EX1008, 15:6-28; EX1003, ¶211. Kobayashi's road profile calculating means 2 and vehicle advancing direction predicting means 3 are inputs to control means 4, which alters the light direction from headlamp 5 in response to map data input, directing light where it is needed at a given time. EX1008, 3:9-50, 6:4-62, FIG. 1.

A POSA would have understood that including an additional data source for Beam's controller 108, Kobayashi's map data, would have enhanced Beam's AABH by increasing illumination based on the road curvature (and directing it to needed areas), improving driver safety. EX1003, ¶¶212-218, 222. Doing so would have merely been applying Kobayashi's known technique (using map data from Kobayashi's GPS to shape and reshape light and/or adjust intensity) to Beam's similar, known device (dynamic AABH based on light sensing inputs that directs light to needed areas and away from undesired areas), in the same way. *Id.*, ¶¶212-218. Kobayashi's known technique is fully described along with its benefits (e.g.,

improved safety); thus, a POSA would have readily applied it to similar systems, such as Beam's, in the same way. *Id.*, ¶¶212-218.

Additionally, or alternatively, this modification would have been simply combining known prior-art elements (e.g., Beam's adaptive, direction-controllable LED headlamps with Kobayashi's directional control based on map data). *Id.*, ¶215; *KSR*, 550 U.S. at 401. This modification would also be using known methods (disclosed in Beam and Kobayashi) to yield predictable results (e.g., improved safety for the equipped vehicle and other vehicles on the road, further directional light control to where it is needed, and preemptive light control before entering a curve). EX1003, ¶215; *KSR*, 550 U.S. at 417.

A POSA would have had a reasonable expectation of success combining Beam and Kobayashi. EX1003, ¶216. A POSA would have understood *how* to combine the teachings of Beam and Kobayashi, for example, by simply modifying software instructions stored in the memory of Beam's controller/processor to adjust and direct light of the LEDs appropriately in view of Kobayashi's map data. *Id.* It also would have been straightforward to combine the hardware of Kobayashi's road profile calculating means 2 and vehicle advancing direction predicting means 3 (e.g., including GPS navigation device 29) with Beam's system. *Id.* Such modifications would have been routine and well within a POSA's skill due to the similarities in Beam's and Kobayashi's adaptive light control systems and methods.

Id., ¶217. Their common components were well known and there would have been no limitations for a POSA to make such modifications. *Id.*, ¶¶217-218. In applying Kobayashi's technique to Beam, a POSA would have simply been applying a known technique in a predictable way—controlling headlights based in part on map data—in the same way already disclosed in the art. *Id.*, ¶¶219-220.

B. Claims 26/34/42/50

A POSA would have been motivated to combine Beam with Kobayashi to add map-based curve anticipation to improve the performance of Beam's system. Section VII.A; EX1003, ¶221. Kobayashi discloses a lighting device that steers light ("changing an irradiating direction") based in part on map data received from GPS navigation device 29, controlled via ECU 10. EX1008, Abstract, 1:10-2:35, 4:60-64, 17:8-15, FIGs. 1, 10, 12; EX1003, ¶221. For example, "the vehicle advancing direction is predicted" and "irradiation control of the [headlight] lamp is conducted in accordance with the course." EX1008, 17:51-61, 18:1-8.

FIG. 12

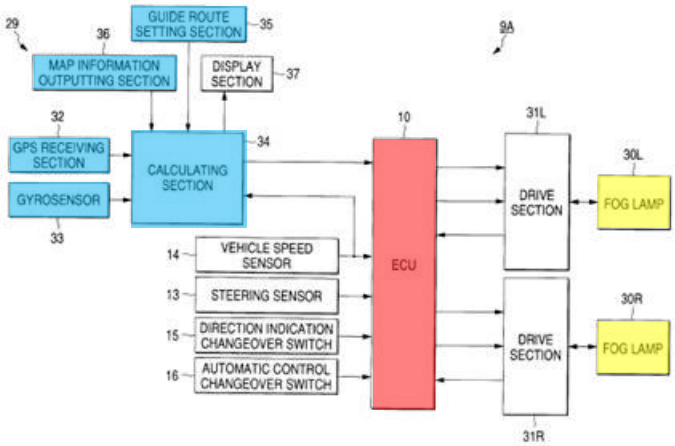

EX1008, FIG. 12 (annotated).

By including an additional data source for Beam's controller 108, Kobayashi's map data, a POSA would have realized the safety enhancement to Beam's AABH from increasing illumination based on the road curvature. Section VII.A; EX1003, ¶¶222-223.

C. Claims 27/35/43/51

The first elements of this claim are patentably indistinct from claim 25, and disclosed by Beam for the same reasons. Section VI.D; EX1003, ¶224. The final element of this claim is similar to claim 26, but requires that the road curvature tracking be accomplished by "changing illumination in at least a direction of the road curvature by adaptation of the light pattern in at least one of color, intensity or spatial distribution by … LEDs." Section VII.B; EX1003, ¶224. In Beam, a POSA would have been motivated to adapt the LED light pattern to illuminate the road curve by altering, for example, the intensity or distribution of the LEDs so that the curved roadway is properly lit. EX1003, ¶224.

Additional elements of claims 35, 43, and 51 are patentably indistinct from claim 33 (for claims 35 and 43) and claim 49 (for claim 51), and are taught by Beam for the same reasons. *Id.*, ¶¶225-226; Sections VI.H; VI.L.

D. Claims 28/36/44/52

Kobayashi discloses a "map information output section 36" used with a GPS sensor to send "road data" to the ECU for the road curvature prediction process.

EX1008, 17:16-28, 17:41-67; EX1003, ¶227. Kobayashi also uses a scheduled course of the vehicle set by the "guide route setting section 35" for "prediction of the vehicle advancing direction" to further adjust the path of the headlights. EX1008, 17:44-50; EX1003, ¶226. Thus, Beam would include map data as part of its inputs to predict the upcoming road curvatures. EX1003, ¶¶227-228; Section VII.A.

E. Claim 29/37/45/53

Kobayashi discloses sensors that are used as part of the road curvature prediction process. For example, a "GPS receiving section 32," a "gyrosensor 33," and a "vehicle speed sensor 14" are all used as input into the road prediction process. EX1008, 17:16-28; EX1003, ¶229. Kobayashi also discloses a scheduled course of the vehicle set by the "guide route setting section 35" for "prediction of the vehicle advancing direction" to further adjust the path of the headlights. EX1008, 17:44-50, 17:16-28, 17:41-67; EX1003, ¶228. Thus, Beam would include various sensors and map data (the scheduled course of the vehicle) as part of its inputs to predict the upcoming road curvatures and adjust its LEDs accordingly. EX1003, ¶¶229-231; Section VII.A.

VIII. GROUND 3: KARLSSON AND NAKAMURA RENDER OBVIOUS CLAIMS 24, 25, 30–33, 38–41, 46–49, AND 54–55.

A. A POSA would have been motivated to combine Karlsson and Nakamura with a reasonable expectation of success.

Karlsson and Nakamura are from the same technical field—adaptive vehicle headlight systems. EX1010, 1:3-7, 3:7-16; EX1013, ¶¶1, 7-9; EX1003, ¶¶232-237. Karlsson's adaptive headlight system detects oncoming traffic and dims a portion of the headlight beam to prevent glare. EX1010, Abstract, 2:30-35, 9:18-26; EX1003, ¶232. Karlsson's techniques and system of controlling individual spotlight beams emphasize safety of all drivers by enabling "higher light intensity," for example "when driving on dark, unilluminated roads," while protecting other drivers from glare. EX1010, 1:10-26, 4:17-21, 9:18-26; EX1003, ¶237.

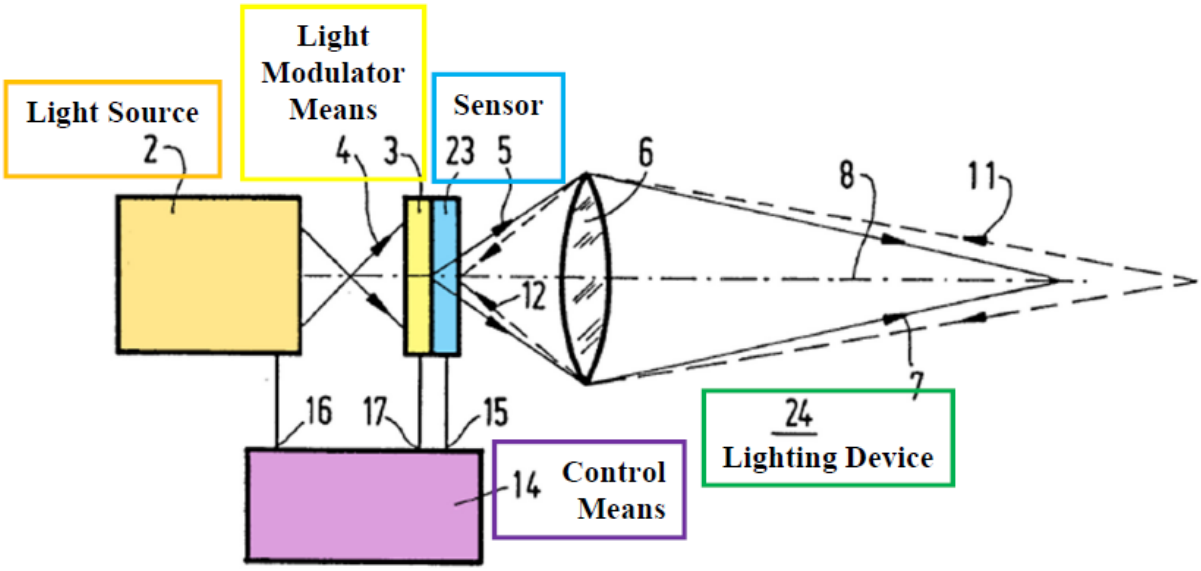

EX1010, FIG. 3 (annotated).

Karlsson's "sensors 9 and 23 are preferably designed to be capable of *precisely determining the direction* and the intensity of the detected light 11." EX1010, 12:19-22, 9:13-17. Thus, Karlsson discloses receiving an image and processing that to determine which area of the image contains a vehicle to control the headlights. EX1003, ¶238. This at least implies that Karlsson includes coordinates because the stored directions are recorded in some format (i.e., coordinates). *Application of Burckel*, 592 F.2d 1175, 1179 (C.C.P.A. 1979) ("Under 35 U.S.C. § 103, a reference must be considered not only for what it expressly teaches, but also for what it fairly suggests."); EX1003, ¶233. However, Karlsson does not expressly disclose how the direction of the target light sources is stored and processed to determine which LEDs to be dimmed to avoid glare. EX1003, ¶238.

This would have led a POSA to search for known techniques detailing how sensor information, like the images recorded in Karlsson, are stored and processed to determine which portions of the headlight beam need to be dimmed for glare reduction. EX1003, ¶239. For example, Nakamura discloses an automatic headlight system detects vehicles by processing an "image 120 that is an image that was obtained by camera 22." EX1013, ¶36. "Each pixel of the image that is formed by the image signal identifies a position based on the *coordinates* (X_n, Y_n) …." *Id.*¸ ¶25. Thus, Nakamura discloses that the pixels are each associated with a coordinate

system (here, an X,Y system) to plot the location of the other traffic. *Id.*, ¶¶36-47; EX1003, ¶¶234, 238.

If Patent Owner argues that Karlsson does not disclose producing and storing coordinates with its images, it would have been obvious to a POSA to modify Karlsson's system to include the coordinates of the pixels, and the corresponding vehicle recognition process, as taught by Nakamura. EX1003, ¶¶235, 239. This would have expressly provided the algorithm details that are already implicit in Karlsson's system, therefore allowing the coordinates of the traffic ahead to be determined based on the video sensor data. *Id.* This modification only involves basic programming changes, not changes to Karlsson's physical components. *Id.*

Karlsson teaches that "means for automatically adjusting the pattern of the light beam" use "sensors … [that] *precisely determin[e] the direction* and the intensity of the detected light 11." EX1010, 6:34-7:1, 12:19-22. Nakamura's algorithm uses coordinates to quantify the spatial locations of detected headlight targets in a system that is functionally similar to Karlsson's. *Id.*; *see* Section V.E; EX1013, ¶¶54-57 (discussing the "step[s]" that the controller's algorithm includes). Like Karlsson, Nakamura's camera detects headlights, and processes the resulting image to determine their location using X,Y pixel coordinates. EX1013, ¶¶36-47; EX1010, 2:30-35, 9:18-26, 13:24-14:4, FIG. 3. Thus, a POSA would have applied

Nakamura's teachings to implement what is implicit in Karlsson. EX1003, ¶¶240-241.

This modification would also have been a simple combination of known elements in the prior art: Karlsson's system and Nakamura's coordinate-based pixel mapping. EX1003, ¶¶242-243; *KSR*, 550 U.S. at 401. The combination would have had the predictable result of providing the algorithm details implicit in Karlsson's system through Nakamura's known technique of mapping pixels in an image. EX1003, ¶¶242-243. This modification allows each pixel to be identified by location. *Id.*; *KSR*, 550 U.S. at 401, 417. This modification would also have been the use of a known technique (Nakamura's coordinate teachings) to improve a similar system (Karlsson's headlight system). EX1003, ¶¶242-243; *KSR*, 550 U.S. at 401, 417. This would further ensure Karlsson's system accurately identifies traffic ahead and dims its headlights appropriately, improving illumination quality and safety for drivers. EX1003, ¶¶242-243.

A POSA would have had a reasonable expectation of success performing this modification. EX1003, ¶243. A POSA would have understood *how* to combine the teachings of Karlsson and Nakamura, for example, by simply modifying software instructions stored in the memory of Karlsson's controller/processor (e.g., control means 14) to include the pixel coordinates and corresponding algorithm in Nakamura. *Id.*, ¶243. This modification involves no physical changes, and only

basic programming changes, which would have been well within a POSA's skill. *Id.*; *see KSR*, 550 U.S. at 417. Furthermore, both Karlsson and Nakamura use the same overall sensor system architecture—a camera connected with processing circuitry and memory—and Nakamura explains how to implement the coordinate mapping of the pixels received by a camera. EX1010, 11:7-32; EX1013, ¶¶25-27, 36-44; EX1003, ¶243. This would have provided a POSA with an easily applicable example (from Nakamura) to be implemented on a structurally similar system (Karlsson). EX1003, ¶243; *KSR*, 550 U.S. at 417.

B. Independent Claim Structural Elements

1. [24.P]/[32.P]/[40.P]/[48.P]

Karlsson discloses "*a lighting device*, in particular a headlight of a motor vehicle, wherein the *pattern of the emitted light beam* is varied automatically in an efficient manner." EX1010, 2:30-35. Karlsson's "lighting device 24" is "for producing the desired light beam 7." *Id.*, 11:7-10, FIG. 3; EX1003, ¶¶244-245.

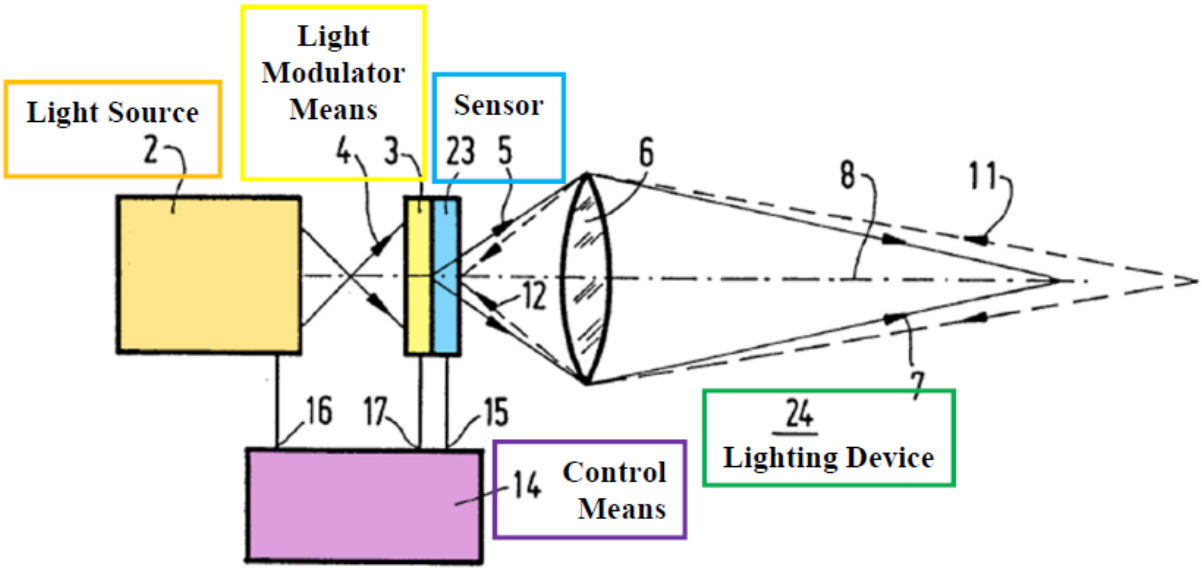

EX1010, FIG. 3 (annotated).

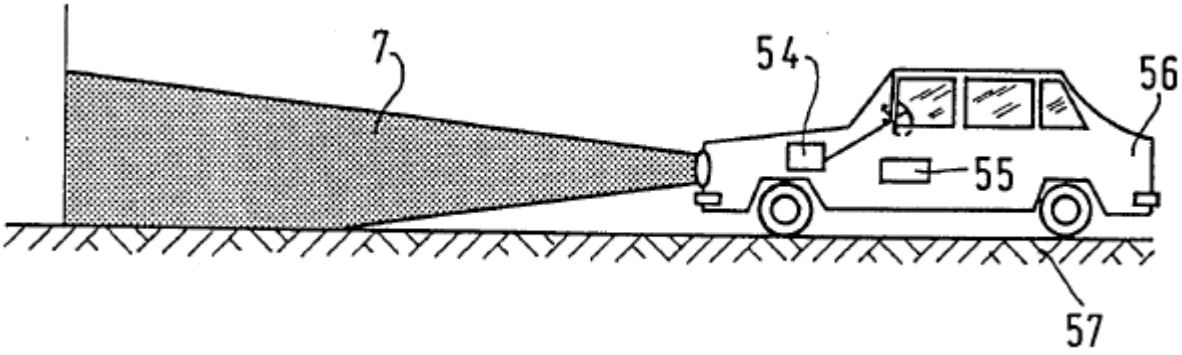

EX1010, FIG. 16.

2. [24.1]/[32.1]/[40.1]/[48.1]

Karlsson discloses "a *headlight of a motor vehicle*." EX1010, 2:30-35, 11:29-32, 20:16-32, FIG. 16; EX1003, ¶¶246-247.

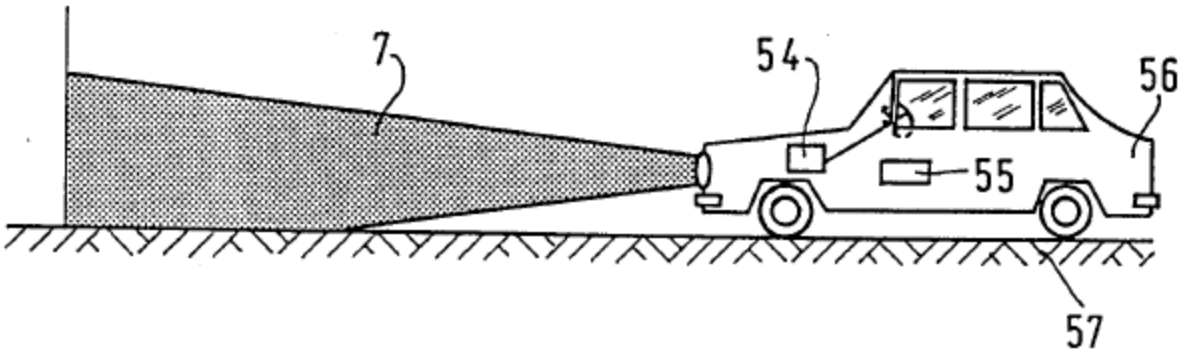

EX1010, FIG. 16.

3. [24.2]/[32.2]/[40.2]/[48.2]

Karlsson focuses on "headlights of a car" that include "a plurality of controllable spotlight beams … *for example[,] a light beam from [a] LED.*" EX1010, 11:29-32, 13:24-29. A POSA would have understood, or found it obvious, to use LEDs as individually controlled light sources because light patterns using LEDs "can be simply effected by switching one or more of the spotlight beams 34 [the LEDs] on and/or off, or by adapting the intensity" of the LEDs. *Id.*, 13:33-36; EX1003, ¶248.

Karlsson states "[f]or the sake of clarity, the *electric energy source or the power supply source* for the light source 2 … are not shown." EX1010, 8:35-9:2. Thus, a POSA would have understood that Karlsson's headlamps, including its LEDs, are connected to a power supply. EX1003, ¶¶249-250.

4. [24.3]/[32.3]/[40.3]/[48.3]

Karlsson's "*control means 14* are arranged to selectively switch the individual small light sources, or a group of individual small light sources, on and off, or to

selectively adjust the light intensity of a respective spotlight beam 34 … so as to provide a desired lighting pattern." EX1010, 14:22-30. Karlsson includes "an *electrical connection* between the [LEDs] … which, for example, may consist of *transistors or the like*." *Id.*, 19:36-20:5; EX1003, ¶251. A POSA would have understood these electric circuitry components (e.g., transistors) are for controlled powering of the LEDs because of their known functions and arrangement in Karlsson. EX1003, ¶251. Because this circuitry is part of the controller (control means 14), it meets both the plain meaning and any potential means-plus-function structure for this term. *Id.*

Regarding power control of the claimed "other of the illuminating device elements," Karlsson's electronic circuity includes "control electronics 41" integrated into a combined "printed circuit board." EX1010, 20:1-5. A POSA would have understood, or found obvious, that control electronics 41 would control the powering of at least the sensors because they are intended to control operation of these components. EX1003, ¶¶252-253.

5. [24.4]/[32.4]/[40.4]/[48.4]

Karlsson's system includes "*processor-controlled control means 14*." EX1010, 20:12-15, 21:36-22:2 ("The control means may [include] … *a microprocessor*."), 21:36-22:1, FIG. 15; EX1003, ¶¶254-255.

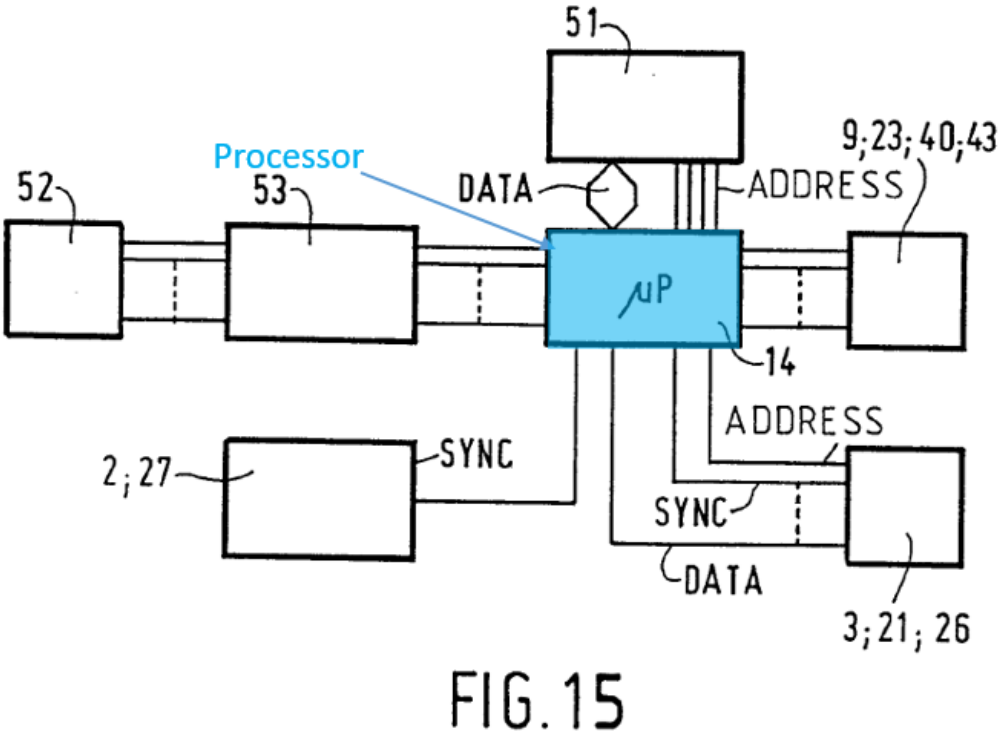

EX1010, FIG. 15 (annotated).

6. [24.5]/[32.5]/[40.5]/[48.5]

Karlsson discloses that its sensors are "capable of precisely determining the direction and the intensity of the detected light" by using, for example, "a photo-sensitive plate as used in *modern video cameras*." EX1010, 12:19-24; EX1003, ¶255. Karlsson also discloses that a power source powers "the light-sensitive sensor 9." EX1010, 8:35-9:1; EX1003, ¶256. A POSA would have understood that, like sensor 9, sensor 23 is connected to the power source to enable Karlsson's system to receive sensor data. EX1003, ¶256. Karlsson also discloses that "control means 14 are arranged to *selectively switch* the individual small light sources, or a group of

individual small light sources, *on and off* … in *response to a control signal from sensor means 23*." EX1010, 14:22-30. Thus, Karlsson's control means 14, which includes a processor, is in communication with sensor 23 to receive the control signal. EX1003, ¶256.

Karlsson's "sensors 9 and 23 are preferably designed to be capable of *precisely determining the direction* and the intensity of the detected light 11," which is a spatial location of the detected light. EX1010, 12:19-22, 9:18-22. A POSA would have therefore understood that images received by the camera, and the direction data associated with them, are "coordinate-specific information about the illuminated area" as claimed because the direction is stored in a format (as coordinates). EX1003, ¶¶256-257; *see Burckel*, 592 F.2d at 1179.

Alternatively, it would have been obvious to a POSA to modify Karlsson's system to map the image with coordinates, as taught by Nakamura, to provide the algorithmic detail implicit in Karlsson. EX1003, ¶¶258-260; Section VIII.A; EX1013, ¶¶36-47. Thus, Karlsson's camera would produce the claimed "coordinate-specific information" as modified by Nakamura. EX1003, ¶¶258-260.

[40.5] further recites that the sensor is "positioned to capture an image of at least two other vehicles." *Id.*, ¶261. A POSA would have understood that Karlsson's system would automatically function to detect and reduce illumination on any number of targets vehicles, including a second vehicle having a second position. *Id.*,

¶261. Karlsson's camera (sensors 9/23) receives "incident light 11 on … lens 10", and thus has a field of view that coincides with the illuminated area of the headlight, which is an area that can include many vehicles. *Id.*; EX1010, 8:19-23, FIG. 1. Indeed, Karlsson references protecting "traffic" from glare, which a POSA would have understood includes multiple vehicles because of the general volume of vehicles present on the roadways in the relevant timeframe. EX1003, ¶261; EX1010, 9:18-26. Thus, a POSA would have understood, or found it obvious, that the sensors track multiple vehicles to achieve this functionality. EX1003, ¶¶261-262.

7. [24.6]/[32.6]/[40.6]/[48.6]

In Karlsson, "*control means 14* are arranged to selectively switch the individual small light sources, or a group of individual small light sources, on and off … in response to a control signal from *sensor means 23*, so as to provide a desired lighting pattern." EX1010, 14:22-30, 9:6-8; EX1003, ¶263. Thus, the processor in control means 14 is processing the information from the cameras in Karlsson. EX1003, ¶263. A POSA would have understood that control means 14, which includes a processor, is "in communication with" the electronic control circuitry discussed above, because otherwise the processor cannot command the electrical circuitry to power on/off or dim the desired LEDs as Karlsson discloses.

EX1003, ¶¶263-264; Sections VIII.B.4-5. Karlsson also discloses that its system is "arranged for *automatically* forming a lighting pattern." EX1010, 20:6-10.

8. [24.7]/[32.7]/[40.7]/[48.7]

Karlsson discloses that its control means includes "*memory means 51*." EX1010, 20:12-15. Further, "*non-volatile memor*y *51* [of the] type PROM, EPROM or EEPROM may be used for *storing and recording* the various adjustments." *Id.*, 22:3-4; EX1003, ¶265. A POSA would have understood that the steps taken by the processor discussed above in [24.6] are "instructions" because they govern operation of the processor. EX1003, ¶¶265-266. Further, a POSA would have understood that these instructions must be stored for access by the processor in memory 51 because otherwise the processor (and control means 14) would not be able to access the instructions for operation. *Id.*

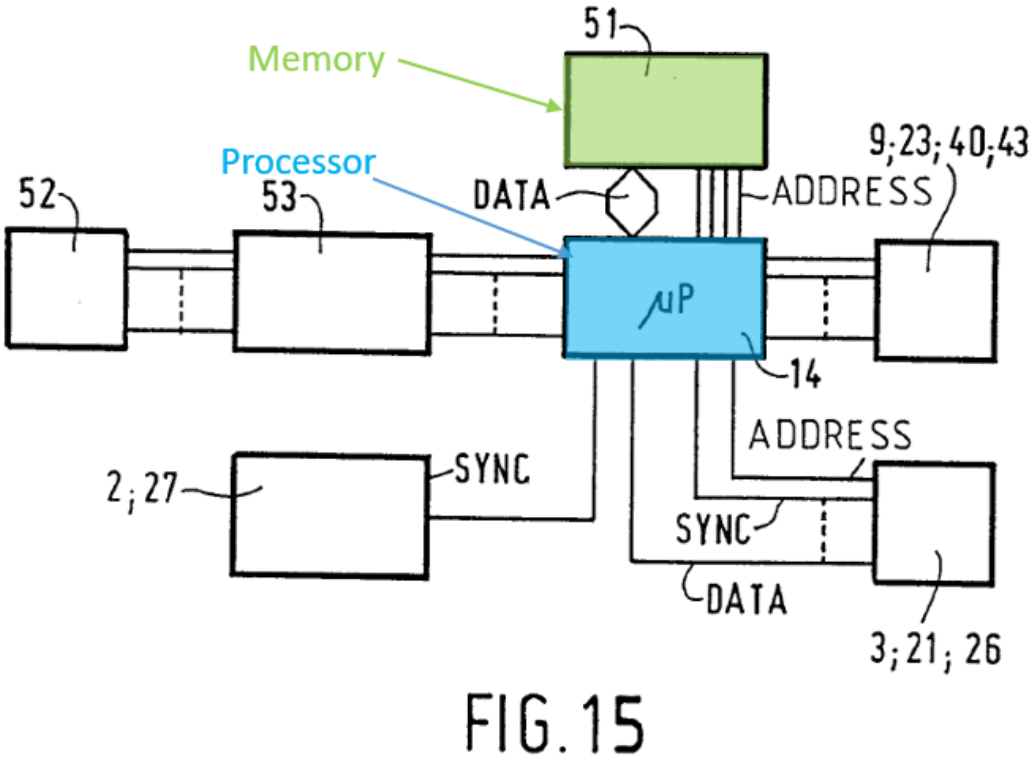

EX1010, FIG. 15 (annotated).

C. Claim 24 instructions

1. [24.8]

Karlsson's "light-sensitive sensor … *detects* the distribution and the intensity of light in the *area ahead of a vehicle*" to "*detect[]* light from *oncoming traffic*." EX1010, 2:2-4, Abstract, 3:19-20, 12:19-24, 5:16-32, 3:27-31, FIGs. 3, 14; EX1003, ¶267. A POSA would have at least found that Karlsson implicitly determines

coordinates of the vehicles when it detects the area corresponding to the oncoming traffic. EX1003, ¶267.

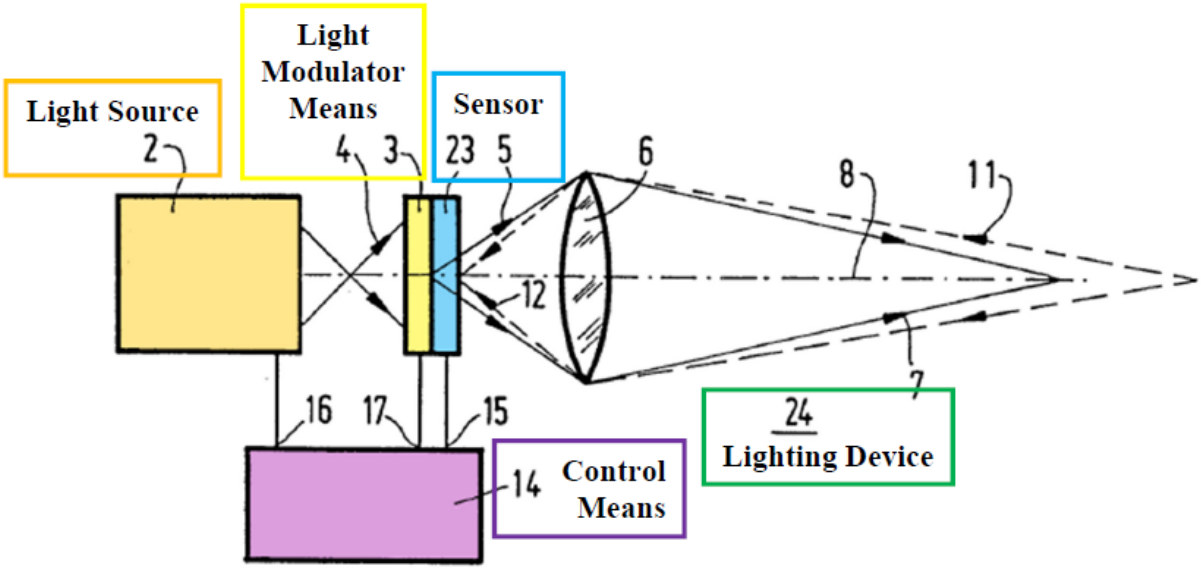

EX1010, FIG. 3 (annotated).

Alternatively, it would have been obvious to modify Karlsson's system to include coordinates associated with the detected image, as taught by Nakamura. Section VIII.A; EX1013, ¶25; EX1003, ¶¶268-270. The modified system would determine which portions of the sensed image correspond to the vehicle, and record those coordinates, as taught by Nakamura. EX1013, ¶¶25, 36-44; EX1003, ¶¶268-270.

2. [24.9]

Karlsson's "light beam 7 … [is] controlled in such a manner that *no light at all* or *light having a low intensity* is emitted in those directions from which light is detected … [thus] *glaring or blinding of oncoming traffic* is effectively *prevented*."

EX1010, 2:7-9, 9:18-26, FIGs. 3, 14, 15. "[L]ight source 2 [] is composed of a grid of separate light sources, such as *LEDs*, which can preferably be controlled either individually or in *groups*." *Id.*, 14:1-4, 14:26-30. Thus, Karlsson discloses selecting a group, or cluster, of LEDs that emits the part of the light beam that creates glare to reduce blinding. EX1003, ¶¶271-272. This group can consist of one or more LEDs. *Id*.

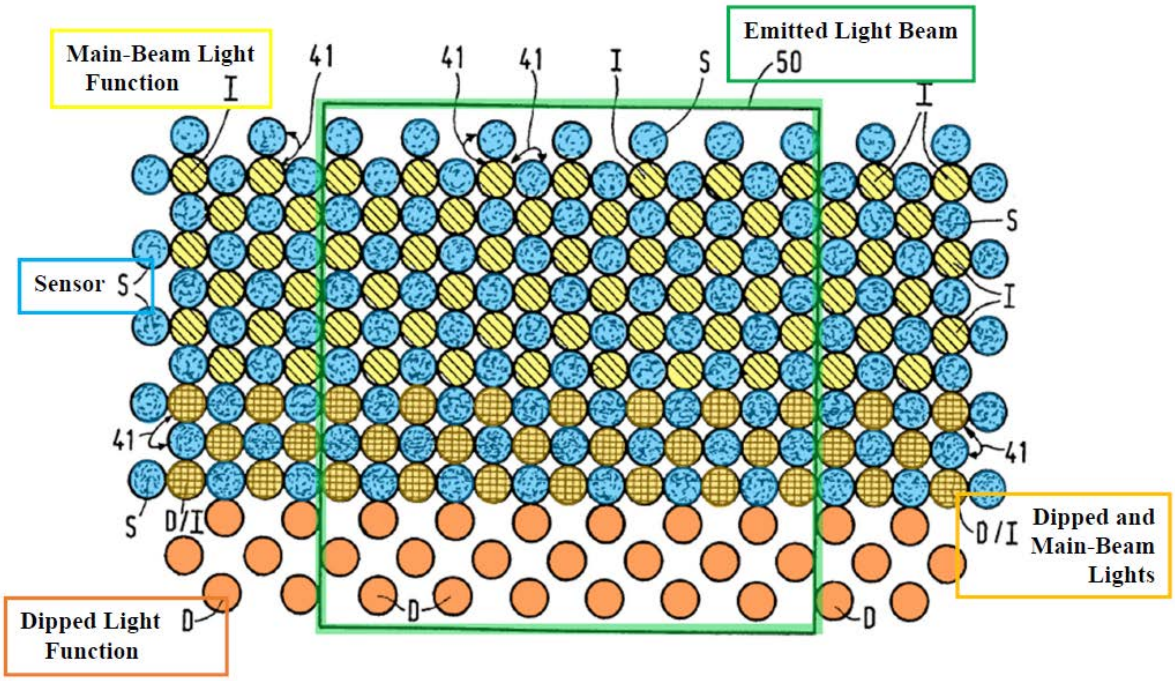

EX1010, FIG. 14 (annotated).

3. [24.10]

Karlsson's "light beam 7 … [is] controlled in such a manner that *no light at all* or *light having a low intensity* is emitted in those directions from which light is detected … [thus] *glaring or blinding of oncoming traffic* is effectively *prevented*." EX1010, 9:18-26, FIGs. 3, 14, 15. The remaining areas of light beam 7 are left at

full intensity ("main-beam" or "high beam" in Karlsson's terms), "permitting a light intensity which is generally *higher than that of conventional dipped headlights*." EX1010, 1:21-24, 2:7-9, Abstract, FIGs. 3, 14, 15; EX1003, ¶¶273-274.

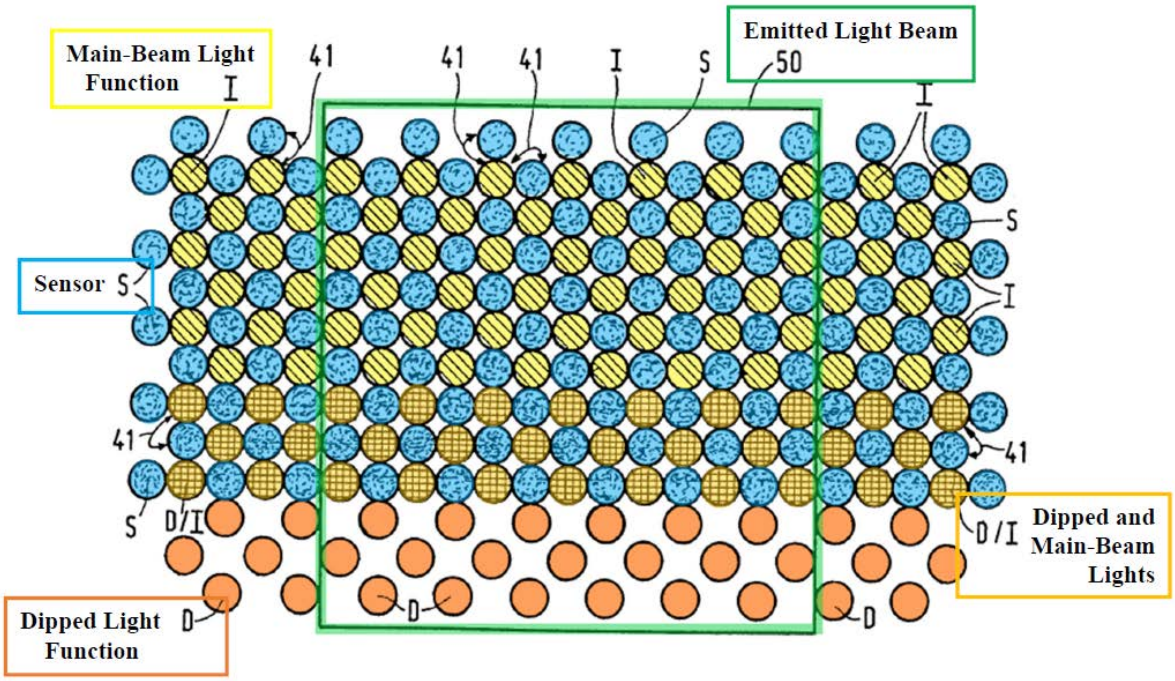

EX1010, FIG. 14 (annotated).

D. Claim 25

Regarding the changed emissions element, Karlsson discloses that "light beam 7 … [is] controlled in such a manner that *no light at all* or *light having a low intensity* is emitted in those directions from which light is detected." EX1010, 9:18-26, FIGs. 3, 14, 15. Thus, Karlsson discloses a change in emission that includes a change in intensity. EX1003, ¶275.

Regarding the non-contiguous element, Karlsson's cluster can be selected "for forming random patterns of the light beam" to "provide a desired lighting

pattern." EX1010, 13:24-29, 14:26-30; EX1003, ¶276. This discloses or renders obvious the non-contiguous element for two reasons. First, non-contiguous patterns fall under the broader category of any random pattern. EX1003, ¶276. Second, a POSA would have understood that one of the desired patterns would be non-contiguous. *Id.* Karlsson's system automatically functions to detect and reduce illumination on any number of targets vehicles because Karlsson references protecting "traffic" from glare. *Id.*; EX1010, 9:18-26. When there are two or more separated vehicle targets, Karlsson's system would select two areas of non-contiguous LEDs to form the dimmed cluster of LEDs to cover all of the vehicle targets. EX1003, ¶276.

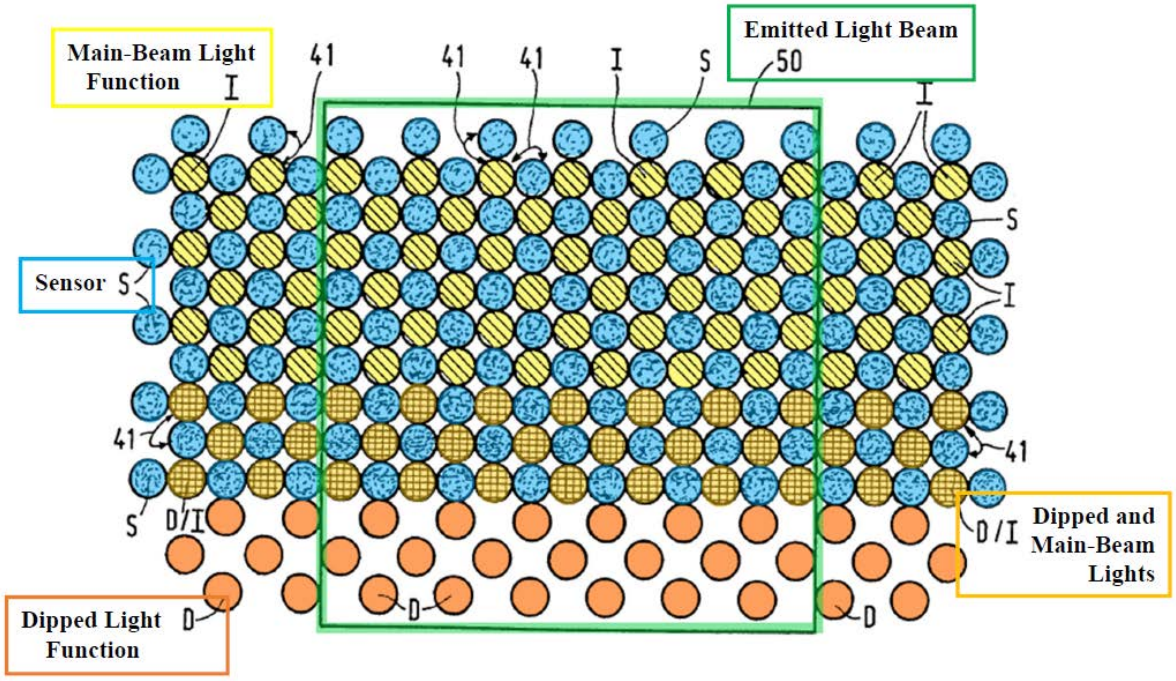

Alternatively, Nakamura discloses that it was known to detect multiple "*vehicles* (preceding vehicles and oncoming vehicles)" and adjust the headlights to

"not expose other *vehicles* to glare." EX1013, ¶¶35, 45. To the extent Patent Owner argues that Karlsson does not disclose detecting and adjusting light based on multiple vehicles, it would have been obvious to modify Karlsson's programming in view of Nakamura because this would improve safety and system performance when multiple other vehicles are present. EX1003, ¶¶277-278.

E. Claims 30/38/46/54

Light from Karlsson's LEDs passes through a "lens 6," which is an optical control element. EX1010, 11:10-11, FIG. 3; EX1003, ¶¶279-280.

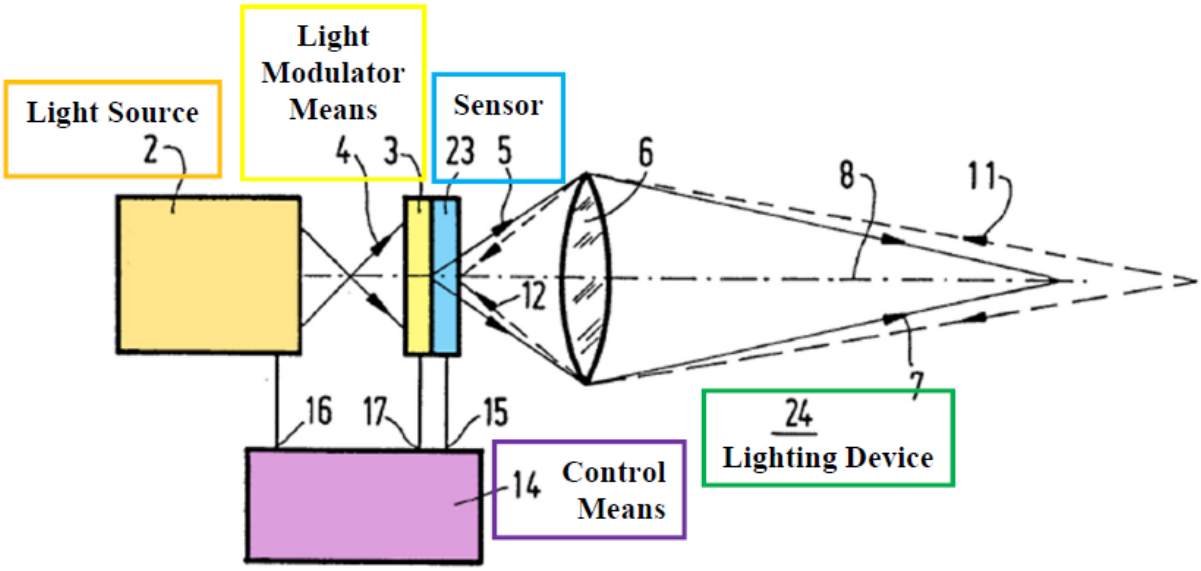

EX1010, FIG. 3 (annotated).

F. Claims 31/39/47/55

Light from Karlsson's LEDs passes through a "lens 6". EX1010, 11:10-11, FIG. 3; EX1003, ¶¶281-282.

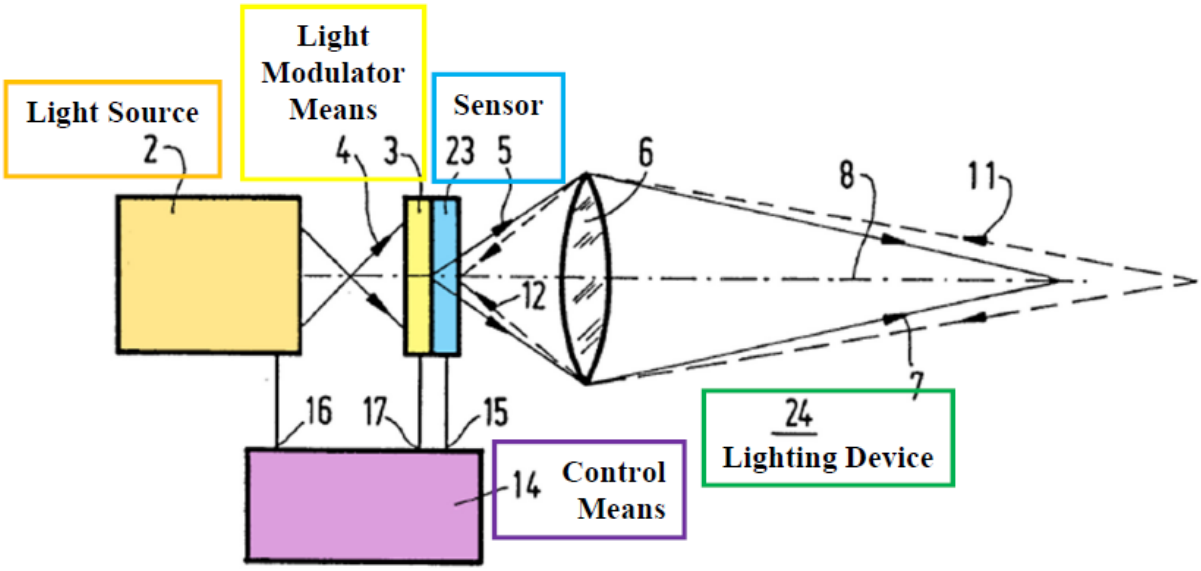

EX1010, FIG. 3 (annotated).

G. Claim 32 instructions

1. [32.8a]

Karlsson's "light beam 7 … [is] controlled in such a manner that *no light at all* or *light having a low intensity* is emitted in those directions from which light is detected." EX1010, 9:18-26, FIGs. 3, 14, 15. This low/no intensity light in the selected group is the claimed "change[] to one or more characteristics of first light" of the selected cluster. EX1003, ¶282. The remaining areas of light beam 7 are left at full intensity ("main-beam" or "high beam" in Karlsson's terms), "permitting a light intensity which is generally *higher than that of conventional dipped headlights*." EX1010, 1:21-24, 2:7-9, Abstract, FIGs. 3, 14, 15; EX1003, ¶283. The light beam is created by individual LEDs. EX1010, 11:29-32, 13:24-29; EX1003, ¶¶283-284.

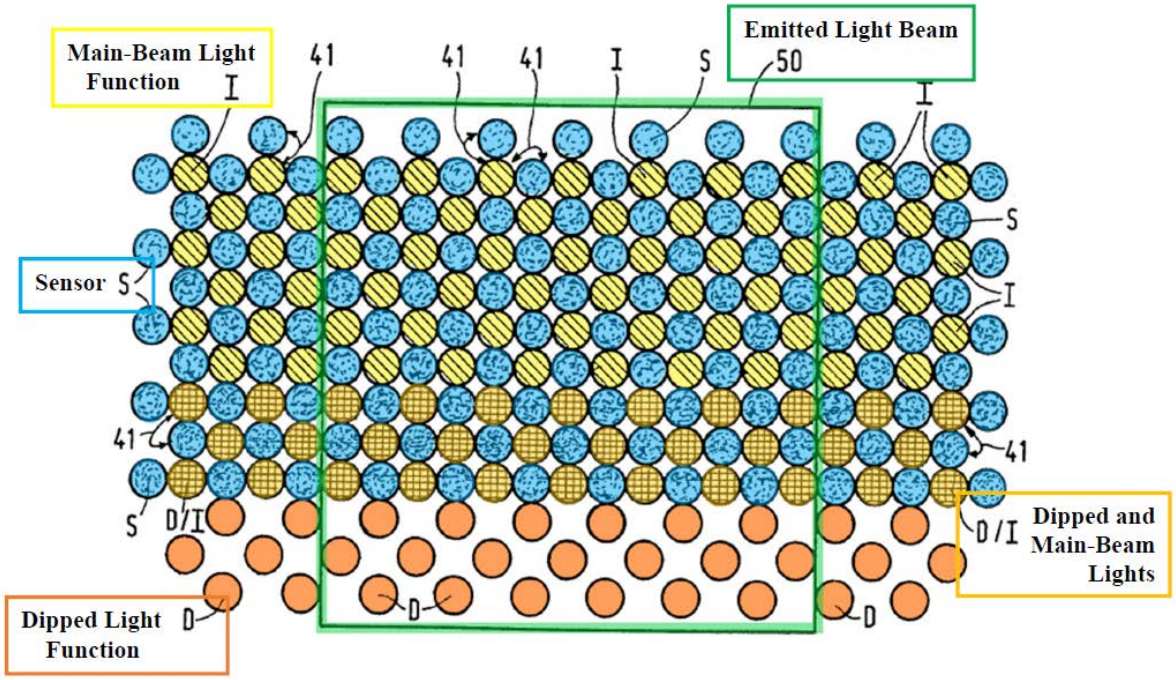

EX1010, FIG. 14 (annotated).

2. [32.8b]

Karlsson's light is "controlled in such a manner that *no light at all* or *light having a low intensity* is emitted … directions from which light is detected." EX1010, 9:18-26, FIGs. 3, 14, 15. Karlsson's remaining areas ("main beam" or "high beam") are left at full intensity, "permitting … intensity … generally *higher than that of conventional dipped headlights*." EX1010, 1:21-24, 2:7-9, Abstract, FIGs. 3, 14. Main beam lights I extend above the dimmed lights D/I. *Id.*, FIG. 14; EX1003, ¶285. A POSA would also have understood that positioning the main beam (full intensity) LEDs all around the reduced illumination area provides the "optimum lighting effect" for the driver because doing so maximizes the area that is fully illuminated. EX1003, ¶284; EX1010, 2:7-9. In the alternative, it would have

been obvious to a POSA to configure Karlsson's system to surround the reduced illumination area with full illumination to the greatest extent possible for the same reason, which would result in the claimed light distribution. EX1003, ¶¶285-286.

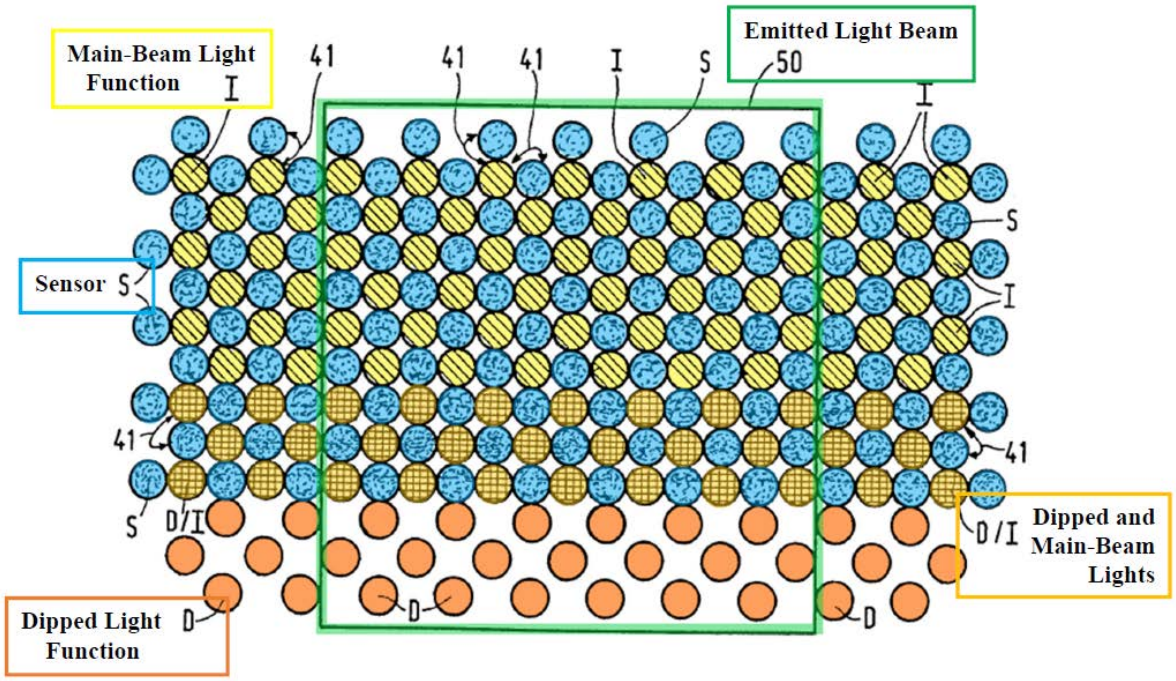

EX1010, FIG. 14 (annotated).

3. [32.9]

Karlsson discloses "repeatedly controlling the intensity of the light emitted" to minimize glare. EX1010, 2:30-3:6. Thus, Karlsson's system performs the detection/illumination steps discussed above repeatedly, updating as necessary for any changes in the position of the detected vehicle. EX1003, ¶¶286-287.

H. Claim 33

Karlsson's LEDs are "controlled in such a manner that no light at all or light having a low intensity is emitted in those *directions* from which light is detected."

EX1010, 9:18-22. This teaches the claimed "known aimings of the first light" because the known aiming is the direction of the dimmed area that corresponds to the target vehicle. EX1003, ¶289. Thus, Karlsson selects a cluster of LEDs that correspond to the direction (the claimed "known aimings") of the target vehicle. *Id.*, ¶289.

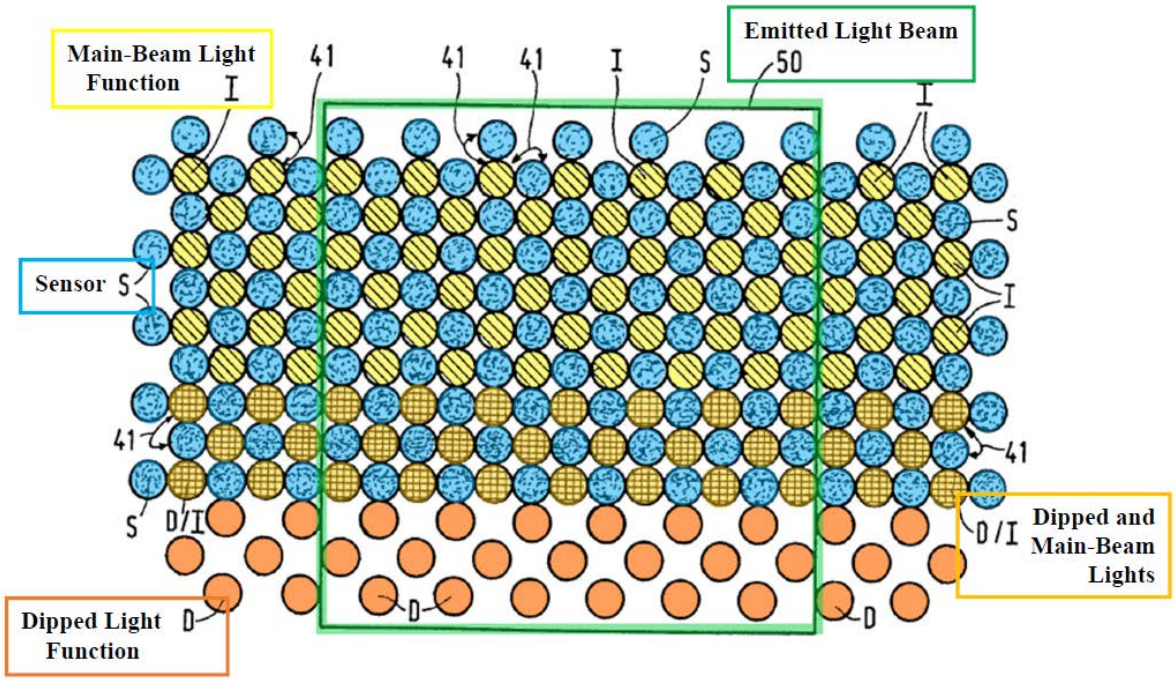

EX1010, FIG. 14 (annotated).

The remaining elements of claim 33 are patentably indistinct from the elements of claim 25, and are disclosed or rendered obvious by Karlsson for the same reasons. Section VIII.D; EX1003, ¶¶289-294.

I. Claim 40 instructions

1. [40.8a]

[40.8a] is patentably indistinct from [24.8] and [24.9], and is disclosed by Karlsson for the same reasons. Sections VIII.C.1-2; EX1003, ¶294. The coordinates in [24.8] used to determine the cluster in [24.9] are based on the coordinate-specific information detected by the camera in [24.5], which is "data from one or more of the sensors," as claimed here. Sections VIII.C.1-2, VIII.B.6; EX1003, ¶¶295-298.

2. [40.8b]

[40.8b] is patentably indistinct from portions of [24.10], and is disclosed by Karlsson for the same reasons. Sections VIII.C.3; EX1003, ¶¶299-301.

3. [40.8c]

A POSA would have understood, or found obvious, that Karlsson accommodates multiple vehicles. Section VIII.D. Thus, a second vehicle would result in the claimed "second, different cluster of [] LEDs" as Karlsson would repeat its dimming process for all detected vehicles. EX1003, ¶¶302-304; *see* Sections VIII.I.1-2.

4. [40.8d]

This element is patentably indistinct from [24.10], in view of the discussion of [40.8c] above, and is disclosed or rendered obvious by Karlsson for the same reasons. Sections VIII.C.3, VIII.I.3; EX1003, ¶¶305-307.

5. [40.8e]

The first cluster and second cluster (and their corresponding first and second emissions) have reduced intensity with respect to the full intensity portion of the beams (i.e., the claimed "third emission") that illuminates the other areas, including the areas between the first and second dimmed portions. Sections VIII.I.1-3; EX1010, 1:21-24, 2:7-9, 9:18-22; EX1003, ¶¶308-309.

J. Claim 41

Claim 41 is patentably indistinct from claims 25 and 33, and is disclosed or rendered obvious by Karlsson for the same reasons. Sections VIII.D, VIII.H; EX1003, ¶309. The addition of a second LED cluster and second direction corresponding to a second vehicle (the second claimed "known aimings") is a simple repetition of claim 33, which is taught or rendered obvious by Karlsson and Nakamura. EX1013, ¶¶35, 45; EX1003, ¶¶310-317.

K. Claim 48 instructions

1. [48.8a]

[48.8a] is patentably indistinct from elements [24.8] and [24.9], and claim 33, and is disclosed or rendered obvious by Karlsson for the same reasons. Sections VIII.C.1-2; VIII.H; EX1003, ¶316. The coordinates in [24.8] used to determine the cluster in [24.9] are based on the coordinate-specific information detected by the camera in [24.5], which is "data" as claimed here. Sections VIII.C.1-2, VIII.B.6;

EX1003, ¶316. A POSA would have understood that the vehicle recited in [24.8], [24.9], and 33 is "an object." EX1003, ¶¶318-321.

2. [48.8b]

[48.8b] is similar to elements [32.8a] and [32.8b], using the terms first cluster/first light and second cluster/second light versus the diminished illumination area formed in the broader illumination area. EX1003, ¶322. These two illuminations in [32.8a]/[32.8b] are formed from first and second clusters with different light levels, as discussed above. *Id.*; Sections VIII.G.1-2. The only difference is that the first and second illuminations must be at a common elevation. EX1003, ¶322. This requirement would have at least been obvious due to, if not disclosed by, Karlsson because of the need to maximize the area of the full intensity beam. *Id.*, ¶¶322-325; Sections VIII.G.1-2.

L. Claim 49

Most of claim 49's elements are patentably indistinct from the elements of elements/claims 25, 30, and 33, and are taught or rendered obvious by Karlsson and Nakamura for the same reasons. Sections VIII.D, VIII.E, VIII.H; EX1003, ¶326. Claim 49 further specifies that the light control "includes a change of at least one LED of the cluster to a non-emitting state." Karlsson discloses that its beam can be set to have "*no light at all*." EX1010, 9:18-26. Claim 49 also requires illumination below a "predefined glare level." Karlsson discloses that the selected LEDS are "controlled in such a manner that no light at all or light having a low intensity is

emitted in those directions from which light is detected …. In this manner glaring or blinding of oncoming traffic is effectively prevented." *Id.*, 9:18-26. This low/no-light intensity level prevents glaring and blinding, and thus a POSA would have understood that the low/non-emitting intensity is below a "predefined glare level" as claimed. EX1003, ¶¶326-333.

IX. GROUND 4: KARLSSON, NAKAMURA, AND GOTOU RENDER OBVIOUS CLAIMS 26–29, 34–37, 42–45, AND 50–53.

A. A POSA would have been motivated to combine Karlsson, Nakamura, and Gotou with a reasonable expectation of success.

As discussed above, a POSA would have motivated to combine Karlsson and Nakamura to incorporate Nakamura's coordinate and detection algorithm teachings in Karlsson's system. Section VIII.A; EX1003, ¶334. Gotou is from the same technical field as both Karlsson and Nakamura—adaptive vehicle headlight systems. EX1012, 1:7-9, 1:52-59, Abstract, FIGs. 1-2; EX1003, ¶¶334-335. A POSA would have been further motivated to modify Karlsson's system to adjust light based on map data, as in Gotou, to further control Karlsson's directional LEDs to illuminate roadway curves, thereby improving driver safety—an express purpose of Karlsson. EX1003, ¶332; *see, e.g.*, EX1010, 1:16-26, 4:17-21, 9:18-26.

Karlsson's "direction sensor 54" detects the angle of the steering wheel "for determining when the car 56 is taking a bend, so that the light beam 7 can be adapted." EX1010, 20:22-32. Karlsson does not disclose using map data, such as from GPS or navigation beacons, as an input to control the LEDs, but it would have

been obvious to a POSA to do so. EX1003, ¶336. Adding Gotou's map data would improve the performance of the existing system that relies only on the wheel direction because it allows the system to predict turns farther in advance. *Id.*, ¶337. This would have improved the safety and performance of Karlsson's system. *Id.*

Gotou's *techniques and system components*, like Karlsson's, seek to enhance driver safety by using map-data-based control. EX1012, 1:14-20, 2:19-26, 6:40-44; EX1003, ¶338. Gotou explains that controlling the shape of the light to correspond with the driver's changing line of sight (ahead of a curve) enhances safety. EX1012, 6:40-44.

A POSA would have understood that including an additional data source for Karlsson's control means 14—Gotou's map data—would have merely been applying Gotou's known technique (using map data from Gotou's navigation system to shape and reshape light and/or adjust intensity) to Karlsson's similar, known device (dynamic headlight system based on light-sensing inputs that directs light to needed areas and away from undesired areas), in the same way. EX1003, ¶338. Gotou's known technique is fully described along with its benefits (e.g., improved safety); thus, a POSA would have readily applied it to similar systems, such as Karlsson's, in the same way. EX1003, ¶338.

Additionally, or alternatively, this modification would have been simply combining known prior-art elements (e.g., Karlsson's adaptive, direction-

controllable LED headlamps and Gotou's directional control based on map data from navigation system 30). *Id.*, ¶339; *KSR*, 550 U.S. at 401.

A POSA would have had a reasonable expectation of success modifying Karlsson-Nakamura in view of Gotou. EX1003, ¶340. A POSA would have understood *how* to combine the teachings of Karlsson and Gotou, for example, by simply modifying software instructions stored in the memory of Karlsson's controller/processor (e.g., ECU) to adjust and direct light from the LEDs appropriately in view of Gotou's map data. *Id*. It also would have been straightforward to combine Gotou's navigation system 30 (e.g., including GPS receiver 34) with Karlsson's system. *Id.* Such modifications would have been routine and well within a POSA's skill due to the similarities in Karlsson's and Gotou's adaptive light control systems and methods. *Id*. In applying Gotou's technique to Karlsson, a POSA would have simply been applying a known technique in a predictable way—controlling headlights based in part on map data—in the same way already disclosed in the art. *Id.*

B. Claims 26/34/42/50

A POSA would have been motivated to combine Karlsson in view of Gotou in order to add map-based curve anticipation to improve Karlsson's performance. Section IX.A; EX1003, ¶341. Gotou's system works when "a *curved part* or the like is *foreseen in advance in reference to both map information of the navigation system*

and information of the proper or subject vehicle position on the map, and the lighting region is changed *before* entering the *curved part*." EX1012, Abstract, 1:6-47, 1:51-59, 3:24-4:49, 8:9-41; EX1003, ¶341.

Karlsson's modified system would incorporate map data from Gotou's navigation system 30 into control means 14, and control the LEDs accordingly. EX1003, ¶¶342-343; Section IX.A.

C. Claims 27/35/43/51

The first elements of this claim are patentably indistinct from claim 25, and disclosed or rendered obvious by Karlsson for the same reasons. Section VIII.D; EX1003, ¶344. The final element of this claim is similar to claim 26, but requires that the road curvature tracking be accomplished by "changing illumination in at least a direction of the road curvature by adaptation of the light pattern in at least one of color, intensity or spatial distribution by … LEDs." In modified Karlsson, a POSA would have been motivated to adapt the LED light pattern to illuminate the road curve by altering, for example, the intensity or distribution of the LEDs so that the curved roadway is properly lit. EX1003, ¶344.

Additional elements of claims 35, 43, and 51 are patentably indistinct from claim 33 (for claims 35 and 43) and claim 49 (for claim 51), and are taught by Beam for the same reasons. *Id.*, ¶¶344-346; Sections VIII.H; VIII.L.

D. Claims 28/36/44/52

Gotou's discloses using map data, which is created in Gotou's "navigation system 30" using "a GPS receiver 34." EX1012, 3:24-4:49, 8:9-41; EX1003, ¶¶347-349.

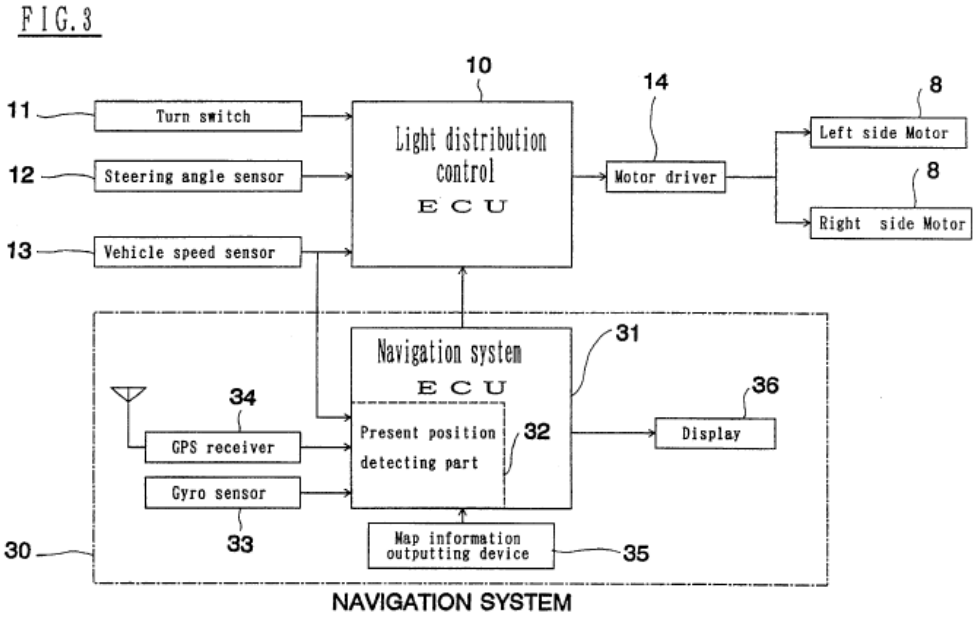

EX1012, FIG. 3.

Modified Karlsson would include map data as part of its inputs to predict the upcoming road curvatures. EX1003, ¶348; Section IX.A.

E. Claim 29/37/45/53

Gotou discloses several sensors that are used as part of the road-curvature-prediction process. For example, a "GPS receiver 34," a "gyro-sensor 33," and a "vehicle speed sensor 13" are all used as input into the road-prediction process. EX1012, 4:1-11; EX1003, ¶350. These sensors are used to ultimately determine "an accurate position of the proper vehicle" that is used to output map information.

EX1012, 4:1-14; EX1003 ¶350. Gotou also discloses using "map information … from the navigation system" to predict curvature and modify lighting. EX1012, 3:52-62. Thus, modified Karlsson would include various sensors and map data as part of its inputs to predict the upcoming road curvatures. EX1003, ¶¶351-352; Section IX.A.

X. SECONDARY CONSIDERATIONS DO NOT SUPPORT NONOBVIOUSNESS.

Patent Owner submitted alleged secondary considerations evidence during reexamination. EX1002, 0066-83. The Central Reexamination Unit did not address this evidence. EX1002, 0930-43. Patent Owner alleged industry praise, *id.*, 0067-77, and long felt need, *id.*, 0077-83, along with a supporting declaration, *id.*, 0509-63. However, no nexus is present, and, even assuming there is a nexus, the evidence does not overcome this Petition's strong showing of obviousness. EX1003, ¶¶353-356

Patent Owner does not argue that they produce a product coextensive with the claims, and Petitioner is not aware of any such product. Thus, there is no presumption of nexus based on a coextensive product. *Fox Factory, Inc. v. Sram, LLC*, 944 F.3d 1366, 1373-74 (Fed. Cir. 2019). Absent a presumption of nexus, Patent Owner can still prove nexus "by showing that the evidence of secondary considerations is the direct result of the unique characteristics of the claimed invention." *Id.* (quotations

omitted). But there is no evidence tying the secondary considerations to the claims, much less evidence showing that there is a direct link here.

Here, Patent Owner's evidence consists of articles on automatic headlight technology from various industry organizations like the American Automobile Association ("AAA"), Autoweek, and Driving Vision News, as well as a 2014 PACE award given to HELLA for its automatic headlights. EX1002, 0066-77. The articles are general discussions of advances in headlamp technology that do not discuss the '551 patent, or any related patent. For example, there is no suggestion that HELLA's headlamp had any link to the claims beyond being in the same general field. EX1002, 0071-72. Patent Owner attempts to conflate general technology reports, surveys, and *unrelated* products with its claims. This is not sufficient to create a nexus, and the Board should not consider this evidence for this reason alone.

The Federal Circuit has held "weak secondary considerations generally do not overcome a strong prima facie case of obviousness." *W. Union Co. v. MoneyGram Payment Sys., Inc.*, 626 F.3d 1361, 1373 (Fed. Cir. 2010). The evidence here is weak because there is no related product to support a nexus finding, and the claims include no novel features that would solve any long-felt need in the industry. EX1003, ¶¶349-352. Thus, the Board should also give no weight to this alleged secondary considerations evidence.

XI. DISCRETIONARY CONSIDERATIONS UNDER SECTIONS 314(A) AND 325(D) STRONGLY FAVOR INSTITUTION.

A. The *Fintiv* factors strongly favor institution.

The *Fintiv* factors strongly favor institution. *Apple Inc. v. Fintiv, Inc.*, IPR2020-00019, Paper 11 (P.T.A.B. Mar. 20, 2020) (precedential); *see also* June 21, 2022 Memorandum: Interim Procedure for Discretionary Denials in AIA Post Grant Proceedings with Parallel District Court Litigation ("June 2022 Memo"). The present '551 patent reexam claims are not asserted in any co-pending litigation against Petitioner, and thus *Fintiv* factors 1-5 strongly favor institution. However, to the extent that Patent Owner amends the pending litigation between Petitioner and Patent Owner to add these claims, the *Finitiv* factors would still strongly favor institution.

Factor 1 is neutral or favors institution. No motion for stay has been filed and the court has not indicated whether it would grant any such motion. Because the Board typically "will not attempt to predict how the district court in the related district court litigation will proceed," *Sand Revolution II, LLC v. Continental Intermodal Group – Trucking LLC*, IPR2019-01393, Paper 24 at 7 (P.T.A.B. June 16, 2020) (informative), factor 1 carries little weight here.

Factor 2 strongly favors institution. The co-pending litigation in the DDE is in its early stages, no trial date has been set, and the median time to trial for civil actions in DDE is three years (36 months). EX1051, District Court Statistics, 0014;

see June 2022 Memo, 3. Thus, trial would likely occur (if at all) in mid-2025 —over a year after the projected final decision here. *See Mylan Pharm. Inc. v. Bayer Pharma Aktiengesellschaft*, IPR2022-00517, Paper 15 at 8-9 (P.T.A.B. Aug. 9, 2022) (evaluating median time to trial for factor 2).

Factor 3 strongly favors institution. By institution, neither the parties nor the DDE court will have invested significant resources in the litigation. The court has not issued a scheduling order, or any substantive rulings (e.g., claim construction, dispositive motion). Petitioner's diligence filing this Petition roughly 6 months after the complaint, less than 4 months from the publication of the reexamination certificate, and long before Patent Owner's infringement contentions, confirm that factor 3 strongly favors institution.

Factors 4 and 5 strongly favor institution. Petitioner stipulates that if the Board institutes this Petition, Petitioner will not raise at trial in parallel litigation any Ground raised here. Petitioner's stipulation mitigates concerns for duplicating efforts and inconsistent conclusions.

Factor 6 strongly favors institution. The Petition's merits are strong. *See* June 2022 Memo, 3-5. Additionally, under factor 6: (1) the Board is best suited to address the technical issues raised here; (2) a decision on the merits at institution may aid the parties in resolving their dispute; and (3) determining patentability will benefit the public, providing a complete record and rationale absent from a jury verdict

form. Patent Owner has already sued at least eight defendants and could potentially sue others in view of the accused technology.

Holistically, the *Fintiv* factors strongly favor institution.

B. *General Plastic* and *Valve Corp.* strongly favor institution.

Serial petitioning concerns addressed in *General Plastic Indus. Co., Ltd. v. Canon Kabushiki Kaisha*, IPR2016-01357, Paper 19 at Section II.B.4.i (P.T.A.B. Sept. 6, 2017) (precedential), and *Valve Corp. v. Electronic Scripting Products, Inc.*, IPR2019-00062, Paper 11 (P.T.A.B. Apr. 2, 2019) (precedential), are not at play here. Petitioner has not previously requested IPR of the ’551 patent.

C. *Advanced Bionics* strongly favors institution.

The two-part framework from *Advanced Bionics*, IPR2019-01469, Paper 6 at 8-9 (precedential), demonstrates that denial under § 325(d) is not appropriate. Under Part 1, the same or substantially the same art or arguments were not previously presented to the Office, ending the inquiry in favor of institution. No references forming a Ground were applied or cited during the ’551 patent’s original and reexamination prosecution.

XII. MANDATORY NOTICES (37 C.F.R. § 42.8(A)(1)

REAL PARTY IN INTEREST: The real party-in-interest is Petitioner Volkswagen Group of America, Inc., which is a subsidiary of Volkswagen AG.

RELATED MATTERS: The '551 patent is the subject of reexamination certificate 12119 (issued from reexam control number 90/014,815). The '551 patent is also the subject of reexam control number 16/858,342.

The '551 patent claims the benefit of U.S. Patent No. 8,100,552.

LEAD AND BACKUP COUNSEL: Under 37 C.F.R. §§ 42.8(b)(3) and 42.10(a), Petitioner appoints **Michael D. Specht** (Reg. No. 54,463) as lead counsel, **Jason A. Fitzsimmons** (Reg. No. 65,367) as first back-up counsel, and **Daniel E. Yonan** (Reg. No. 53,812), **Ian Soule** (Reg. No. 74,290), and **Trevor M. O'Neill**, (Reg. No. 72,981) as additional back-up counsel, all at the address: STERNE, KESSLER, GOLDSTEIN & FOX P.L.L.C., 1100 New York Avenue, N.W., Washington, D.C., 20005, phone (202) 371-2600, and facsimile (202) 371-2540.

SERVICE INFORMATION: Petitioner consents to electronic service by email at: **mspecht-PTAB@sternekessler.com**, **jfitzsimmons-PTAB@sternekessler.com**, **dyonan-PTAB@sternekessler.com**, **isoule-PTAB@sternekessler.com, toneill-PTAB@sternekessler.com**, and **PTAB@sternekessler.com**.

XIII. CONCLUSION

For the reasons above, Petitioner requests *inter partes* review of claims 24–55 of U.S. Patent No. 9,955,551.

Respectfully submitted,

STERNE, KESSLER, GOLDSTEIN & FOX P.L.L.C.

/Michael D. Specht/

Michael D. Specht (Reg. No. 54,463)
Attorney for Petitioner
Volkswagen Group of America, Inc.

Date: December 9, 2022

1100 New York Avenue, N.W.
Washington, D.C. 20005-3934
(202) 371-2600

CERTIFICATE OF COMPLIANCE WITH TYPE-VOLUME LIMITATION, TYPEFACE REQUIREMENTS, AND TYPE STYLE REQUIREMENTS

1. This Petition complies with the type-volume limitation of 14,000 words, comprising 13,435 words, excluding the parts exempted by 37 C.F.R. § 42.24(a).

2. This Petition complies with the general format requirements of 37 C.F.R. § 42.6(a) and has been prepared using Microsoft® Word 2010 in 14 point Times New Roman.

Respectfully submitted,

STERNE, KESSLER, GOLDSTEIN & FOX P.L.L.C.

/Michael D. Specht/

Michael D. Specht (Reg. No. 54,463)
Attorney for Petitioner
Volkswagen Group of America, Inc.

Date: December 9, 2022

1100 New York Avenue, N.W.
Washington, D.C. 20005-3934
(202) 371-2600

CERTIFICATION OF SERVICE (37 C.F.R. §§ 42.6(e), 42.105(a))

The undersigned hereby certifies that on December 9, 2022, true and correct copies of the foregoing **PETITION FOR *INTER PARTES* REVIEW OF U.S. PATENT NO. 9,955,551** and all associated exhibits were served in their entireties on the following parties via FedEx®:

BROOKS KUSHMAN
1000 Town Center
22nd Floor
Southfield, MI 48075
PAIR Correspondence Address for U.S.P.N. 9,955,551

Respectfully Submitted,

STERNE, KESSLER, GOLDSTEIN & FOX P.L.L.C.

/Michael D. Specht/

Michael D. Specht (Reg. No. 54,463)
Attorney for Petitioner
Volkswagen Group of America, Inc.

Date: December 9, 2022

1100 New York Avenue, N.W.
Washington, D.C. 20005-3934
(202) 371-2600

Appendix A: Claim Comparison Tables

Independent Claim Structural Elements			
Claim 24	Claim 32	Claim 40	Claim 48
[24.p] An illuminating device having automatic control of light provided to an illuminated area comprising:	[32.p] An illuminating device having automatic control of light provided to an illuminated area comprising:	[40.p] An illuminating device having automatic control of light provided to an illuminated area comprising:	[48.p] An illuminating device having automatic control of light provided to an illuminated area comprising:
[24.1] a structure for incorporating illuminating device elements, wherein the structure comprises a motor vehicle;	[32.1] a structure for incorporating illuminating device elements, wherein the structure comprises a motor vehicle;	[40.1] a structure for incorporating illuminating device elements, wherein the structure comprises a motor vehicle;	[48.1] a structure for incorporating illuminating device elements, wherein the structure comprises a motor vehicle;
[24.2]a plurality of individually controllable LEDs incorporated in the structure via at least one headlamp mounted to the structure, each headlamp including at least one of the LEDs, the LEDs in communication with a power source;	[32.2] a plurality of individually controllable LEDs incorporated in the structure via at least one headlamp mounted to the structure, each headlamp including at least one of the LEDs, the LEDs in communication with a power source;	[40.2] a plurality of individually controllable LEDs incorporated in the structure via at least one headlamp mounted to the structure, each headlamp including at least one of the LEDs, the LEDs in communication with a power source;	[48.2] a plurality of individually controllable LEDs incorporated in the structure via at least one headlamp mounted to the structure, each headlamp including at least one of the LEDs, the LEDs in communication with a power source;
[24.3]electronic circuitry apparatus for the controlled powering of the LEDs and other of the illuminating device elements;	[32.3] electronic circuitry apparatus for the controlled powering of the LEDs and other of the illuminating device elements;	[40.3] electronic circuitry apparatus for the controlled powering of the LEDs and other of the illuminating device elements;	[48.3] electronic circuitry apparatus for the controlled powering of the LEDs and other of the illuminating device elements;
[24.4]one or more processors;	[32.4] one or more processors;	[40.4] one or more processors;	[48.4] one or more processors;

[24.5]one or more sensors, including one or more cameras, placed on the structure for detecting coordinate-specific information about the illuminated area, at least one of said cameras in communication with power, and in communication with at least one of the one or more processors	[32.5] one or more sensors, including one or more cameras, placed on the structure for detecting coordinate-specific information about the illuminated area, at least one of said cameras in communication with power, and in communication with at least one of the one or more processors	[40.5] one or more sensors, including one or more cameras, placed on the structure for detecting coordinate-specific information about the illuminated area and positioned to capture an image of at least two other vehicles, at least one of said cameras in communication with power, and in communication with at least one of the one or more processors;	[48.5] one or more sensors, including one or more cameras, placed on the structure for detecting coordinate-specific information about the illuminated area, at least one of said cameras in communication with power, and in communication with at least one of the one or more processors
[24.6]a controller, including at least one of the one or more processors, integrated with the structure via mounting, in communication with the controlling power electronic circuitry apparatus, said controller arranged to process the information communicated from the cameras and to automatically control the light provided to the illuminated area; and	[32.6] a controller, including at least one of the one or more processors, integrated with the structure via mounting, in communication with the controlling power electronic circuitry apparatus, said controller arranged to process the information communicated from the cameras and to automatically control the light provided to the illuminated area; and	[40.6] a controller, including at least one of the one or more processors, integrated with the structure via mounting, in communication with the controlling power electronic circuitry apparatus, said controller arranged to process the information communicated from the cameras and to automatically control the light provided to the illuminated area; and	[48.6] a controller, including at least one of the one or more processors, integrated with the structure via mounting, in communication with the controlling power electronic circuitry apparatus, said controller arranged to process the information communicated from the cameras and to automatically control the light provided to the illuminated area; and
[24.7]memory storing instructions that, when executed by one or more processors of the	[32.7] memory storing instructions that, when executed by one or more	[40.7] memory storing instructions that, when executed by one or more	[48.7] memory storing instructions that, when executed by one or more

controller, enable the controller to:	processors of the controller, enable the controller to:	processors of the controller, enable the controller to:	processors of the controller, enable the controller to:
Claims 26/34/42/50			
26. The illuminating device of claim 24, wherein the memory further stores instructions that when executed by one or more processors of the controller, enable the controller to: identify an upcoming road curvature along a road on which the motor vehicle is traveling; and accommodate the upcoming road curvature by adaptation of a light pattern of at least one of the at least one headlamps.	34. The illuminating device of claim 32, wherein the memory further stores instructions that, when executed by one or more processors of the controller, enable the controller to: identity an upcoming road curvature along a road on which the motor vehicle is traveling; and accommodate the upcoming road curvature by adaptation of a light pattern of at least one of the at least one headlamps.	42. The illuminating device of claim 40, wherein the memory further stores instructions that, when executed by one or more processors of the controller, enable the controller to: identify an upcoming road curvature along a road on which the motor vehicle is traveling; and accommodate the upcoming road curvature by adaptation of a light pattern of at least one of the at least one headlamps.	50. The illuminating device of claim 48, wherein the memory further stores instructions that, when executed by one or more processors of the controller, enable the controller to: identify an upcoming road curvature along a road on which the motor vehicle is traveling; and accommodate the upcoming road curvature by adaptation of a light pattern of at least one of the headlamps.
Claim 35			
35. The illuminating device of claim 14, wherein: the one or more changes to characteristics of the first light include a change to at least one of intensity or color or a change of at least one LED of the cluster to a non-emitting state; the cluster includes a plurality of the LEDs and the cluster includes non-contiguous LEDs; the memory further stores instructions that, when executed by one or more processors of		27. The illuminating device of claim 26, wherein: the changed emission includes a change to at least one of intensity or color or a change of at least one LED of the cluster to a non-emitting state; the cluster includes a plurality of the LEDS and the cluster includes non-contiguous LEDs; and the memory further stores instructions that, when executed one or more processors of the controller, enable the controller to	

the controller, enable the controller to select the cluster of LEDs based at least in part on known aimings of the first light associated with the first cluster having a correlation to the at least the portion, the known aimings based at least in part on at least one of known directionality of light emitted the first cluster or known directionality of light emitted by the first cluster exiting the headlamp; and the memory further stores instructions that, when executed by one or more processors of the controller, enable the controller to accommodate the road curvature by changing illumination in at least a direction of the road curvature by adaptation of the light pattern in at least one of color, intensity or spatial distribution by modification of light associated with one or more of the LEDs.	accommodate the road curvature by changing illumination in at least a direction of the road curvature by adaptation of the light pattern in at least one of color, intensity or spatial distribution by modification of light associated with one or more of the LEDs. 33. The illuminating device of claim 32 wherein: the memory further stores instructions that, when executed by one or more processors of the controller, enable the controller to select the cluster of LEDs based at least in part on known aimings of the first light associated with the first cluster having a correlation to the at least the portion, the known aimings based at least in part on at least one of known directionality of light emitted by the first cluster or known directionality of light emitted by the first cluster exiting the headlamp; the data includes image data; the one or more changes to characteristics of the first light include a change to at least one of intensity or color or a change of at least one LED of the cluster to a non-emitting state; and the cluster includes a plurality of the LEDs and the cluster includes non-contiguous LEDS.
Claim 43	
43. The illuminating device of claim 42, wherein: at least one of the first or second change to characteristics of the associate with at least one of the first or second cluster of LEDs includes at least one of a change to color, to intensity, or a change of at one LED of the respective cluster to a non-emitting state; at least one of the cluster or the second cluster includes a plurality of the LEDs and at least	27. The illuminating device of claim 26, wherein: the changed emission includes a change to at least one of intensity or color or a change of at least one LED of the cluster to a non-emitting state; the cluster includes a plurality of the LEDS and the cluster includes non-contiguous LEDs; and

one of the first cluster or the second cluster includes non-contiguous LEDs; the determination of the first cluster includes selection of title first cluster based at least in part on known aimings of light associated with the first cluster having a correlation to the first position, the known aimings based at least in part on at least one of known directionality of light emitted by the first cluster or known directionality of light emitted by the first cluster exiting the headlamp; the determination of the second cluster includes selection of the second cluster based at least in part on known aimings of light associated with the second cluster having a correlation to the second position, the known aimings based at least in part on at least one of known directionality of light emitted by the second cluster or known directionality of light emitted by the second cluster exiting the headlamp; and the memory further stores instructions that, when executed by one or more processors of the controller, enable the controller to accommodate the road curvature by changing illumination in at least a direction of the road curvature by adaptation of light pattern in at least one of color, intensity or spatial distribution by modification of associated with one or more of the LEDs.	the memory further stores instructions that, when executed one or more processors of the controller, enable the controller to accommodate the road curvature by changing illumination in at least a direction of the road curvature by adaptation of the light pattern in at least one of color, intensity or spatial distribution by modification of light associated with one or more of the LEDs. 33. The illuminating device of claim 32 wherein: the memory further stores instructions that, when executed by one or more processors of the controller, enable the controller to select the cluster of LEDs based at least in part on known aimings of the first light associated with the first cluster having a correlation to the at least the portion, the known aimings based at least in part on at least one of known directionality of light emitted by the first cluster or known directionality of light emitted by the first cluster exiting the headlamp; the data includes image data; the one or more changes to characteristics of the first light include a change to at least one of intensity or color or a change of at least one LED of the cluster to a non-emitting state; and the cluster includes a plurality of the LEDs and the cluster includes non-contiguous LEDS.
Claim 51	
51. The illuminating device of claim 50, wherein: the memory further stores instructions that, when executed by one or more processors of the controller, enable the controller to illuminate the at least the portion with light below at least a predefined glare level;	27. The illuminating device of claim 26, wherein: the changed emission includes a change to at least one of intensity or color or a change of at least one LED of the cluster to a non-emitting state;

the at least one object includes at least one of a pedestrian, a sign, or another vehicle; at least one of the first cluster or the second cluster includes a plurality of the LEDs and at least one of the first cluster or the second cluster includes non-contiguous LEDs; the control of the light emitted from the first cluster includes a change of at least one LED of the cluster to a non-emitting state; the at least one emission characteristic is different following modification by an optical control element; the known aimings of light associated with the first cluster is based at least on part on known directionality of light emitted by LEDs of the first cluster exiting from the at least one headlamp; and the memory further stores instructions that, when executed by one or more processors of the controller, enable the controller to accommodate the road curvature by changing illumination in at least a direction of the road curvature by adaptation of the light pattern in at least one of color, intensity or spatial distribution by modification of light associated with one or more of the LEDs.	the cluster includes a plurality of the LEDS and the cluster includes non-contiguous LEDs; and the memory further stores instructions that, when executed one or more processors of the controller, enable the controller to accommodate the road curvature by changing illumination in at least a direction of the road curvature by adaptation of the light pattern in at least one of color, intensity or spatial distribution by modification of light associated with one or more of the LEDs. 49. The illuminating device of claim 48, wherein: the data includes image data; the memory further stores instructions that, when executed by one or more processors of the controller, enable the controller to illuminate the at least the portion with light below at least a predefined glare level; the at least one object includes at least one of a pedestrian, a sign, or another vehicle; at least one of the first cluster or the second cluster includes a plurality of the LEDs and at least one of the first cluster or the second cluster includes non-contiguous LEDs; the control of the light emitted from the first cluster includes a change of at least one LED of the cluster to a non-emitting state; the at least one emission characteristic is different following modification by an optical control element; and the known aimings of light associated with the first cluster is at east on part on known directionality of light emitted by LEDs of the first cluster exiting from the at least one headlamp.

Claims 28/36/44/52			
28. The illuminating device claim 26, wherein identification of the upcoming road curvature is based at least in part on map data and wherein the adaptation of the light pattern is based at least in part on the map data.	36. The illuminating device of claim 34 wherein the identification of the upcoming road curvature is based at least in part on map data and wherein the adaptation of the light pattern is based at least in part on the map data.	44. The illuminating device of claim 42, wherein the identification of the upcoming road curvature is based at least in part on map data and wherein the adaptation of the light pattern is based at least in part on the map data.	52. The illuminating device of claim 50, wherein the identification of the upcoming road curvature is based at least in part on map data and wherein the adaptation of the pattern is based at least in part on the map data.
Claims 29/37/45/63			
29. The illuminating device of claim 26, wherein the identification of the upcoming road curvature is based at least in part on sensor data provided by one or more of the sensors of the vehicle and wherein the adaptation of the light pattern is based in part on map data.	37. The illuminating device of claim 34, wherein the identification of the upcoming road curvature is based at least in part on sensor data provided by one or more of the sensors of the vehicle and wherein the adaptation of the light pattern is based at least in part on the sensor data.	45. The illuminating device of claim 42, wherein the identification of the upcoming road curvature is based at least in part on sensor data provided by one or more of the sensors of the vehicle and wherein the adaptation of the pattern is based at least in part on the sensor data.	53. The illuminating device of claim 50, wherein the identification of the upcoming road curvature is based at least in part on sensor data provided by one or more of the sensors of the vehicle and wherein the adaptation of the light pattern is based at least in part on the sensor data.
Claims 30/38/46/54			
30. The illuminating device of claim 24, further including one or more optical control elements to control light emitted from one or more of the LEDs.	38. The illuminating device of claim 32, further including one or more optical control elements to control light emitted from one or more of the LEDs.	46. The illuminating device of claim 40, further including one or more optical control element to control light emitted from one or more of the LEDs.	54. The illuminating device of claim 48, further including one or more optical control elements to control emitted from one or more of the LEDs.
Claims 31/39/47/55			
31. The illuminating device of claim 46,	39. The illuminating device of claim 46,	47. The illuminating device of claim 46,	55. The illuminating device of claim 54,

wherein the optical control elements include at least one of one or more reflectors, refractors or lenses.	wherein the optical control elements include at least one of one or more reflectors, refractors or lenses.	wherein the optical control elements include at least one of one or more reflectors, refractors or lenses.	wherein the optical control elements include at least one of one or more reflectors, refractors or lenses.

Elements 40.8a/40.8b/40.8d	
[40.8a] determine a first cluster of the LEDs illuminating at least a first portion of the first other vehicle based at least in part on data from one or more of the sensors indicating a first position associated with the first other vehicle.	[24.8] determine coordinates corresponding to another vehicle, based on the coordinate-specific information; [24.9] select a cluster of the LEDs that emit light toward at portion of the other vehicle based on the LEDs having emission aimings associated with the first coordinates; and
[40.8b] diminish glaring illumination of the first other vehicle by a first change to one or more characteristics of first light of at least the first cluster;	[24.10] change emission of the selected cluster of LEDs relative to emission of other LEDs not included in the cluster to create headlamp illumination that preserves a first level of illumination illuminating past the other vehicle while preventing glare to a driver of the other vehicle.
[40.8d] diminish glaring illumination of the second other vehicle by a first change to one or more characteristics of second light of at least the second cluster;	[24.10] change emission of the selected cluster of LEDs relative to emission of other LEDs not included in the cluster to create headlamp illumination that preserves a first level of illumination illuminating past the other vehicle while preventing glare to a driver of the other vehicle.

Claim 41	
41. The illuminating device of claim 40, wherein: the data includes image data; at least one of first or second change to characteristics of light associated with at least one of the first or second cluster of LEDs includes at least one of a chance to color, to	25. The illuminating device of claim 24, wherein: the changed emission includes a change to at least one of intensity or color or a change of at least one LED of the cluster to a non-emitting state; and the cluster includes a plurality of the LEDs and the cluster of non-contiguous LEDs.

intensity, or a change of at least one LEDs of the respective cluster to a non-emitting state; at least one of the first cluster or the second cluster includes a plurality of the LEDs and at least one of the first cluster or the second cluster includes non-contiguous LEDs; the determination of the first cluster includes selection of the first cluster based at least in part on known aimings of light associated with the first cluster having a correlation to the first position, the known aimings based at least in part on at least one of known directionality of light emitted by the first cluster or known directionality of light emitted by the first cluster exiting the headlamp; and the determination of the second cluster includes selection of the second cluster based at least in part on known aimings light associated with the second cluster having a correlation to the second position, the known aimings based at least in part on at least one of known directionality of light emitted by the second cluster or known directionality of light emitted by the second cluster exiting the headlamp.	33. The illuminating device of claim 32 wherein: the memory further stores instructions that, when executed by one or more processors of the controller, enable the controller to select the cluster of LEDs based at least in part on known aimings of the first light associated with the first cluster having a correlation to the at least the portion, the known aimings based at least in part on at least one of known directionality of light emitted by the first cluster or known directionality of light emitted by the first cluster exiting the headlamp; the data includes image data; the one or more changes to characteristics of the first light include a change to at least one of intensity or color or a change of at least one LED of the cluster to a non-emitting state; and the cluster includes a plurality of the LEDs and the cluster includes non-contiguous LEDS.
Elements 48.a and 48.b	
[48.a] illuminate a portion of at least one object, indicated by data from at least one of the one or more sensors, by selecting a first cluster of the LEDs to emit first light directed towards a first area including the at least the portion of at least one object, the first area determined based at least in part on the data, the first cluster selected based at least in part on known aimings of light associated with the first cluster determined to correspond to the first area, and the first light determined based at least in part on classifying the object based at least in part on the data; and	[24.8] determine coordinates corresponding to an other vehicle, based on the coordinate-specific information; [24.9] select a cluster of the LEDs that emit light toward at portion of the other vehicle based on the LEDs having emission aimings associated with the first coordinates; and 33. The illuminating device of claim 32 wherein: the memory further stores instructions that, when executed by one or more processors of the controller, enable the controller to select the cluster of LEDs based at least in

	part on known aimings of the first light associated with the first cluster having a correlation to the at least the portion, the known aimings based at least in part on at least one of known directionality of light emitted by the first cluster or known directionality of light emitted by the first cluster exiting the headlamp; the data includes image data; the one or more changes to characteristics of the first light include a change to at least one of intensity or color or a change of at least one LED of the cluster to a non-emitting state; and the cluster includes a plurality of the LEDs and the cluster includes non-contiguous LEDS.
[48.b] control light emitted from the first cluster directed towards the first area to be different in at least one emission characteristic, based on the first light determination, from second light emitted from a second, different cluster of the LEDs, directed towards one or more illuminated second areas at a common elevation with the first area and laterally adjacent to the area.	[32.8a] create a beam of diminished illumination illuminating at least a portion of the at least one target with non-glaring illumination, created in a broader field of illumination having different intensity than the beam, by one or more changes to characteristics of first light of a cluster of the LEDs providing the first light directed at the at least a portion and creating the beam, [32.8b] the beam diminished in intensity relative to the broader field of illumination illuminating at least above and on both sides of the beam; and
Claim 49	
49. The illuminating device of claim 48, wherein: the data includes image data; the memory further stores instructions that, when executed by one or more processors of the controller, enable the controller to illuminate the	25. The illuminating device of claim 24, wherein: the changed emission includes a change to at least one of intensity or color or a change of at least one LED of the cluster to a non-emitting state; and

at least the portion with light below at least a predefined glare level; the at least one object includes at least one of a pedestrian, a sign, or another vehicle; at least one of the first cluster or the second cluster includes a plurality of the LEDs and at least one of the first cluster or the second cluster includes non-contiguous LEDs; the control of the light emitted from the first cluster includes a change of at least one LED of the cluster to a non-emitting state; the at least one emission characteristic is different following modification by an optical control element; and the known aimings of light associated with the first cluster is at east on part on known directionality of light emitted by LEDs of the first cluster exiting from the at least one headlamp.	the cluster includes a plurality of the LEDs and the cluster of non-contiguous LEDs. 30. The illuminating device of claim 24, further including one or more optical control elements to control light emitted from one or more of the LEDs. 33. The illuminating device of claim 32 wherein: the memory further stores instructions that, when executed by one or more processors of the controller, enable the controller to select the cluster of LEDs based at least in part on known aimings of the first light associated with the first cluster having a correlation to the at least the portion, the known aimings based at least in part on at least one of known directionality of light emitted by the first cluster or known directionality of light emitted by the first cluster exiting the headlamp; the data includes image data; the one or more changes to characteristics of the first light include a change to at least one of intensity or color or a change of at least one LED of the cluster to a non-emitting state; and the cluster includes a plurality of the LEDs and the cluster includes non-contiguous LEDS.

Appendix B: Claim Listing

Element Number	Element
24.p	An illuminating device having automatic control of light provided to an illuminated area comprising:
24.1	a structure for incorporating illuminating device elements, wherein the structure comprises a motor vehicle;
24.2	a plurality of individually controllable LEDs incorporated in the structure via at least one headlamp mounted to the structure, each headlamp including at least one of the LEDs, the LEDs in communication with a power source;
24.3	electronic circuitry apparatus for the controlled powering of the LEDs and other of the illuminating device elements;
24.4	one or more processors;
24.5	one or more sensors, including one or more cameras, placed on the structure for detecting coordinate-specific information about the illuminated area, at least one of said cameras in communication with power, and in communication with at least one of the one or more processors

24.6	a controller, including at least one of the one or more processors, integrated with the structure via mounting, in communication with the controlling power electronic circuitry apparatus, said controller arranged to process the information communicated from the cameras and to automatically control the light provided to the illuminated area; and
24.7	memory storing instructions that, when executed by one or more processors of the controller, enable the controller to:
24.8	determine coordinates corresponding to an other vehicle, based on the coordinate-specific information;
24.9	select a cluster of the LEDs that emit light toward at portion of the other vehicle based on the LEDs having emission aimings associated with the first coordinates; and
24.10	change emission of the selected cluster of LEDs relative to emission of other LEDs not included in the cluster to create headlamp illumination that preserves a first level of illumination illuminating past the other vehicle while preventing glare to a driver of the other vehicle.
25	The illuminating device of claim 24, wherein:

	the changed emission includes a change to at least one of intensity or color or a change of at least one LED of the cluster to a non-emitting state; and the cluster includes a plurality of the LEDs and the cluster of non-contiguous LEDs.
26	The illuminating device of claim 24, wherein the memory further stores instructions that when executed by one or more processors of the controller, enable the controller to: identify an upcoming road curvature along a road on which the motor vehicle is traveling; and accommodate the upcoming road curvature by adaptation of a light pattern of at least one of the at least one headlamps.
27	The illuminating device of claim 26, wherein: the changed emission includes a change to at least one of intensity or color or a change of at least one LED of the cluster to a non-emitting state; the cluster includes a plurality of the LEDS and the cluster includes non-contiguous LEDs; and the memory further stores instructions that, when executed one or more processors of the controller, enable the controller to

	accommodate the road curvature by changing illumination in at least a direction of the road curvature by adaptation of the light pattern in at least one of color, intensity or spatial distribution by modification of light associated with one or more of the LEDs.
28.	The illuminating device claim 26, wherein identification of the upcoming road curvature is based at least in part on map data and wherein the adaptation of the light pattern is based at least in part on the map data.
29	The illuminating device of claim 26, wherein the identification of the upcoming road curvature is based at least in part on sensor data provided by one or more of the sensors of the vehicle and wherein the adaptation of the light pattern is based in part on map data.
30	The illuminating device of claim 24, further including one or more optical control elements to control light emitted from one or more of the LEDs.
31	The illuminating device of claim 30, wherein the optical control elements include at least one of one or more reflectors, refractors or lenses.

32.p	An illuminating device having automatic control of light provided to an illuminated area comprising:
32.1	a structure for incorporating illuminating device elements, wherein the structure comprises a motor vehicle;
32.2	a plurality of individually controllable LEDs incorporated in the structure via at least one headlamp mounted to the structure, each headlamp including at least one of the LEDs, the LEDs in communication with a power source;
32.3	electronic circuitry apparatus for the controlled powering of the LEDs and other of the illuminating device elements;
32.4	one or more processors;
32.5	one or more sensors, including one or more cameras, placed on the structure for detecting coordinate-specific information about the illuminated area, at least one of said cameras in communication with power, and in communication with at least one of the one or more processors
32.6	a controller, including at least one of the one or more processors, integrated with the structure via mounting, in communication with the controlling power electronic circuitry apparatus, said controller arranged to process the information

	communicated from the cameras and to automatically control the light provided to the illuminated area; and
32.7	memory storing instructions that, when executed by one or more processors of the controller, enable the controller to:
32.8a	create a beam of diminished illumination illuminating at least a portion of the at least one target with non-glaring illumination, created in a broader field of illumination having different intensity than the beam, by one or more changes to characteristics of first light of a cluster of the LEDs providing the first light directed at the at least a portion and creating the beam,
32.8b	the beam diminished in intensity relative to the broader field of illumination illuminating at least above and on both sides of the beam; and
32.9	follow, based at least in part on data from one or more of the cameras, the at least one target with the diminished illumination as the at least one target changes location relative to the motor vehicle.
33	The illuminating device of claim 32 wherein: the memory further stores instructions that, when executed by one or more processors of the controller, enable the controller

	to select the cluster of LEDs based at least in part on known aimings of the first light associated with the first cluster having a correlation to the at least the portion, the known aimings based at least in part on at least one of known directionality of light emitted by the first cluster or known directionality of light emitted by the first cluster exiting the headlamp; the data includes image data; the one or more changes to characteristics of the first light include a change to at least one of intensity or color or a change of at least one LED of the cluster to a non-emitting state; and the cluster includes a plurality of the LEDs and the cluster includes non-contiguous LEDS.
34	The illuminating device of claim 32, wherein the memory further stores instructions that, when executed by one or more processors of the controller, enable the controller to: identity an upcoming road curvature along a road on which the motor vehicle is traveling; and accommodate the upcoming road curvature by adaptation of a light pattern of at least one of the at least one headlamps.
35	The illuminating device of claim 14, wherein:

	the one or more changes to characteristics of the first light include a change to at least one of intensity or color or a change of at least one LED of the cluster to a non-emitting state; the cluster includes a plurality of the LEDs and the cluster includes non-contiguous LEDs; the memory further stores instructions that, when executed by one or more processors of the controller, enable the controller to select the cluster of LEDs based at least in part on known aimings of the first light associated with the first cluster having a correlation to the at least the portion, the known aimings based at least in part on at least one of known directionality of light emitted the first cluster or known directionality of light emitted by the first cluster exiting the headlamp; and the memory further stores instructions that, when executed by one or more processors of the controller, enable the controller to accommodate the road curvature by changing illumination in at least a direction of the road curvature by adaptation of the light pattern in at least one of color, intensity or spatial distribution by modification of light associated with one or more of the LEDs.

36	The illuminating device of claim 34 wherein the identification of the upcoming road curvature is based at least in part on map data and wherein the adaptation of the light pattern is based at least in part on the map data.
37	The illuminating device of claim 34, wherein the identification of the upcoming road curvature is based at least in part on sensor data provided by one or more of the sensors of the vehicle and wherein the adaptation of the light pattern is based at least in part on the sensor data.
38	The illuminating device of claim 32, further including one or more optical control elements to control light emitted from one or more of the LEDs.
39	The illuminating device of claim 38, wherein the optical control elements include at least one of one or more reflectors, refractors or lenses.
40.p	An illuminating device having automatic control of light provided to an illuminated area comprising:
40.1	a structure for incorporating illuminating device elements, wherein the structure comprises a motor vehicle;

40.2	a plurality of individually controllable LEDs incorporated in the structure via at least one headlamp mounted to the structure, each headlamp including at least one of the LEDs, the LEDs in communication a power source;
40.3	electronic circuitry apparatus for the controlled powering of the LEDs and other of the illuminating device elements;
40.4	one or more processors;
40.5	one or more sensors, including one or more cameras, placed on the structure for detecting coordinate-specific information about the illuminated area and positioned to capture an image of at least two other vehicles, at least one of said cameras in communication with power, and in communication with at least one of the one or more processors;
40.6	a controller, including at least one of the one or more processors, integrated with the structure via mounting, in communication with the LED controlling power electronic circuitry apparatus, said controller arranged to process the information communicated from the cameras and to automatically control the light provided to the illuminated area; and

40.7	memory storing instructions that, when executed by one or more processors of the controller, enable the controller to:
40.8a	determine a list cluster of the LEDs illuminating at least a first portion of a first other vehicle based at least in part on data from one or more of the sensors indicating a first position associated with the first other vehicle;
40.8b	diminish glaring illumination of the first other vehicle by a first change to one or more characteristics of first light of at least the first cluster;
40.8c	determine a second, different cluster of the LEDs illuminating at least a second portion of a second other vehicle based at least in part on the data indicating a second position associated with the second other vehicle;
40.8d	diminish glaring illumination of the second other vehicle by a second change to one or more characteristics of second light of at least the second, different cluster;
40.8e	wherein the first and second changes decrease intensity of first emission from the first cluster and second emission from the second cluster relative to a third emission, from the at least one

	headlamp, illuminating an area between the first and second portion.
41	The illuminating device of claim 40, wherein: the data includes image data; at least one of first or second change to characteristics of light associated with at least one of the first or second cluster of LEDs includes at least one of a chance to color, to intensity, or a change of at least one LEDs of the respective cluster to a non-emitting state; at least one of the first cluster or the second cluster includes a plurality of the LEDs and at least one of the first cluster or the second cluster includes non-contiguous LEDs; the determination of the first cluster includes selection of the first cluster based at least in part on known aimings of light associated with the first cluster having a correlation to the first position, the known aimings based at least in part on at least one of known directionality of light emitted by the first cluster or known directionality of light emitted by the first cluster exiting the headlamp; and

	the determination of the second cluster includes selection of the second cluster based at least in part on known aimings light associated with the second cluster having a correlation to the second position, the known aimings based at least in part on at least one of known directionality of light emitted by the second cluster or known directionality of light emitted by the second cluster exiting the headlamp.
42	The illuminating device of claim 40, wherein the memory further stores instructions that, when executed by one or more processors of the controller, enable the controller to: identify an upcoming road curvature along a road on which the motor vehicle is traveling; and accommodate the upcoming road curvature by adaptation of a light pattern of at least one of the at least one headlamps.
43	The illuminating device of claim 42, wherein: at least one of the first or second change to characteristics of the associate with at least one of the first or second cluster of LEDs includes at least one of a change to color, to intensity, or a change of at one LED of the respective cluster to a non-emitting state;

	at least one of the cluster or the second cluster includes a plurality of the LEDs and at least one of the first cluster or the second cluster includes non-contiguous LEDs; the determination of the first cluster includes selection of title first cluster based at least in part on known aimings of light associated with the first cluster having a correlation to the first position, the known aimings based at least in part on at least one of known directionality of light emitted by the first cluster or known directionality of light emitted by the first cluster exiting the headlamp; the determination of the second cluster includes selection of the second cluster based at least in part on known aimings of light associated with the second cluster having a correlation to the second position, the known aimings based at least in part on at least one of known directionality of light emitted by the second cluster or known directionality of light emitted by the second cluster exiting the headlamp; and the memory further stores instructions that, when executed by one or more processors of the controller, enable the controller to accommodate the road curvature by changing illumination in at

	least a direction of the road curvature by adaptation of light pattern in at least one of color, intensity or spatial distribution by modification of associated with one or more of the LEDs.
44	The illuminating device of claim 42, wherein the identification of the upcoming road curvature is based at least in part on map data and wherein the adaptation of the light pattern is based at least in part on the map data.
45	The illuminating device of claim 42, wherein the identification of the upcoming road curvature is based at least in part on sensor data provided by one or more of the sensors of the vehicle and wherein the adaptation of the pattern is based at least in part on the sensor data.
46	The illuminating device of claim 40, further including one or more optical control element to control light emitted from one or more of the LEDs.
47	The illuminating device of claim 46, wherein the optical control elements include at least one of one or more reflectors, refractors or lenses.
48.p	An illuminating device having automatic control of light provided to an illuminated area comprising:

48.1	a structure for incorporating illuminating device elements, wherein the structure comprises a motor vehicle;
48.2	a plurality of individually controllable LEDs incorporated in the structure via at least one headlamp mounted to the structure, each headlamp including at least one of the LEDs, the LEDs in communication with a power source;
48.3	electronic circuitry apparatus for the controlled powering of the LEDs and other of the illuminating device elements;
48.5	one or more processors;
48.6	one or more sensors, including one or more cameras, placed on the structure for detecting coordinate-specific information about the illuminated area, at least one of said cameras in communication with power, and in communication with at least one of the one or more processors;
48.7	a controller including at least one o[f] the one or more processors, integrated with the structure via mounting, in communication with the LED controlling power electronic circuitry apparatus, said controller arranged to process the information, communicated from the cameras and to

	automatically control the light provided to the illuminated area; and
48.8	memory storing instructions that, when executed by one or more processors of the controller, enable the controller to:
48.9a	illuminate a portion of at least one object, indicated by data from at least one of the one or more sensors, by selecting a first cluster of the LEDs to emit first light directed towards a first area including the at least the portion of at least one object, the first area determined based at least in part on the data, the first cluster selected based at least in part on known aimings of light associated with the first cluster determined to correspond to the first area, and the first light determined based at least in part on classifying the object based at least in part on the data; and
48.9b	control light emitted from the first cluster directed towards the first area to be different in at least one emission characteristic, based on the first light determination, from second light emitted from a second, different cluster of the LEDs, directed towards one or more illuminated second areas at a common elevation with the first area and laterally adjacent to the area.
49	The illuminating device of claim 48, wherein:

	the data includes image data; the memory further stores instructions that, when executed by one or more processors of the controller, enable the controller to illuminate the at least the portion with light below at least a predefined glare level; the at least one object includes at least one of a pedestrian, a sign, or another vehicle; at least one of the first cluster or the second cluster includes a plurality of the LEDs and at least one of the first cluster or the second cluster includes non-contiguous LEDs; the control of the light emitted from the first cluster includes a change of at least one LED of the cluster to a non-emitting state; the at least one emission characteristic is different following modification by an optical control element; and the known aimings of light associated with the first cluster is at east on part on known directionality of light emitted by LEDs of the first cluster exiting from the at least one headlamp.

50	The illuminating device of claim 48, wherein the memory further stores instructions that, when executed by one or more processors of the controller, enable the controller to: identify an upcoming road curvature along a road on which the motor vehicle is traveling; and accommodate the upcoming road curvature by adaptation of a light pattern of at least one of the headlamps.
51	The illuminating device of claim 50, wherein: the memory further stores instructions that, when executed by one or more processors of the controller, enable the controller to illuminate the at least the portion with light below at least a predefined glare level; the at least one object includes at least one of a pedestrian, a sign, or another vehicle; at least one of the first cluster or the second cluster includes a plurality of the LEDs and at least one of the first cluster or the second cluster includes non-contiguous LEDs; the control of the light emitted from the first cluster includes a change of at least one LED of the cluster to a non-emitting state;

	the at least one emission characteristic is different following modification by an optical control element; the known aimings of light associated with the first cluster is based at least on part on known directionality of light emitted by LEDs of the first cluster exiting from the at least one headlamp; and the memory further stores instructions that, when executed by one or more processors of the controller, enable the controller to accommodate the road curvature by changing illumination in at least a direction of the road curvature by adaptation of the light pattern in at least one of color, intensity or spatial distribution by modification of light associated with one or more of the LEDs.
52	The illuminating device of claim 50, wherein the identification of the upcoming road curvature is based at least in part on map data and wherein the adaptation of the pattern is based at least in part on the map data.
53	The illuminating device of claim 50, wherein the identification of the upcoming road curvature is based at least in part on sensor data provided by one or more of the sensors of the

	vehicle and wherein the adaptation of the light pattern is based at least in part on the sensor data.
54	The illuminating device of claim 48, further including one or more optical control elements to control emitted from one or more of the LEDs.
55	The illuminating device of claim 54, wherein the optical control elements include at least one of one or more reflectors, refractors or lenses.