change to intensity or color or a change of at least one of the LEDs to a non-emitting state.	spatial distribution of intensity and spectral distribution for the viewing task at hand.
82. (New) The illuminating device of claim 80, wherein the memory further stores instructions that, when executed by one or more processors of the controller, enable the controller to:	**51:43-47** Present advances in automobile lighting include Adaptive Frontal-lighting Systems which aid in seeing around curves and other features in the road. In these systems the light distribution pattern and color spectrum will be changed according to the instantaneous road conditions at hand.
identify an upcoming road curvature along a road on which the motor vehicle is traveling; and	**51:43-47** Present advances in automobile lighting include Adaptive Frontal-lighting Systems which aid in seeing around curves and other features in the road. In these systems the light distribution pattern and color spectrum will be changed according to the instantaneous road conditions at hand.
accommodate the upcoming road curvature by adaptation of a light pattern of at least one of the at least one headlamps.	**51:43-56** Present advances in automobile lighting include Adaptive Frontal-lighting Systems which aid in seeing around curves and other features in the road. In these systems the light distribution pattern and color spectrum will be changed according to the instantaneous road conditions at hand. In these systems the light distribution

	pattern and color spectrum will be changed according to the instantaneous road conditions at hand. Thus, the headlamp now has much more flexibility than the high beam/low beam variation of today. At any instant in time the intensity, spectrum and beam pattern of the headlamp may be varied as a function of the drivers intent, lay of the road and environmental factors. A GPS system on the car may also let the headlamps system know of curves up ahead, one way traffic and others factors such the headlamp may be operated in the optimal mode at that instantaneous location.
83. (New) The illuminating device of claim 82, wherein:	
the change to emission of the one or more LEDs aimed towards the at least the portion includes a change to intensity or color or a change of at least one of the LEDs to a non-emitting state;	**19:26-30** The discrete light emitting elements by operating and not operating, at full power or at a fraction of, either partially or in unison, generate light with optimal intensity, spectral distribution, and spatial distribution of intensity and spectral distribution for the viewing task at hand.
the memory further stores instructions that, when executed by one or more processors of the controller, enable the controller to select a first	**45:52-57** The controller **195**, based on the camera input runs the pattern recognition routines, derives the coordinates and generates instructions to drive the specific light sources with aimings which will project light at the speaker as the speaker move about the room.

cluster of LEDs, associated with the first light, for the change, based at least in part on known aimings of the first light associated with the first cluster having a correlation to the at least the portion, the known aimings based at least in part on at least one of known directionality of light emitted by the first cluster or known directionality of light emitted by the first cluster exiting the headlamp; and	**25:5-9** The direction of light exiting from the DLF as a whole or from each SLS individually is controllable by optical elements **6**, such as reflective surfaces and or refractors, and may be electronically variable optical elements. **1:25-36** The present invention is in the field of radiation producing devices. More particularly, the present invention is in the technical field of lighting fixtures. However, radiation used for headlamps, heating, night vision, UV or visible light curing, medical X-rays and other radiation uses are covered as well. General lighting fixtures otherwise known as luminaires will be used as the primary example while other irradiating devices such as infrared heaters are covered as well. The invention relates to multiple light source illuminating devices intended to replace incandescent, fluorescent and HID luminaries in general and specialty lighting applications. **95:3-14** There has thus been shown and described, among other things, a multiple-source lighting technology which allows for the design and construction of illuminating devices. Many changes, modifications, variations and other uses and applications of the subject invention will, however, become apparent to those skilled in the art after considering this specification and the accompanying drawings which disclose the preferred embodiments thereof. All such changes, modifications, variations and other uses and applications which do not depart from the spirit and scope of the invention are

	deemed to be covered by the invention without departing from the spirit or scope of the following claims.
the memory further stores instructions that, when executed by one or more processors of the controller, enable the controller to accommodate the road curvature by changing illumination in at least a direction of the road curvature by adaptation of the light pattern in at least one of color, intensity or spatial distribution by modification of light associated with one or more of the LEDs.	**51:51-56** At any instant in time the intensity, spectrum and beam pattern of the headlamp may be varied as a function of the drivers intent, lay of the road and environmental factors. A GPS system on the car may also let the headlamps system know of curves up ahead, one way traffic and others factors such the headlamp may be operated in the optimal mode at that instantaneous location.
84. (New) The illuminating device of claim 82, wherein the identification of the upcoming road curvature is based at least in part on map data and wherein the	**51:43-57** Present advances in automobile lighting include Adaptive Frontal-lighting Systems which aid in seeing around curves and other features in the road. In these systems the light distribution pattern and color spectrum will be changed according to the instantaneous road conditions at hand. Thus, the headlamp now has much more flexibility than the high beam/low beam variation of today. At any

adaptation of the light pattern is based at least in part on the map data.	instant in time the intensity, spectrum and beam pattern of the headlamp may be varied as a function of the drivers intent, lay of the road and environmental factors. A GPS system on the car may also let the headlamps system know of curves up ahead, one way traffic and others factors such the headlamp may be operated in the optimal mode at that instantaneous location. With sensors sensitive to environmental surroundings such as ambient light, fog or snow conditions etc. lighting can be adapted to the optimal operating regime.
85. (New) The illuminating device of claim 82, wherein the identification of the upcoming road curvature is based at least in part on sensor data provided by one or more of the sensors of the vehicle and wherein the adaptation of the light pattern is based at least in part on the sensor data.	**51:43-57** Present advances in automobile lighting include Adaptive Frontal-lighting Systems which aid in seeing around curves and other features in the road. In these systems the light distribution pattern and color spectrum will be changed according to the instantaneous road conditions at hand. Thus, the headlamp now has much more flexibility than the high beam/low beam variation of today. At any instant in time the intensity, spectrum and beam pattern of the headlamp may be varied as a function of the drivers intent, lay of the road and environmental factors. A GPS system on the car may also let the headlamps system know of curves up ahead, one way traffic and others factors such the headlamp may be operated in the optimal mode at that instantaneous location. With sensors sensitive to environmental surroundings such as ambient light, fog or snow conditions etc. lighting can be adapted to the optimal operating regime.

86. (New) The illuminating device of claim 80, further including one or more optical control elements to control light emitted from one or more of the LEDs.	**25:5-9** The direction of light exiting from the DLF as a whole or from each SLS individually is controllable by optical elements **6**, such as reflective surfaces and or refractors, and may be electronically variable optical elements.
87. (New) The illuminating device of claim 86, wherein the optical control elements include at least one of one or more reflectors, refractors or lenses.	**25:5-9** The direction of light exiting from the DLF as a whole or from each SLS individually is controllable by optical elements **6**, such as reflective surfaces and or refractors, and may be electronically variable optical elements.

Exhibit OTH-E

Industry Praise Nexus Support

Claims – 9,955,551	112 Support	Industry Praise
Claim 6		
An illuminating device having automatic control of the light provided to an illuminated area comprising:	**Claim 6 of the '551 Patent**	HELLA "has won the prestigious 2014 Automotive News PACE Award for its industry-first adaptive LED Matrix Beam technology. . . HELLA's "glare-free high-beam" **headlights use individually controlled LEDs that adjust automatically** to real-time traffic conditions to reduce glare for other drivers." (Ex. 10, PR Newswire at 1, emphasis added.) *See* Ex. OTH-A, "Stam Decl." at ¶107-108.
a structure for incorporating illuminating device elements;	**Claim 6 of the '551 Patent** **Fig. 15 (bottom):**	The system automatically adjusts a **car's headlamps** to deliver "glare free" illumination, dimming or switching on and off light sources based on traffic conditions. (Ex. 10 at 1, emphasis added.) *See* Ex. OTH-A at ¶107, 109.

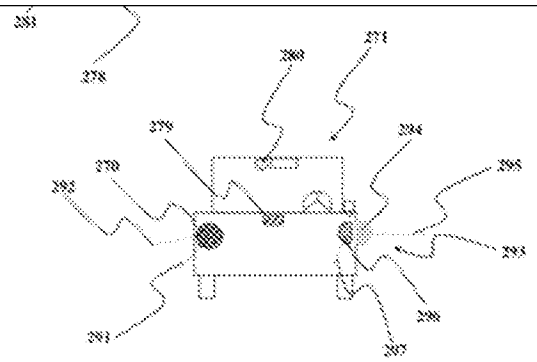

53:45 – 54:47

Thus when following another vehicle, assuming, as drivers have reported, that they find yellow incandescent colored headlamps less offending than the HID blue-white color, the external controller **279** which receives traffic data from sensors **280** … a cluster **281** would be used to illuminate around a corner. Thus when the turn indicator has been selected or the steering wheel has been rotated by the driver, the DLF headlamp is powered by the controller to illuminate sideways at angles which according to the speed of travel is correct. (A driver can't make a 90-degree turn traveling 90 kph but from a stop, the turn may be around a corner.) In a preferred embodiment a multitude of LEDs in **281** are differently aimed in top view **274** showing the top view of the cluster **282** with SLS **283** angled less outwards and SLS **284** angled more outward with the forward aiming (distance ahead of the

	vehicle) of the more angled SLS **284**, closer in for illuminating sharp turn, than that of the less angled SLS **283** for a shallow curve. Side sectional view **273** shows a general downward aiming with SLSs of front view **272** cluster **285** corresponding to cluster **286** shown from the side. The cluster **286** is the most angled downward such as for a slow driving as in a parking light type of application where the idea is not to cause glare yet be seen. The parking light function can also be done with higher angled LEDs by just lowering the intensity to very low non-glaring intensities. Cluster **287** of the front view would be the main illuminating workhorse and is shown in side view **273** as angled SLSs in cluster **288** and top view **274** as cluster **289**. The top cluster **276** shown in side view **273**, as **290** would perform alone or in tandem with part of **287** the high beam lighting function… In one embodiment the digital headlamp carries out all the functions in a single unit **270**. SLSs have different locations and aimings **291** and **292** to carry out the functions. In another embodiment **293** the spotlight sign illuminating function or corner lighting function is in a separate package **294** with its aiming **295**. The low and high beam lighting is accomplished with	

	fixture **296** and its general aiming **297**. The separate units may be dictated by design or sales considerations and yield more flexibility but are within the scope of the overall integral digital lamp headlight device. The controller **279** will addresses the power supply of each DLF headlamp **270**, **296** and **294** independently such that each lamp performs its functions separately.	
one or more light sources incorporated in the structure and in communication with a power source;	**Claim 6 of the '551 patent** **Fig. 15 (top):** 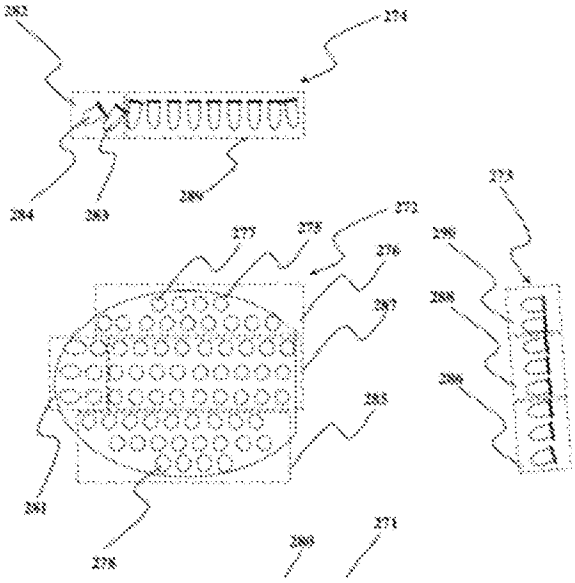 **53:13-37** In FIG. 16 a headlamp **270** of a land, sea or air vehicle **271** is shown in front view **272**, side view of a section **273** and top view of a section **274**. A discreet SLS light source	HELLA "has won the prestigious 2014 Automotive News PACE Award for its industry-first adaptive LED Matrix Beam technology. . . HELLA's "glare-free high-beam" **headlights use individually controlled LEDs that adjust automatically** to real-time traffic conditions to reduce glare for other drivers." (Ex.10 at 1, emphasis added.) A POSITA "would readily understand that such an automatically adjustable system would include

	such as an LED **275** with specific location within the cluster **276** has a specific spatial light distribution, color wavelength and aiming relative to the vehicle, such as straight ahead, and or downwards and or off towards the right or left. The SLS may have one junction and be monochromatic or have a many junctions and provide a wide spectral power distribution and the power to the SLS may be varied. An SLS can also be a "white" LED. For example a typical "white" LED such as a Luxeon® white LED such as LXHL-XXXX will have a colder "bluish" 4,500K color temperature. LED **277** at a second location within the same cluster may have a similar or dissimilar aiming, wavelength and spatial light distribution. The concept cluster shown by the dashed lines, is used to describe a control function and is not necessarily related to contiguous placement. In general a cluster may be deemed a separate grouping due to a function it performs, either exclusively or in conjunction with other clusters or sub-clusters, such as high beam function versus a second cluster **278** which may provide a parking light function. The same SLS may be used, albeit at different intensities, for both the above functions and thus clusters may overlap and be discontinuous.	individually controllable LEDs in communication with a power source." *See* Ex. OTH-A at ¶107, 110.

	17:3-16 As used herein, the term "light source", LED or "solid state light source" means any system that is capable of receiving an electrical signal and producing light in response to the signal. Thus, the term "light source" should be understood to include light emitting diodes of all types, light emitting polymers, semiconductor dies that produce or emanate light in response to current, organic LEDs, electro-luminescent strips, and other such systems. Incandescent and discharge light sources are also included and multiples of incandescent and discharge light sources also provide a digital luminaire. In an embodiment, a "light source" may refer to a single light emitting diode package including multiple semiconductor LED dies that are individually controlled.	
electronic circuitry apparatus for the controlled powering of the light source and other illuminating device elements;	**Claim 6 of the '551 patent**	HELLA "has won the prestigious 2014 Automotive News PACE Award for its industry-first adaptive LED Matrix Beam technology. . . HELLA's "glare-free high-beam" **headlights use individually controlled LEDs that adjust automatically** to real-time

		traffic conditions to reduce glare for other drivers." (Ex. 10 at 1, emphasis added.) The system automatically adjusts a **car's headlamps** to deliver "glare free" illumination, dimming or switching on and off light sources based on traffic conditions. *Id.* "[F]rom the described functionality, it's clear that the praise is directed to an illuminating device, including *electronic circuitry apparatus for the controlled powering of the LEDs and other of the illuminating device elements*." (Ex. OTH-A at ¶107,111.)
one or more cameras placed on the structure for detecting coordinate-specific information about the illuminated area, said camera in communication with	**Claim 6 of the '551 patent** **25:34-42** In a preferred embodiment the DLF contains logic control electronics unit 7. Logic control electronics unit, 7, receives input and/or feedback from motion, intensity and/or spectral sensors **8**, or from	"The **new Matrix Beam system combines a front camera**, high-performance software and "intelligent lighting" technology **to recognize cars that are being followed as well as**

power and control device elements;	manual control button **9** and increases or decreases or turns on or shuts off the power to one or more of the SLS to effect the desired change. That is, the control logic unit **7** has stored parameters for intensity and spectral distribution and operates the MSLS lamp within the predefined range. **25:53-67** Sensors **8** include any of the following: light, temperature and motion detection devices. Two types of optical detection sensors may be used: A photo detector with specific spectral sensitivity to detect a specific color. For example a standard red, blue and green set which would then indicate how "white" the light is. Alternately, a wide spectrum photo detector that irrespective of color measures the intensity of each excited die as it is test fired, based on the eye visual sensitivity curve. The optical sensor may be lensed and capable of forming an image, that is a camera and the detector may be a detector array of photodiode pixels. The detector array may be a CMOS or CCD VSLI array and may be monochromatic or color as in a monochromatic or digital camera. Such arrays are readily available in mega-pixel resolution.	**oncoming traffic**." (Ex. 10 at 1, emphasis added 1.) "[F]rom this sentence, it's clear to a person skilled in the art that the industry praise is directed to an illuminating device that includes the details of the camera sensor limitation." (Ex. OTH-A at ¶107, ¶112.)

a controller integrated with the structure, in communication with the light source controlling power circuitry, said controller arranged to processes the information communicated from the camera and automatically control the light provided to the illuminated area.	**Claim 6 of the '551 patent** **25:34-52** In a preferred embodiment the DLF contains logic control electronics unit 7. Logic control electronics unit, 7, receives input and/or feedback from motion, intensity and/or spectral sensors 8, or from manual control button 9 and increases or decreases or turns on or shuts off the power to one or more of the SLS to effect the desired change. That is, the control logic unit 7 has stored parameters for intensity and spectral distribution and operates the MSLS lamp within the predefined range. The control unit may include a DSP or computer with storage media, computer algorithms, signal input and output electronics, analog to digital converters, and communications elements to carry out intensity, distribution, dimming and color balance control. Computer algorithms and instruction sets 7A are induced by the logical controller to manipulate data, calculate results generate output signals and maintain the operating parameters within the specifications. Measured parameters are checked against the stored parameters and the control circuitry adjusts the power to SLS.	A leader in automotive lighting and electronics, HELLA's "glare-free high-beam" headlights use **individually controlled LEDs that adjust automatically to real-time traffic conditions** to reduce glare for other drivers. (Ex. 10 at 1, emphasis added.) **The new Matrix Beam system combines a front camera, high-performance software and "intelligent lighting" technology to recognize cars that are being followed as well as oncoming traffic**. *Id* **The system automatically adjusts a car's headlamps to deliver "glare free" illumination, dimming or switching on and off light sources based on traffic conditions**." *Id.* "[F]rom the above sentences, and the inherent knowledge possessed by a person skilled

	53:48-50 … the external controller **279** which receives traffic data from sensors **280** …	in the art, it's clear that the industry praise is directed to an illuminating device that includes the details of the controller limitation, wherein the controller processes information from the camera". (Ex. OTH-A at ¶107, 113.)
Claim 24 (New)		
An illuminating device having automatic control of light provided to an illuminated area comprising:	**Claim 6 of the '551 Patent**	HELLA "has won the prestigious 2014 Automotive News PACE Award for its industry-first adaptive LED Matrix Beam technology. . . HELLA's "glare-free high-beam" **headlights use individually controlled LEDs that adjust automatically** to real-time traffic conditions to reduce glare for other drivers." (Ex. 10 at 1, emphasis added.) *See* Ex. OTH-A at ¶107-108.
a structure for incorporating illuminating device elements, wherein the	**Claim 6 of the '551 Patent** **Fig. 15 (bottom):**	The system automatically adjusts a **car's headlamps** to deliver "glare free" illumination, dimming or

structure comprises a motor vehicle;	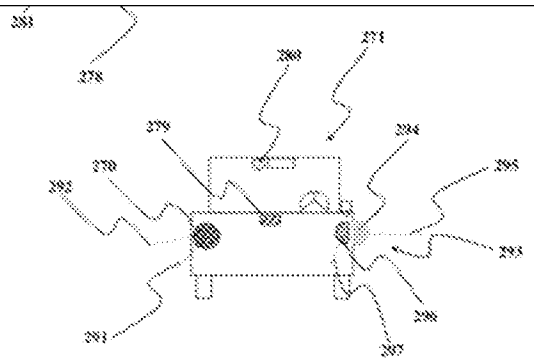 **53:45 – 54:47** Thus when following another vehicle, assuming, as drivers have reported, that they find yellow incandescent colored headlamps less offending than the HID blue-white color, the external controller **279** which receives traffic data from sensors **280** … a cluster **281** would be used to illuminate around a corner. Thus when the turn indicator has been selected or the steering wheel has been rotated by the driver, the DLF headlamp is powered by the controller to illuminate sideways at angles which according to the speed of travel is correct. (A driver can't make a 90-degree turn traveling 90 kph but from a stop, the turn may be around a corner.) In a preferred embodiment a multitude of LEDs in **281** are differently aimed in top view **274** showing the top view of the cluster **282** with SLS **283** angled less outwards and SLS **284** angled more outward with the forward aiming (distance ahead of the	switching on and off light sources based on traffic conditions. (Ex. 10 at 1, emphasis added.) *See* Ex. OTH-A at ¶107, 109.

	vehicle) of the more angled SLS **284**, closer in for illuminating sharp turn, than that of the less angled SLS **283** for a shallow curve. Side sectional view **273** shows a general downward aiming with SLSs of front view **272** cluster **285** corresponding to cluster **286** shown from the side. The cluster **286** is the most angled downward such as for a slow driving as in a parking light type of application where the idea is not to cause glare yet be seen. The parking light function can also be done with higher angled LEDs by just lowering the intensity to very low non-glaring intensities. Cluster **287** of the front view would be the main illuminating workhorse and is shown in side view **273** as angled SLSs in cluster **288** and top view **274** as cluster **289**. The top cluster **276** shown in side view **273**, as **290** would perform alone or in tandem with part of **287** the high beam lighting function… In one embodiment the digital headlamp carries out all the functions in a single unit **270**. SLSs have different locations and aimings **291** and **292** to carry out the functions. In another embodiment **293** the spotlight sign illuminating function or corner lighting function is in a separate package **294** with its aiming **295**. The low and high beam lighting is accomplished with	

	fixture **296** and its general aiming **297**. The separate units may be dictated by design or sales considerations and yield more flexibility but are within the scope of the overall integral digital lamp headlight device. The controller **279** will addresses the power supply of each DLF headlamp **270**, **296** and **294** independently such that each lamp performs its functions separately.	
a plurality of individually controllable LEDs incorporated in the structure via at least one headlamp mounted to the structure, each headlamp including at least one of the LEDs, the LEDs in communication with a power source;	**Claim 6 of the '551 patent** **Fig. 15 (top):** 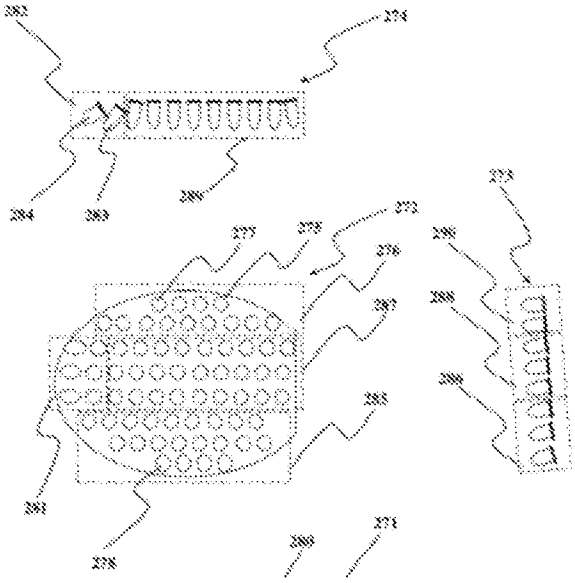 **53:13-37** In FIG. 16 a headlamp **270** of a land, sea or air vehicle **271** is shown in front view **272**, side view of a section **273** and top view of a section **274**. A discreet SLS light source	HELLA "has won the prestigious 2014 Automotive News PACE Award for its industry-first adaptive LED Matrix Beam technology. . . HELLA's "glare-free high-beam" **headlights use individually controlled LEDs that adjust automatically** to real-time traffic conditions to reduce glare for other drivers." (Ex. 10 at 1, emphasis added.) The system automatically adjusts a **car's headlamps** to deliver "glare free" illumination, dimming or switching on and off light

	such as an LED **275** with specific location within the cluster **276** has a specific spatial light distribution, color wavelength and aiming relative to the vehicle, such as straight ahead, and or downwards and or off towards the right or left. The SLS may have one junction and be monochromatic or have a many junctions and provide a wide spectral power distribution and the power to the SLS may be varied. An SLS can also be a "white" LED. For example a typical "white" LED such as a Luxeon® white LED such as LXHL-XXXX will have a colder "bluish" 4,500K color temperature. LED **277** at a second location within the same cluster may have a similar or dissimilar aiming, wavelength and spatial light distribution. The concept cluster shown by the dashed lines, is used to describe a control function and is not necessarily related to contiguous placement. In general a cluster may be deemed a separate grouping due to a function it performs, either exclusively or in conjunction with other clusters or sub-clusters, such as high beam function versus a second cluster **278** which may provide a parking light function. The same SLS may be used, albeit at different intensities, for both the above functions and thus clusters may overlap and be discontinuous.	sources based on traffic conditions. *Id.* A POSITA "would readily understand that such an automatically adjustable system would include individually controllable LEDs in communication with a power source". *See* Ex. OTH-A at ¶107.

	17:3-16 As used herein, the term "light source", LED or "solid state light source" means any system that is capable of receiving an electrical signal and producing light in response to the signal. Thus, the term "light source" should be understood to include light emitting diodes of all types, light emitting polymers, semiconductor dies that produce or emanate light in response to current, organic LEDs, electro-luminescent strips, and other such systems. Incandescent and discharge light sources are also included and multiples of incandescent and discharge light sources also provide a digital luminaire. In an embodiment, a "light source" may refer to a single light emitting diode package including multiple semiconductor LED dies that are individually controlled.	
electronic circuitry apparatus for the controlled powering of the LEDs and other of the illuminating device elements;	**Claim 6 of the '551 patent**	HELLA "has won the prestigious 2014 Automotive News PACE Award for its industry-first adaptive LED Matrix Beam technology. . . HELLA's "glare-free high-beam" **headlights use individually controlled LEDs that adjust automatically** to real-time

		traffic conditions to reduce glare for other drivers." (Ex. 10 at 1, emphasis addedp. 1.) The system automatically adjusts a **car's headlamps** to deliver "glare free" illumination, dimming or switching on and off light sources based on traffic conditions. *Id.* "[F]rom the described functionality, it's clear that the praise is directed to an illuminating device, including *electronic circuitry apparatus for the controlled powering of the LEDs and other of the illuminating device elements*." (Ex. OTH-A at ¶107, ¶111.)
one or more processors;	**18:23-29** In a preferred embodiment the DLF is provided with an onboard controller. The controller may be a computer board, embedded device, a Digital Signal Processor, etc. In general, the term "logical controller, controller or computer" can be	

	broadly defined to encompass any device having control circuitry or a processor which executes instructions from a memory medium.	
one or more sensors, including one or more cameras, placed on the structure for detecting coordinate-specific information about the illuminated area, at least one of said cameras in communication with power, and in communication with at least one of the one or more processors;	**Claim 6 of the '551 patent** **25:34-42** In a preferred embodiment the DLF contains logic control electronics unit **7**. Logic control electronics unit, **7**, receives input and/or feedback from motion, intensity and/or spectral sensors **8**, or from manual control button **9** and increases or decreases or turns on or shuts off the power to one or more of the SLS to effect the desired change. That is, the control logic unit **7** has stored parameters for intensity and spectral distribution and operates the MSLS lamp within the predefined range. **25:53 – 67** Sensors **8** include any of the following: light, temperature and motion detection devices. Two types of optical detection sensors may be used: A photo detector with specific spectral sensitivity to detect a specific color. For example a standard red, blue and green set which would then indicate how "white" the light is. Alternately, a wide spectrum photo detector that irrespective of color measures the	"The **new Matrix Beam system combines a front camera**, high-performance software and "intelligent lighting" technology **to recognize cars that are being followed as well as oncoming traffic**." (Ex. 10 at 1, emphasis added.) ""[F]rom this sentence, it's clear to a person skilled in the art that the industry praise is directed to an illuminating device that includes the details of the camera sensor limitation." (Ex. OTH-A at ¶107, ¶112.)

	intensity of each excited die as it is test fired, based on the eye visual sensitivity curve. The optical sensor may be lensed and capable of forming an image, that is a camera and the detector may be a detector array of photodiode pixels. The detector array may be a CMOS or CCD VSLI array and may be monochromatic or color as in a monochromatic or digital camera. Such arrays are readily available in mega-pixel resolution.	
a controller, including at least one of the one or more processors, integrated with the structure via mounting, in communication with the LED controlling power electronic circuitry apparatus, said controller arranged to process the information communicated from the cameras and to automatically control the light provided to the illuminated area; and	**Claim 6 of the '551 patent** **25:34-52** In a preferred embodiment the DLF contains logic control electronics unit 7. Logic control electronics unit, 7, receives input and/or feedback from motion, intensity and/or spectral sensors **8**, or from manual control button **9** and increases or decreases or turns on or shuts off the power to one or more of the SLS to effect the desired change. That is, the control logic unit 7 has stored parameters for intensity and spectral distribution and operates the MSLS lamp within the predefined range. The control unit may include a DSP or computer with storage media, computer algorithms, signal input and output electronics, analog to digital converters, and communications elements to carry out	A leader in automotive lighting and electronics, HELLA's "glare-free high-beam" headlights use **individually controlled LEDs that adjust automatically to real-time traffic conditions** to reduce glare for other drivers. (Ex. 10 at 1, emphasis added.) **The new Matrix Beam system combines a front camera, high-performance software and "intelligent lighting" technology to recognize cars that are being followed as well as oncoming traffic**. *Id.*

	intensity, distribution, dimming and color balance control. Computer algorithms and instruction sets 7A are induced by the logical controller to manipulate data, calculate results generate output signals and maintain the operating parameters within the specifications. Measured parameters are checked against the stored parameters and the control circuitry adjusts the power to SLS. **53:48-50** … the external controller **279** which receives traffic data from sensors **280** …	**The system automatically adjusts a car's headlamps to deliver "glare free" illumination, dimming or switching on and off light sources based on traffic conditions**. *Id.* '[F]rom the above sentences, and the inherent knowledge possessed by a person skilled in the art, it's clear that the industry praise is directed to an illuminating device that includes the details of the controller limitation, wherein the controller processes information from the camera". (Ex. OTH-A at ¶107, ¶.)
memory storing instructions that, when executed by one or more processors of the controller, enable the controller to:	**25:42-50** The control unit may include a DSP or computer with storage media, computer algorithms, signal input and output electronics, analog to digital converters, and communications elements to carry out intensity, distribution, dimming and color balance control. Computer algorithms and instruction sets 7A are induced by the logical controller to manipulate data, calculate results generate output signals and	The new Matrix Beam system combines a front camera, **high-performance software and "intelligent lighting" technology to recognize cars that are being followed as well as oncoming traffic**. (Ex. 10 at 1, emphasis added.)

	maintain the operating parameters within the specifications. **54:45-47** The controller **279** will addresses the power supply of each DLF headlamp **270**, **296** and **294** independently such that each lamp performs its functions separately.	The system automatically adjusts a car's headlamps to deliver "glare free" illumination, dimming or switching on and off light sources based on traffic conditions. *Id.* **Individually controlled LEDs also provide two or more dark zones with "light in-between," allowing continuous use of a vehicle's high-beams to maximize visibility and provide a safer driving experience.** *Id.* From the above sentences and the inherent knowledge of a person skilled in the art, "in order to implement the 'high performance software' it's clear that *memory storing instructions* would necessarily be provided. (Ex. OTH-A at ¶107, ¶114).
determine first coordinates corresponding to an other vehicle, based on	**45:53-55** The controller **195**, based on the camera input runs the pattern recognition routines, derives the coordinates and generates instructions to drive the specific light	"[F]rom the above sentences and the inherent knowledge of a person skilled in the art, it's clear that the industry praise is directed to an

the coordinate-specific information;	sources with aimings which will project light at the speaker as the speaker move about the room. **12:5-36** The present invention is in the field of radiation producing devices. More particularly, the present invention is in the technical field of lighting fixtures. However, radiation used for headlamps, heating, night vision, UV or visible light curing, medical X-rays and other radiation uses are covered as well. General lighting fixtures otherwise known as luminaires will be used as the primary example while other irradiating devices such as infrared heaters are covered as well. The invention relates to multiple light source illuminating devices intended to replace incandescent, fluorescent and HID luminaries in general and specialty lighting applications. **52:54-65** Additional features can include an optional very narrow flashlight type of beam. Present day LEDs come in very narrow aimings such as two half angle 8 degrees which may not be narrow enough (a 10 meter spread for 150 meters down the road which may be sufficiently aimed to the right) but with need, smaller angles are also feasible. Such	illuminating device that determines the position of at least one other vehicle". (Ex. OTH-A at ¶107, ¶115).

	a beam at the correct narrow aiming can continue to illuminate far ahead (in high beam) without blinding oncoming traffic. Analysis by a detector or an imaging system of the oncoming vehicles position (using its headlights for example) can be used to determine which exact aiming is the maximum allowable for any given traffic situation and road layout. **95:3-14** There has thus been shown and described, among other things, a multiple-source lighting technology which allows for the design and construction of illuminating devices. Many changes, modifications, variations and other uses and applications of the subject invention will, however, become apparent to those skilled in the art after considering this specification and the accompanying drawings which disclose the preferred embodiments thereof. All such changes, modifications, variations and other uses and applications which do not depart from the spirit and scope of the invention are deemed to be covered by the invention without departing from the spirit or scope of the following claims.	
select a cluster of the LEDs that emit light toward at least a	**45:53-55** The controller **195**, based on the camera input runs the pattern recognition routines,	The new Matrix Beam system combines a front camera, high-performance software

portion of the other vehicle based on the LEDs having emission aimings associated with the first coordinates;	derives the coordinates and generates instructions to drive the specific light sources with aimings which will project light at the speaker as the speaker move about the room. **52:54-65** Additional features can include an optional very narrow flashlight type of beam. Present day LEDs come in very narrow aimings such as two half angle 8 degrees which may not be narrow enough (a 10 meter spread for 150 meters down the road which may be sufficiently aimed to the right) but with need, smaller angles are also feasible. Such a beam at the correct narrow aiming can continue to illuminate far ahead (in high beam) without blinding oncoming traffic. Analysis by a detector or an imaging system of the oncoming vehicles position (using its headlights for example) can be used to determine which exact aiming is the maximum allowable for any given traffic situation and road layout. **1:25-36** The present invention is in the field of radiation producing devices. More particularly, the present invention is in the technical field of lighting fixtures. However, radiation used for headlamps, heating, night	and "intelligent lighting" technology to recognize cars that are being followed as well as oncoming traffic. (Ex. 10 at 1, emphasis added.) The system automatically adjusts a car's headlamps to deliver "glare free" illumination, dimming or switching on and off light sources based on traffic conditions. *Id.* **Individually controlled LEDs also provide two or more dark zones with "light in-between," allowing continuous use of a vehicle's high-beams to maximize visibility and provide a safer driving experience.** *Id.* From the above sentences and the inherent knowledge of a person skilled in the art, “an illuminating device that includes “individually controlled LEDs” necessarily selects the LEDS to be aimed based on the position of the

	vision, UV or visible light curing, medical X-rays and other radiation uses are covered as well. General lighting fixtures otherwise known as luminaires will be used as the primary example while other irradiating devices such as infrared heaters are covered as well. The invention relates to multiple light source illuminating devices intended to replace incandescent, fluorescent and HID luminaries in general and specialty lighting applications. **95:3-14** There has thus been shown and described, among other things, a multiple-source lighting technology which allows for the design and construction of illuminating devices. Many changes, modifications, variations and other uses and applications of the subject invention will, however, become apparent to those skilled in the art after considering this specification and the accompanying drawings which disclose the preferred embodiments thereof. All such changes, modifications, variations and other uses and applications which do not depart from the spirit and scope of the invention are deemed to be covered by the invention without departing from the spirit or scope of the following claims.	detected vehicle, per the *select a cluster* limitation". (Ex. OTH-A at ¶107, ¶116).

change emission of the selected cluster of LEDs relative to emission of other LEDs not included in the cluster to create headlamp illumination that preserves a first level of illumination illuminating past the other vehicle while preventing glare to a driver of the other vehicle.	**45:53-55** The controller **195**, based on the camera input runs the pattern recognition routines, derives the coordinates and generates instructions to drive the specific light sources with aimings which will project light at the speaker as the speaker move about the room. **52:54-65** Additional features can include an optional very narrow flashlight type of beam. Present day LEDs come in very narrow aimings such as two half angle 8 degrees which may not be narrow enough (a 10 meter spread for 150 meters down the road which may be sufficiently aimed to the right) but with need, smaller angles are also feasible. Such a beam at the correct narrow aiming can continue to illuminate far ahead (in high beam) without blinding oncoming traffic. Analysis by a detector or an imaging system of the oncoming vehicles position (using its headlights for example) can be used to determine which exact aiming is the maximum allowable for any given traffic situation and road layout. **1:25-36** The present invention is in the field of radiation producing devices. More	The two-or-more dark zones with 'light in-between' correspond to the "first coordinates" and "preserved area of illumination" to prevent glare to a driver of the other vehicle, which as the article states provides a safer driving experience. (Ex. 10 at 1, emphasis added.) "[F]rom the above sentences it would be clear to a person skilled in the art that the industry praise description of an illuminating device with "two or more dark zones with 'light-in-between" to maximize visibility, corresponds to the above-identified claim limitation, providing reduced illumination in the dark zones relative to the illumination on both sides of the dark zone." *See,* OTH-A at ¶107, ¶117.

	particularly, the present invention is in the technical field of lighting fixtures. However, radiation used for headlamps, heating, night vision, UV or visible light curing, medical X-rays and other radiation uses are covered as well. General lighting fixtures otherwise known as luminaires will be used as the primary example while other irradiating devices such as infrared heaters are covered as well. The invention relates to multiple light source illuminating devices intended to replace incandescent, fluorescent and HID luminaries in general and specialty lighting applications. **95:3-14** There has thus been shown and described, among other things, a multiple-source lighting technology which allows for the design and construction of illuminating devices. Many changes, modifications, variations and other uses and applications of the subject invention will, however, become apparent to those skilled in the art after considering this specification and the accompanying drawings which disclose the preferred embodiments thereof. All such changes, modifications, variations and other uses and applications which do not depart from the spirit and scope of the invention are deemed to be covered by the invention	

	without departing from the spirit or scope of the following claims.	
Claim 32		
An illuminating device having automatic control of light provided to an illuminated area comprising:	**Claim 6 of the '551 Patent**	HELLA "has won the prestigious 2014 Automotive News PACE Award for its industry-first adaptive LED Matrix Beam technology. . . HELLA's "glare-free high-beam" **headlights use individually controlled LEDs that adjust automatically** to real-time traffic conditions to reduce glare for other drivers." (Ex. 10 at 1, emphasis added.) *See* Ex. OTH-A at ¶107-108.
a structure for incorporating illuminating device elements, wherein the structure comprises a motor vehicle;	**Claim 6 of the '551 Patent** **Fig. 15 (bottom):** 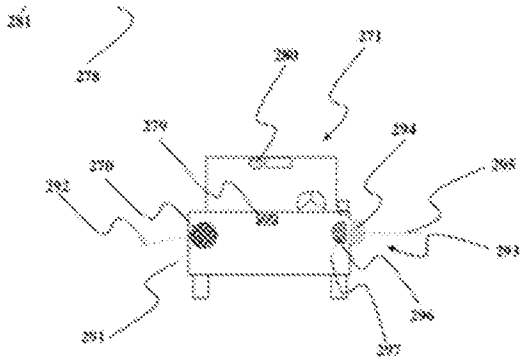	The system automatically adjusts a **car's headlamps** to deliver "glare free" illumination, dimming or switching on and off light sources based on traffic conditions. (Ex. 10, PR Newswire at 1, emphasis added.) *See* Ex. OTH-A at ¶107, ¶109.

	53:45 – 54:47 Thus when following another vehicle, assuming, as drivers have reported, that they find yellow incandescent colored headlamps less offending than the HID blue-white color, the external controller **279** which receives traffic data from sensors **280** … a cluster **281** would be used to illuminate around a corner. Thus when the turn indicator has been selected or the steering wheel has been rotated by the driver, the DLF headlamp is powered by the controller to illuminate sideways at angles which according to the speed of travel is correct. (A driver can't make a 90-degree turn traveling 90 kph but from a stop, the turn may be around a corner.) In a preferred embodiment a multitude of LEDs in **281** are differently aimed in top view **274** showing the top view of the cluster **282** with SLS **283** angled less outwards and SLS **284** angled more outward with the forward aiming (distance ahead of the vehicle) of the more angled SLS **284**, closer in for illuminating sharp turn, than that of the less angled SLS **283** for a shallow curve. Side sectional view **273** shows a general downward aiming with SLSs of front view **272** cluster **285** corresponding to	

	cluster **286** shown from the side. The cluster **286** is the most angled downward such as for a slow driving as in a parking light type of application where the idea is not to cause glare yet be seen. The parking light function can also be done with higher angled LEDs by just lowering the intensity to very low non-glaring intensities. Cluster **287** of the front view would be the main illuminating workhorse and is shown in side view **273** as angled SLSs in cluster **288** and top view **274** as cluster **289**. The top cluster **276** shown in side view **273**, as **290** would perform alone or in tandem with part of **287** the high beam lighting function… In one embodiment the digital headlamp carries out all the functions in a single unit **270**. SLSs have different locations and aimings **291** and **292** to carry out the functions. In another embodiment **293** the spotlight sign illuminating function or corner lighting function is in a separate package **294** with its aiming **295**. The low and high beam lighting is accomplished with fixture **296** and its general aiming **297**. The separate units may be dictated by design or sales considerations and yield more flexibility but are within the scope of the overall integral digital lamp headlight device. The controller **279** will addresses	

	the power supply of each DLF headlamp **270**, **296** and **294** independently such that each lamp performs its functions separately.	
a plurality of individually controllable LEDs incorporated in the structure via at least one headlamp mounted to the structure, each headlamp including at least one of the LEDs, the LEDs in communication with a power source;	**Claim 6 of the '551 patent** **Fig. 15 (bottom):** 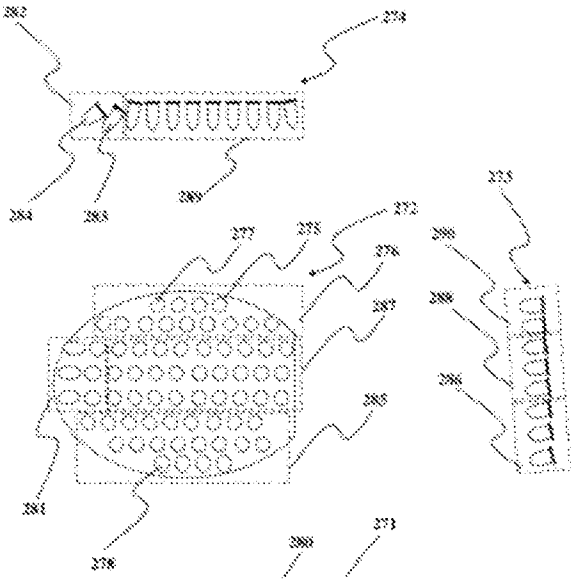 **53:13-37** In FIG. 16 a headlamp **270** of a land, sea or air vehicle **271** is shown in front view **272**, side view of a section **273** and top view of a section **274**. A discreet SLS light source such as an LED **275** with specific location within the cluster **276** has a specific spatial light distribution, color wavelength and aiming relative to the vehicle, such as straight ahead, and or downwards and or off towards the right or left. The SLS may have	HELLA "has won the prestigious 2014 Automotive News PACE Award for its industry-first adaptive LED Matrix Beam technology. . . HELLA's "glare-free high-beam" **headlights use individually controlled LEDs that adjust automatically** to real-time traffic conditions to reduce glare for other drivers" The system automatically adjusts a **car's headlamps** to deliver "glare free" illumination, dimming or switching on and off light sources based on traffic conditions. (Ex. 10 at 1, emphasis added.) A POSITA "would readily understand that such an automatically adjustable system would include

	one junction and be monochromatic or have a many junctions and provide a wide spectral power distribution and the power to the SLS may be varied. An SLS can also be a "white" LED. For example a typical "white" LED such as a Luxeon® white LED such as LXHL-XXXX will have a colder "bluish" 4,500K color temperature. LED **277** at a second location within the same cluster may have a similar or dissimilar aiming, wavelength and spatial light distribution. The concept cluster shown by the dashed lines, is used to describe a control function and is not necessarily related to contiguous placement. In general a cluster may be deemed a separate grouping due to a function it performs, either exclusively or in conjunction with other clusters or sub-clusters, such as high beam function versus a second cluster **278** which may provide a parking light function. The same SLS may be used, albeit at different intensities, for both the above functions and thus clusters may overlap and be discontinuous. **17:3-16** As used herein, the term "light source", LED or "solid state light source" means any system that is capable of receiving an electrical signal and producing light in	individually controllable LEDs in communication with a power source". *See* Ex. OTH-A at ¶107, ¶110.

	response to the signal. Thus, the term "light source" should be understood to include light emitting diodes of all types, light emitting polymers, semiconductor dies that produce or emanate light in response to current, organic LEDs, electro-luminescent strips, and other such systems. Incandescent and discharge light sources are also included and multiples of incandescent and discharge light sources also provide a digital luminaire. In an embodiment, a "light source" may refer to a single light emitting diode package including multiple semiconductor LED dies that are individually controlled.	
electronic circuitry apparatus for the controlled powering of the LEDs and other of the illuminating device elements;	**Claim 6 of the '551 patent**	HELLA "has won the prestigious 2014 Automotive News PACE Award for its industry-first adaptive LED Matrix Beam technology. . . HELLA's "glare-free high-beam" **headlights use individually controlled LEDs that adjust automatically** to real-time traffic conditions to reduce glare for other drivers." (Ex. 10 at 1, emphasis added.) The system automatically adjusts a **car's headlamps** to

		deliver "glare free" illumination, dimming or switching on and off light sources based on traffic conditions. *Id.* From the described functionality, "it's clear that the praise is directed to an illuminating device, including *electronic circuitry apparatus for the controlled powering of the LEDs and other of the illuminating device elements*." (Ex. OTH-A at ¶107, ¶111.)
one or more processors;	**18:23-29** In a preferred embodiment the DLF is provided with an onboard controller. The controller may be a computer board, embedded device, a Digital Signal Processor, etc. In general, the term "logical controller, controller or computer" can be broadly defined to encompass any device having control circuitry or a processor which executes instructions from a memory medium.	
one or more sensors, including one or more cameras, placed on the structure for detecting	**Claim 6 of the '551 patent** **25:34-42**	"The **new Matrix Beam system combines a front camera**, high-performance software and "intelligent

coordinate-specific information about the illuminated area and positioned to capture an image of at least one target, at least one of said cameras in communication with power, and in communication with at least one of the one or more processors;	In a preferred embodiment the DLF contains logic control electronics unit 7. Logic control electronics unit, 7, receives input and/or feedback from motion, intensity and/or spectral sensors **8**, or from manual control button **9** and increases or decreases or turns on or shuts off the power to one or more of the SLS to effect the desired change. That is, the control logic unit 7 has stored parameters for intensity and spectral distribution and operates the MSLS lamp within the predefined range. **25:53-67** Sensors **8** include any of the following: light, temperature and motion detection devices. Two types of optical detection sensors may be used: A photo detector with specific spectral sensitivity to detect a specific color. For example a standard red, blue and green set which would then indicate how "white" the light is. Alternately, a wide spectrum photo detector that irrespective of color measures the intensity of each excited die as it is test fired, based on the eye visual sensitivity curve. The optical sensor may be lensed and capable of forming an image, that is a camera and the detector may be a detector array of photodiode pixels. The detector array may be a CMOS or CCD VSLI array	lighting" technology **to recognize cars that are being followed as well as oncoming traffic**." (Ex. 10 at 1, emphasis added.) "[F]rom this sentence, it's clear to a person skilled in the art that the industry praise is directed to an illuminating device that includes the details of the camera sensor limitation." (Ex. OTH-A at ¶107, ¶112.)

	and may be monochromatic or color as in a monochromatic or digital camera. Such arrays are readily available in mega-pixel resolution.	
a controller, including at least one of the one or more processors, integrated with the structure via mounting, in communication with the LED controlling power electronic circuitry apparatus, said controller arranged to process the information communicated from the cameras and to automatically control the light provided to the illuminated area; and	**Claim 6 of the '551 patent** **25:34-52** In a preferred embodiment the DLF contains logic control electronics unit 7. Logic control electronics unit, 7, receives input and/or feedback from motion, intensity and/or spectral sensors 8, or from manual control button 9 and increases or decreases or turns on or shuts off the power to one or more of the SLS to effect the desired change. That is, the control logic unit 7 has stored parameters for intensity and spectral distribution and operates the MSLS lamp within the predefined range. The control unit may include a DSP or computer with storage media, computer algorithms, signal input and output electronics, analog to digital converters, and communications elements to carry out intensity, distribution, dimming and color balance control. Computer algorithms and instruction sets 7A are induced by the logical controller to manipulate data, calculate results generate output signals and maintain the operating parameters within the specifications. Measured parameters are	A leader in automotive lighting and electronics, HELLA's "glare-free high-beam" headlights use **individually controlled LEDs that adjust automatically to real-time traffic conditions** to reduce glare for other drivers. (Ex. 10 at 1, emphasis added.) **The new Matrix Beam system combines a front camera, high-performance software and "intelligent lighting" technology to recognize cars that are being followed as well as oncoming traffic**. (Ex. 10, at 1, emphasis added.) **The system automatically adjusts a car's headlamps to deliver "glare free" illumination, dimming or switching on and off light**

	checked against the stored parameters and the control circuitry adjusts the power to SLS. **53:48-50** … the external controller **279** which receives traffic data from sensors **280** …	**sources based on traffic conditions**. *Id.* "[F]rom the above sentences, and the inherent knowledge possessed by a person skilled in the art, it's clear that the industry praise is directed to an illuminating device that includes the details of the controller limitation, wherein the controller processes information from the camera". (Ex. OTH-A at ¶107, ¶113.)
memory storing instructions that, when executed by one or more processors of the controller, enable the controller to:	**25:42-50** The control unit may include a DSP or computer with storage media, computer algorithms, signal input and output electronics, analog to digital converters, and communications elements to carry out intensity, distribution, dimming and color balance control. Computer algorithms and instruction sets 7A are induced by the logical controller to manipulate data, calculate results generate output signals and maintain the operating parameters within the specifications. **54:45-47**	The new Matrix Beam system combines a front camera, **high-performance software and "intelligent lighting" technology to recognize cars that are being followed as well as oncoming traffic.** (Ex. 10 at 1, emphasis added.) The system automatically adjusts a car's headlamps to deliver "glare free" illumination, dimming or switching on and off light

	The controller **279** will addresses the power supply of each DLF headlamp **270**, **296** and **294** independently such that each lamp performs its functions separately.	sources based on traffic conditions. *Id.* **Individually controlled LEDs also provide two or more dark zones with "light in-between," allowing continuous use of a vehicle's high-beams to maximize visibility and provide a safer driving experience.** *Id.* "From the above sentences, it's clear that the industry praise is directed to an illuminating device that includes the '*memory storing instructions'* limitation". (Ex. OTH-A at ¶107, ¶114.)
create a beam of diminished illumination illuminating at least a portion of the at least one target with non-glaring illumination, created within a broader field of illumination having different intensity than the beam, by one or more changes to	**52:54 - 53:4** Additional features can include an optional very narrow flashlight type of beam. Present day LEDs come in very narrow aimings such as two half angle 8 degrees which may not be narrow enough (a 10 meter spread for 150 meters down the road which may be sufficiently aimed to the right) but with need, smaller angles are also feasible. Such a beam at the correct narrow aiming can continue to illuminate far ahead (in high beam) without blinding oncoming traffic.	

characteristics of first light of a cluster of the LEDs providing the first light directed at the at least a portion and creating the beam, the beam diminished in intensity relative to the broader field of illumination illuminating at least above and on both sides of the beam; and	Analysis by a detector or an imaging system of the oncoming vehicles position (using its headlights for example) can be used to determine which exact aiming is the maximum allowable for any given traffic situation and road layout. Using color and pattern recognition techniques it is possible to determine what is a sign. It is then possible to provide the equivalent of "task lighting" and use the controller and properly aimed SLS to follow and illuminate distant overhead and roadside signs for a longer time, yet not blind oncoming traffic due to the narrow beam. **22:14-22** In a DLF it is possible to combine a task light having a very narrow "spot" beam at the correct aiming with a general area lighting "flood" beam into one fixture. The digital lighting fixture is positioned according to recommended lighting practice near a workstation and correctly oriented such that the DLF gives a wide (though still controlled, so as not to cause glare on a computer display) general illumination distribution as well as a narrow distribution aimed at the desktop for high intensity task lighting.	

	22:26-48 In another example of prior art practice a table lamp for reading is provided with a shade. The shade is there to partially redirect the light onto the book and also prevent direct, glaring, rays from the lamp used for general lighting from reaching the reader's eyes. According to the present invention, instead of having a glaring lamp producing light which is then made non-glaring by a shade at a loss in excess of 50% the LF is built such the amounts of light directed downward at useful angles and the amount of light directed upward are in the correct ratio. The surface area, from which discomfort-glare causing rays exit, is designed such that the luminous exitance is within recommended UGR levels for home use. The fixture has no need for a shade to protect from glare; the glare was never produced at those angles to begin with due to proper geometric design. To get the desired luminous exitance expressed in terms of lumen per sq. meter or luminance in terms of candela per sq. meter, the light exiting the source of specific intensity at angles which normally reach the room occupant's eyes, is spread over an area such that the exiting light is non-glaring. These lighting design parameters serve as the product specification and are incorporated	

	into the initial design. There is no need to add on components to achieve correct lighting. **45:27-44** In a further ADLF intelligent lighting system improvement over prior-art practice, machine vision is used to control surrounding luminance. A prime example is an office application where a computer Visual Display Terminal is in use. This is an application where the quality of the localized task lighting is important. Contrast plays a major role in seeing and glare plays a role in producing veiling reflections as causing fatigue. The correct illuminating solution involves the control of surrounding luminances. A prior art workstation design will include partition, carpet, ceiling and desk surface reflectance which reduce the luminance in the workers field of view. Using the ADLFs ability to recognize the computer screen chair, desk and surrounding floor and ceiling, the illuminance in lux on each element is varied to obtain the optimal luminance. That now allows any color scheme to be used by the interior designer on the work cell decor. The ADLF will control the luminance by varying the spatial light intensity distribution over the different surfaces.	

	1:25-36 The present invention is in the field of radiation producing devices. More particularly, the present invention is in the technical field of lighting fixtures. However, radiation used for headlamps, heating, night vision, UV or visible light curing, medical X-rays and other radiation uses are covered as well. General lighting fixtures otherwise known as luminaires will be used as the primary example while other irradiating devices such as infrared heaters are covered as well. The invention relates to multiple light source illuminating devices intended to replace incandescent, fluorescent and HID luminaries in general and specialty lighting applications. **95:3-14** There has thus been shown and described, among other things, a multiple-source lighting technology which allows for the design and construction of illuminating devices. Many changes, modifications, variations and other uses and applications of the subject invention will, however, become apparent to those skilled in the art after considering this specification and the accompanying drawings which disclose the preferred embodiments thereof. All such	

	changes, modifications, variations and other uses and applications which do not depart from the spirit and scope of the invention are deemed to be covered by the invention without departing from the spirit or scope of the following claims.	
follow, based at least in part on data from one or more of the cameras, the at least one target with the diminished illumination as the at least one target changes location relative to the motor vehicle.	**45:45-67** In another embodiment using the camera **197**, the controller **195** is instructed to identify and track a roving speaker during a video presentation. A signaling device is used by the speaker to allow the pattern recognition program to initially lock-on and recognize a target attribute as is known in the art of object tracking. The signaling device can be a laser light pointer **202** aimed at the camera or a hand held remote control **201** in communication with the camera vision system. The controller **195**, based on the camera input runs the pattern recognition routines, derives the coordinates and generates instructions to drive the specific light sources with aimings which will project light at the speaker as the speaker move about the room. It is to be understood that in a theater lighting application there is no need for a preprogrammed moving light using motors to change position. Instead a fixed DLF or ADLF with multiple light	"The **new Matrix Beam system combines a front camera**, high-performance software and "intelligent lighting" technology **to recognize cars that are being followed as well as oncoming traffic**." (Ex. 10, at 1, emphasis added.) **Individually controlled LEDs also provide two or more dark zones with "light in-between," allowing continuous use of a vehicle's high-beams to maximize visibility and provide a safer driving experience.** *Id* A POSITA would readily understand that the high performance software that successfully recognized cars that are being followed,

	sources powers the necessary light sources to illuminate the performer as he or she moves about the stage. This actually is similar to the banks of shuttered lights used in present day stage lighting. Only now the digital aspect of discrete multiple light sources allowing for a smooth transition of aimings with instantaneous control of almost infinite variation of spectrum and intensity is accomplished. **51:59-65** Additional features include an optional concentrated flashlight type of beam to illuminate distant overhead and roadside signs, which due to the narrow directed beam will not blind oncoming traffic. Image recognition via a camera will allow the beam to follow the retroreflective sign as the vehicle moves or the signs will be provided with a special marker for this purpose. **1:25-36** The present invention is in the field of radiation producing devices. More particularly, the present invention is in the technical field of lighting fixtures. However, radiation used for headlamps, heating, night vision, UV or visible light curing, medical X-rays and other radiation uses are covered	would necessarily follow the target to result in the "dark zones". (Ex. OTH-A at ¶107, ¶115, ¶117.)

	as well. General lighting fixtures otherwise known as luminaires will be used as the primary example while other irradiating devices such as infrared heaters are covered as well. The invention relates to multiple light source illuminating devices intended to replace incandescent, fluorescent and HID luminaries in general and specialty lighting applications. **95:3-14** There has thus been shown and described, among other things, a multiple-source lighting technology which allows for the design and construction of illuminating devices. Many changes, modifications, variations and other uses and applications of the subject invention will, however, become apparent to those skilled in the art after considering this specification and the accompanying drawings which disclose the preferred embodiments thereof. All such changes, modifications, variations and other uses and applications which do not depart from the spirit and scope of the invention are deemed to be covered by the invention without departing from the spirit or scope of the following claims.	
Claim 56		

An illuminating device having automatic control of light provided to an illuminated area comprising:	**Claim 6 of the '551 Patent**	HELLA "has won the prestigious 2014 Automotive News PACE Award for its industry-first adaptive LED Matrix Beam technology. . . HELLA's "glare-free high-beam" **headlights use individually controlled LEDs that adjust automatically** to real-time traffic conditions to reduce glare for other drivers" (Ex. 10 at 1, emphasis added.) *See* OTH-A at ¶107-¶108
a structure for incorporating illuminating device elements, wherein the structure comprises a motor vehicle;	**Claim 6 of the '551 Patent** **Fig. 15 (bottom):** 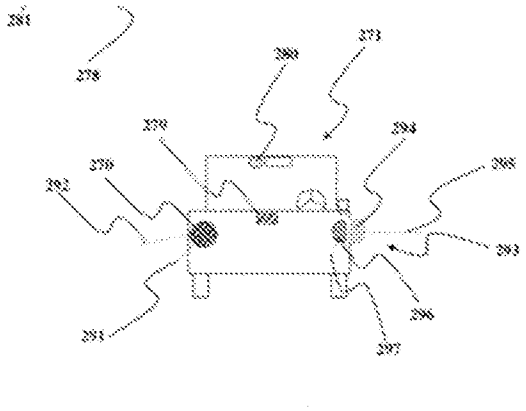 **53:45 – 54:47**	The system automatically adjusts a **car's headlamps** to deliver "glare free" illumination, dimming or switching on and off light sources based on traffic conditions. (Ex. 10at1, emphasis added.) *See* Ex. OTH-A at ¶107, ¶109

	Thus when following another vehicle, assuming, as drivers have reported, that they find yellow incandescent colored headlamps less offending than the HID blue-white color, the external controller **279** which receives traffic data from sensors **280** … a cluster **281** would be used to illuminate around a corner. Thus when the turn indicator has been selected or the steering wheel has been rotated by the driver, the DLF headlamp is powered by the controller to illuminate sideways at angles which according to the speed of travel is correct. (A driver can't make a 90-degree turn traveling 90 kph but from a stop, the turn may be around a corner.) In a preferred embodiment a multitude of LEDs in **281** are differently aimed in top view **274** showing the top view of the cluster **282** with SLS **283** angled less outwards and SLS **284** angled more outward with the forward aiming (distance ahead of the vehicle) of the more angled SLS **284**, closer in for illuminating sharp turn, than that of the less angled SLS **283** for a shallow curve. Side sectional view **273** shows a general downward aiming with SLSs of front view **272** cluster **285** corresponding to cluster **286** shown from the side. The cluster **286** is the most angled downward such as for a slow driving as in a parking	

	light type of application where the idea is not to cause glare yet be seen. The parking light function can also be done with higher angled LEDs by just lowering the intensity to very low non-glaring intensities. Cluster **287** of the front view would be the main illuminating workhorse and is shown in side view **273** as angled SLSs in cluster **288** and top view **274** as cluster **289**. The top cluster **276** shown in side view **273**, as **290** would perform alone or in tandem with part of **287** the high beam lighting function… In one embodiment the digital headlamp carries out all the functions in a single unit **270**. SLSs have different locations and aimings **291** and **292** to carry out the functions. In another embodiment **293** the spotlight sign illuminating function or corner lighting function is in a separate package **294** with its aiming **295**. The low and high beam lighting is accomplished with fixture **296** and its general aiming **297**. The separate units may be dictated by design or sales considerations and yield more flexibility but are within the scope of the overall integral digital lamp headlight device. The controller **279** will addresses the power supply of each DLF headlamp **270**, **296** and **294** independently	

	such that each lamp performs its functions separately.	
a plurality of individually controllable LEDs incorporated in the structure via at least one headlamp mounted to the structure, each headlamp including at least one of the LEDs, the LEDs in communication with a power source;	**Claim 6 of the '551 patent** **Fig. 15 (top):** 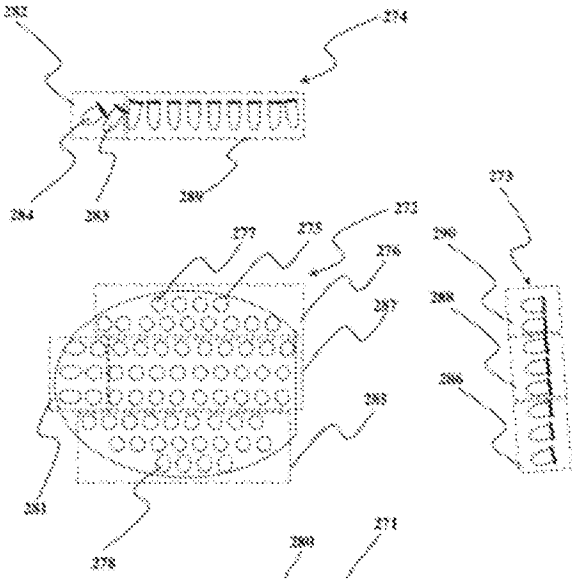 **53:13-37** In FIG. 16 a headlamp **270** of a land, sea or air vehicle **271** is shown in front view **272**, side view of a section **273** and top view of a section **274**. A discreet SLS light source such as an LED **275** with specific location within the cluster **276** has a specific spatial light distribution, color wavelength and aiming relative to the vehicle, such as straight ahead, and or downwards and or off towards the right or left. The SLS may have one junction and be monochromatic or have a many junctions and provide a wide	HELLA "has won the prestigious 2014 Automotive News PACE Award for its industry-first adaptive LED Matrix Beam technology. . . HELLA's "glare-free high-beam" **headlights use individually controlled LEDs that adjust automatically** to real-time traffic conditions to reduce glare for other drivers." (Ex. 10 at 1, emphasis added.) The system automatically adjusts a **car's headlamps** to deliver "glare free" illumination, dimming or switching on and off light sources based on traffic conditions. *Id.* A POSITA "would readily understand that such an automatically adjustable system would include individually controllable

	spectral power distribution and the power to the SLS may be varied. An SLS can also be a "white" LED. For example a typical "white" LED such as a Luxeon® white LED such as LXHL-XXXX will have a colder "bluish" 4,500K color temperature. LED **277** at a second location within the same cluster may have a similar or dissimilar aiming, wavelength and spatial light distribution. The concept cluster shown by the dashed lines, is used to describe a control function and is not necessarily related to contiguous placement. In general a cluster may be deemed a separate grouping due to a function it performs, either exclusively or in conjunction with other clusters or sub-clusters, such as high beam function versus a second cluster **278** which may provide a parking light function. The same SLS may be used, albeit at different intensities, for both the above functions and thus clusters may overlap and be discontinuous. **17:3-16** As used herein, the term "light source", LED or "solid state light source" means any system that is capable of receiving an electrical signal and producing light in response to the signal. Thus, the term "light source" should be understood to include	LEDs in communication with a power source". *See* Ex. OTH-A at ¶107, 110.

	light emitting diodes of all types, light emitting polymers, semiconductor dies that produce or emanate light in response to current, organic LEDs, electro-luminescent strips, and other such systems. Incandescent and discharge light sources are also included and multiples of incandescent and discharge light sources also provide a digital luminaire. In an embodiment, a "light source" may refer to a single light emitting diode package including multiple semiconductor LED dies that are individually controlled.	
electronic circuitry apparatus for the controlled powering of the LEDs and other of the illuminating device elements;	**Claim 6 of the '551 patent**	HELLA "has won the prestigious 2014 Automotive News PACE Award for its industry-first adaptive LED Matrix Beam technology. . . HELLA's "glare-free high-beam" **headlights use individually controlled LEDs that adjust automatically** to real-time traffic conditions to reduce glare for other drivers." (Ex. 10 at 1, emphasis added. 1.) The system automatically adjusts a **car's headlamps** to deliver "glare free" illumination, dimming or

		switching on and off light sources based on traffic conditions. *Id.* From the described functionality, "it's clear that the praise is directed to an illuminating device, including *electronic circuitry apparatus for the controlled powering of the LEDs and other of the illuminating device elements"*. (Ex. OTH-A at ¶107, ¶111.)
one or more processors;	**18:23-29** In a preferred embodiment the DLF is provided with an onboard controller. The controller may be a computer board, embedded device, a Digital Signal Processor, etc. In general, the term "logical controller, controller or computer" can be broadly defined to encompass any device having control circuitry or a processor which executes instructions from a memory medium.	
one or more sensors, including one or more cameras, placed on the structure for detecting coordinate-specific information about the	**Claim 6 of the '551 patent** **25:34-42** In a preferred embodiment the DLF contains logic control electronics unit 7. Logic control electronics unit, 7, receives	"The **new Matrix Beam system combines a front camera**, high-performance software and "intelligent lighting" technology **to recognize cars that are**

illuminated area and positioned to capture an image of at least one other vehicle ahead of the motor vehicle, at least one of said cameras in communication with power, and in communication with at least one of the one or more processors;	input and/or feedback from motion, intensity and/or spectral sensors **8**, or from manual control button **9** and increases or decreases or turns on or shuts off the power to one or more of the SLS to effect the desired change. That is, the control logic unit 7 has stored parameters for intensity and spectral distribution and operates the MSLS lamp within the predefined range. **25:53-67** Sensors **8** include any of the following: light, temperature and motion detection devices. Two types of optical detection sensors may be used: A photo detector with specific spectral sensitivity to detect a specific color. For example a standard red, blue and green set which would then indicate how "white" the light is. Alternately, a wide spectrum photo detector that irrespective of color measures the intensity of each excited die as it is test fired, based on the eye visual sensitivity curve. The optical sensor may be lensed and capable of forming an image, that is a camera and the detector may be a detector array of photodiode pixels. The detector array may be a CMOS or CCD VSLI array and may be monochromatic or color as in a monochromatic or digital camera. Such	**being followed as well as oncoming traffic**." (Ex. 10, at 1, emphasis added.) "[F]rom this sentence, it's clear to a person skilled in the art that the industry praise is directed to an illuminating device that includes the details of the camera sensor limitation." (Ex. OTH-A at ¶107, ¶112.)

	arrays are readily available in mega-pixel resolution.	
a controller, including at least one of the one or more processors, integrated with the structure via mounting, in communication with the LED controlling power electronic circuitry apparatus, said controller arranged to process the information communicated from the cameras and to automatically control the light provided to the illuminated area; and	**Claim 6 of the '551 patent** **25:34-52** In a preferred embodiment the DLF contains logic control electronics unit 7. Logic control electronics unit, 7, receives input and/or feedback from motion, intensity and/or spectral sensors **8**, or from manual control button **9** and increases or decreases or turns on or shuts off the power to one or more of the SLS to effect the desired change. That is, the control logic unit 7 has stored parameters for intensity and spectral distribution and operates the MSLS lamp within the predefined range. The control unit may include a DSP or computer with storage media, computer algorithms, signal input and output electronics, analog to digital converters, and communications elements to carry out intensity, distribution, dimming and color balance control. Computer algorithms and instruction sets 7A are induced by the logical controller to manipulate data, calculate results generate output signals and maintain the operating parameters within the specifications. Measured parameters are checked against the stored parameters and	A leader in automotive lighting and electronics, HELLA's "glare-free high-beam" headlights use **individually controlled LEDs that adjust automatically to real-time traffic conditions** to reduce glare for other drivers. (Ex. 10 at 1, emphasis added.) **The new Matrix Beam system combines a front camera, high-performance software and "intelligent lighting" technology to recognize cars that are being followed as well as oncoming traffic.** *Id.* **The system automatically adjusts a car's headlamps to deliver "glare free" illumination, dimming or switching on and off light sources based on traffic conditions**." *Id.*

	the control circuitry adjusts the power to SLS. **53:48-50** … the external controller **279** which receives traffic data from sensors **280** …	"From the above sentences, and the inherent knowledge possessed by a person skilled in the art, it's clear that the industry praise is directed to an illuminating device that includes the details of the controller limitation, wherein the controller processes information from the camera." (Ex. OTH-A at ¶107, ¶113.)
memory storing instructions that, when executed by one or more processors of the controller, enable the controller to:	**25:42-50** The control unit may include a DSP or computer with storage media, computer algorithms, signal input and output electronics, analog to digital converters, and communications elements to carry out intensity, distribution, dimming and color balance control. Computer algorithms and instruction sets 7A are induced by the logical controller to manipulate data, calculate results generate output signals and maintain the operating parameters within the specifications. **54:45-47** The controller **279** will addresses the power supply of each DLF headlamp **270**, **296** and **294** independently	The new Matrix Beam system combines a front camera, high-performance software and "intelligent lighting" technology to recognize cars that are being followed as well as oncoming traffic. (Ex. 10 at 1, emphasis added.) The system automatically adjusts a car's headlamps to deliver "glare free" illumination, dimming or switching on and off light sources based on traffic conditions. *Id.* **Individually controlled LEDs also provide two or**

	such that each lamp performs its functions separately.	**more dark zones with "light in-between," allowing continuous use of a vehicle's high-beams to maximize visibility and provide a safer driving experience.** (Ex. 10 at 1, emphasis added.) "From the above sentences and the inherent knowledge of a person skilled in the art, in order to implement the 'high performance software' it's clear that *memory storing instructions* would necessarily be provided." (Ex. OTH-A at ¶107, ¶114).
determine, based on data from one or more of the sensors, a vertical and horizontal position associated with the at least one other vehicle;	52:27-42 A possible control system for such purposes is described in U.S. Pat. No. 6,281,632 by Stam, et-al from Aug. 28, 2001 titled: A Continuously variable headlamp control incorporated herein by reference. The patent describes how continuously variable headlamps offer greater flexibility for roadway illumination but offer challenges in automatic control design. Each continuously variable headlamp has an effective illumination range varied by changing at least one parameter from a set including	The new Matrix Beam system combines a front camera, high-performance software and "intelligent lighting" technology to recognize cars that are being followed as well as oncoming traffic. (Ex. 10 at 1, emphasis added.) The system automatically adjusts a car's headlamps to deliver "glare free" illumination, dimming or

	horizontal direction aimed, vertical direction aimed, and intensity emitted. Stam discloses a system for automatically controlling continuously variable headlamps on a controlled vehicle includes an imaging system capable of determining lateral and elevational locations of headlamps from oncoming vehicles and tail lamps from leading vehicles.	switching on and off light sources based on traffic conditions. *Id.* **Individually controlled LEDs also provide two or more dark zones with "light in-between," allowing continuous use of a vehicle's high-beams to maximize visibility and provide a safer driving experience.** *Id.* "[F]rom the above sentences and the inherent knowledge of a person skilled in the art, it's clear that the industry praise is directed to an illuminating device that determines the position of at least one other vehicle." (Ex. OTH-A at ¶107, ¶115).
select a first cluster of the LEDs based at least in part on at least one of the vertical and horizontal position compared to known aimings of light associated with the first cluster; and	52:27-42 A possible control system for such purposes is described in U.S. Pat. No. 6,281,632 by Stam, et-al from Aug. 28, 2001 titled: A Continuously variable headlamp control incorporated herein by reference. The patent describes how continuously variable headlamps offer greater flexibility for roadway illumination but offer challenges in	The new Matrix Beam system combines a front camera, high-performance software and "intelligent lighting" technology to recognize cars that are being followed as well as oncoming traffic. (Ex. 10 at 1, emphasis added.)

	automatic control design. Each continuously variable headlamp has an effective illumination range varied by changing at least one parameter from a set including horizontal direction aimed, vertical direction aimed, and intensity emitted. Stam discloses a system for automatically controlling continuously variable headlamps on a controlled vehicle includes an imaging system capable of determining lateral and elevational locations of headlamps from oncoming vehicles and tail lamps from leading vehicles. **52:62 – 53:4** Analysis by a detector or an imaging system of the oncoming vehicles position (using its headlights for example) can be used to determine which exact aiming is the maximum allowable for any given traffic situation and road layout. Using color and pattern recognition techniques it is possible to determine what is a sign. It is then possible to provide the equivalent of "task lighting" and use the controller and properly aimed SLS to follow and illuminate distant overhead and roadside signs for a longer time, yet not blind oncoming traffic due to the narrow beam.	The system automatically adjusts a car's headlamps to deliver "glare free" illumination, dimming or switching on and off light sources based on traffic conditions. *Id.* **Individually controlled LEDs also provide two or more dark zones with "light in-between," allowing continuous use of a vehicle's high-beams to maximize visibility and provide a safer driving experience.** *Id.* "It is my opinion that, from the above sentences and the inherent knowledge of a person skilled in the art, an illuminating device that includes 'individually controlled LEDs' necessarily selects the LEDS to be aimed based on the position of the detected vehicle, per the *select a cluster* limitation." (Ex. OTH-A at ¶107, ¶116).

	45:52-57 The controller **195**, based on the camera input runs the pattern recognition routines, derives the coordinates and generates instructions to drive the specific light sources with aimings which will project light at the speaker as the speaker move about the room. **19:17-30** The basis of the invention is the use of a multitude of discrete light emitting sources ("digits") to generate light. The light control elements can be applied on a per junction basis or on a "white" color generating set grouping such as RGB or on a larger set which may be convenient for manufacturing or other color rendering considerations. The requirement for controllability is however, that the SLS output is definitive in relation to spectrum and spatial distribution. The discrete light emitting elements by operating and not operating, at full power or at a fraction of, either partially or in unison, generate light with optimal intensity, spectral distribution, and spatial distribution of intensity and spectral distribution for the viewing task at hand.	

	53:13-37 In FIG. 16 a headlamp **270** of a land, sea or air vehicle **271** is shown in front view **272**, side view of a section **273** and top view of a section **274**. A discreet SLS light source such as an LED **275** with specific location within the cluster **276** has a specific spatial light distribution, color wavelength and aiming relative to the vehicle, such as straight ahead, and or downwards and or off towards the right or left. The SLS may have one junction and be monochromatic or have a many junctions and provide a wide spectral power distribution and the power to the SLS may be varied. An SLS can also be a "white" LED. For example a typical "white" LED such as a Luxeon® white LED such as LXHL-XXXX will have a colder "bluish" 4,500K color temperature. LED **277** at a second location within the same cluster may have a similar or dissimilar aiming, wavelength and spatial light distribution. The concept cluster shown by the dashed lines, is used to describe a control function and is not necessarily related to contiguous placement. In general a cluster may be deemed a separate grouping due to a function it performs, either exclusively or in conjunction with other clusters or sub-clusters, such as high beam function versus	

	a second cluster **278** which may provide a parking light function. The same SLS may be used, albeit at different intensities, for both the above functions and thus clusters may overlap and be discontinuous. **1:25-36** The present invention is in the field of radiation producing devices. More particularly, the present invention is in the technical field of lighting fixtures. However, radiation used for headlamps, heating, night vision, UV or visible light curing, medical X-rays and other radiation uses are covered as well. General lighting fixtures otherwise known as luminaires will be used as the primary example while other irradiating devices such as infrared heaters are covered as well. The invention relates to multiple light source illuminating devices intended to replace incandescent, fluorescent and HID luminaries in general and specialty lighting applications. **95:3-14** There has thus been shown and described, among other things, a multiple-source lighting technology which allows for the design and construction of illuminating devices. Many changes, modifications, variations and other uses and applications of	

	the subject invention will, however, become apparent to those skilled in the art after considering this specification and the accompanying drawings which disclose the preferred embodiments thereof. All such changes, modifications, variations and other uses and applications which do not depart from the spirit and scope of the invention are deemed to be covered by the invention without departing from the spirit or scope of the following claims.	
reduce intensity of illumination to non-glaring illumination of a first area associated with the at least one other vehicle, relative to intensity of illumination on both sides of the first area at elevations common with the first area illuminated by a second cluster of the LEDs, by control of emission from the first cluster.	**50:37-56** The digital lighting concept is extended to transportation vehicle applications. A headlamp for an automobile uses multiple light sources based on electro luminescence of semiconductor junctions. The proposed unique approach is to combine the lighting engineering function i.e. the correct light distribution, color spectrum and level necessary for the visual task at hand into the lamp such that the digital lamp obviates the need for additional light controls and fixtures. The digital electronic lamp utilizes ⅓ the energy and has over 100,000 hours lifetime versus 2000 for an automotive incandescent lamp and can be rapidly switched on and off without deleteriously affecting lifetime. (Quite the opposite, off time is not part of the lifetime). The	The new Matrix Beam system combines a front camera, high-performance software and "intelligent lighting" technology to recognize cars that are being followed as well as oncoming traffic. (Ex. 10 at 1, emphasis added.) The system automatically adjusts a car's headlamps to deliver "glare free" illumination, dimming or switching on and off light sources based on traffic conditions. *Id.* **Individually controlled LEDs also provide two or**

	multiple light-source, digital device, is an electronic headlight which provides the driver with the correct aiming, illumination level and distribution (e.g. parking lights, low beam, high beam, lighting around curves and corners) based on input from the vehicle's speed, steering wheel position, turn signal indicator and detection of approaching headlights. **52:54 - 53:4** Additional features can include an optional very narrow flashlight type of beam. Present day LEDs come in very narrow aimings such as two half angle 8 degrees which may not be narrow enough (a 10 meter spread for 150 meters down the road which may be sufficiently aimed to the right) but with need, smaller angles are also feasible. Such a beam at the correct narrow aiming can continue to illuminate far ahead (in high beam) without blinding oncoming traffic. Analysis by a detector or an imaging system of the oncoming vehicles position (using its headlights for example) can be used to determine which exact aiming is the maximum allowable for any given traffic situation and road layout. Using color and pattern recognition techniques it is possible to determine what	**more dark zones with "light in-between," allowing continuous use of a vehicle's high-beams to maximize visibility and provide a safer driving experience.** *Id.* "[F]rom the above sentences, it would be clear to a person skilled in the art that the industry praise description of an illuminating device with "two or more dark zones with 'light-in-between" to maximize visibility, corresponds to the above-identified claim limitation, providing reduced illumination in the dark zones relative to the illumination on both sides of the dark zone." (Ex. OTH-A at ¶107, 117.)

	is a sign. It is then possible to provide the equivalent of "task lighting" and use the controller and properly aimed SLS to follow and illuminate distant overhead and roadside signs for a longer time, yet not blind oncoming traffic due to the narrow beam. **22:14-22** In a DLF it is possible to combine a task light having a very narrow "spot" beam at the correct aiming with a general area lighting "flood" beam into one fixture. The digital lighting fixture is positioned according to recommended lighting practice near a workstation and correctly oriented such that the DLF gives a wide (though still controlled, so as not to cause glare on a computer display) general illumination distribution as well as a narrow distribution aimed at the desktop for high intensity task lighting. **45:27-44** In a further ADLF intelligent lighting system improvement over prior-art practice, machine vision is used to control surrounding luminance. A prime example is an office application where a computer Visual Display Terminal is in use. This is an application where the quality of the	

	localized task lighting is important. Contrast plays a major role in seeing and glare plays a role in producing veiling reflections as causing fatigue. The correct illuminating solution involves the control of surrounding luminances. A prior art workstation design will include partition, carpet, ceiling and desk surface reflectance which reduce the luminance in the workers field of view. Using the ADLFs ability to recognize the computer screen chair, desk and surrounding floor and ceiling, the illuminance in lux on each element is varied to obtain the optimal luminance. That now allows any color scheme to be used by the interior designer on the work cell decor. The ADLF will control the luminance by varying the spatial light intensity distribution over the different surfaces. **1:25-36** The present invention is in the field of radiation producing devices. More particularly, the present invention is in the technical field of lighting fixtures. However, radiation used for headlamps, heating, night vision, UV or visible light curing, medical X-rays and other radiation uses are covered as well. General lighting fixtures otherwise known as luminaires will be used as the primary example while other irradiating	

	devices such as infrared heaters are covered as well. The invention relates to multiple light source illuminating devices intended to replace incandescent, fluorescent and HID luminaries in general and specialty lighting applications. **95:3-14** There has thus been shown and described, among other things, a multiple-source lighting technology which allows for the design and construction of illuminating devices. Many changes, modifications, variations and other uses and applications of the subject invention will, however, become apparent to those skilled in the art after considering this specification and the accompanying drawings which disclose the preferred embodiments thereof. All such changes, modifications, variations and other uses and applications which do not depart from the spirit and scope of the invention are deemed to be covered by the invention without departing from the spirit or scope of the following claims.	

Exhibit OTH-F
Side by Side Claim Comparison

Claim 6	Claim 24	Claim 32	Claim 40	Claim 48	Claim 56	Claim 64	Claim 72	Claim 80
An illuminating device having automatic control of the light provided to an illuminated area comprising:	*24. (New) An illuminating device having automatic control of light provided to an illuminated area comprising:*	*32. (New) An illuminating device having automatic control of light provided to an illuminated area comprising:*	*40. (New) An illuminating device having automatic control of light provided to an illuminated area comprising:*	*48. (New) An illuminating device having automatic control of light provided to an illuminated area comprising:*	*56. (New) An illuminating device having automatic control of light provided to an illuminated area comprising:*	*64. (New) An illuminating device having automatic control of light provided to an illuminated area comprising:*	*72. (New) An illuminating device having automatic control of the light provided to an illuminated area comprising:*	*80. (New) An illuminating device having automatic control of light provided to an illuminated area comprising:*
a structure for incorporating illuminating device elements;	*a structure for incorporating illuminating device elements, wherein the structure comprises a motor vehicle;*	*a structure for incorporating illuminating device elements, wherein the structure comprises a motor vehicle;*	*a structure for incorporating illuminating device elements, wherein the structure comprises a motor vehicle;*	*a structure for incorporating illuminating device elements, wherein the structure comprises a motor vehicle;*	*a structure for incorporating illuminating device elements, wherein the structure comprises a motor vehicle;*	*a structure for incorporating illuminating device elements, wherein the structure comprises a motor vehicle;*	*a structure for incorporating illuminating device elements, wherein the structure comprises a motor vehicle;*	*a structure for incorporating illuminating device elements, wherein the structure comprises a motor vehicle;*
one or more light sources incorpo	*a plurality of individually*	*a plurality of individually*	*a plurality of individually*	*a plurality of individually*	*a plurality of individually*	*a plurality of individually*	*a plurality of individually*	*a plurality of individually*

rated in the structure and in communication with a power source;	controllable LEDs light sources incorporated in the structure via at least one headlamp mounted to the structure, each headlamp including at least one of the LEDs, the LEDs in communication with a power source;	controllable LEDs incorporated in the structure via at least one headlamp mounted to the structure, each headlamp including at least one of the LEDs, the LEDs in communication with a power source;	controllable LEDs incorporated in the structure via at least one headlamp mounted to the structure, each headlamp including at least one of the LEDs, the LEDs in communication with a power source;	controllable LEDs incorporated in the structure via at least one headlamp mounted to the structure, each headlamp including at least one of the LEDs, the LEDs in communication with a power source;	controllable LEDs incorporated in the structure via at least one headlamp mounted to the structure, each headlamp including at least one of the LEDs, the LEDs in communication with a power source;	controllable LEDs incorporated in the structure via at least one headlamp mounted to the structure, each headlamp including at least one of the LEDs and in communication with a power source;	controllable LEDs incorporated in the structure via at least one headlamp mounted to the structure, each headlamp including at least one of the LEDs, the LEDs in communication with a power source;	controllable LEDs incorporated in the structure via at least one headlamp mounted to the structure, each headlamp including at least one of the LEDs, the LEDs in communication with a power source;
electronic circuitry apparatus for the controlled powering of the light	electronic circuitry apparatus for the controlled powering of the light	electronic circuitry apparatus for the controlled powering of the LEDs	electronic circuitry apparatus for the controlled powering of the LEDs	electronic circuitry apparatus for the controlled powering of the LEDs	electronic circuitry apparatus for the controlled powering of the LEDs	electronic circuitry apparatus for the controlled powering of the LEDs	electronic circuitry apparatus for the controlled powering of the LEDs	electronic circuitry apparatus for the controlled powering of the LEDs

source and other illuminating device elements;	*source LEDs and other of the illuminating device elements;*	*and other of the illuminating device elements;*	*and other of the illuminating device elements;*	*and other of the illuminating device elements;*	*and other of the illuminating device elements;*	*and other of the illuminating device elements;*	*and other elements of the illuminating device elements;*	*and other of the illuminating device elements;*
	one or more processors;	*one or more processors;*	*one or more processors;*	*one or more processors;*	*one or more processors;*	*one or more processors;*	*one or more processors;*	*one or more processors;*
one or more cameras placed on the structure for detecting coordinate-specific information about the illuminated area, said camera in communication with power and control device	*one or more sensors, including one or more cameras, placed on the structure for detecting coordinate-specific information about the illuminated area, at least one of said cameras in communication*	*one or more sensors, including one or more cameras, placed on the structure for detecting coordinate-specific information about the illuminated area and positioned to capture an image of at least*	*one or more sensors, including one or more cameras, placed on the structure for detecting coordinate-specific information about the illuminated area and positioned to capture an image of at least*	*one or more sensors, including one or more cameras, placed on the structure for detecting coordinate-specific information about the illuminated area, at least one of said cameras in communication*	*one or more sensors, including one or more cameras, placed on the structure for detecting coordinate-specific information about the illuminated area and positioned to capture an image of at least*	*one or more sensors, including one or more cameras, placed on the structure for detecting coordinate-specific information about the illuminated area and positioned to capture an image of another*	*one or more sensors, including one or more cameras, placed on the structure for detecting coordinate-specific information about the illuminated area, at least one of said cameras in communication*	*one or more sensors, including one or more cameras, placed on the structure for detecting coordinate-specific information about the illuminated area and positioned to capture camera data indicating a*

elements;	*with power, and in communication with at least one of the one or more processors;*	*one target, at least one of said cameras in communication with power, and in communication with at least one of the one or more processors;*	*two other vehicles, at least one of said cameras in communication with power, and in communication with at least one of the one or more processors;*	*with power, and in communication with at least one of the one or more processors;*	*one other vehicle ahead of the motor vehicle, at least one of said cameras in communication with power, and in communication with at least one of the one or more processors;*	*vehicle, at least one of said cameras in communication with power, and in communication with at least one of the one or more processors;*	*with power, and in communication with at least one of the one or more processors;*	*target ahead of the motor vehicle, at least one of said cameras in communication with power, and in communication with at least one of the one or more processors;*
a controller integrated with the structure, in communication with the light source controlling power circuitry, said controll	*a controller, including at least one of the one or more processors, integrated with the structure via mounting, in commun*	*a controller, including at least one of the one or more processors, integrated with the structure via mounting, in commun*	*a controller, including at least one of the one or more processors, integrated with the structure via mounting, in commun*	*a controller, including at least one of the one or more processors, integrated with the structure via mounting, in commun*	*a controller, including at least one of the one or more processors, integrated with the structure via mounting, in commun*	*a controller, including at least one of the one or more processors, integrated with the structure via mounting, in commun*	*a controller, including at least one of the one or more processors, integrated with the structure via mounting, in commun*	*a controller, including at least one of the one or more processors, integrated with the structure via mounting, in commun*

er arranged to processes [sp] the information communicated from the camera and automatically control the light provided to the illuminated area.	*ication with the LED controlling power electronic circuitry apparatus, said controller arranged to process the information communicated from the cameras and to automatically control the light provided to the illuminated area; and*	*ication with the LED controlling power electronic circuitry apparatus, said controller arranged to process the information communicated from the cameras and to automatically control the light provided to the illuminated area; and*	*ication with the LED controlling power electronic circuitry apparatus, said controller arranged to process the information communicated from the cameras and to automatically control the light provided to the illuminated area; and*	*ication with the LED controlling power electronic circuitry apparatus, said controller arranged to process the information, communicated from the cameras and to automatically control the light provided to the illuminated area; and*	*ication with the LED controlling power electronic circuitry apparatus, said controller arranged to process the information communicated from the cameras and to automatically control the light provided to the illuminated area; and*	*ication with the LED controlling power electronic circuitry apparatus, said controller arranged to process the information communicated from the cameras and to automatically control the light provided to the illuminated area; and*	*ication with the LED controlling power electronic circuitry apparatus, said controller arranged to process the information communicated from the cameras and to automatically control the light provided to the illuminated area; and*	*ication with the LED controlling power electronic circuitry apparatus, said controller arranged to process the information communicated from the cameras and to automatically control the light provided to the illuminated area; and*
	memory storing instructions that, when executed by one or more process	*memory storing instructions that, when executed by one or more process*	*memory storing instructions that, when executed by one or more process*	*memory storing instructions that, when executed by one or more process*	*memory storing instructions that, when executed by one or more process*	*memory storing instructions that, when executed by one or more process*	*memory storing instructions that, when executed by one or more process*	*memory storing instructions that, when executed by one or more process*

	ors of the controller, enable the controller to:	ors of the controller, enable the controller to:	ors of the controller, enable the controller to:	ors of the controller, enable the controller to:	ors of the controller, enable the controller to:	ors of the controller, enable the controller to:	ors of the controller, enable the controller to:	ors of the controller, enable the controller to:
	determine first coordinates corresponding to another vehicle, based on the coordinate-specific information;	create a beam of diminished illumination illuminating at least a portion of the at least one target with non-glaring illumination, created within a broader field of illumination having different intensity than the beam, by one or more changes to characteristics of first	determine a first cluster of the LEDs illuminating at least a first portion of a first other vehicle based at least in part on data from one or more of the sensors indicating a first position associated with the first other vehicle;	illuminate a portion of at least one object, indicated by data from at least one of the one or more sensors, by selecting a first cluster of the LEDs to emit first light directed towards a first area including the at least the portion of at least one object,	determine, based on data from one or more of the sensors, a vertical and horizontal position associated with the at least one other vehicle;	select a first cluster of the LEDs having light associated therewith that is directed towards the other vehicle based at least in part on first data from one or more of the sensors indicating a first position associated with the other vehicle;	determine a target based on first data from one or more of the sensors;	identify, based on data received from one or more of the sensors, a plurality of positions associated with the target as the target moves relative to the motor vehicle; and

		light of a cluster of the LEDs providing the first light directed at the at least a portion and creating the beam, the beam diminished in intensity relative to the broader field of illumination illuminating at least above and on both sides of the beam; and		*the first area determined based at least in part on the data, the first cluster selected based at least in part on known aimings of light associated with the first cluster determined to correspond to the first area, and the first light determined based at least in part on classifying the object based at least in part on the data;*				

	select a cluster of the LEDs that emit light toward at least a portion of the other vehicle based on the LEDs having emission aimings associated with the first coordinates; and	follow, based at least in part on data from one or more of the cameras, the at least one target with the diminished illumination as the at least one target changes location relative to the motor vehicle.	diminish glaring illumination of the first other vehicle by a first change to one or more characteristics of first light of at least the first cluster;	and control light emitted from the first cluster directed towards the first area to be different in at least one emission characteristic, based on the first light determination, from second light emitted from a second, different cluster of the LEDs, directed towards one or more illuminated second areas at a common	select a first cluster of the LEDs based at least in part on at least one of the vertical and horizontal position compared to known aimings of light associated with the first cluster; and	control a first change to one or more characteristics of the light associated with the first cluster of the LEDs that is directed towards the other vehicle, that diminishes glare to a driver of the other vehicle when the other vehicle is at the first position;	determine a first target location based on the first data;	change, responsive to the positions associated with the target, first light associated with one or more LEDs aimed toward at least a portion of the target, relative to second light associated with other one or more of the LEDs aimed laterally adjacent the target on either side, as the target moves relative

				elevation with the first area and laterally adjacent to the first area.				to the motor vehicle.
	change emission of the selected cluster of LEDs relative to emission of other LEDs not included in the cluster to create headlamp illumination that preserves a first level of illumination illuminating past the other vehicle while preventing glare to a		determine a second, different cluster of the LEDs illuminating at least a second portion of a second other vehicle based at least in part on the data indicating a second position associated with the second other vehicle;		reduce intensity of illumination to non-glaring illumination of a first area associated with the at least one other vehicle, relative to intensity of illumination on both sides of the first area at elevations common with the first area illuminated by a	select a second, different cluster of the LEDs having light associated therewith that is directed towards the other vehicle based at least in part on second, subsequent data from one or more of the sensors indicating a second, subsequent position associated with	select a cluster of the LEDs having light associated therewith that is directed at the target, determined based on the first target location;	

	driver of the other vehicle.				*second cluster of the LEDs, by control of emission from the first cluster.*	*the other vehicle; and*		
			diminish glaring illumination of the second other vehicle by a second change to one or more characteristics of second light of at least the second, different cluster,			*control a second, subsequent change, to one or more characteristics of the light that is subsequently directed towards the other vehicle, that diminishes glare to the driver of the other vehicle when the other vehicle is at the*	*vary illumination provided to the target by the selected cluster, relative to illumination provided to areas laterally adjacent to the target and provided by at least one LED different from LEDs in the selected cluster; and*	

						second position .		
			wherein the first and second changes decrease intensity of first emission from the first cluster and second emission from the second cluster relative to a third emission, from the at least one headlamp, illuminating an area between the first and second portion.				maintain a variance of illumination provided to the target relative to the laterally adjacent areas, when subsequent data from one or more of the cameras indicates a change in position of the target relative to the motor vehicle, by repeating the determination of target location , selectio	

							n of the cluster and variance to illumination provided to the target, relative to the laterally adjacent areas, based on the subsequent data.	

Exhibit OTH-G

European Patent No.
EP1391347 B1
Krukenbaum et al.

(19) Europäisches Patentamt
European Patent Office
Office européen des brevets

(11) EP 1 391 347 B1

(12) **EUROPÄISCHE PATENTSCHRIFT**

(45) Veröffentlichungstag und Bekanntmachung des Hinweises auf die Patenterteilung:
23.04.2008 Patentblatt 2008/17

(51) Int Cl.:
B60Q 1/068 *(2006.01)* ***B60Q 1/076*** *(2006.01)*
B60Q 1/12 *(2006.01)*

(21) Anmeldenummer: **03102332.8**

(22) Anmeldetag: **29.07.2003**

(54) **Scheinwerfer für Fahrzeuge**

Headlamp for vehicle

Projecteur pour véhicule

(84) Benannte Vertragsstaaten:
DE ES FR IT

(30) Priorität: **23.08.2002 DE 10238792**

(43) Veröffentlichungstag der Anmeldung:
25.02.2004 Patentblatt 2004/09

(73) Patentinhaber: **Hella KGaA Hueck & Co.**
59552 Lippstadt (DE)

(72) Erfinder:
- **Krukenbaum, Friedrich**
  59069 Hamm (DE)
- **Willeke, Franz-Georg**
  59609 Anröchte (DE)

(56) Entgegenhaltungen:
EP-A- 0 081 399 **EP-A- 1 120 310**
DE-A1- 10 045 943 **FR-A- 2 424 157**

Anmerkung: Innerhalb von neun Monaten nach der Bekanntmachung des Hinweises auf die Erteilung des europäischen Patents kann jedermann beim Europäischen Patentamt gegen das erteilte europäische Patent Einspruch einlegen. Der Einspruch ist schriftlich einzureichen und zu begründen. Er gilt erst als eingelegt, wenn die Einspruchsgebühr entrichtet worden ist. (Art. 99(1) Europäisches Patentübereinkommen).

Printed by Jouve, 75001 PARIS (FR)

Beschreibung

[0001] Die Erfindung betrifft einen Scheinwerfer für Fahrzeuge mit einem Gehäuse, mit einem im Inneren des Gehäuses angeordneten Abblendlicht- und einem Fernlichtmodul, mit Einstellvorrichtungen für das Abblendlichtmodul und das Fernlichtmodul, durch welche das Abblendlichtmodul zur Grundeinstellung um eine horizontale und vertikale Achse schwenkbar und das Fernlichtmodul zur Justierung um eine horizontale Achse schwenkbar ist, und mit einem zwischen Abblendlicht- und Fernlichtmodul verlaufenden Koppelelement, zwischen dem und dem Abblendlicht- und Fernlichtmodul jeweils eine gelenkartige Verbindung besteht, durch welches das Fernlichtmodul bei einem Schwenken des Abblendlichtmoduls um seine horizontale Achse um eine horizontale Achse mitschwenkt.

[0002] Ein solcher Scheinwerfer für Fahrzeuge ist aus der DE - U- 20202442 bekannt. Der Scheinwerfer weist ein aus Kunststoff bestehendes Gehäuse auf, dessen Vorderseite durch eine lichtdurchlässige Abschlussscheibe abgeschlossen ist. Im Inneren des Gehäuses ist ein Abblendlicht- und ein Fernlichtmodul angeordnet. Als Abblendlichtmodul dient ein Projektionsmodul und als Fernlichtmodul ein schalenförmiger Reflektor für Fernlicht. Die Vorderseiten des Abblendlicht- und Fernlichtmoduls sind in Lichtaustrittsrichtung zueinander versetzt angeordnet. Der Tragrahmen des Abblendlichtmoduls und des schalenförmigen Reflektors sind durch ein Koppelelement verbunden. Als Koppelelement dient ein Führungsstück, das mit Führungsflächen des Gehäuses zusammenwirkt und von den Führungsflächen vertikal gehaltert ist. Das Führungsstück haltert wiederum eine von einem Leuchtweiteregler gebildete Ei n-stellvorrichtung, die mit dem unteren Bereich des Tragrahmens des Abblendlichtmoduls gelenkig verbunden ist. Das Führungsstück haltert wiederum über den Leuchtweiteregler das Abblendlichtmodul. Durch den Leuchtweiteregler ist das Abblendlichtmodul um ein horizontale Achse schwenkbar. Die horizontale Achse ist definiert durch zwei zwischen dem oberen Bereich des Tragrahmens und dem Gehäuse bestehenden Schwenklager. Ein Schwenklager ist ortsfest ausgeführt, während das andere Schwenklager zu einer manuellen Einstellvorrichtung gehört. Durch diese Einstellvorrichtung ist das Abblendlichtmodul um eine vertikale Achse schwenkbar, die von der gelenkigen Verbindung zwischen dem Leuchtweiteregler und dem ortsfesten Schwenklager gebildet ist und die benachbart zu dem schalenförmigen Reflektor verläuft. Der schalenförmige Reflektor ist an seinem oberen Bereich über zwei Schwenklager mit dem Gehäuse verbunden. Die beiden Schwenklager sind jeweils mit einer manuellen Einstellvorrichtung gekoppelt und definieren eine horizontale Achse. Im unteren Bereich des schalenförmigen Reflektors ist das Führungsstück gelenkig mit dem Reflektor verbunden. Das Führungsstück ist zusammen mit dem Leuchtweiteregier durch eine manuelle Einstellvorrichtung, die eine mit dem Gehäuse verbundene Einstellschraube aufweist, in bzw. entgegen der Lichtaustrittsrichtung des Scheinwerfers verschiebbar. Dadurch ist das Abblendlichtmodul gemeinsam mit dem Fernlichtmodul um jeweils eine horizontale Achse manuell schwenkbar. Die beiden manuellen Einstellvorrichtungen des Fernlichtmoduls dienen zur Justierung des Fernlichtmoduls gegenüber dem Abblendlichtmodul. Das Führungsstück, welches das Fernlichtmodul mit dem Abblendlichtmodul koppelt, muss groß dimensioniert und in einer Führung des Gehäuses verschiebbar und gehaltert sein, da es die von dem Leuchtweiteregler gebildete Einstellvorrichtung und das Abblendlichtmodul trägt. Weiterhin kann wegen der großen Ausdehnung des Führungsstücks sich verziehen und ist dann nur noch schwergängig in der Führung des Gehäuses verschiebbar.

[0003] Aus der EP -A- 1 120 310 ist ein Scheinwerfer für Fahrzeuge bekanntgeworden, bei dem im Inneren des Scheinwerfers ein Abblendlichtmodul angeordnet ist, das durch eine von einem Leuchtweiteregler gebildete Einstellvorrichtung um ein horizontale Achse schwenkbar ist. Seitlich neben dem Abblendlichtmodul ist im Gehäuse eine Abstandsmesseinheit angeordnet. Die Abstandsmesseinheit ist an dem Gehäuse um zwei Schwenklager um eine horizontale Achse schwenkbar. Das Abblendlichtmodul und die Abstandsmesseinheit sind durch ein Koppelelement miteinander verbunden. Als Koppelelement dient ein Gelenkelement, das gelenkig mit dem Abblendlichtmodul und der Abstandsmesseinheit verbunden ist. Dadurch ist der Abblendlichtmodul und die Abstandsmesseinheit gemeinsam um jeweils eine horizontale Achse durch den Leuchtweiteregler schwenkbar. Das Gelenkelement besteht aus einem Gewindebolzen, der in eine an der Abstandsmesseinheit gelagerten Mutter eingreift und mit einem Kugelkopf gelenkig an dem Abblendlichtmodul gelagert ist. Dadurch ist die Abstandsmesseinheit gegenüber dem Abblendlicht justierbar. Nachteilig hierbei ist, dass die Justiervorrichtung aus vielen Einzelteilen besteht und nur durch umständlich durch eine durch einen Deckel verschließbare Gehäuseöffnung hindurch zugänglich ist. Ferner kann sich beim gemeinsamen Verstellen von Abblendlichtmodul und Abstandsmesseinheit die Justiervorrichtung mit bewegen und sich somit selbsttätig verstellen.

[0004] Aufgabe der Erfindung ist es, den im Oberbegriff des Anspruch 1 beschriebenen Scheinwerfer für Fahrzeuge derart zu verbessern, dass alle Einstellungen von dem Abblendlicht- und Fernlichtmodul des Koppelelements funktionssicher durchführbar sind. Diese Aufgabe wird nach der Erfindung dadurch gelöst, dass alle Einstellvorrichtungen für das Abblendlicht- und das Fernlichtmodul zwischen denselben und dem Gehäuse des Scheinwerfers bestehen und das Koppelelement ein Gelenkelement einer Gelenkvorrichtung ist und ausschließlich an gelenkartigen Verbindungen des Abblendlicht- und Fernlichtmoduls gehalten ist. Dadurch ist

ein einfacher Aufbau des Koppelelements möglich und die zur Justierung des Fernlichtmoduls dienende Einstellvorrichtung, durch die das Fernlichtmodul um eine horizontale Achse schwenkbar ist, kann so ausgeführt sein, dass sie von der Außenseite des Gehäuse her einfach und leicht zugänglich ist. Weiterhin können der Leuchtweiteregler und die zur Justierung des Fernlichtmoduls dienende Einstellvorrichtung ohne Rücksicht auf das Koppelelement und das Koppelelement ohne Rücksicht auf den Leuchtweiteregler und die zur Justierung des Fernlichtmoduls dienende Einstellvorrichtung dimensioniert und gestaltet sein.

[0005] Das Koppelelement ist kostengünstig herstellbar, wenn es stangenförmig ausgeführt und ein einstükkiges Bauteil ist.

[0006] Weiterhin ist es vorteilhaft, wenn das Koppelelement, bei in Lichtaustrittsrichtung versetzt zueinander angeordneten Vorderseiten des Abblendlicht- und Fernlichtmoduls, mindestens in einem Abschnitt zwischen den Vorderseiten verläuft, und die gelenkartigen Verbindungen der Gelenkvorrichtung an den sich benachbarten Randbereichen des Abblendlicht- und Fernlichtmoduls angeordnet sind. Dadurch baut das Koppelelement möglichst kurz und eine Dejustierung des Fernlichtmoduls durch eine Ausdehnung des Koppelelements infolge einer großen Temperaturerhöhung im Scheinwerferinneren ist sehr klein und somit nicht mehr störend. In diesem Zusammenhang ist es weiterhin vorteilhaft, wenn es entlang einer in Lichtaustrittsrichtung verlaufenden Vertikalebene verläuft und die gelenkartigen Verbindungen am vorderen und hinteren Endabschnitt des Koppelelements angeordnet sind. Dadurch ist an den gelenkartigen Verbindungen des Koppelelements beim gemeinsamen Verstellen von Abblendlichtmodul und Fernlichtmodul kein Verklemmen und Verkanten des Koppelelements möglich.

[0007] Ein weiterer Vorteil besteht, wenn eine gelenkartige Verbindung benachbart zu einem Gelenkpunkt der Einstellvorrichtung, durch die das Abblendlichtmodul um die horizontale Achse schwenkbar ist, an dem Abblendlichtmodul angeordnet ist. Durch diese Mittel ist auch bei einem leicht bauenden Abblendlichtmodul eine stabile Verbindung zwischen dem Abblendlichtmodul und dem Koppelelement gegeben. Je näher die gelenkartige Verbindung zu dem Gelenkpunkt angeordnet ist, um so leichtgängiger ist das Abblendlichtmodul um die durch den Gelenkpunkt hindurchgehende Achse schwenkbar. Besonders vorteilhaft ist es, wenn der die gelenkartige Verbindung von dem letzteren Gelenkpunkt gebildet ist.

[0008] Die Gelenkvorrichtung ist kostengünstig herstellbar und das Koppelelement ist einfach und schnell montierbar, wenn die gelenkartigen Verbindungen von einem Lagerzapfen und einer Lageröffnung gebildet sind, deren Schwenkachse quer zur Lichtaustrittrichtung des Scheinwerfers verläuft, und die Lagerzapfen und Lageröffnungen von einstückig mit Bauteilen des Abblendlichtmoduls bzw. Fernlichtmoduls ausgeführten Gelenkteilen gebildet sind.

[0009] Weiterhin ist es zweckmäßig, wenn die vertikale Achse für das Abblendlichtmodul durch Gelenkpunkte definiert ist, die am Abblendlichtmodul benachbart zum Fernlichtmodul angeordnet sind und zwischen dem Abblendlichtmodul und dem Gehäuse bestehen. Dadurch ist die Seite des Abblendlichtmoduls, die über das Koppelelement das Fernlichtmodul haltert, sicher gegen die im Fahrbetrieb auftretenden Vibrationen gehalten.

[0010] Bei einer besonders vorteilhaften Weiterbildung der Erfindung weist die dem Abblendlichtmodul zugeordnete Einstellvorrichtung, durch die das Abblendlichtmodul und das Fernlichtmodul gemeinsam um horizontale Achsen schwenkbar sind, eine Verstelleinrichtung zur Grundeinstellung des Abblendlicht- und Fernlichtmoduls und einen automatischen Leuchtweiteregler auf. Dadurch ist die Leuchtweite des Abblendlichtmoduls und des Fernlichtmoduls gemeinsam sowohl zur Grundeinstellung als auch durch den automatischen Leuchtweiteregler verstellbar. Die Verstelleinrichtung zur Grundeinstellung kann manuell oder automatisch durch den Leuchtweiteregler erfolgen.

[0011] Weiterhin ist es vorteilhaft, wenn das Fernlichtmodul ein schalenförmiger Reflektor und das Abblendlichtmodul ein Schwenkmodul für Kurvenlicht ist, wobei eine gelenkartige Verbindung des Koppelelements von einem das Kurvenlichtmodul umgebenden Rahmen gebildet ist. Da wegen der großen Masse eines Kurvenlichtmoduls sein zur Halterung dienender Rahmen stabil ausgeführt ist, ist auch das vergleichsweise leichte Fernlichtmodul über das Koppelelement sicher gegen Vibrationen gehalten.

[0012] Zwei Ausführungsbeispiele nach der Erfindung sind in der Zeichnung dargestellt und zwar zeigen

[0013] Figur 1 in einer perspektivischen Ansicht einen ersten Scheinwerfer für Fahrzeuge, bei dem ein Abblendlicht- und ein Fernlichtmodul gemeinsam durch Einstellvorrichtungen sowohl manuell als auch automatisch um horizontale Achsen schwenkbar sind, und

[0014] Figur 2 in einer perspektivischen Ansicht einen zweiten Scheinwerfer für Fahrzeuge, bei dem ein Abblendlicht- und ein Fernlichtmodul gemeinsam durch eine Einstellvorrichtung manuell um horizontale Achsen schwenkbar sind und ausschließlich das Abblendlichtmodul durch einen Leuchtweiteregler automatisch um eine horizontale Achse schwenkbar ist.

[0015] Der erste Scheinwerfer (Figur 1) für Fahrzeuge weist ein Abblendlichtmodul 1 und ein Fernlichtmodul 2 auf, welche in einem nicht dargestellten Gehäuse angeordnet sind. Die Vorderseiten 18 und 19 des Abblendlicht- und Fernlichtmoduls 1 und 2 sind in Lichtaustrittsrichtung versetzt zueinander angeordnet. Von dem Abblendlichtmodul 1 ist nur ein äußerer Rahmen 16 dargestellt. In den Rahmen 16 des Abblendlichtmoduls 1 ist ein nicht dargestelltes Schwenkmodul eingesetzt, welches für Kurvenlicht um eine vertikale Achse schwenkbar ist. Der Rahmen 16 ist über drei Gelenkpunkte 17, 20 und 21 mit dem Gehäuse verbunden. Die beiden Gelenkpunkte 17 und 21 sind in den Eckbereichen des dem

Fernlichtmodul 2 nahen Randbereich des Rahmens 16 angeordnet und definieren eine vertikale Achse 8. Um die vertikale Achse 8 ist das Abblendlichtmodul 1 bzw. der Rahmen 16 durch eine dem Gelenkpunkt 20 zugeordnete manuelle Einstellvorrichtung 3 zur Grundeinstellung schwenkbar. Die Einstellvorrichtung 3 ist an dem Gehäuse gehaltert und weist eine Getriebeanordnung 22 auf, durch die eine Verstellung des Abblendlichtmoduls 1 von der oberen Seite des Gehäuses her möglich ist. Der Gelenkpunkt 20 ist an einem äußeren unteren Eckbereich des Rahmens 16 und der Gelenkpunkt 21 am inneren unteren Eckbereich des Rahmens 16 angeordnet. Die beiden Gelenkpunkte 20 und 21 definieren eine horizontale Achse 7 um die das Abblendlichtmodul 1 durch eine dem oberen Gelenkpunkt 17 zugeordnete Einstellvorrichtung 4/5 schwenkbar ist. Die Einstellvorrichtung 4/5 setzt sich zusammen aus einer von einer manuellen Verstellvorrichtung gebildeten Einstellvorrichtung 4 und einer von einem automatischen Leuchtweiteregler gebildeten Einstellvorrichtung 5. Die Einstellvorrichtung 5 ist am Gehäuse gehaltert, während die Einstellvorrichtung 4 zwischen der Einstellvorrichtung 5 und dem Gelenkpunkt 17 angeordnet ist. Das Fernlichtmodul 2 ist gegenüber dem Abblendlichtmodul 1 nach vorne hin versetzt angeordnet. Als Fernlichtmodul 2 dient ein aus Kunststoff bestehender schalenförmiger Reflektor. An den unteren Randbereich des Fernlichtmoduls 2 sind zwei Gelenkpunkte 23 angebracht, die eine horizontale Achse 13 definieren und denen eine Einstellvorrichtung 6 zugeordnet ist. Die Einstellvorrichtung 6 besteht aus zwei an dem Gehäuse gehalterten Einstellschrauben. Das Fernlichtmodul 2 ist mit dem Abblendlichtmodul 1 durch ein Koppelelement 10 verbunden. Das Koppelelement 10 ist einstückig aus Kunststoff herstellt und stangenförmig ausgeführt. Zwischen den freien Endabschnitten des Koppelelements 10 und dem Abblendlicht- und Fernlichtmodul 1 und 2 besteht jeweils eine gelenkartig Verbindung 11 bzw. 12. Die gelenkartige Verbindung 11 ist nahe dem Gelenkpunkt 17 und die gelenkartig Verbindung 12 in dem dem Rahmen 16 benachbarten oberen Randbereich des Fernlichtlichtmoduls 2 angeordnet. Die gelenkartigen Verbindung 11 und 12 bestehen aus einem Lagerzapfen und einer Lageröffnung (nicht dargestellt). Der Lagerzapfen weist eine ballige Mantelfläche auf, ist in seiner Längsausdehnung geschlitzt und weist an seine beiden freien Endabschnitten jeweils eine Rastnase auf, die die Lageröffnung selbsttätig hintergreift. Die Lageröffnungen sind in eine äußere Wand des Rahmens 16 eingebracht. Bei einem manuellen oder automatischen Schenken des Abblendlichtmoduls 1 durch die Einstellvorrichtung 4/5 um die horizontale Achse 7 schwenkt das Fernlichtmodul 2 wegen dem Koppelelement 10 um die horizontale Achse 13. Die beiden an dem Gehäuse gehalterten Einstellschrauben der Einstellvorrichtung 6 sind von der Außenseite des Gehäuses her einfach und leicht zugänglich und schwenken das Fernlichtmodul bei gleichzeitiger Betätigung um die horizontale Achse 9, die durch die gelenkartige Verbindung 12 definiert ist. Dadurch ist das Fernlichtmodul 2 gegenüber dem Abblendlichtmodul 1 justierbar. Beim Verstellen der äußeren Einstellschraube der Einstellvorrichtung 6 ist schwenkt das Fernlichtmodul 2 um eine vertikale Achse 24, die durch den inneren Gelenkpunkt 23 und die gelenkartige Verbindung 12 hindurchgeht. Die äußere Einstellschraube der Einstellvorrichtung 6 dient somit der Grundeinstellung des Fernlichtmoduls 2. Der Abstand der gelenkartigen Verbindung 11 zur horizontalen Achse 7 des Abblendlichtmoduls 1 und der Abstand der gelenkartige Verbindung 12 zur horizontalen Achse des 13 des Fernlichtmoduls 2 sind gleich groß.

[0016] Der zweite Scheinwerfer (Figur 2) unterscheidet sich gegenüber dem ersten Scheinwerfer (Figur 1) durch nachstehend beschriebene Merkmale. Der automatische Leuchtweiteregler der Einstellvorrichtung 5 ist dem unteren Gelenkpunkt 21 zugeordnet und der Gelenkpunkt 20 ist in dem äußeren oberen Eckbereich des Rahmens 16 angeordnet. Dadurch schwenkt der Leuchtweiteregler der Einstellvorrichtung 5 ausschließlich das Abblendlichtmodul 1 um eine horizontale Achse 25, die durch die oberen Gelenkpunkte 17 und 20 hindurchgeht. Beim manuellen Einstellen des Abblendlichtmoduls 1 durch die Einstellvorrichtung 4 schenkt dieser um die horizontale Achse 7, die nur durch den unteren Gelenkpunkt 21 hindurchgeht. Die Einstellvorrichtung 4 ist mit jeweils einer Einstellschraube den Gelenkpunkten 17 und 20 zugeordnet.

Bezugszeichenliste:

[0017]

1. Abblendlichtmodul
2. Fernlichtmodul
3. Einstellvorrichtung
4. Einstellvorrichtung
5. Einstellvorrichtung
6. Einstellvorrichtung
7. horizontale Achse
8. vertikale Achse
9. horizontale Achse
10. Koppelelement
11. gelenkartige Verbindung
12. gelenkartige Verbindung
13. horizontale Achse
14. Gelenkvorrichtung
15. Bauteil
16. Rahmen
17. Gelenkpunkt
18. Vorderseite
19. Vorderseite
20. Gelenkpunkt
21. Gelenkpunkt
22. Getriebeanordnung
23. Gelenkpunkt
24. vertikale Achse
25. horizontale Achse

Patentansprüche

1. Scheinwerfer für Fahrzeuge mit einem Gehäuse, mit einem im Inneren des Gehäuses angeordneten Abblendlicht- und einem Fernlichtmodul (1 und 2), mit Einstellvorrichtungen (3, 4 und 5) für das Abblendlicht- und Fernlichtmodul (1 und 2), durch welche das Abblendlichtmodul (1) zur Grundeinstellung um eine horizontale und vertikale Achse (7 und 8) schwenkbar ist, und mit einer Einstellvorrichtung (6), durch welche das Fernlichtmodul (2) zur Justierung um eine horizontale Achse (9) schwenkbar ist und welche zwischen dem Fernlichtmodul (2) und dem Gehäuse des Scheinwerfers besteht, und mit einem zwischen Abblendlicht- und Fernlichtmodul (1 und 2) verlaufenden Koppelelement (10), zwischen dem und dem Abblendlicht- und Femlichtmodul (1 und 2) jeweils eine gelenkartige Verbindung (11 und 12) besteht, durch welches das Fernlichtmodul (2) bei einem Schwenken des Abblendlichtmoduls um seine horizontale Achse (7) um eine horizontale Achse (13) mitschwenkt, **dadurch gekennzeichnet, dass** sowohl die Einstellvorrichtungen (3, 4 und 5) für das Abblendlichtmodul (1), durch welche das Abblendlichtmodul (1) zur Grundeinstellung um eine horizontale und vertikale Achse (7 und 8) schwenkbar ist, als auch die Einstellvorrichtung (6) für das Fernlichtmodul (2), durch welche das Fernlichtmodul (2) zur Justierung um eine horizontale Achse (9) schwenkbar ist, zwischen dem Abblendlicht- bzw. Fernlichtmodul (1 bzw. 2) und dem Gehäuse des Scheinwerfers bestehen und das Koppelelement (10) ein Gelenkelement einer Gelenkvorrichtung (14) ist und ausschließlich an den gelenkartigen Verbindungen (11 und 12) des Abblendlicht- und Fernlichtmoduls (1 und 2) gehalten ist.

2. Scheinwerfer nach Anspruch 1, **dadurch gekennzeichnet, dass** das Koppelelement der Gelenkvorrichtung (14) stangenförmig ausgeführt und ein einstückiges Bauteil ist.

3. Scheinwerfer nach Anspruch 1 oder 2, **dadurch gekennzeichnet, dass** das Koppelelement (10), bei in Lichtaustrittsrichtung versetzt zueinander angeordneten Vorderseiten (18 und 19) des Abblendlicht- und Fernlichtmoduls (1 und 2), mindestens mit einem Abschnitt zwischen den Vorderseiten (18 und 19) verläuft.

4. Scheinwerfer nach einem der Ansprüche 1 bis 3, **dadurch gekennzeichnet, dass** das stangenartige Koppelelement (10) entlang einer in Lichtaustrittsrichtung verlaufenden Vertikalebene verläuft und die gelenkartigen Verbindungen (11 und 12) am vorderen und hinteren Endabschnitt des Koppelelements (10) angeordnet sind.

5. Scheinwerfer nach einem der Ansprüche 1 bis 4, **dadurch gekennzeichnet, dass** eine gelenkartige Verbindung (11) benachbart zu einem Gelenkpunkt (17) der Einstellvorrichtung (4), durch die das Abblendlichtmodul (1) um die horizontale Achse (7) schwenkbar ist, an dem Abblendlichtmodul (1) angeordnet ist.

6. Scheinwerfer nach Anspruch 5, **dadurch gekennzeichnet, dass** eine Schwenkachse der gelenkartigen Verbindung (11) durch den Gelenkpunkt (17) hindurchgeht.

7. Scheinwerfer nach Anspruch 5 oder 6, **dadurch gekennzeichnet, dass** der die gelenkartige Verbindung (11) von dem Gelenkpunkt (17) gebildet ist.

8. Scheinwerfer nach einem der Ansprüche 1 bis 7, **dadurch gekennzeichnet, dass** die gelenkartigen Verbindungen (11 und 12) von einem Lagerzapfen und einer Lageröffnung gebildet sind, deren Schwenkachse quer zur Lichtaustrittrichtung des Scheinwerfers verläuft.

9. Scheinwerfer nach einem der Ansprüche 1 bis 8, **dadurch gekennzeichnet, dass** die Lagerzapfen und Lageröffnungen von einstückig mit Bauteilen (15) des Abblendlichtmoduls (1) bzw. Fernlichtmoduls (2) ausgeführten Gelenkteilen gebildet sind.

10. Scheinwerfer nach einem der Ansprüche 1 bis 9, **dadurch gekennzeichnet, dass** die vertikale Achse (8) für das Abblendlichtmodul (1) durch Gelenkpunkte (16) definiert ist, die am Abblendlichtmodul (1) benachbart zum Fernlichtmodul (2) angeordnet sind und zwischen dem Abblendlichtmodul (1) und dem Gehäuse bestehen.

11. Scheinwerfer nach einem der Ansprüche 1 bis 10, **dadurch gekenn-zeichnet, dass** die dem Abblendlichtmodul (1) zugeordnete Einstellvorrichtung (4/5), durch die das Abblendlichtmodul (1) und das Femlichtmodul (2) um horizontale Achsen (7 und 13) und gemeinsam schwenkbar sind, eine Verstelleinrichtung (4) zur Grundeinstellung des Abblendlicht- und Fernlichtmoduls (1 und 2) aufweist.

12. Scheinwerfer nach Anspruch 11, **dadurch gekennzeichnet, dass** die dem Abblendlichtmodul (1) zugeordnete Einstellvorrichtung (4/5), durch die das Abblendlicht- und Femlichtmodul (1 und 2) um horizontale Achsen (7 und 13) schwenkbar sind, einen automatischen Leuchtweiteregler (5) aufweist.

13. Scheinwerfer nach einem der Ansprüche 1 bis 12, **dadurch gekennzeichnet, dass** das Fernlichtmodul (2) ein schalenförmiger Reflektor und das Abblendlichtmodul (1) ein Schwenkmodul für Kurven-

licht ist, wobei eine gelenkartige Verbindung (11) des Koppelelements (10) an einem das Kurvenlichtmodul umgebenden Rahmen (16) angeordnet ist.

14. Scheinwerfer nach einem der Ansprüche 1 bis 13, **dadurch gekenn-zeichnet, dass** die Einstellvorrichtung (6) für das Fernlichtmodul (2) von der Außenseite des Gehäuses her zugänglich ist.

Claims

1. Headlamp for vehicles with a housing, a low beam module and a high beam module (1 and 2) located inside the housing, with adjustment devices (3, 4 and 5, 6) for adjusting the low beam module and the high beam module (1 and 2) such that the low beam module (1) is made to turn around a horizontal and a vertical axis (7 and 8) to attain its neutral position, and with an adjustment device (6) which makes the high beam module (2) turn around a horizontal axis (9) for adjustment which is between the high beam module (2) and the housing of the headlamp, and with a coupling element (10) between the low beam module and the high beam module (1 and 2) which is connected to both the low beam module and the high beam module (1 and 2) by an articulated link (11 and 12) which makes the high beam module (2) turn around a horizontal axis (13) when the low beam module turns around its horizontal axis (7), **characterized in that** both the adjustment devices (3, 4 and 5) for the low beam module (1) which allow the low beam module (1) to be turned around a horizontal and vertical axis (7 and 8) to attain its neutral position, and the adjustment device (6) for the high beam module (2) which allows the high beam module (2) to be turned around a horizontal axis (9) for adjustment connect the low beam module (1) on the one hand and the high beam module (2) on the other with the housing of the headlamp and that the coupling element (10) is an articulated link of a linkage mechanism (14) which is only held by the articulated links (11 and 12) of the low beam module (1) and the high beam module (2).

2. Headlamp of claim 1, **characterized in that** the coupling element of the linkage mechanism (14) is a single-part component made in the shape of a rod.

3. Headlamp of claim 1 or 2, **characterized in that** at least one section of the coupling element (10) is located between the front sides (18 and 19) of the low beam module (1) and the high beam module (2) when these front sides (18 and 19) are at an offset in the direction of light exit.

4. Headlamp as in one of claims 1 to 3, **characterized in that** the rod-like coupling element (10) cuts vertically across the axis of the direction of light exit and that the articulated links (11 and 12) are located at the front and rear terminal sections of the coupling element (10).

5. Headlamp of claims 1 to 4, **characterized in that** an articulated link (11) is attached to the low beam module (1) adjacent to a junction point (17) of the adjustment mechanism (4) which allows the low beam module (1) to be turned around the horizontal axis (7).

6. Headlamp of claim 5, **characterized in that** a rotation axis of the articulated link (11) cuts through the junction point (17).

7. Headlamp of claim 5 or claim 6, **characterized in that** the articulated link (11) is provided by the junction point (17).

8. Headlamp of claims 1 to 7, **characterized in that** the articulated joints (11 and 12) are made up of a journal and bearing cup each whose axis of rotation is diagonally across the direction of the headlamp light.

9. Headlamp of claims 1 to 8, **characterized in that** the journals and bearing cups are made up of link parts which are made up of single-part components (15) of the low beam module (1) or the high beam module (2).

10. Headlamp of claims 1 to 9, **characterized in that** the vertical axis (8) of the low beam module (1) is defined by junction points (16) attached to the low beam module (1) adjacent to the high beam module (2) and located between the low beam module (1) and the housing.

11. Headlamp of claims 1 to 10, **characterized in that** the adjustment mechanism (4/5) allocated to the low beam module (1) which allows the low beam module (1) and the high beam module (2) to be turned together around horizontal axes (7 and 13) features an adjustment mechanism (4) for resetting the low beam module (1) and the high beam module (2) to their normal positions.

12. Headlamp of claim 11, **characterized in that** the adjustment mechanisms (4/5) allocated to the low beam module (1) which allow the low beam module (1) and the high beam module (2) to be turned around horizontal axes (7 and 13) features an automatic headlamp leveling system (5).

13. Headlamp of claims 1 to 12, **characterized in that** the high beam module (2) is a dish-shaped reflector and the low beam module (1) is a projector gr for

bend lighting where an articulated link (11) of the coupling element (10) is connected to a frame (16) around the bend lighting module.

14. Headlamp of claims 1 to 13, **characterized in that** the adjustment mechanism (6) for the high beam module (2) can be accessed from the outside of the housing.

Revendications

1. Projecteur pour véhicules, comprenant un boîtier, avec un module de feu de croisement (1) et un module de feu de route (2) disposés à l'intérieur du boîtier, avec des dispositifs de réglage (3, 4 et 5) du module de feu de croisement (1) et du module de feu de route (2) qui permettent de faire pivoter le module de feu de croisement (1) autour d'un axe horizontal (7) et vertical (8) pour le réglage de base, et avec un dispositif de réglage (6) qui permet de faire pivoter le module de feu de route (2) autour d'un axe horizontal (9) pour l'alignement et qui est disposé entre le module de feu de route (2) et le boîtier du projecteur, et avec un élément d'accouplement (10), qui s'étend entre le module de feu de croisement (1) et le module de feu de route (2) et entre lequel et les modules de feu de croisement et de feu de route (1 et 2) se trouve respectivement une liaison articulée (11 et 12), qui entraîne le module de feu de route (2) en rotation autour d'un axe horizontal (13) lorsque le module de feu de croisement pivote autour de son axe horizontal (7), **caractérisé en ce que** les dispositifs de réglage (3, 4 et 5) du module de feu de croisement (1), qui permettent de faire pivoter le module de feu de croisement (1) autour d'un axe horizontal (7) et vertical (8) pour le réglage de base, de même que le dispositif de réglage (6) du module de feu de route (2), qui permet de faire pivoter le module de feu de route (2) autour d'un axe horizontal (9) pour l'alignement, se trouvent entre le module de feu de croisement (1) ou le module de feu de route (2) et le boîtier du projecteur et **en ce que** l'élément d'accouplement (10) est un élément d'articulation d'un système articulé (14) et est fixé exclusivement sur les liaisons articulées (11 et 12) du module de feu de croisement (1) et du module de feu de route (2).

2. Projecteur selon la revendication 1, **caractérisé en ce que** l'élément d'accouplement du système articulé (14) est réalisé en forme de tige et constitue un composant d'une seule pièce.

3. Projecteur selon la revendication 1 ou la revendication 2, **caractérisé en ce que**, lorsque les faces avant (18 et 19) du module de feu de croisement (1) et du module de feu de route (2) sont disposées de manière décalée l'une par rapport à l'autre dans le sens de sortie de la lumière, une section au moins de l'élément d'accouplement (10) s'étend entre les faces avant (18 et 19).

4. Projecteur selon l'une des revendications 1 à 3, **caractérisé en ce que** l'élément d'accouplement en forme de tige (10) s'étend dans un plan vertical qui s'étend dans le sens de sortie de la lumière et **en ce que** les liaisons articulées (11 et 12) sont disposées dans la partie d'extrémité avant et arrière de l'élément d'accouplement (10).

5. Projecteur selon l'une des revendications 1 à 4, **caractérisé en ce qu'**une liaison articulée (11) est disposée sur le module de feu de croisement (1) au voisinage d'un point d'articulation (17) du dispositif de réglage (4) qui permet de faire pivoter le module de feu de croisement (1) autour de l'axe horizontal (7).

6. Projecteur selon la revendication 5, **caractérisé en ce qu'**un axe de pivotement de la liaison articulée (11) passe par le point d'articulation (17).

7. Projecteur selon la revendication 5 ou la revendication 6, **caractérisé en ce que** la liaison articulée (11) est formée par le point d'articulation (17).

8. Projecteur selon l'une des revendications 1 à 7, **caractérisé en ce que** les liaisons articulées (11 et 12) sont formées par un tourillon et par une ouverture d'appui dont l'axe de pivotement est perpendiculaire au sens de sortie de la lumière du projecteur.

9. Projecteur selon l'une des revendications 1 à 8, **caractérisé en ce que** les tourillons et les ouvertures d'appui sont formées par des pièces d'articulation réalisées d'un seul tenant avec des composants (15) du module de feu de croisement (1) ou du module de feu de route (2).

10. Projecteur selon l'une des revendications 1 à 9, **caractérisé en ce que** l'axe vertical (8) du module de feu de croisement (1) est défini par des points d'articulation (16) qui sont disposés sur le module de feu de croisement (1) au voisinage du module de feu de route (2) et qui se trouvent entre le module de feu de croisement (1) et le boîtier.

11. Projecteur selon l'une des revendications 1 à 10, **caractérisé en ce que** le dispositif de réglage (4/5) associé au module de feu de croisement (1), permettant de faire pivoter le module de feu de croisement (1) et le module de feu de route (2) autour d'axes horizontaux (7 et 13) et ensemble, présente un système ajustable (4) pour le réglage de base du module de feu de croisement (1) et du module de

feu de route (2).

12. Projecteur selon la revendication 11, **caractérisé en ce que** le dispositif de réglage (4/5) associé au module de feu de croisement (1), permettant de faire pivoter le module de feu de croisement (1) et le module de feu de route (2) autour d'axes horizontaux (7 et 13), présente un régulateur automatique de la portée d'éclairage (5).

13. Projecteur selon l'une des revendications 1 à 12, **caractérisé en ce que** le module de feu de route (2) est un réflecteur en forme de bol et le module de feu de croisement (1) est un module pivotant pour l'éclairage dans les virages, une liaison articulée (11) de l'élément d'accouplement (10) étant disposée sur un cadre (16) entourant le module d'éclairage dans les virages.

14. Projecteur selon l'une des revendications 1 à 13, **caractérisé en ce que** le dispositif de réglage (6) du module de feu de route (2) est accessible de l'extérieur du boîtier.

Figur 1

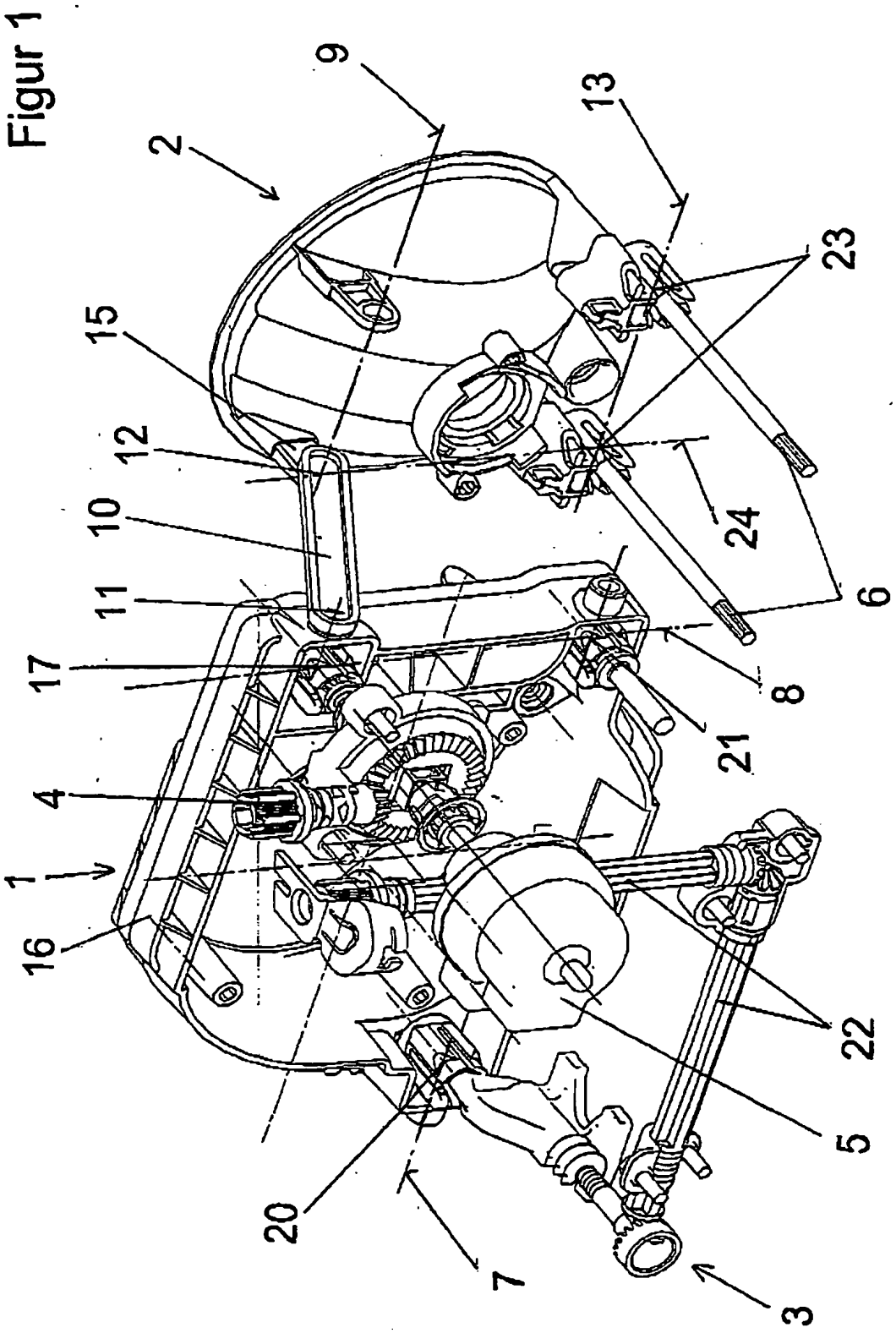

Figur 2

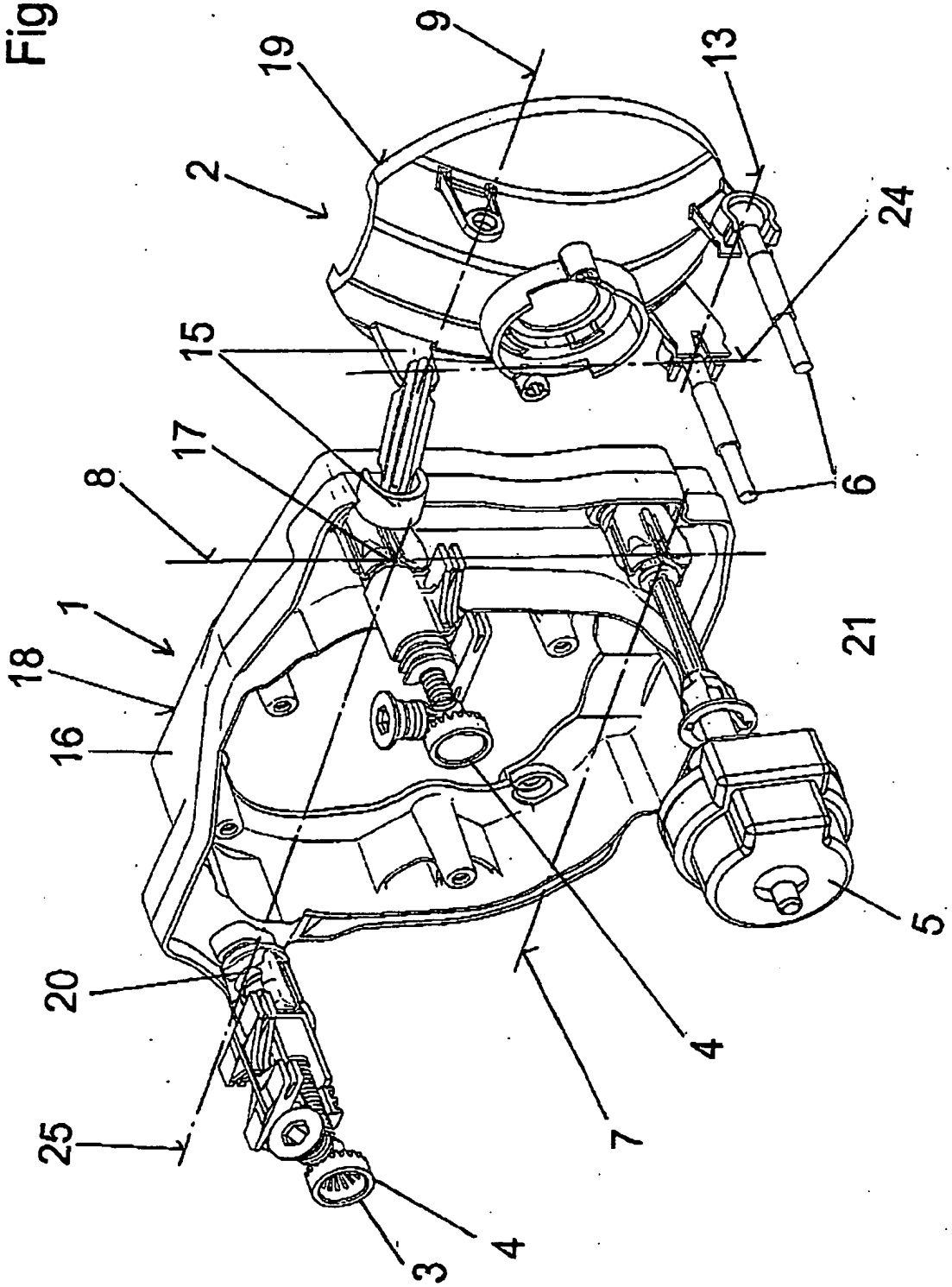

IN DER BESCHREIBUNG AUFGEFÜHRTE DOKUMENTE

Diese Liste der vom Anmelder aufgeführten Dokumente wurde ausschließlich zur Information des Lesers aufgenommen und ist nicht Bestandteil des europäischen Patentdokumentes. Sie wurde mit größter Sorgfalt zusammengestellt; das EPA übernimmt jedoch keinerlei Haftung für etwaige Fehler oder Auslassungen.

In der Beschreibung aufgeführte Patentdokumente

- DE 20202442 U **[0002]**
- EP 1120310 A **[0003]**

Exhibit OTH-H

U.S. Patent No. 6,752,523 B2

Takahashi

US006752523B2

(12) **United States Patent**
Takahashi

(10) **Patent No.: US 6,752,523 B2**
(45) **Date of Patent: Jun. 22, 2004**

(54) **VEHICLE LAMP**

(75) Inventor: **Daisuke Takahashi**, Shimizu (JP)

(73) Assignee: **Koito Manufacturing Co., Ltd.**, Tokyo (JP)

(*) Notice: Subject to any disclaimer, the term of this patent is extended or adjusted under 35 U.S.C. 154(b) by 57 days.

(21) Appl. No.: **10/277,270**

(22) Filed: **Oct. 22, 2002**

(65) **Prior Publication Data**

US 2003/0076690 A1 Apr. 24, 2003

(30) **Foreign Application Priority Data**

Oct. 23, 2001 (JP) 2001-324476

(51) **Int. Cl.**[7] **F21V 13/04**

(52) **U.S. Cl.** **362/545**; 362/522; 362/245; 362/800

(58) **Field of Search** 362/545, 522, 362/245, 328, 240, 800, 309, 308, 307, 300, 520, 544, 543, 236

(56) **References Cited**

U.S. PATENT DOCUMENTS

4,862,330	A	8/1989	Machida et al.	362/522
5,678,335	A	10/1997	Gomi et al.	40/550
6,038,387	A	3/2000	Machida	703/2
6,578,989	B2 *	6/2003	Osumi et al.	362/298

* cited by examiner

Primary Examiner—Sandra O'Shea
Assistant Examiner—B Q T
(74) *Attorney, Agent, or Firm*—Koda & Androlia

(57) **ABSTRACT**

A vehicle lamp that uses a special LED made of: translucent block body, an LED chip embedded in the translucent block body, a semi-spherical shape condenser lens provided on the front end surface of the translucent block body and positioned in front of the LED chip, and a reflector provided inside the translucent block body and forwardly reflects the light from the LED chip. The vehicle lamp includes a front lens disposed in front of the special LED so that the front lens is positioned where the direct light from the LED chip and the reflection light reflected by the reflector start to intersect with each other.

9 Claims, 8 Drawing Sheets

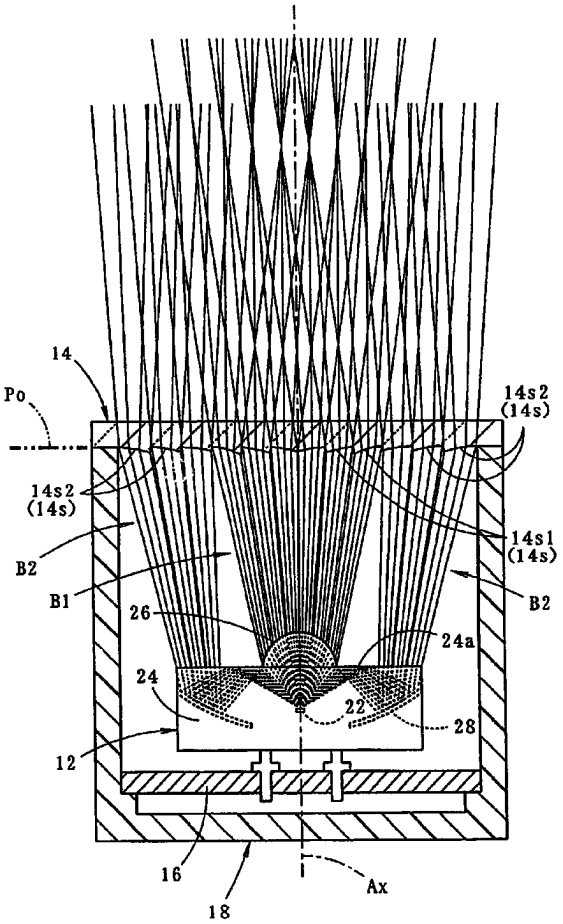

SPERO EX. 2023

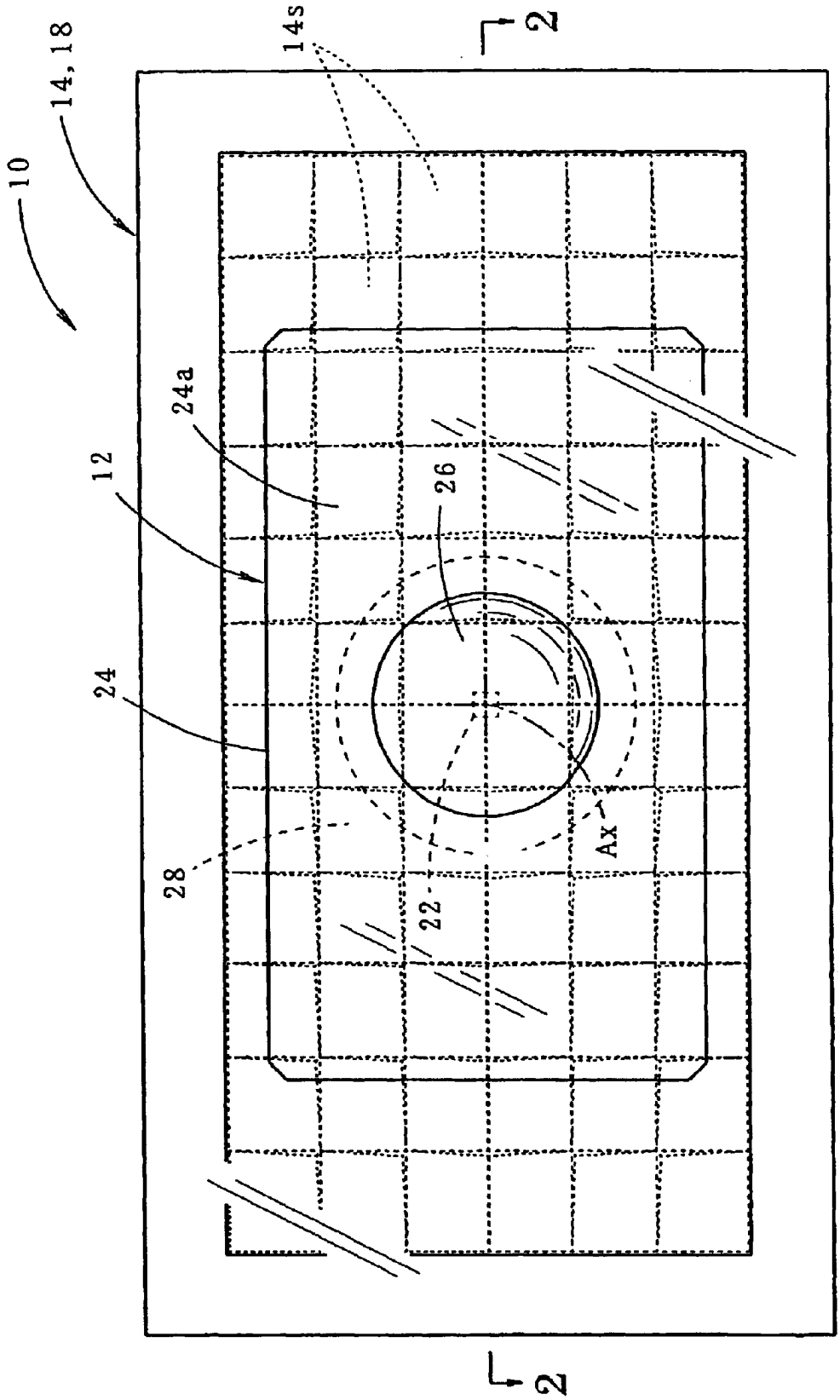

FIG. 1

FIG. 2

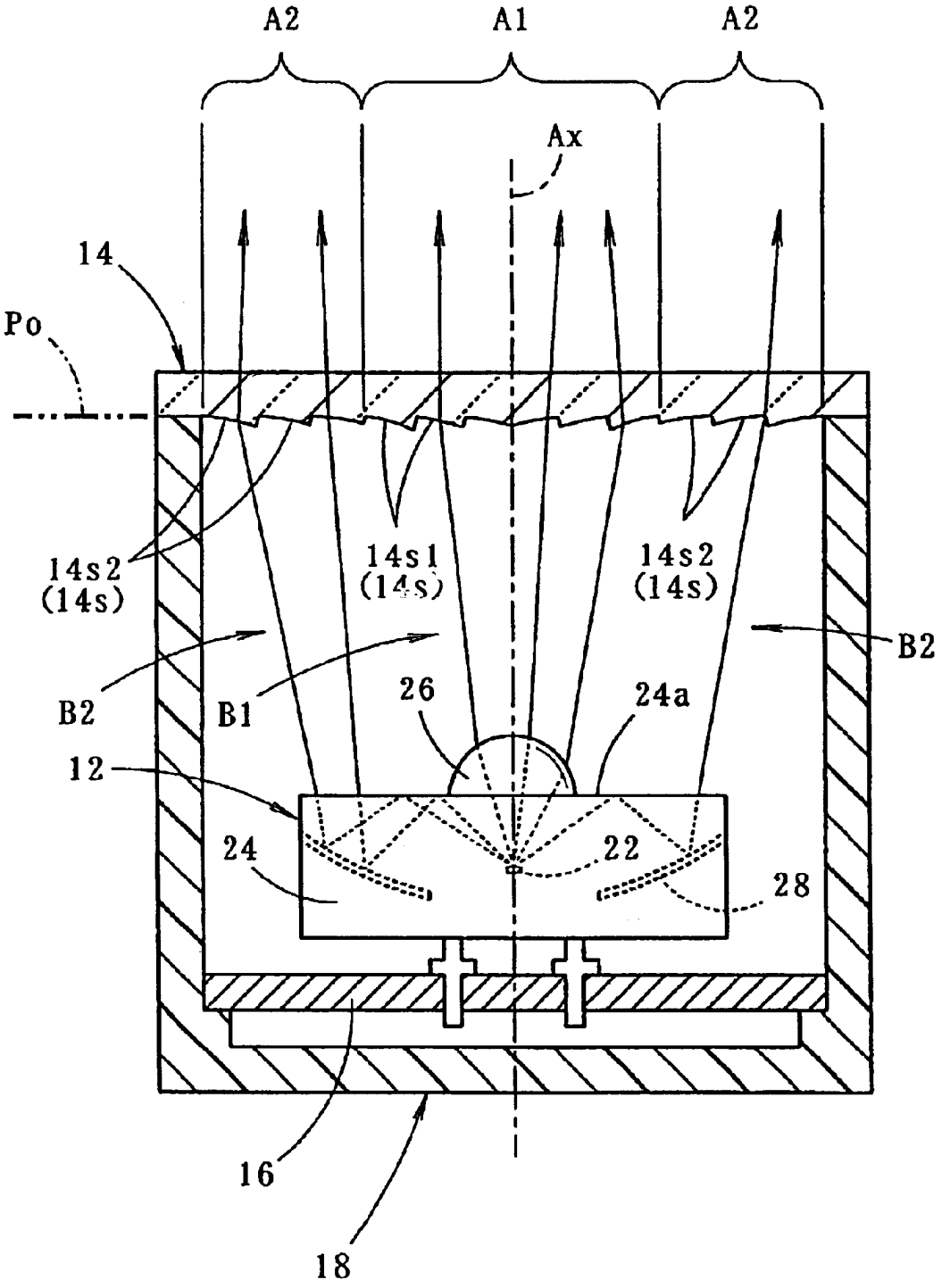
A2
A1
A2
Ax
14
Po
14s2
(14s)
14s1
(14s)
14s2
(14s)
B2
B2
B1
26
24a
12
24
22
28
16
18

FIG. 3

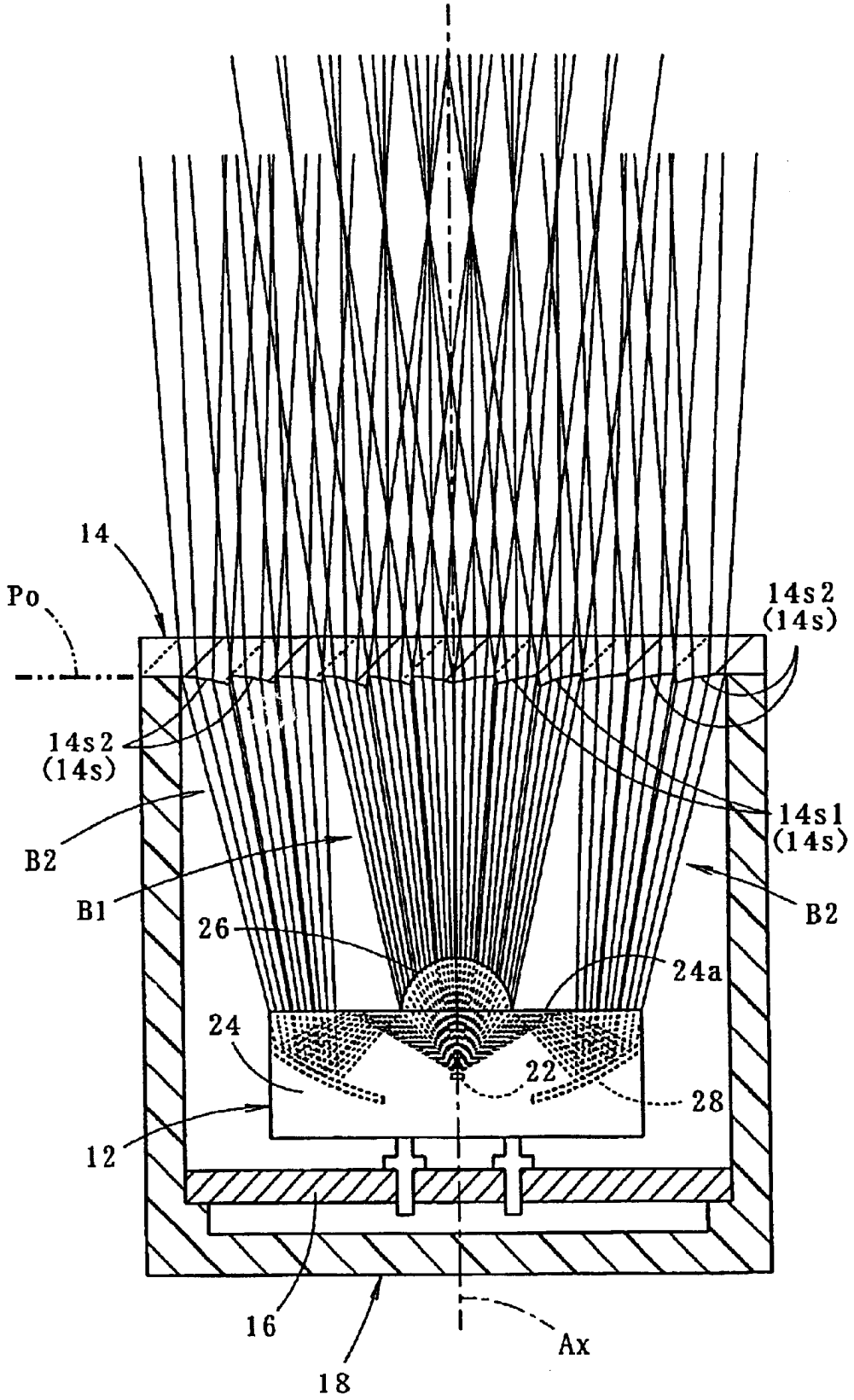
14
Po
14s2
(14s)
14s2
(14s)
14s1
(14s)
B2
B1
B2
26
24a
24
22
28
12
16
18
Ax

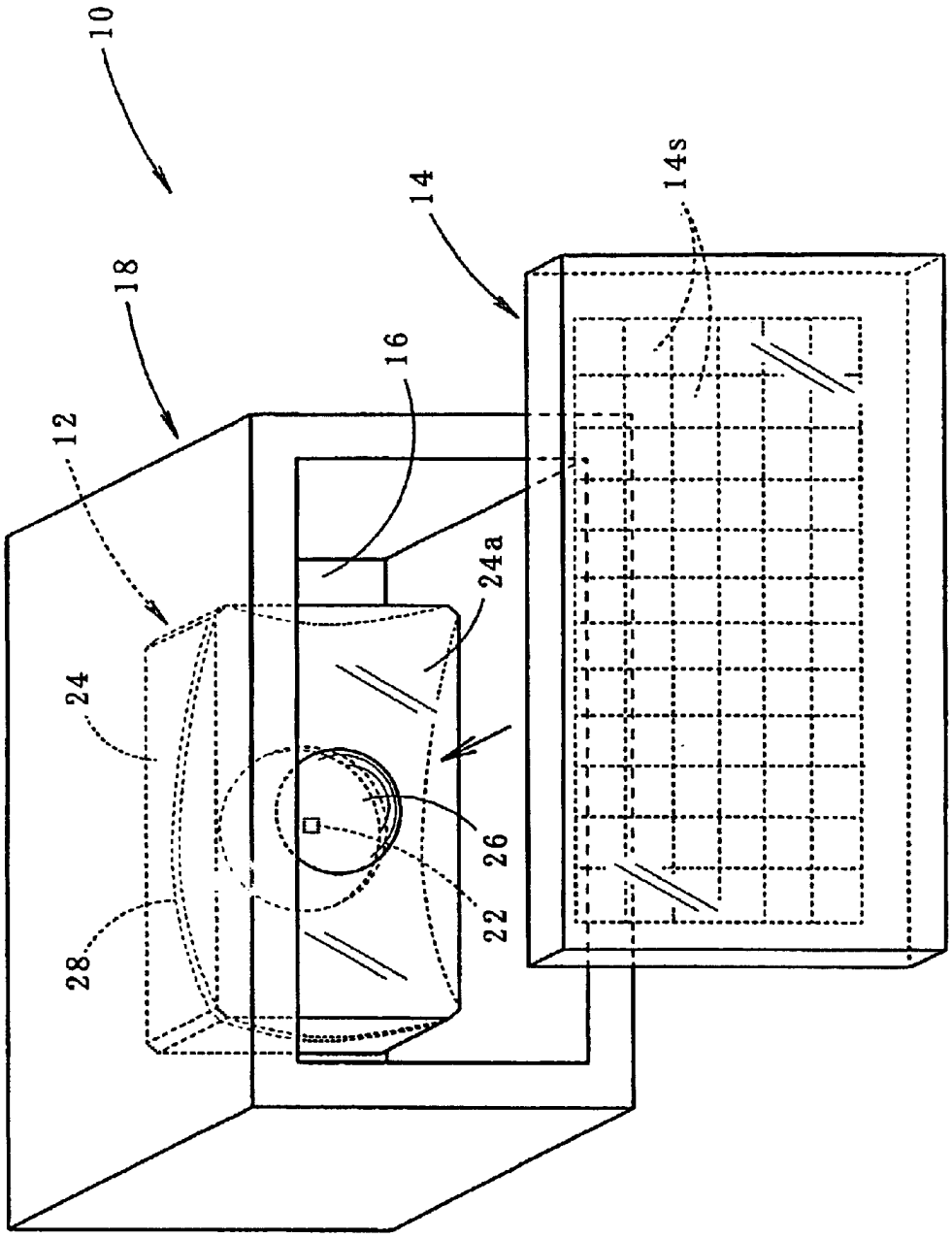

FIG. 4

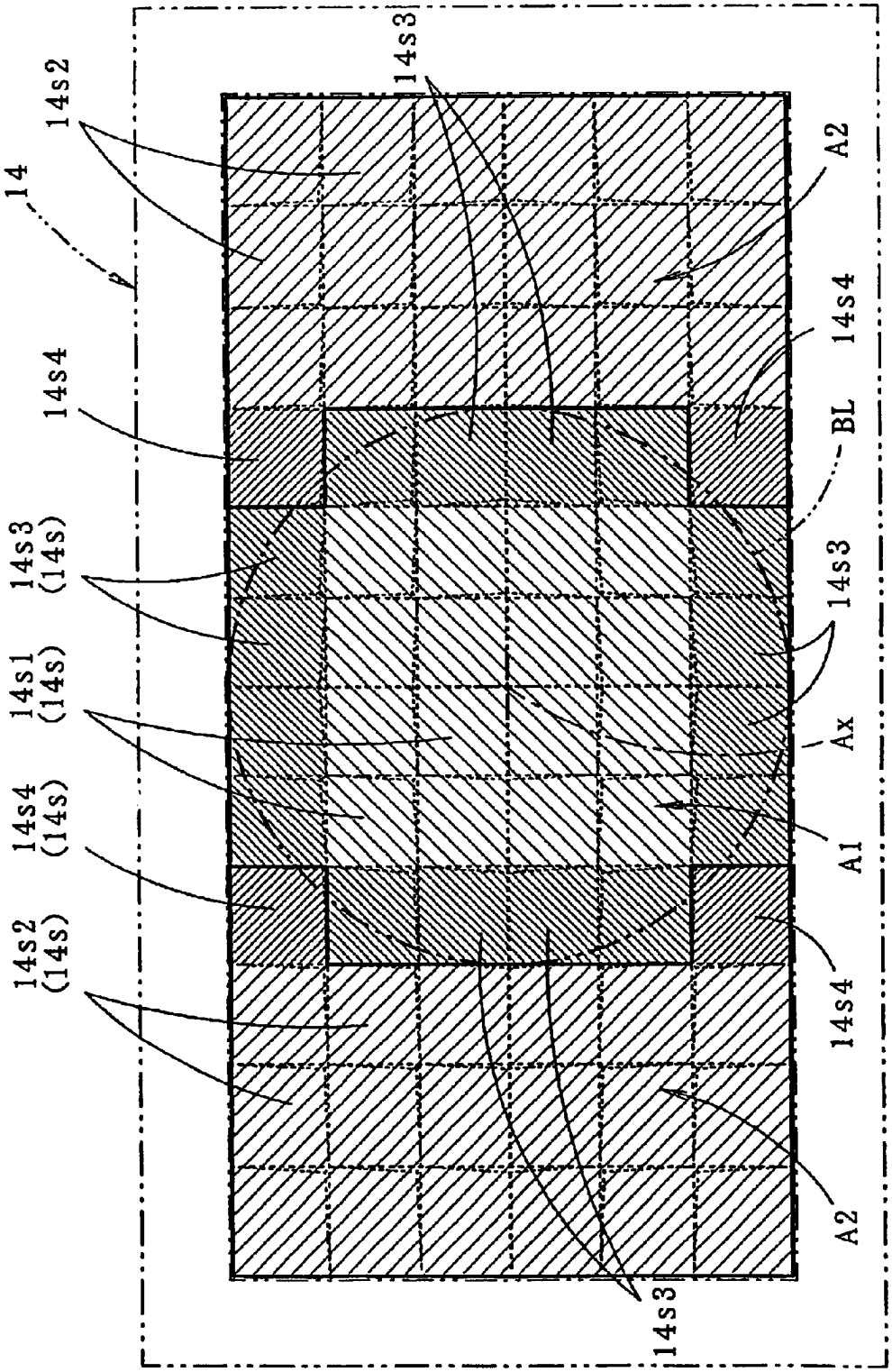
14
14s2
14s4
14s3 (14s)
14s1 (14s)
14s4 (14s)
14s2 (14s)
14s3
A2
14s4
BL
14s3
Ax
A1
14s4
A2
14s3

FIG. 5

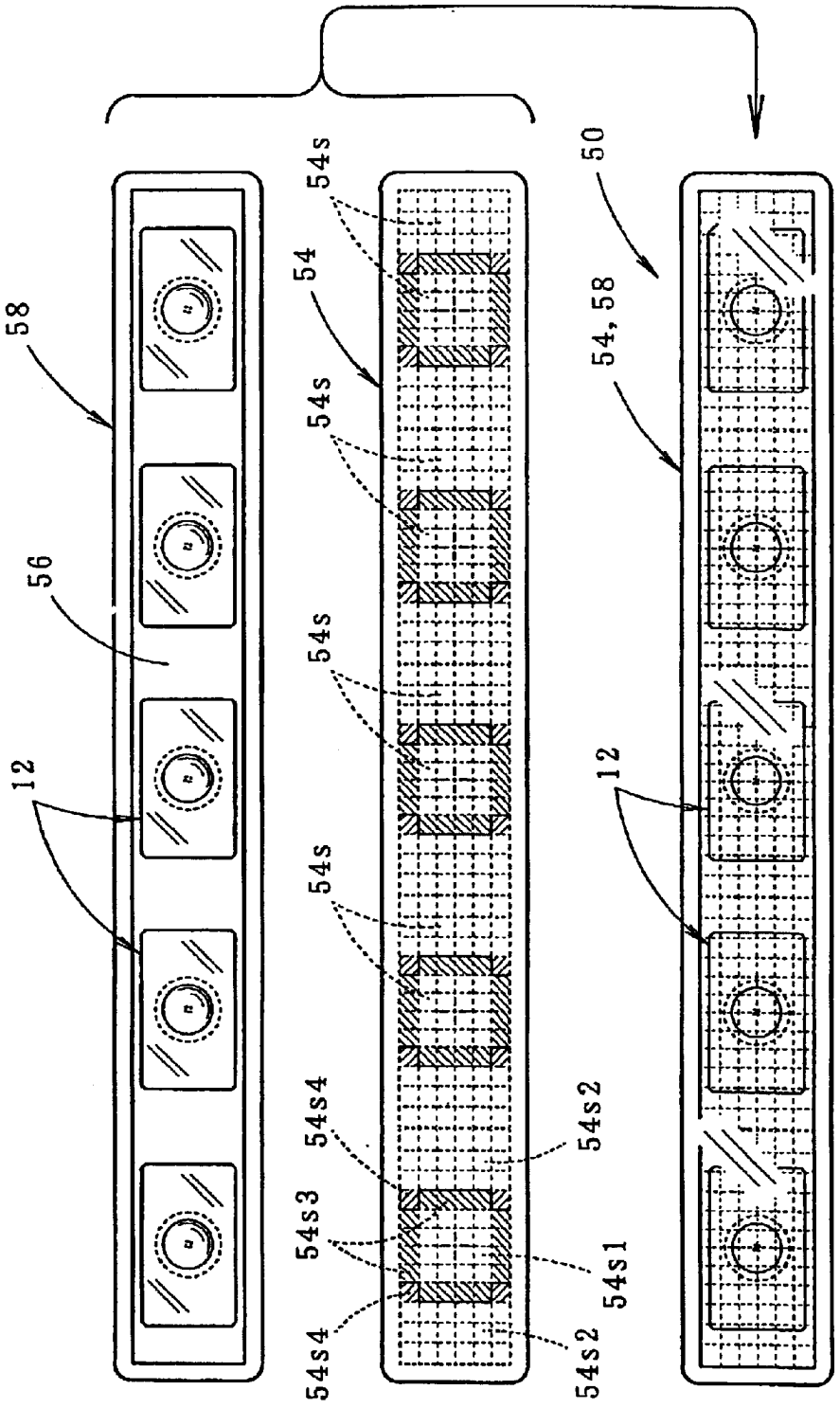

FIG. 6(a)

FIG. 6(b)

FIG. 6(c)

FIG. 7

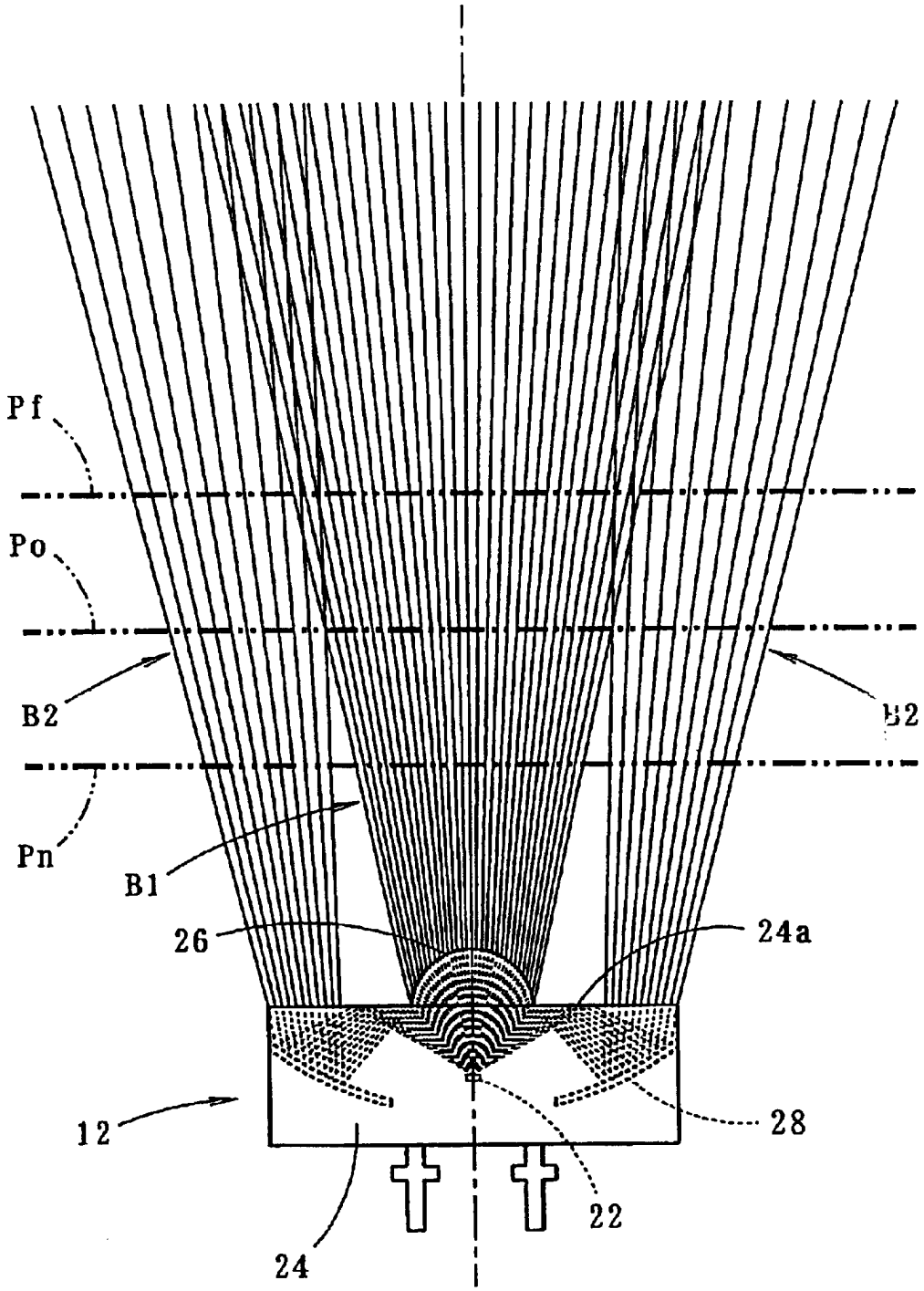

FIG. 8

PRIOR ART

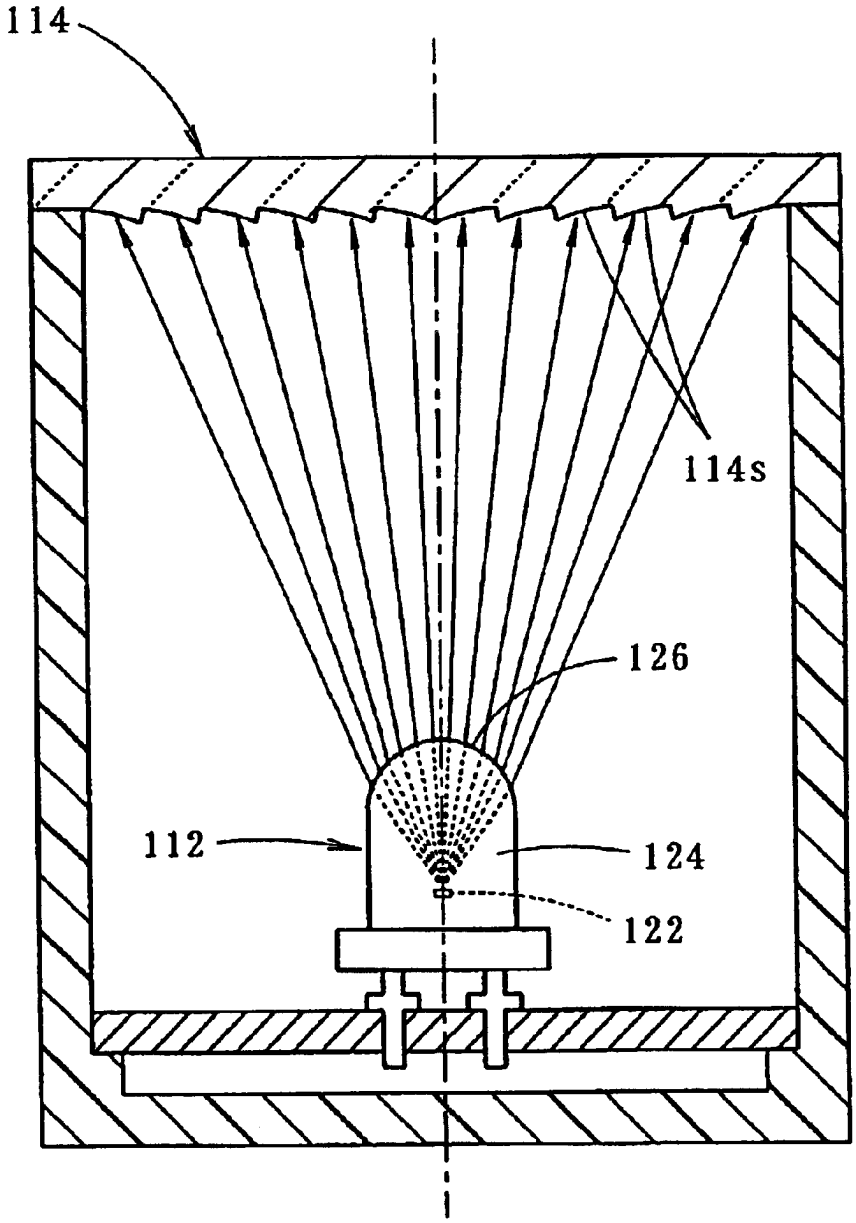

VEHICLE LAMP

BACKGROUND OF THE INVENTION

1. Field of the Invention

The present invention relates to a vehicle lamp that uses, as a light source thereof, a special LED or a custom LED which is different from an ordinary LED.

2. Prior Art

A lamp structure that employs LEDs (light emitting diodes) is often adopted for vehicle lamps such as high-mount stop lamps and the like.

In such a vehicle lamp that uses LEDs, as shown in FIG. **8**, the light from an LED **112** is subjected to a diffusion deflection control by a plurality of lens elements **114***s* formed on a front lens **114** provided in front of the LED **112**. However, since the LED **112** emits only a small amount of light, it is difficult to produce a sufficient amount of illumination light for a vehicle lamp.

More specifically, as seen from FIG. **8**, in an ordinary LED **112**, of the light radiated from an LED chip **122** that is embedded in a bullet-shaped translucent body **124**, the radiation light within a predetermined range of angle with respect to the forward direction of the lamp is used by way of rendering it to be refracted toward the front with the use of a substantially semi-spherical condenser lens **126** that forms the front end portion of the translucent body **124**. However, the light radiated at a great radiation angle with respect to the forward direction becomes stray light and therefore cannot be used for illumination. Accordingly, a vehicle lamp that incorporates the LED **112** as described above cannot easily provide a sufficient amount of illumination light

The alternative is a method in which, instead of an ordinary LED, a special LED **12** as shown in FIG. **7** is used as a light source of a vehicle lamp.

In this special LED **12**, of the light radiated from an LED chip **22** embedded in a translucent block body **24**, the radiation light within a predetermined range of angle with respect to the forward direction is used, as in an ordinary LED, by way of rendering it to be refracted toward the front with the use of a condenser lens **26** that is formed to protrude in a substantially semi-spherical shape from the front end surface **24***a* of the translucent block body **24**. As to the light radiated at a great radiation angle with respect to the forward direction, such is used also by reflecting the light by a portion of the front end surface **24***a* of the translucent block body **24** that is an area around the condenser lens **26** and then reflecting it by a reflector **28** provided inside the translucent block body **24**.

With the use of the special LED **12**, the utilization efficiency of the light radiating from the LED chip **22** increases, and as a result, the amount of light emitted increases also. It becomes thus possible to provide a sufficient illumination light intensity required for vehicle lamps.

However, a mere disposing of a front lens in front of the special LED **12** causes problems.

More specifically, in FIG. **7**, the direct light B**1** passing through the condenser lens **26** does not form a bundle of parallel rays, and it forms a bundle of diffused rays. Accordingly, the direct light B**1** starts to intersect with the reflection light B**2**, which is from the reflector **28**, at a position Po that is some distant in front of the special LED **12**.

As a result, when the front lens is disposed at a position Pf that is greatly apart from the special LED **12**, the front lens has an overlapped incidence area where the overlapped direct light B**1** and reflection light B**2** are incident. Therefore, in the overlapped incidence area, the direct light B**1** and the reflection light B**2** are inevitably subjected to the same diffusion deflection control. However, the direct light B**1** and the reflection light B**2** have different directions of incidence on the front lens, and the direct light B**1** has a greater luminous intensity than the reflection light B**2**. Thus, the problem is that a diffusion deflection control on light from the special LED **12** by means of the front lens cannot be done appropriately.

Conversely, if the front lens is disposed at a position Pn that is closer to the special LED **12**, the direct light B**1** and the reflection light B**2** impinge on the front lens without any intersection, so that the front lens has a no-light impinging area where no light from the special LED **12** is incident. The no-light impinging area appears as a ring-shaped dark area when the lamp is on. Thus, the problem is that the appearance of the lamp is degraded.

SUMMARY OF THE INVENTION

Accordingly, the present invention is to solve the problems described above.

It is an object of the present invention to provide a vehicle lamp that includes a special LED or a custom LED wherein the lamp is capable of appropriately performing diffusion deflection control on the light from the special LED by means of a front lens without degrading the appearance of the lamp.

The present invention achieves the object by contriving the layout of a front lens.

More specifically, the above object is accomplished by a unique structure of the present invention for a vehicle lamp that includes a special LED, which is a light source, and a front lens, which is provided in front of the special LED and performs a diffusion deflection control of light from the special LED by a plurality of lens elements formed on the front lens; and in the present invention,

the special LED is comprised of a translucent block body, an LED chip embedded in the translucent block body, a condenser lens protruded in a substantially semi-spherical shape on the front end surface of the translucent block body and positioned in front of the LED chip, and a reflector provided inside the translucent block body so as to forwardly reflect the light originated by the LED chip and reflected by a portion of the front end surface of the translucent block body that is a peripheral area of the condenser lens; and

the front lens is disposed near a position where the direct light from the LED chip and passing through the condenser lens and a reflection light reflected by the reflector start to intersect with each other.

The front lens can take any structure in terms of layout and shape of each lens element formed thereon as long as the front lens is designed so that the light from the special LED is subjected to a diffusion deflection control by the lens elements.

Each lens element can be a lens element that merely has a function of diffusing incident light or be a lens element that merely has a function of deflecting the incident light. Furthermore, it can be a lens element that has functions to diffuse and deflect the incident light.

In the vehicle lamp of the present invention, the special LED, which is the light source, is comprised of a translucent block body, an LED chip embedded in the translucent block

body, a condenser lens protruded in a substantially semi-spherical shape on the front end surface of the translucent block body and positioned in front of the LED chip, and a reflector provided inside the translucent block body so as to forwardly reflect the light originated by the LED chip and reflected by a portion of the front end surface of the translucent block body that is an area around the condenser lens. Accordingly, the light irradiated from the LED chip in directions within a predetermined range of angle with respect to the front of the LED chip is refracted toward the front by the condenser lens and can be used for illumination, and in addition the light radiating at great radiation angles with respect to the forward direction can be also used as reflection light from the reflector. Accordingly, the use efficiency of the radiation light from the LED chip is improved, and the amount of light emitted is increased. Consequently, the lamp sufficiently provides an amount of illumination light required for a vehicle.

In the vehicle lamp of the present invention, the light from the special LED is subjected to a diffusion deflection control by a plurality of lens elements of the front lens provided in front of the special LED. Since the front lens is disposed near the position where the direct light passing through the condenser lens and the reflection light from the reflector start to intersect with each other, the lamp has various advantages.

Though the direct light and the reflection light differ from each other in the direction of incidence and the intensity, since the front lens is disposed near the position at which the direct light and the reflection light start to intersect with each other, the formation of an overlapped incidence area in the front lens where the overlapped direct and reflection lights is incident is avoided. Thus, it is possible to appropriately perform the diffusion deflection control on the light from the special LED by means of the front lens.

Furthermore, since the front lens is disposed near the position where the direct light and the reflection light start to intersect with each other, the formation of a ring-shaped no-light impinging area in the front lens where no light from the special LED is incident is prevented. Thus, the front lens appears bright over the entire surface when the lamp is on, and appearance degradation of the lamp is prevented.

As seen from the above, according to the present invention, a vehicle lamp that includes a special LED appropriately performs a diffusion deflection control on the light that is from the special LED by means of the front lens without causing any degradation in the appearance of the lamp.

In the meantime, as described above, the direct light passing through the condenser lens has a higher light intensity than the reflection light from the reflector. Therefore, if, of the plurality of lens elements that form the front lens, a lens element positioned in a direct light impinging area where the direct light impinges has a diffusion angle that is set at a value which is greater than a diffusion angle of a lens element positioned in a reflection light impinging area where the reflection light impinges, then the entire front lens appears substantially uniformly bright when the lamp is on. The appearance of the lamp is thus enhanced.

Meanwhile, the borderline between the direct light impinging area and the reflection light impinging area appears in a substantially circular shape on the front lens. Accordingly, if a plurality of lens elements are disposed in a grid pattern, some of the lens elements are positioned on the borderline between the direct light impinging area and the reflection light impinging area. In such a structure, by way of setting the diffusion angle of each lens element positioned on the border line at a diffusion angle that is set for the lens element of the two areas that correspond to one of the direct light and the reflection light that impinges in a greater amount, it becomes possible to perform a sufficiently appropriate diffusion deflection control.

The vehicle lamp of the present invention uses either a single special LED or a plurality of special LEDs as a light source.

When a plurality of special LEDs are employed, they are disposed so as to have an aligned irradiation direction. In this structure that uses a plurality of special LEDs, the front lens includes a plurality of lens elements that perform, for each one of the special LEDs, the diffusion deflection control on the light from the special LEDs. Thus, the front lens appears bright for a broad luminescent area.

Furthermore, it can be designed so that a plurality of special LEDs are disposed in a row and each special LED has a substantially rectangular shape that is elongated in the direction of the row or linear arrangement of the LEDs. With this structure, a thin-type lamp structure suitable for a high-mount stop lamp or the like can easily be produced.

BRIEF DESCRIPTION OF THE DRAWINGS

FIG. **1** is a front view of a vehicle lamp according to one embodiment of the present invention;

FIG. **2** is a sectional view taken long the line **2**—**2** in FIG. **1**, illustrating the vehicle lamp;

FIG. **3** shows the detail of the light path in the structure of FIG. **2**;

FIG. **4** is an exploded perspective view of the vehicle lamp of the present invention;

FIG. **5** is a front view of a plurality of lens elements that make a front lens of the vehicle lamp of the present invention;

FIG. **6**(*a*) is a front view of a lamp body with five special LEDs mounted thereon, FIG. **6**(*b*) is a front view of a front lens therefor, and FIG. **6**(*c*) is a front view in which the lamp body and the front lens are assembled into a vehicle lamp;

FIG. **7** shows a single special LED used in the embodiment of the present invention; and

FIG. **8** shows in cross section a conventional vehicle lamp that uses an LED.

DETAILED DESCRIPTION OF THE INVENTION

Embodiments of the vehicle lamp according to the present invention will be described below in detail with reference to the accompanying drawings.

As seen from FIGS. **1** through **4**, the vehicle lamp **10** in the shown embodiment is a small-size lamp unit. A plural number of vehicle lamps **10** can be arrange, for instance, side by side so that they make a marker lamp such as a tail lamp, a stop lamp, etc.

The vehicle lamp **10** includes a special LED **12** as a light source, a front lens **14** that is disposed in front of the special LED **12** and performs diffusion deflection control of the light from the special LED **12** by means of lens elements **14***s* formed thereon, a printed circuit board **16** supporting the special LED **12** thereon, and a lamp body **18** that contains the printed circuit board **16** and the special LED **12** and supports at a front end surface thereof the front lens **14**.

The special LED **12** is a custom LED assembly that is comprised of a translucent block body **20** and LED chip **22**

embedded in the translucent block body **24**, a condenser lens **26** protruded in a substantially semi-spherical shape on the front end surface **24***a* of the translucent block body **24** so as to be located in front of the LED chip **22**, and a reflector **28** that reflects the light that is from the LED chip **22** and is, as best seen from FIG. **2**, reflected (internally reflected) from the portion of the front end surface **24***a* of the translucent block body **24** that is located around the condenser lens **26**.

The special LED **12** has a substantially rectangular shape that is elongated in a lateral (horizontal) direction in the front view of the lamp (see FIG. **1**) and is disposed so that the LED chip **22** is positioned on a lamp optical axis Ax that extends in a front-back direction (or in the direction of the depth) of the lamp (see FIG. **2**).

The light which is from the LED chip **22** and is incident upon the condenser lens **26** is refracted toward the lamp optical axis Ax. Accordingly, the direct light B**1** passing through the condenser lens **26** forms a bundle of diffuse rays expanding in a conical shape about the lamp optical axis Ax. On the other hand, the reflection light B**2** from the reflector **28** forms a ring-shaped bundle of diffuse rays expanding about a conical plane with the lamp optical axis Ax being a center axis. The direct light B**1** forms a bundle of rays with higher light intensity than the reflection light B**2**.

The direct light B**1** and the reflection light B**2** start to intersect with each other at a position Po (see also FIG. **7**) that is at a predetermined distance in front of the front end surface **24***a* of the translucent block body **24**.

The front lens **14** is, as best seen from FIGS. **2** and **3**, disposed near the position Po at which the direct light B**1** and the reflection light B**2** start to intersect with each other. A plurality of lens elements **14***s* that are formed on the front lens **14** are disposed in a grid pattern on the rear surface of the front lens **14**. The lens elements **14***s* diffuse and deflect the light from the special LED **12** toward the lamp optical axis Ax.

Of the lens elements **14***s*, lens elements **14***s***1** located in an direct light impinging area A**1** where the direct light B**1** impinges has a diffusion angle that is set at a greater value than the diffusion angle of lens elements **14***s***2** located in a reflection light impinging area A**2** where the reflection light B**2** impinges. For example, the diffusion angle of the lens elements **14***s***1** is set at 8° in the upward, downward, left and right directions from an axis parallel to the lamp optical axis Ax, and the diffusion angle of the lens elements **14***s***2** is set at 3° in the upward, downward, left and right directions from an axis parallel to the lamp optical axis Ax.

As seen from FIG. **5**, a plurality of lens elements **14***s* are formed on the front lens **14**.

The borderline BL between the direct light impinging area A**1** and the reflection light impinging area A**2** appears in a substantially circular shape on the front lens **14**. Accordingly, some lens elements such as those referred to as the reference numerals **14***s***3** and **14***s***4** are located on the borderline BL. Accordingly, the diffusion angle of each of the lens elements **14***s***3** and **14***s***4** is set at a diffusion angle set for the lens element of the areas that correspond to either one of the direct light B**1** and the reflection light B**2** that is incident in a greater amount. More specifically, the lens elements **14***s***3** where the direct light B**1** impinges in greater amounts than the reflection light B**2** has a diffusion angle that is equal to the diffusion angle of the lens elements **14***s* **1** located in the direct light impinging area A**1**. The lens elements **14***s***4** where the reflection light B**2** impinges in greater amounts has a diffusion angle that is equal to the diffusion angle of the lens elements **14***s***2** located in the reflection light impinging area A**2**.

As described above, the vehicle lamp **10** in the shown embodiment employs the special LED **12** as the light source; and the light radiating from the LED chip **22** of the special LED **12** in directions within a predetermined range of angle with respect to the forward direction relative to the LED chip **22** is used by way of refracting the light toward the forward direction by the condenser lens **26** of the special LED **12**. Furthermore, the light radiating at great radiation angles with respect to the forward direction can also be utilized as a reflection light from the reflector **28** of the special LED **12**.

Therefore, the radiation light from the LED chip **22** is used efficiently, and the light having an increased intensity is emitted. It becomes thus possible to sufficiently provide an illumination light intensity required for a vehicle.

In the vehicle lamp **10** of the shown embodiment, the light from the special LED **12** is subjected to a diffusion deflection control by a plurality of lens elements **14***s* formed on the front lens **14** that is provided in front of the special LED **12**. Since the front lens **14** is disposed near the position Po where the direct light B**1** passing through the condenser lens **26** and the reflection light B**2** from the reflector **28** start to intersect with each other, the lamp has various advantages.

More specifically, though the direct light B**1** and the reflection light B**2** differ from each other in the direction of incidence and the intensity of light, since the front lens **14** is disposed near the position Po at which the direct light B**1** and the reflection light B**2** start to intersect with each other, the formation of an overlapped incidence area in the front lens where the overlap between the direct light B**1** and the reflection light B**2** is incident is avoided. Accordingly, it becomes possible to appropriately perform the diffusion deflection control on the light from the special LED **12** by the front lens **14**.

Furthermore, since the front lens **14** is disposed near the position Po where the direct light B**1** and the reflection light B**2** start to intersect with each other, it is possible to prevent the formation of a no-light impinging area in the front lens **14** where no light from the special LED **12** is incident. Thus, the front lens **14** appears bright over the entire surface thereof when the lamp is on, and appearance degradation of the lamp is prevented.

Thus, according to the embodiment above, it is possible to appropriately perform the diffusion deflection control on the light from the special LED **12** by means of the front lens **14** without causing any degradation in the appearance of the lamp.

As described above, the direct light B**1** has a higher light intensity than the reflection light B**2**. In the embodiment, however, of the plurality of lens elements **14***s* that are formed on the front lens **14**, the lens elements **14***s***1** positioned in the direct light impinging area A**1** has a diffusion angle that is set at a value which is greater than the diffusion angle of the lens elements **14***s***2** located in the reflection light impinging area A**2**. Accordingly, the entire front lens **14** appears substantially uniformly bright when the lamp is on, and thus the appearance of the lamp is enhanced.

In the above embodiment furthermore, the plurality of lens elements **14***s* that are formed on the front lens **14** are arranged in a grid pattern. As for the lens elements **14***s***3** and **14***s***4** that are positioned on the borderline B**1** between the direct light impinging area A**1** and the reflection light impinging area A**2** that is formed in a substantially circular shape on the front lens **14**, the diffusion angle of each one of the lens elements **14***s***3** and **14***s***4** is set at a diffusion angle which is set for the lens elements disposed in the areas where either one of the direct light B**1** and the reflection light B**2**

impinges in a greater amount. Accordingly, it becomes possible to perform sufficiently appropriate diffusion deflection control.

Modifications of the foregoing embodiment will be next described below with reference to FIGS. **6**(*a*) through **6**(*c*).

In the vehicle lamp **10** of the foregoing embodiment, a single special LED **12** is provided as a light source. In the vehicle lamp **50** in this modification, a plurality (five) of special LEDs **12** are provided.

More specifically, the special LEDs **12** are disposed linearly on one line at equal intervals in a lateral (horizontal) direction and are supported on a common printed circuit board **56**. The special LEDs **12** are disposed so that the irradiation directions are aligned to the same direction. Each special LED **12** is disposed so that the special LED **12** is long in the lateral direction as in the foregoing embodiment.

The printed circuit board **56** is, together with the special LEDs **12**, supported by a lamp body **58**. A front lens **54** is provided on the front end surface of the lamp body **58**.

The front lens **54** has a plurality of lens elements **54***s* that are disposed so as to correspond to the individual special LEDs **12** for diffusion deflection control of the light from the special LEDs **12**. The lens elements **54***s***1**, **54***s***2**, **54***s***3** and **54***s***4** that respectively correspond to the lens elements **14***s***1**, **14***s***2**, **14***s***3** and **14***s***4** of the foregoing embodiment are provided for each special LED **12**.

With the above structure in which a plural number of special LEDs **12** are disposed in the vehicle lamp **50**, the front lens **54** appear bright for a broad luminescent area.

In the vehicle lamp **50** shown in FIGS. **6**(*a*) through **6**(*c*), the special LEDs **12** are disposed linearly on one line at equal intervals in the lateral (horizontal) direction, and each special LED **12** had a substantially rectangular shape that is elongated in the lateral direction. Accordingly, this structure is applicable to a thin-type lamp suited for a high-mount stop lamp or the like.

Instead of the arrangement of the special LEDs **12** in a linear fashion in one row as in the foregoing modification, a plurality of special LEDs **12** can be disposed linearly in a plurality of rows. Furthermore, a plurality of special LEDs **12** can be disposed in one or more rows in an arc or wave shape.

What is claimed is:

1. A vehicle lamp comprising a special LED, which is a light source, and a front lens, which is provided in front of the special LED and performs a diffusion deflection control of light from the special LED by a plurality of lens elements formed on the front lens, wherein

the special LED comprises:

a translucent block body,

an LED chip embedded in the translucent block body,

a condenser lens protruded in a substantially semi-spherical shape on a front end surface of the translucent block body and positioned in front of the LED chip, and

a reflector provided inside the translucent block body and forwardly reflects light that is originated from the LED chip and reflected by a portion of the front end surface of the translucent block body that is a peripheral area of the condenser lens, and wherein

the front lens is disposed near a position where direct light passing through the condenser lens and reflection light from the reflector start to intersect with each other.

2. The vehicle lamp according to claim **1**, wherein of the plurality of lens elements formed on the front lens, a lens element positioned in a direct light impinging area where the direct light impinges has a diffusion angle that is set at a value which is greater than a diffusion angle of a lens element positioned in a reflection light impinging area where the reflection light impinges.

3. The vehicle lamp according to claim **2**, wherein:

the plurality of lens elements are disposed in a grid pattern, and

the diffusion angle of a lens element positioned on a borderline between the direct light impinging area and the reflection light impinging area is set at a diffusion angle that is set for a lens element which is set for a greater impinging amount between the direct light and the reflection light.

4. The vehicle lamp according to claim **3**, wherein:

a plurality of special LEDs are disposed in a manner that the special LEDs have an aligned irradiation direction, and

the front lens is formed with a plurality of lens elements that perform a diffusion deflection control of light from the special LEDs for each one of the special LEDs.

5. The vehicle lamp according to claim **4**, wherein a plurality of special LEDs are disposed in a row, and each of the special LEDs has a substantially rectangular shape that is elongated in a direction of the row arrangement of the LEDs.

6. The vehicle lamp according to claim **1**, wherein:

a plurality of special LEDs are disposed in a manner that the special LEDs have an aligned irradiation direction, and

the front lens is formed with a plurality of lens elements that perform a diffusion deflection control of light from the special LEDs for each one of the special LEDs.

7. The vehicle lamp according to claim **6**, wherein a plurality of special LEDs are disposed in a row, and each of the special LEDs has a substantially rectangular shape that is elongated in a direction of the row arrangement of the LEDs.

8. The vehicle lamp according to claim **2**, wherein:

a plurality of special LEDs are disposed in a manner that the special LEDs have an aligned irradiation direction, and

the front lens is formed with a plurality of lens elements that perform a diffusion deflection control of light from the special LEDs for each one of the special LEDs.

9. The vehicle lamp according to claim **8**, wherein a plurality of special LEDs are disposed in a row, and each of the special LEDs has a substantially rectangular shape that is elongated in a direction of the row arrangement of the LEDs.

* * * * *

PTO/SB/06 (09-11)
Approved for use through 1/31/2014. OMB 0651-0032
U.S. Patent and Trademark Office; U.S. DEPARTMENT OF COMMERCE
Under the Paperwork Reduction Act of 1995, no persons are required to respond to a collection of information unless it displays a valid OMB control number.

PATENT APPLICATION FEE DETERMINATION RECORD Substitute for Form PTO-875	Application or Docket Number 90/014,815	Filing Date	☐ To be Mailed

ENTITY: ☑ LARGE ☐ SMALL ☐ MICRO

APPLICATION AS FILED - PART I

FOR	(Column 1) NUMBER FILED	(Column 2) NUMBER EXTRA		RATE ($)	FEE ($)
☐ BASIC FEE (37 CFR 1.16(a), (b), or (c))	N/A	N/A		N/A	
☐ SEARCH FEE (37 CFR 1.16(k), (i), or (m))	N/A	N/A		N/A	
☐ EXAMINATION FEE (37 CFR 1.16(o), (p), or (q))	N/A	N/A		N/A	
TOTAL CLAIMS (37 CFR 1.16(i))	minus 20 =	*		x $0 =	
INDEPENDENT CLAIMS (37 CFR 1.16(h))	minus 3 =	*		x $0 =	
☐ APPLICATION SIZE FEE (37 CFR 1.16(s))	If the specification and drawings exceed 100 sheets of paper, the application size fee due is $310 ($155 for small entity) for each additional 50 sheets or fraction thereof. See 35 U.S.C. 41(a)(1)(G) and 37 CFR 1.16(s).				
☐ MULTIPLE DEPENDENT CLAIM PRESENT (37 CFR 1.16(j))					
* If the difference in column 1 is less than zero, enter "0" in column 2.				TOTAL	

APPLICATION AS AMENDED - PART II

AMENDMENT	07/29/2021	(Column 1) CLAIMS REMAINING AFTER AMENDMENT		(Column 2) HIGHEST NUMBER PREVIOUSLY PAID FOR	(Column 3) PRESENT EXTRA		RATE ($)	ADDITIONAL FEE ($)
	Total (37 CFR 1.16(i))	* 20	Minus	** 20	= 0		x $100 =	0
	Independent (37 CFR 1.16(h))	* 3	Minus	*** 3	= 0		x $480 =	0
	☐ Application Size Fee (37 CFR 1.16(s))							
	☐ FIRST PRESENTATION OF MULTIPLE DEPENDENT CLAIM (37 CFR 1.16(j))							
							TOTAL ADD'L FEE	0

AMENDMENT		(Column 1) CLAIMS REMAINING AFTER AMENDMENT		(Column 2) HIGHEST NUMBER PREVIOUSLY PAID FOR	(Column 3) PRESENT EXTRA		RATE ($)	ADDITIONAL FEE ($)
	Total (37 CFR 1.16(i))	*	Minus	**	=		x $0 =	
	Independent (37 CFR 1.16(h))	*	Minus	***	=		x $0 =	
	☐ Application Size Fee (37 CFR 1.16(s))							
	☐ FIRST PRESENTATION OF MULTIPLE DEPENDENT CLAIM (37 CFR 1.16(j))							
							TOTAL ADD'L FEE	

* If the entry in column 1 is less than the entry in column 2, write "0" in column 3.	LIE
** If the "Highest Number Previously Paid For" IN THIS SPACE is less than 20, enter "20".	/PATRICIA F LEWIS/
*** If the "Highest Number Previously Paid For" IN THIS SPACE is less than 3, enter "3".	
The "Highest Number Previously Paid For" (Total or Independent) is the highest number found in the appropriate box in column 1.	

This collection of information is required by 37 CFR 1.16. The information is required to obtain or retain a benefit by the public which is to file (and by the USPTO to process) an application. Confidentiality is governed by 35 U.S.C. 122 and 37 CFR 1.14. This collection is estimated to take 12 minutes to complete, including gathering, preparing, and submitting the completed application form to the USPTO. Time will vary depending upon the individual case. Any comments on the amount of time you require to complete this form and/or suggestions for reducing this burden, should be sent to the Chief Information Officer, U.S. Patent and Trademark Office, U.S. Department of Commerce, P.O. Box 1450, Alexandria, VA 22313-1450. DO NOT SEND FEES OR COMPLETED FORMS TO THIS ADDRESS. **SEND TO: Commissioner for Patents, P.O. Box 1450, Alexandria, VA 22313-1450.**

If you need assistance in completing the form, call 1-800-PTO-9199 and select option 2.

UNITED STATES PATENT AND TRADEMARK OFFICE

UNITED STATES DEPARTMENT OF COMMERCE
United States Patent and Trademark Office
Address: COMMISSIONER FOR PATENTS
P.O. Box 1450
Alexandria, Virginia 22313-1450
www.uspto.gov

REEXAM CONTROL NUMBER	FILING OR 371 (c) DATE	PATENT NUMBER
90/014,815	07/30/2021	9955551

CONFIRMATION NO. 6654

REEXAM ASSIGNMENT NOTICE

22045
Brooks Kushman
1000 Town Center
22nd Floor
Southfield, MI 48075

OC000000127600898

Date Mailed: 08/11/2021

NOTICE OF ASSIGNMENT OF REEXAMINATION REQUEST

The above-identified request for reexamination has been assigned to Art Unit 3992. All future correspondence to the proceeding should be identified by the control number listed above and directed to the assigned Art Unit.

A copy of this Notice is being sent to the latest attorney or agent of record in the patent file or to all owners of record. (See 37 CFR 1.33(c)). If the addressee is not, or does not represent, the current owner, he or she is required to forward all communications regarding this proceeding to the current owner(s). An attorney or agent receiving this communication who does not represent the current owner(s) may wish to seek to withdraw pursuant to 37 CFR 1.36 in order to avoid receiving future communications. If the address of the current owner(s) is unknown, this communication should be returned within the request to withdraw pursuant to Section 1.36.

NOTICE OF USPTO EX PARTE REEXAMINATION PATENT OWNER STATEMENT WAIVER PROGRAM

The USPTO has implemented a pilot program where, after a reexamination proceeding has been granted a filing date and before the examiner begins his or her review, the patent owner may orally waive the right to file a patent owner's statement. See *"Pilot Program for Waiver of Patent Owner's Statement in Ex Parte Reexamination Proceedings,"* 75 FR 47269 (August 5, 2010). One goal of the pilot program is to reduce the pendency of reexamination proceedings and improve the efficiency of the reexamination process.

Ordinarily when ex parte reexamination is ordered, the USPTO must wait until after the receipt of the patent owner's statement and the third party requester's reply, or after the expiration of the time period for filing the statement and reply (a period that can be as long as 5 to 6 months), before mailing a first determination of patentability. The USPTO's first determination of patentability is usually a first Office action on the merits or a Notice of Intent to Issue Reexamination Certificate (NIRC).

Under the pilot program, the patent owner's oral waiver allows the USPTO to act on the first determination of patentability immediately after determining that reexamination will be ordered, and in a suitable case issue the reexamination order and the first determination of patentability (which could be a NIRC if the claims under reexamination are confirmed) at the same time.

Benefits to the Patent Owner for participating in this pilot program include reduction in pendency.

To participate in this pilot program, Patent Owners may contact the USPTO's Central Reexamination Unit (CRU) at 571-272-7705. The USPTO will make the oral waiver of record in the reexamination file in an interview summary and a copy will be mailed to the patent owner and any third party requester.

cc: Third Party Requester(if any)

,

/pavolpe/

Legal Instruments Examiner
Central Reexamination Unit 571-272-7705; FAX No. 571-273-9900

UNITED STATES PATENT AND TRADEMARK OFFICE

UNITED STATES DEPARTMENT OF COMMERCE
United States Patent and Trademark Office
Address: COMMISSIONER FOR PATENTS
P.O. Box 1450
Alexandria, Virginia 22313-1450
www.uspto.gov

REEXAM CONTROL NUMBER	FILING OR 371 (c) DATE	PATENT NUMBER
90/014,815	07/30/2021	9955551

CONFIRMATION NO. 6654
REEXAMINATION REQUEST NOTICE

22045
Brooks Kushman
1000 Town Center
22nd Floor
Southfield, MI 48075

OC000000127600896

Date Mailed: 08/11/2021

NOTICE OF REEXAMINATION REQUEST FILING DATE

(Patent Owner Requester)

Requester is hereby notified that the filing date of the request for reexamination is 07/30/2021, the date the required fee was received. (See CFR 1.510(d)).

A decision on the request for reexamination will be mailed within three months from the filing date of the request for reexamination. (See 37 CFR 1.515(a)).

Pursuant to 37 CFR 1.33(c), future correspondence in this reexamination proceeding will be with the latest attorney or agent of the record in the patent file.

The paragraphs checked below are part of this communication:

___ 1. The party receiving the courtesy copy is the latest attorney or agent of record in the patent file.

___ 2. The person named to receive the correspondence in this proceeding has not been made the latest attorney or agent of record in the patent file because:

___ A. Requester's claim of ownership of the patent is not verified by the record.

___ B. The request papers are not signed with a real or apparent binding signature.

___ C. The mere naming of a correspondence addressee does not result in that person being appointed as the latest attorney or agent of record in the patent file.

___ 3. Addressee is the latest attorney or agent of record in the patent file.

___ 4. Other _____

/pavolpe/

Legal Instruments Examiner
Central Reexamination Unit 571-272-7705; FAX No. 571-273-9900

Litigation Search Report CRU 3999

Reexamination Control No. 90/014,815

To:	TRAN, Henry	**From:**	GRAVES, Monica A.
Location:	OCRU	**Location:**	OCRU
Art Unit:	3992	**Phone:**	2-7253
Date:	14 August 2021	**E-mail:**	monica.graves@uspto.gov

Search Notes

US PATENT NO: 9,955,551 - No litigation found.

1. Performed a KeyCite Search in Westlaw, which retrieves all history on the patent including any litigation.
2. Performed a search on the patent in Lexis CourtLink for any open dockets or closed cases.
3. Performed a search in Lexis in the Federal Courts and Administrative Materials databases for any cases found.
4. Performed a search in Lexis in the IP Journal and Periodicals database for any articles on the patent.
5. Performed a search in Lexis in the news databases for any articles about the patent or any articles about litigation on this patent.

Citing References (32)

Treatment	Title	Date	Type	Depth	Headnote(s)
—	**1. SOLID-STATE ILLUMINATING DEVICE FOR USE AS AUTOMATED IRRADIATION DEVICE UTILIZED FOR E.G. GENERAL AND SPECIALITY LIGHTING APPLICATIONS, HAS PROCESSOR PROCESSING SENSED INFORMATION AND DETERMINING ILLUMINATION REQUIREMENTS OF OBJECTS** Out Of Plan DWPI 2012-K77717 ... International Classes (IPC 8):F21S-4/00 International Classes (IPC 1-7):F21S-4/00 Language:English First Derwent Appearance:2016.20 Publication No. (Derwent): US 9955551 B2 Original Title (English):DETECTOR CONTROLLED ILLUMINATING SYSTEM Publication Date:2018-04-24 Application No.:US 357549 Application Date:2012-01-24 Inventor(s ...	July 12, 2002	DWPI	—	—
—	**2. VEHICLE HEADLIGHT BEAM SYSTEM FOR PROVIDING REQUIRED ILLUMINATION TO ENTITIES IN FIELD-OF-VIEW AHEAD OF OPERATOR OR CAMERA-VISION SYSTEM, HAS LOGICAL-CONTROLLER THAT PROCESSES ALGORITHMS AND SENSOR DATA TO DETERMINE REQUIRED ILLUMINATION** Out Of Plan DWPI 2018-692987+ ... 604360 2003-07-14 Application priority US 395306P 2002-07-12 Application priority Earliest Priority Date:2002-07-12 Related:Continuation of US patent number US 9955551 B Continuation In Part of US patent US 8100552 B Previously issued patent number US 2018255622 A Continuation In Part of US patent US ...	July 12, 2002	DWPI	—	—
—	**3. ADAPTIVE HEAD LIGHT SYSTEM FOR MOTOR VEHICLE, HAS PROCESSORS AND MEMORY INSTRUCTIONS TO CONTROL FIRST SEVERAL LED LIGHT SOURCES TO PROVIDE LIGHT BASED ON DETERMINED LIGHT CHANGE AND PRIOR TO MOTOR VEHICLE REACHING ROAD CURVATURE** Out Of Plan DWPI 2021-59687R ... 2002-07-12 Application priority Earliest Priority Date:2002-07-12 Related:Continuation of US patent number US 10894503 B Continuation of US patent number US 9955551 B Continuation In Part of US patent US 8100552 B No. of Countries:1 No. of Patents:1 First Derwent Appearance:2021.051 Latest ...	July 12, 2002	DWPI	—	—
—	**4. PatStat 9955551** ... Patent Status File Patent Number: US 9955551 Change Code: REA Description: Reissue Application Filed Reissue Number:OG Date: 06/02/2020 ...	June 02, 2020	Patent Status Files	—	—

© 2021 Thomson Reuters. No claim to original U.S. Government Works.

Treatment	Title	Date	Type	Depth	Headnote(s)
—	**5. CIRCADIAN RHYTHMS ENTRAINMENT ENHANCEMENT DEVICE** Out Of Plan US PAT 11071187 , U.S. PTO Utility A circadian entrainment enhancement device includes a housing, a first directional light source, a second directional light source, and a driver. During daytime, the driver turns... ... English References Cited US Patents and Applications:US United States US 9854640 B2 2017/12 Hsia H05B 45/60 cited by examiner US United States US 9955551 B2 2018/04 Spero F21S 4/28 cited by examiner US United States US 10420185 B2 2019/09 Biery H05B 47/19 cited by ...	July 20, 2021	Patents	—	—
—	**6. DETECTOR CONTROLLED HEADLIGHT SYSTEM** Out Of Plan US PAT 10894503+ , U.S. PTO Utility An automated headlight system for vehicles replaces the high and low beam with a continuum of beam patterns, with further variable spatial distribution of intensities and color... ... X Tung X Le 2844 Priority Information Related Information:This application is a Continuation of Application No. 13/357,549, filed on 2012/01/24, now Patent No. 9,955,551 US US which is a Continuation-in-part of Application No. 10/604,360, filed on 2003/07/14, now Patent No. 8,100,552 which ...	Jan. 19, 2021	Patents	—	—
—	**7. CORDLESS LED HEADLIGHT AND CONTROL THEREOF** Out Of Plan US PAT 10851981 , U.S. PTO Utility A wireless headlight assembly for attachment to an eyewear frame is disclosed. The wireless headlight assembly comprises a battery pod containing a battery connected to an... ... Feinbloom F21V 23/0471 cited by examiner US United States US 9894733 B1 2018/02 Buthker H05B 47/155 cited by examiner US United States US 9955551 B2 2018/04 Spero B60Q 1/04 cited by examiner US United States US 10132483 B1 2018/11 Feinbloom F21V 23/0471 cited by ...	Dec. 01, 2020	Patents	—	—
—	**8. METHOD OF LIVESTOCK REARING AND A LIVESTOCK SHED** Out Of Plan US PAT 10813191 , U.S. PTO Utility A method of rearing chickens comprises providing a chicken shed (10) having a floor area (12) over which the chickens can move freely. The shed (10) is provided with a plurality of... ... Noble H04N 7/00 cited by examiner US United States US 9807983 B2 2017/11 Yuki A01K 29/005 cited by examiner US United States US 9955551 B2 2018/04 Spero F21K 9/23 cited by examiner US United States US 2004/0158174 A1 2004/08 Tasch 600/587 A61B 5 ...	Oct. 20, 2020	Patents	—	—

© 2021 Thomson Reuters. No claim to original U.S. Government Works.

Treatment	Title	Date	Type	Depth	Headnote(s)
—	**9. SYSTEM AND METHOD FOR THE OPTIMIZATION OF RADIANCE MODELLING AND CONTROLS IN PREDICTIVE DAYLIGHT HARVESTING** Out Of Plan US PAT 10785849 , U.S. PTO Utility In an example, an expected sky condition is calculated for a geographic location, a time of day, and a date based on a mathematical model. A predicted distribution of direct and... ... Kumar G06T 7/194 cited by examiner US United States US 9836557 B2 2017/12 Marceau G06F 30/20 cited by examiner US United States US 9955551 B2 2018/04 Spero B60Q 1/04 cited by examiner US United States US 9955552 B2 2018/04 Ashdown G05B 13/048 cited by ...	Sep. 22, 2020	Patents	—	—
—	**10. MOTOR VEHICLE** Out Of Plan US PAT 10759341 , U.S. PTO Utility A motor vehicle has a central light control unit, a plurality of peripheral light control units distributed within the vehicle, and a plurality of interior light modules, each of... ... 0842 cited by examiner US United States US 8924087 B2 2014/12 Heberer 340/005.72 E05B 77/02 cited by examiner US United States US 9955551 B2 2018/04 Spero B60Q 1/04 cited by examiner US United States US 10195987 B2 2019/02 Berlitz B60Q 3/54 cited by ...	Sep. 01, 2020	Patents	—	—
—	**11. LIGHTING FIXTURE CONFIGURED TO PROVIDE MULTIPLE LIGHTING EFFECTS** Out Of Plan US PAT 10728979 , U.S. PTO Utility A lighting fixture may provide a proximal lighting effect and a distal lighting effect. In some cases, the lighting fixture may include a multi-channel driver and multiple groups... ... van de Ven et al.cited by applicant US United States US 9913343 B1 2018/03 Ciccarelli et al.cited by applicant US United States US 9955551 B2 2018/04 Spero cited by applicant US United States US 10091856 B2 2018/10 Ciccarelli et al.cited by applicant US United States ...	July 28, 2020	Patents	—	—
—	**12. LIGHTING CONTROL CONFIGURATION** Out Of Plan US PAT 10667346 , U.S. PTO Utility A method for configuring a lighting system including one or more sensors for controlling one or more lighting units for providing illumination of an area. The method allows a... ... Chalmers F21V 29/77 cited by examiner US United States US 9610063 B2 2017/04 Foroughi A61B 8/4245 cited by examiner US United States US 9955551 B2 2018/04 Spero B60Q 1/04 cited by examiner US United States US 2013/0145610 A1 2013/06 Feri et al.cited by ...	May 26, 2020	Patents	—	—

© 2021 Thomson Reuters. No claim to original U.S. Government Works.

Treatment	Title	Date	Type	Depth	Headnote(s)
—	**13. INFRARED BASED CONTROLLER FOR RGB LAMP STRIP** Out Of Plan US PAT 10624181 , U.S. PTO Utility The present disclosure discloses an infrared based controller for a RGB lamp strip disposed between a power source and the lamp strip. The controller comprises a first reverse... ... Recker H05B 37/0272 cited by examiner US United States US 9867263 B2 2018/01 Avrahamy H05B 39/086 cited by examiner US United States US 9955551 B2 2018/04 Spero B60Q 1/04 cited by examiner US United States US 10034359 B2 2018/07 Recker H05B 37/0272 cited by ...	Apr. 14, 2020	Patents	—	—
—	**14. PHOTOGRAPHY ENVIRONMENT CONTROL** Out Of Plan US PAT 10574876 , U.S. PTO Utility In implementations of photography environment control, an environment controller is a device that maintains a photography environment map of an environment in which images are... ... Lo H04N 5/2354 cited by examiner US United States US 9942970 B2 2018/04 Green H05B 37/029 cited by examiner US United States US 9955551 B2 2018/04 Spero F21S 41/143 cited by examiner US United States US 9986140 B2 2018/05 Collins H04N 5/2256 cited by ...	Feb. 25, 2020	Patents	—	—
—	**15. RADIANT HEATING SYSTEM INCORPORATING STEERING WHEEL POSITION MONITORING DEVICE** Out Of Plan US PAT 10532629 , U.S. PTO Utility A radiant heating system includes a radiant heating element, a steering wheel position monitoring device and a controller configured to control the radiant heating element in... ... 148 B60R 1/04 cited by examiner US United States US 9873308 B2 2018/01 Moench B60H 1/00742 cited by examiner US United States US 9955551 B2 2018/04 Spero B60Q 1/04 cited by examiner US United States US 9963013 B2 2018/05 Satzger B60H 1/2218 cited by ...	Jan. 14, 2020	Patents	—	—
—	**16. SMART LIGHTING SYSTEM** Out Of Plan US PAT 10524331 , U.S. PTO Utility According to at least one embodiment, a computer-implemented method to illuminate a room is described. At least one person entering the room may be identified. The room may be... ... 05 Recker et al.cited by applicant US United States US 9791872 B2 2017/10 Wang G05D 23/1927 cited by examiner US United States US 9955551 B2 2018/04 Spero cited by applicant US United States US 9983011 B2 2018/05 Mountain cited by applicant US United States US 10206264 ...	Dec. 31, 2019	Patents	—	—

© 2021 Thomson Reuters. No claim to original U.S. Government Works.

Treatment	Title	Date	Type	Depth	Headnote(s)
—	**17. LIGHT FIXTURES AND METHODS** Out Of Plan US PAT 10502374 , U.S. PTO Utility A light fixture, e.g., as an artificial skylight, in which light within a region defined by x, y color coordinates (0.37, 0.34), (0.35, 0.38), (0.15, 0.20), and (0.20, 0.14) exits... ... de Ven et al.cited by applicant US United States US 9915775 B2 2018/03 Krames G02B 6/0073 cited by examiner US United States US 9955551 B2 2018/04 Spero F21S 41/143 cited by examiner US United States US 2007/0139920 A1 2007/06 Van De Ven 362/235 ...	Dec. 10, 2019	Patents	—	—
—	**18. STREET LIGHT SYSTEM AND OPERATION METHOD THEREOF** Out Of Plan US PAT 10506687 , U.S. PTO Utility A street light system and operation method thereof are provided. The street light system includes a master street light device and a slave street light device. The master street... ... 01 Hubbell 362/293 F21S 8/088 cited by examiner US United States US 9900960 B1 2018/02 Lin cited by applicant US United States US 9955551 B2 2018/04 Spero B60Q 1/04 cited by examiner US United States US 10234129 B2 2019/03 Oostdyk F21V 29/83 cited by ...	Dec. 10, 2019	Patents	—	—
—	**19. PHOTOGRAPHY LIGHTING CONTROL** Out Of Plan US PAT 10469723 , U.S. PTO Utility In implementations of photography lighting control, a camera device includes a camera to capture an image of a subject in an environment. The camera device implements an image... ... 9225910 B2 2015/12 Lo cited by applicant US United States US 9942970 B2 2018/04 Green et al.cited by applicant US United States US 9955551 B2 2018/04 Spero cited by applicant US United States US 9986140 B2 2018/05 Collins et al.cited by applicant US United States ...	Nov. 05, 2019	Patents	—	—
—	**20. SYSTEM AND METHOD OF DYNAMIC COLOR ADJUSTMENT** Out Of Plan US PAT 10462875 , U.S. PTO Utility A method for controlling a chromaticity of total light provided by a lighting system includes detecting the total light by a sensor system, determining a component of the total... ... 149 H05B 33/0818 cited by examiner US United States US 9521721 B2 2016/12 Beczkowski H05B 33/0866 cited by examiner US United States US 9955551 B2 2018/04 Spero B60Q 1/04 cited by examiner US United States US 9974141 B2 2018/05 Simonian H05B 33/0872 cited by ...	Oct. 29, 2019	Patents	—	—

© 2021 Thomson Reuters. No claim to original U.S. Government Works.

Treatment	Title	Date	Type	Depth	Headnote(s)
—	**21. STREET LIGHT DEVICE AND OPERATION METHOD THEREOF** Out Of Plan US PAT 10405399 , U.S. PTO Utility A street light device includes a light emitting module, a driving circuit, a sensing module, and a microcontroller. The light emitting module includes a first light emitting unit... ... 293 F21S 8/088 cited by examiner US United States US 9900960 B1 2018/02 Lin H05B 33/0857 cited by examiner US United States US 9955551 B2 2018/04 Spero B60Q 1/04 cited by examiner US United States US 10234129 B2 2019/03 Oostdyk F21V 29/83 cited by ...	Sep. 03, 2019	Patents	—	—
—	**22. LIGHTING APPARATUS INCLUDING PRIMARY AND SECONDARY ILLUMINATION SOURCES AND CIRCUIT CONTROLLING THE SAME** Out Of Plan US PAT 10309596 , U.S. PTO Utility A lighting apparatus is provided that is able to illuminate despite the loss of a primary source of power. In implementation, a controller is provided for determining if a loss of... ... 172 H05B 33/0803 cited by examiner US United States US 9078313 B2 2015/07 Recker H05B 33/0815 cited by examiner US United States US 9955551 B2 2018/04 Spero F21S 41/143 cited by examiner US United States US 2002/0047627 A1 2002/04 Pickering 315/291 H02J 9 ...	June 04, 2019	Patents	—	—
—	**23. INTELLIGENT LUMINAIRE** Out Of Plan US PAT 10314144 , U.S. PTO Utility A luminaire comprising: at least one light source for emitting light to illuminate an environment; an optical sensor comprising an array of photodetectors, the sensor configured to... ... 231 B60Q 1/04 cited by examiner US United States US 9756706 B2 2017/09 Breuer H05B 37/0272 cited by examiner US United States US 9955551 B2 2018/04 Spero B60Q 1/04 cited by examiner US United States US 2012/0019663 A1 2012/01 Raynor cited by applicant US ...	June 04, 2019	Patents	—	—
—	**24. SYNCHRONIZING ACTION EXECUTION ACROSS NETWORKED NODES USING RELATIVE TIME** Out Of Plan US PAT 10305994 , U.S. PTO Utility A way of synchronizing action execution across networked nodes using relative time. A command and a first time value can be received at a first networked device, where the first... ... 11 Nagatsuka et al.cited by applicant US United States US 9860965 B2 2018/01 Recker H05B 37/0272 cited by examiner US United States US 9955551 B2 2018/04 Spero B60Q 1/04 cited by examiner US United States US 10075334 B1 2018/09 Kozura H04L 41/0806 cited by ...	May 28, 2019	Patents	—	—

© 2021 Thomson Reuters. No claim to original U.S. Government Works.

Treatment	Title	Date	Type	Depth	Headnote(s)
—	**25. SYSTEM AND METHOD FOR THE OPTIMIZATION OF RADIANCE MODELLING AND CONTROLS IN PREDICTIVE DAYLIGHT HARVESTING** Out Of Plan US PAT 10289094 , U.S. PTO Utility In an example, an expected sky condition is calculated for a geographic location, a time of day, and a date based on a mathematical model. A predicted distribution of direct and... ... Kumar G06T 7/194 cited by examiner US United States US 9836557 B2 2017/12 Marceau G06F 17/5004 cited by examiner US United States US 9955551 B2 2018/04 Spero B60Q 1/04 cited by examiner US United States US 9955552 B2 2018/04 Ashdown H05B 37/0227 cited by ...	May 14, 2019	Patents	—	—
—	**26. SYSTEM AND METHOD FOR REAL TIME DYNAMIC LIGHTING SIMULATION** Out Of Plan US PAT 10290148 , U.S. PTO Utility Sustainable building lighting and energy modelling and control, and the associated computer graphics, including real-time dynamic lighting simulation, are concerned with: an... ... US 9734433 B1 2017/08 Mysore Vijaya cited by applicant US United States US 9836557 B2 2017/12 Marceau cited by applicant US United States US 9955551 B2 2018/04 Spero cited by applicant US United States US 2005/0041024 A1 2005/02 Green cited by applicant US United States US ...	May 14, 2019	Patents	—	—
—	**27. SYSTEMS AND METHODS OF ILLUMINATION** Out Of Plan US PAT 10240751 , U.S. PTO Utility One or more techniques and/or systems are disclosed for illuminating a target area. Such systems may mitigate shadows and lack of light homogeneity at surgical intervention... ... Elfring F21V 23/0471 cited by examiner US United States US 9587804 B2 2017/03 Chen F21V 14/02 cited by examiner US United States US 9955551 B2 2018/04 Spero F21S 41/143 cited by examiner Abstract One or more techniques and/or systems are disclosed for illuminating a target ...	Mar. 26, 2019	Patents	—	—
—	**28. SMART LIGHTING SYSTEM** Out Of Plan US PAT 10206264 , U.S. PTO Utility According to at least one embodiment, a computer-implemented method to illuminate a room is described. At least one person entering the room may be identified. The room may be... ... 628 F24F 11/30 cited by examiner US United States US 9655217 B2 2017/05 Recker H05B 37/0272 cited by examiner US United States US 9955551 B2 2018/04 Spero B60Q 1/04 cited by examiner US United States US 9983011 B2 2018/05 Mountain G01C 21/206 cited by ...	Feb. 12, 2019	Patents	—	—

© 2021 Thomson Reuters. No claim to original U.S. Government Works.

Treatment	Title	Date	Type	Depth	Headnote(s)
—	**29. METHOD FOR CONTROLLING A TUNABLE WHITE FIXTURE USING A SINGLE HANDLE** Out Of Plan US PAT 10187952 , U.S. PTO Utility A system allows a light fixture to have a wider range of color temperatures (CCT) while limiting the warmest temperature reached at full intensity. The CCT of the light output may... ... de Ven F21V 29/74 cited by examiner US United States US 9913343 B1 2018/03 Ciccarelli et al.cited by applicant US United States US 9955551 B2 2018/04 Spero B60Q 1/04 cited by examiner US United States US 2008/0094000 A1 2008/04 Yamamoto et al.cited by ...	Jan. 22, 2019	Patents	—	—
—	**30. LIGHT EMITTING DIODE DRIVER FOR LOAD CHANGES** Out Of Plan US PAT 10085314 , U.S. PTO Utility A device for regulating a voltage includes a first branch switch, a second branch switch, and a control module. The control module is configured to determine an instruction to... ... 09 Milanesi et al.cited by applicant US United States US 9820343 B1 2017/11 Fragiacomo B60Q 1/04 cited by examiner US United States US 9955551 B2 2018/04 Spero F21S 41/143 cited by examiner US United States US 2016/0227616 A1 2016/08 Lee H05B 33/0815 cited ...	Sep. 25, 2018	Patents	—	—
—	**31. ADAPTIVE HEADLIGHT SYSTEM** Out Of Plan US PAT APP 20210162912+ , U.S. PTO Application A motor vehicle includes headlamps having a plurality of LED light sources, one or more processors, and a memory storing instructions. One or more processors executing the... ... on 2018/04/24, now Patent No. 10,894,503 US US which is a Continuation of Application No. 13/357,549, filed on 2012/01/24, now Patent No. 9,955,551 US US which is a Continuation-in-part of Application No. 10/604,360, filed on 2003/07/14, now Patent No. 8,100,552 which ...	June 03, 2021	Patents	—	—
—	**32. DETECTOR CONTROLLED HEADLIGHT SYSTEM** Out Of Plan US PAT APP 20180255622 , U.S. PTO Application An automated headlight system for vehicles replaces the high and low beam with a continuum of beam patterns, with further variable spatial distribution of intensities and color... ... individual Tifrach, Israel Tifrach israel Priority Information Related Information:This application is a Continuation of Application No. 13/357,549, filed on 2012/01/24, now Patent No. 9,955,551 US US which is a Continuation-in-part of Application No. 10/604,360, filed on 2003/07/14, now Patent No. 8,100,552 which ...	Sep. 06, 2018	Patents	—	—

© 2021 Thomson Reuters. No claim to original U.S. Government Works.

Select Category
Administrative... 0

Results for: 9955551 | Actions

Filters 1 USPTO Patent Decisions: BPAI and ... Clear

Filters 1

Administrative Materials (0)

No documents found in **USPTO Patent Decisions: BPAI and PTAB.**

Try the following:

- Remove one or more filters: **USPTO Patent Decisions: BPAI and PTAB**
- Run your search again in Everything.
- Modify your search (edit or remove some search terms or add synonyms).
- Check for spelling errors.
- Use the options available from the **Actions** menu above to modify your search.
- Note: Some content may not be visible based on the restrictions of your subscription.

LexisNexis
About
Privacy Policy
Cookie Policy
Terms & Conditions
RELX™
Copyright © 2021 LexisNexis.

Results for: Stay and patent-number(9955551) | Actions | Edit Search

Dockets 0

Narrow By

Open **or** Unknown **or** Closed

U.S. Circuit Court of Appeals (United States) **or** United States U.S. District Courts (Civil) **or** U.S. Supreme Court **or** U.S. Patent Trial and Appeals Board

Civil

Clear

Filter Results

Dockets (0)

No documents found in **Dockets** filtered by **Open or Unknown or Closed, U.S. Circuit Court of Appeals (United States) or United States U.S. District Courts (Civil) or U.S. Supreme Court or U.S. Patent Trial and Appeals Board, Civil.**

Try the following:

- Remove one or more filters: **Open or Unknown or Closed** **U.S. Circuit Court of Appeals (United States) or United States U.S. District Courts (Civil) or U.S. Supreme Court or U.S. Patent Trial and Appeals Board** **Civil**
- Modify your search (edit or remove some search terms or add synonyms).
- Check for spelling errors.
- Use the options available from the **Actions** menu above to modify your search.
- Note: Some content may not be visible based on the restrictions of your subscription.

LexisNexis

About Cookie Policy

Privacy Policy Terms & Conditions

RELX™

Copyright © 2021 LexisNexis.

UNITED STATES PATENT AND TRADEMARK OFFICE

UNITED STATES DEPARTMENT OF COMMERCE
United States Patent and Trademark Office
Address: COMMISSIONER FOR PATENTS
P.O. Box 1450
Alexandria, Virginia 22313-1450
www.uspto.gov

BIB DATA SHEET

CONFIRMATION NO. 6654

SERIAL NUMBER	FILING or 371(c) DATE	CLASS	GROUP ART UNIT	ATTORNEY DOCKET NO.
90/014,815	07/30/2021 RULE	315	3992	TRCH0102RX

APPLICANTS

INVENTORS

9955551B2, Residence Not Provided;
YECHEZKAL EVAN SPERO, MOSHAV TIFACH, ISRAEL;
PATENT OWNER, Residence Not Provided;

**** CONTINUING DATA ****************************

This application is a REX of 13/357,549 01/24/2012 PAT 9955551 *
which claims benefit of 61/535,981 09/17/2011
and is a CIP of 10/604,360 07/14/2003 PAT 8100552
which claims benefit of 60/395,308 07/12/2002
(*)Data provided by applicant is not consistent with PTO records.

**** FOREIGN APPLICATIONS *****************************

**** IF REQUIRED, FOREIGN FILING LICENSE GRANTED ****

Foreign Priority claimed ☐ Yes ☐ No 35 USC 119(a-d) conditions met ☐ Yes ☐ No Verified and Acknowledged _____ Examiner's Signature	☐ Met after Allowance _____ Initials	STATE OR COUNTRY	SHEETS DRAWINGS	TOTAL CLAIMS	INDEPENDENT CLAIMS
				23	4

ADDRESS

Brooks Kushman
1000 Town Center
22nd Floor
Southfield, MI 48075
UNITED STATES

TITLE

Detector Controlled Illuminating System

FILING FEE RECEIVED		
12600	FEES: Authority has been given in Paper No._____ to charge/credit DEPOSIT ACCOUNT No._____ for following:	☐ All Fees ☐ 1.16 Fees (Filing) ☐ 1.17 Fees (Processing Ext. of time) ☐ 1.18 Fees (Issue) ☐ Other _____ ☐ Credit

REEXAMINATION TITLE REPORT (AKA PATENT ASSIGNMENT ABSTRACT OF TITLE)

TYPE OF REEXAMINATION: XX EX PARTE *INTER PARTES*

REEXAM CONTROL NO.: 90/014,815

SERIAL NUMBER : 13/357,549 FILING DATE 01/24/2012

PATENT NUMBER: 9,955,551 ISSUE DATE 04/24/2018

FIRST *THREE* INVENTORS' NAMES: YECHEZKAL E. SPERO

ET. AL?: Y XN

CONTINUITY DATA (IF ANY) :

__ THIS IS (OR) A CON __DIV CIP A PROVISIONAL APPLICATION ___OTHER OF SERIAL NUMBER FILED ON . STATUS: PATENTED WITH PATENT NUMBER OR__PENDING, OR XABANDONED (*EXPIRED* FOR PROVISIONALS).

__ WHICH IS A CON, DIV, CIP, PROVISIONAL, OR ___OTHER, OF SERIAL NUMBER FILED ON. STATUS: PATENTED, WITH PATENT NUMBER AND SERIAL NUMBER FILED PENDING, OR ABANDONED.

__ WHICH IS A CON, DIV, CIP A PROVISIONAL APPLICATION ___OTHER OF SERIAL NUMBER FILED ON. STATUS: PATENTED WITH PATENT NUMBER: OR__PENDING, OR ABANDONED.

__ WHICH IS A CON, DIV, CIP A PROVISIONAL APPLICATION ___OTHER OF SERIAL NUMBER FILED ON. STATUS: PATENTED WITH PATENT NUMBER: OR__PENDING, OR ABANDONED.

__ WHICH IS A CON, DIV, CIP A PROVISIONAL APPLICATION ___OTHER OF SERIAL NUMBER FILED ON. STATUS: PATENTED WITH PATENT NUMBER: OR__PENDING, OR ABANDONED.

__ WHICH IS A CON, DIV, CIP A PROVISIONAL APPLICATION ___OTHER OF SERIAL NUMBER FILED ON. STATUS: PATENTED WITH PATENT NUMBER: OR__PENDING, OR ABANDONED.

X__WHICH IS A CIP OF SERIAL NUMBER 10/604,360 FILED ON 07/14/2003. STATUS: PATENTED, WITH PATENT NUMBER 8,100,552.

ET AL

ASSIGNMENT RECORD DATA

THE ASSIGNMENT RECORDS REVEAL THAT THE TITLE REPORT APPEARS TO BE VESTED IN:

xxxINVENTOR(S): TIFRACH ISRAEL

___AS ENDORSED:

___AS THE RECORD STANDS, THE PATENT WHEN GRANTED WILL ISSUE IN THE NAME OF THE INVENTOR(S)

___LEGAL REPRESENTATIVE:

___SECURITY ASSIGNMENT/LICENSEE(PLEASE NOTE THAT THE OWNERSHIP OF THE PATENT IS STILL REFLECTED IN THE *ASSIGNOR*. THE *ASSIGNEE* IN THIS CASE CANNOT OWN THE PATENT. (SEE ACCOMPANYING PAGES, IF ANY.)

___WHEN THE ASSIGNMENT IS RECORDED, THE PATENT SHOULD BELONG TO:

___OTHER: REEL NO: FRAME NO.: DATE RECORDED: // COMPANY NAME:
CITY AND STATE OR COUNTRY: .

___NOTES/COMMENTS: Please see section 306 of the Manual of Patent Examining Procedure regarding the *Assignment of a Division, Continuation, Substitute, and Continuation-in-Part in Relation to Parent Application.*

EXAMINED UP TO AND INCLUDING THIS CERTIFICATE DATED AND SIGNED: 08/20/2021

LEGAL INSTRUMENTS EXMR., OFFICE OF PATENT LEGAL ADMIN., CENTRAL REEXAMINATION UNIT

TO ANY PRINTERS: THE REEXAMINATION TITLE REPORT DOES NOT HAVE TO HAVE THE STREET ADDRESS OF THE OWNER(S). IF THERE IS ANY INQUIRY, PLEASE NOTIFY THE PERSON ABOVE.

UNITED STATES PATENT AND TRADEMARK OFFICE

UNITED STATES DEPARTMENT OF COMMERCE
United States Patent and Trademark Office
Address: COMMISSIONER FOR PATENTS
P.O. Box 1450
Alexandria, Virginia 22313-1450
www.uspto.gov

APPLICATION NO.	FILING DATE	FIRST NAMED INVENTOR	ATTORNEY DOCKET NO.	CONFIRMATION NO.
90/014,815	07/30/2021	9955551B2	TRCH0102RX	6654

22045 7590 09/20/2021
Brooks Kushman
1000 Town Center
22nd Floor
Southfield, MI 48075

EXAMINER
TRAN, HENRY N

ART UNIT	PAPER NUMBER
3992	

MAIL DATE	DELIVERY MODE
09/20/2021	PAPER

Please find below and/or attached an Office communication concerning this application or proceeding.

The time period for reply, if any, is set in the attached communication.

Order Granting Request For Ex Parte Reexamination	**Control No.** 90/014,815	**Patent Under Reexamination** 9955551	
	Examiner Henry Tran	**Art Unit** 3992	**AIA (FITF) Status** No

--The MAILING DATE of this communication appears on the cover sheet with the correspondence address--

The request for *ex parte* reexamination filed 07/30/2021 has been considered and a determination has been made. An identification of the claims, the references relied upon, and the rationale supporting the determination are attached.

Attachments: a)☑ PTO-892, b)☐ PTO/SB/08, c)☐ Other: ____

1. ☑ The request for *ex parte* reexamination is GRANTED.

RESPONSE TIMES ARE SET AS FOLLOWS:

For Patent Owner's Statement (Optional): TWO MONTHS from the mailing date of this communication (37 CFR 1.530 (b)). **EXTENSIONS OF TIME ARE GOVERNED BY 37 CFR 1.550(c).**

For Requester's Reply (optional): TWO MONTHS from the **date of service** of any timely filed Patent Owner's Statement (37 CFR 1.535). **NO EXTENSION OF THIS TIME PERIOD IS PERMITTED.** If Patent Owner does not file a timely statement under 37 CFR 1.530(b), then no reply by requester is permitted.

/HENRY N TRAN/ Primary Examiner, Art Unit 3992	/ANGELA M LIE/ Primary Examiner, Art Unit 3992	

cc:Requester (if third party requester)

I. DECISION ON REQUEST

1. A substantial new question (SNQ) of patentability affecting claim 6 of U.S. Patent No. 9,955,551 B2 issued on April 24, 2018 to Yechezkal Evan Spero entitled "DETECTOR CONTROLLED ILLUMINATING SYSTEM" ("the '551 patent") are raised by the Request for *Ex Parte* Reexamination of claim 6 of the '551 patent under 35 U.S.C. § 302 and 37 C.F.R. § 1.510 filed on July 30, 2021 ("the Request") by the Patent Owner ("Requester").

2. For the reasons set forth below, the Examiner has determined that the prior art patents and printed publication cited in the Request raise a SNQ of patentability regarding claim 6 of the '551 patent. Therefore, the Request is GRANTED. Claim 6 will be reexamined.

3. Under 37 C.F.R. § 1.510 (e), the Patent Owner filed with the Request a proposed amendment in accordance with § 1.530 for adding new claims 24-87. MPEP § 2221 states "The decision on the Request will be made on the basis of the patent claims as though the proposed amendment had not been presented. However, if the request for reexamination is granted, all subsequent reexamination prosecution and examination should be on the basis of the claims as amended. Accordingly, since the request for reexamination of claim 6 is granted by this order, the '551 patent claim 6 and newly added claims 24-87 will be reexamed and/or examed.

II. THE REQUEST

1. <u>Cited Prior Art References</u>

The prior art patents and printed publications, or non-prior art patents under 37 CFR 1.510(b)(3), see form PTO/SB/08a, submitted with the Request and cited in the proposed rejections, see also pages i, 12, and 20 of the Request, are re-listed as follows.

(1) WO 01/70538 A2 filed on March 20, 2001 (PCT/US01/08912) by Stam et al., and is published on September 27, 2001, (hereinafter "**Stam et al.**", or "**Stam PCT**"), (Ex. PA-A).

(2) U.S. Pat. No. 6,406,172 B1 issued on Jun. 148, 2002 to Harbers et al. (hereinafter "**Harbers**" or "**the '172 patent**"), (Ex. PA-B).

None of the above-identified prior art patent and printed publication were considered during prosecution of the '551 patent.

2. Other exhibits and supporting documents

Other exhibits and supporting documents, i.e., OTH-A through OTH-H and Exhibits 1 through 11 or evidence under 37 CFR 1.510(b)(3), see pages iii-v of the Request, submitted with the Request for providing explanation supports of the Requester's SNQ of patentability, newly added claims, and/or the pertinency and manner of applying the cited prior art references to claim 6 for which reexamination is requested, or the '551 patent prosecution history, are hereby acknowledged and fully considered as appropriate.

3. Substantial New Question (SNQ) of Patentability

Under rule 37 CFR 1.510 (b)(1), the Request, see page i and pages 35, identified the following substantial new question (SNQ) of patentability.

SNQ: **The Stam PCT and Harbers combination raises a SNQ of patentability regarding claim 6 of the '551 patent.**

4. Proposed Rejections

Under rule 37 CFR 1.510 (b)(2), the Request identified the following proposed grounds of rejection of claim 6 of the '551 patent for supporting the SNQ. Particularly, Stam PCT and Harbers, each teaches certain limitations of the '551 patent claim 6; and thus, the combination of Stam PCT and Harbers raises a substantial new question of patentability of claim 6, see pages 36-37.

III. THE '551 PATENT AND ITS PROSECUTION HISTORY

1. The '551 patent related applications

- The '551 patent, entitled "Detector Controlled Illuminating System," issued on April 24, 2018 to inventor Yechezkal Evan Spero and is unassigned.
- U.S. Patent Application which led to the '551 patent is the U.S. patent application No. 13/357,549 ("the '549 app"), which was filed on January 24, 2012, and is a continuation-in-part of application No. 10/604,360 filed on Jul. 14, 2003, now U.S. Patent No. 8,100,552 (parent patent) with a priority date of July 12, 2002. (Ex. PAT-A).
- U.S. Patent Application 15/961,861 filed on April 24, 2018, now U.S. Patent No. 10,894,503 issued on January 19, 2021 is a continuation of the '551 patent.
- U.S. Patent Application 16/858,342 filed on April 24, 2020 is a broadening reissue application of the '551 patent and is currently pending. This broadening reissue application currently includes a total of 44 claims, including claim 6 of the original '551 patent, which is also included in this reexamination request. Accordingly, If this request for ex parte reexamination results in a determination and order for ex parte reexamination under 35 U.S.C. § 1.525, it will result in concurrent office proceedings. Merger of the reissue and ex parte reexamination proceedings will be considered as appropriate. 37 C.F.R. § 1.565 and MPEP § 2285.

▪ U.S. Patent Application 17/152,399 filed on Jan. 19, 2021, which is a continuation of U.S. Patent No. 10,894,503, is pending.

2. The '551 patent

The '551 patent relates to an illuminating device (system) coupled with sensors or an image acquisition device and a logical controller allows illumination intensity and spectrum to be varied according to changing user needs. The device provides illumination to areas according to the principles of correct lighting practice for the optimal performance of visual tasks in the most efficient, cost effective manner. Aspects of the invention include lighting fixtures, which adapt to ambient lighting, movement, visual tasks being performed, and environmental and personal conditions affecting illumination requirements at any given instant. Lighting fixtures having spatial distribution of spectrum and intensity, providing both "background" room lighting, and "task" lighting. See Abstract, Figs. e.g., 1, 12, 15, 22, and 29-32, col. 13:10-23, and col. 45:45 to col. 46:37.

3. Prosecution history of the '551 patent

A brief summary of the most relevant portions of the '549 app prosecution is as follows.

● On August 15, 2016, a Non-Final Rejection was sent out, *inter alia*, rejecting claims 1, 2, 5-7, 19, 21 and 25, objecting claims 3, 4, 20, and 22-24, and indicating claims 8-18 allowable. Particularly, claims 1, 2, 5-7, 19, 21 and 25, including claim 6, were rejected under pre-AIA 35 U.S.C. § 102(e) as being anticipated by Kuhlman et al. (US 2012/0287493).

● On January 16, 2017 and August 1, 2017, Applicant filed Amendments and pointed out that: (i) the Kuhlman et al. reference (US 2012/0287493) is a disqualified prior art reference under 35 U.S.C. § 102 because it was filed on May 12, 2011, which is after the '551 patent's priority date of July 14, 2003, which is the filing date of the '551 patent's parent patent (U.S. Patent No. 8,100,552), see pages 9-12 of the Jan. 16, 2017 Amendment; and (ii) with respect to claim 6, Figs. 12, 18, 20A, 22 and 31 and ¶s [0183] and [0308] of the '549 app disclosure describe the limitations of claim 6, see pages 9-10 of the August 1, 2017 Amendment, which are not taught by Kuhlman.

● On August 11, 2017, a Final Office action was sent out, *inter alia*, rejecting claims 19 and 25, objecting claims 20-24, and indicating claims 1-18 allowable. The Examiner's reasons for allowance of claims 1-18 was provided in the previous Office actions, see pages 4-5 of the August 11, 2017 Office action, pages 5-6 of the Office action mailed on May 1, 2017, and pages 7-8 of the Office action mailed on August 15, 2016.

● On November 13, 2017, Applicant filed an AF amendments maintaining original claims 1-18 and 21, canceling claims 20 and 25, amending claims 19 and 22-24 to include the allowable subject matters recited in claim 20, and arguing that the rejections of claims 19 and 25 under Pre-AIA 35 USC 102(e) as being anticipated by Mueller et al. (US 2004/0052076) have been overcome, see page 10 of the November 13, 2017 AF amendment.

● On December 19, 2017, a Notice of Allowance was sent out indicating that all pending claims 1-19 and 21-24 are allowed and providing the reasons for allowance of claims 19 and 21-24, and indicating the reasons for allowance of claims 1-18 were provided in the previous office action subject matter, see pages 2-3 of the December 19, 2017 Notice of Allowance.

● On April 24, 2018, the '549 app was issued as the '551 patent having a total of 23 claims. Of which, claims 1, 6, 8, and 19 are independent claims. See the '551 patent claims. Ex. PAT-A. Accordingly, based on the prosecution history of the '551 patent, and with respect to claim 6, the claim is allowable because the closest prior art references, i.e., Kuhlman et al. (US 2012/0287493) and/or Mueller et al. (US 2004/0052076), are either disqualified as a prior art reference or fail to teach or suggest one or more of the following elements and/or limitations "a structure", "one or more light sources", "electronic circuitry apparatus", "one or more cameras placed on the structure for detecting coordinate-specific information about the illuminated area", and "a controller" recited in claim 6.

● The '551 patent base **claim 6** is repeated below.

6. An illuminating device having automatic control of the light provided to an illuminated area comprising:

a structure for incorporating illuminating device elements;

one or more light sources incorporated in the structure and in communication with a power source;

electronic circuitry apparatus for the controlled powering of the light source and other illuminating device elements;

one or more cameras placed on the structure for detecting coordinate-specific information about the illuminated area, said camera in communication with power and control device elements;

a controller integrated with the structure, in communication with the light source controlling

power circuitry, said controller arranged to [sic] processes the information communicated from the camera and automatically control the light provided to the illuminated area.

IV. ANALYSIS OF THE SNQ

1. Criteria for Deciding Ex Parte Reexamination Request Filed under 35 U.S.C. § 302

● The presence or absence of "a substantial new question of patentability" determines whether or not reexamination is ordered.

● For "a substantial new question of patentability" to be present, it is only necessary that: (A) the prior art patents and/or printed publications raise a substantial question of patentability regarding at least one claim, i.e., the teaching of the (prior art) patents and printed publications is such that a reasonable examiner would consider the teaching to be important in deciding whether or not the claim is patentable; and (B) the same question of patentability as to the claim has not been decided by the Office in an earlier concluded examination or review of the patent, raised to or by the Office in a pending reexamination or supplemental examination of the patent, or decided in a final holding of invalidity (after all appeals) by a federal court in a decision on the merits involving the claim. MPEP § 2242.I.

2. Analysis

SNQ: **The Stam PCT and Harbers combination raises a SNQ of patentability regarding claim 6 of the '551 patent.**

It is agreed that the consideration of the combination of Stam PCT and Harbers raises a SNQ as to Claim 6 of the '551 patent.

Stam PCT (Ex. PA-A)

● Stam PCT (WO 01/70538 A2), filed on March 20, 2001, and was published on September 27, 2001, which was more than a year before the priority date of July 12, 2002 of the parent patent U.S. Patent No. 8,100,552 of the '551 patent. Accordingly, Stam PCT qualifies as a prior art reference under 35 U.S.C. § 102(b).

● Stam PCT is directed to an illuminating system (400) and method of automatically controlling exterior vehicle lights includes an image sensor (201) and a controller (1105) to generate control signals. The control signals are derived based on information obtained from the image sensor as well as other detected parameters pertaining to the detected light source(s), the vehicle having the inventive control system, and the ambient environment. The control circuit may simply turn certain exterior lights on or off, or change the brightness, aim, focus, etc. to produce various beam patterns that maximize the illuminated area in front of the vehicle without causing excessive glare in the eyes of other drivers. Ex. PA-A at Abstract, and Fig. 11.

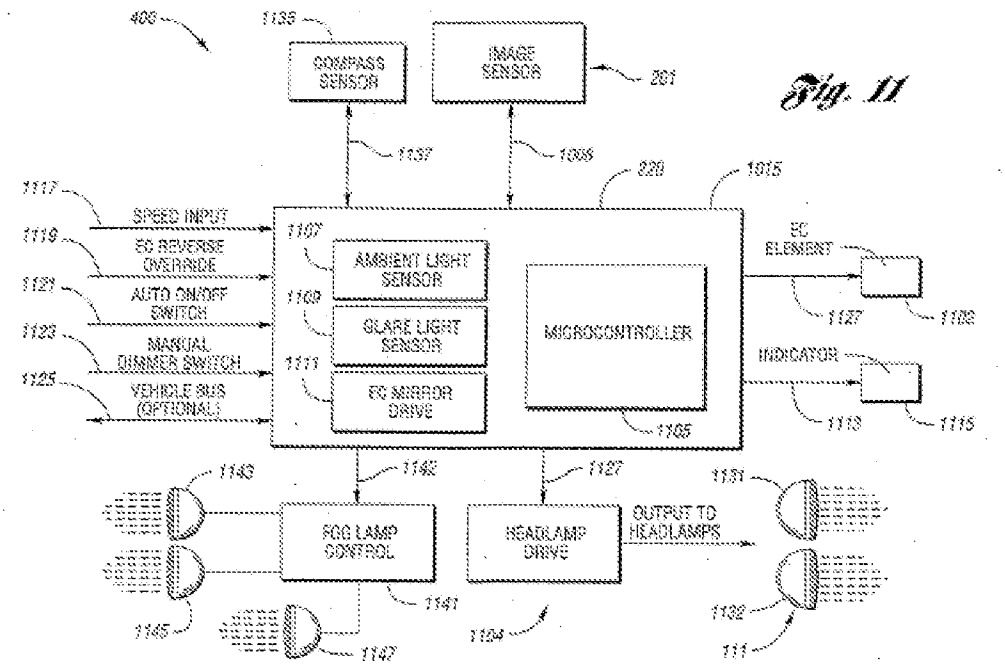

● Stam PCT teaches the following elements and/or limitations of claim 6 including:

a structure for incorporating illuminating device elements (Stam PCT teaches a controller vehicle 100 for incorporating illuminating device elements comprising exterior lights, e.g., headlamps 1131, 1132, a control system comprising a controller 1015, an image sensor 201, etc.), Ex. PA-A at Abstract, and Figs. 1 and 11;

one or more light sources incorporated in the structure and in communication with a power source (Stam PCT teaches the use of LED headlamps 2600 having emitter 2603 and 2605 connected to an electrical connection for operation), Ex. PA-A at Figs. 26a and 26b, and pages 73-74;

one or more cameras placed on the structure for detecting coordinate-specific information about the illuminated area, said camera in communication with power and control device elements (Stam PCT teaches the control system comprises an image array sensor including a plurality of pixels, an optical system configured to image the scene forward of the controlled vehicle onto the image array sensor, the optical system including a forward most surface, and a control circuit for processing the image of the scene obtained from the image array sensor and for controlling the exterior lights in response to objects detected in the processed scene.), Ex. PA-A at 2-3; and

a controller integrated with the structure, in communication with the light source controlling power circuitry, said controller arranged to [sic] processes the information communicated from the camera and automatically control the light provided to the illuminated area (Stam PCT teaches a system for automatically controlling exterior vehicle lights comprising an image sensor (201) and a controller (1105) to general control signals. The control signals are derived on information obtained from the image sensor as well as other detected parameters pertaining to

the detected light source(s), the vehicle having the inventive control system, and the ambient environment. (Ex. PA-A at Abstract). The control system comprises an image array sensor including a plurality of pixels, an optical system configured to image the scene forward of the controlled vehicle onto the image array sensor, the optical system including a forward most surface, and a control circuit for processing the image of the scene obtained from the image array sensor and for controlling the exterior lights in response to objects detected in the processed scene. Ex. PA-A at 5.

Harbers (U.S. Pat. No. 6,406,172)

● Harbers (U.S. Pat. No. 6,406,172), filed on Jun. 22, 2000, and was issued on Jun. 18, 2002, which was before the priority date of July 12, 2002 of the parent patent U.S. Patent No. 8,100,552 of the '551 patent. Accordingly, Harbers qualifies as a prior art reference under 35 U.S.C. § 102(e).

● Harbers is directed to a headlamp and dynamic lighting system for vehicles (1), *id.* Fig. 1. The system includes a light source (4, 5) comprising a plurality of opto-electronic elements (11, 12, 13, 14), preferably LEDs, *id.* Figs. 1-3. Wherein, the spatial distribution of the light beam (6, 6', …; 7, 7', …) generated by the light source is continuously adjustable based on the speed of the vehicle, the rotational position of the steering wheel of the vehicle, the weather conditions, and it can also be influenced by the driver. Preferably, the spectral characteristics of the light beam generated by the light source depend on the position in the light beam. The light beam comprises at least two beam segments (6, 6',..; 7, 7',..) having essentially different spectral characteristics, *id.* at Abstract. Ex. PA-B.

● Harbers teaches the controlled powering of the light source (Harbers teaches the use of a plurality of opto-electronic elements, e.g., LEDs 11, 12, 13, 14, with a relatively high luminous flux enables a vehicle headlamp to be manufactured having much more dynamic lighting possibilities than the known vehicle headlamp, *id*. Ex. PA-B at Figs. 1-2, and 2:6-9. Particularly, by controlled powering of the light source by switching on or off one or more opto-electronic elements at specific limiting values of the velocity of the vehicles, the weather condition, etc., the overall spatial distribution of the light is changed.), *id*. Ex. PA-B at Figs. 3-4, and 3:24-27, and 3:43-53. Accordingly, Harbers teaches the controlled powering of the light source for continuously adjustable spatial distribution of the light emitted by the vehicle headlamps in response to a specific set of defined inputs including the velocity of the vehicle, the weather condition, etc. However, Harbers doesn't disclose any sensor capable of detecting objects or targets in the illuminated area.

Accordingly, the combination of Stam PCT and Harbers teaches the elements and limitations of "a structure", "one or more light sources", "electronic circuitry apparatus", "one or more cameras placed on the structure for detecting coordinate-specific information about the illuminated area", and "a controller" recited in claim 6.

The combination of Stam PCT and Harbers references was never discussed by the Office in an earlier concluded examination or review of the patent, raised to or by the Office in a pending reexamination or supplemental examination of the patent, or decided in a final holding of invalidity (after all appeals) by a federal court in a decision on the merits involving the claims.

The teachings of Stam PCT and Harbers present a new, non-cumulative technological teaching that was not previously considered in the prosecution of the application which became

the '551 patent. Furthermore, there is a substantial likelihood that a reasonable examiner would consider the teachings of Stam PCT and Harbers important in deciding whether or not claim 6 is patentable. Accordingly, the combination of Stam PCT and Harbers references raises a SNQ as to claim 6 of the '551 patent.

Therefore, it is agreed that the consideration of the combination of Stam PCT and Harbers references raises a SNQ as to Claim 6 of the '551 patent.

V. CONCLUSION

1. A substantial new questions of patentability affecting claim 6 of the '551 patent is raised by the Request for *ex parte* reexamination. The Request for *ex parte* reexamination is GRANTED. Claim 6 of the '551 patent will be reexamined.

2. Extensions of time under 37 CFR 1.136(a) will not be permitted in these proceedings because the provisions of 37 CFR 1.136 apply only to "an applicant" and not to parties in a reexamination proceeding. Additionally, 35 U.S.C. 305 requires that reexamination proceedings "will be conducted with special dispatch" (37 CFR 1.550(a)). Extensions of time in ex parte reexamination proceedings are provided for in 37 CFR 1.550(c). See MPEP § 2265.

The Patent Owner is reminded of the continuing responsibility under 37 CFR 1.565(a) to apprise the Office of any litigation activity or other prior or concurrent proceeding, involving the '551 patent throughout the course of this reexamination proceeding. See MPEP §§ 2207, 2282 and 2286.

3. Service of Papers

Any paper filed with the USPTO, i.e., any submission made, by either the Patent Owner or the Third Party Requester must be served on every other party in the reexamination proceeding, including any other third party requester that is part of the proceeding due to merger of the reexamination proceedings. As proof of service, the party submitting the paper to the Office must attach a Certificate of Service to the paper, which sets forth the name and address of the party served and the method of service. Papers filed without the required Certificate of Service may be denied consideration. See MPEP 2666.06, and 37 CFR 1.903.

4. Correspondence and Inquiry as to Office Actions

All correspondence related to this ex parte reexamination proceeding should be directed as follows:

By EFS: Registered users may submit via the electronic filing system EFS-Web, at https://efs.uspto.gov/efile/myportal/efs-registered

By Mail to: Mail Stop *Ex Parte* Reexam
Central Reexamination Unit
Commissioner for Patents
United States Patent & Trademark Office
P.O. Box 1450
Alexandria, VA 22313-1450

By FAX to: (571) 273-9900
Central Reexamination Unit

By hand: Customer Service Window
Randolph Building
401 Dulany Street
Alexandria, VA 22314

For EFS-Web transmissions, 37 CFR 1.8(a)(1)(i)(C) and (ii) states that correspondence (except for a request for reexamination and a corrected or replacement request for reexamination) will be considered timely filed if (a) it is transmitted via the Office's electronic filing system in

accordance with 37 CFR 1.6(a)(4), and (b) includes a certificate of transmission for each piece of correspondence stating the date of transmission, which is prior to the expiration of the set period of time in the Office action.

Any inquiry concerning this communication should be directed to the Central Reexamination Unit at telephone number (571) 272-7705.

Information regarding the status of an application may be obtained from the Patent Application Information Retrieval (PAIR) system. Status information for published applications may be obtained from either Private PAIR or Public PAIR. Status information for unpublished applications is available through Private PAIR only. For more information about the PAIR system, see http://pair-direct.uspto.gov. Should you have questions on access to the Private PAIR system, contact the Electronic Business Center (EBC) at 866-217-9197 (toll-free). If you would like assistance from a USPTO Customer Service Representative or access to the automated information system, call 800-786-9199 (IN USA OR CANADA) or 571-272-1000.

Signed:

/HENRY N TRAN/
Primary Examiner, Art Unit 3992

September 12, 2021

Conferees:

/ANGELA M LIE/
Primary Examiner, Art Unit 3992

/ANDREW J. FISCHER/
Supervisory Patent Reexamination Specialist, Art Unit 3992

Reexamination	Application/Control No.	Applicant(s)/Patent Under Reexamination
	90/014,815	9955551B2
	Certificate Date	Certificate Number

Requester Correspondence Address: ☑ **Patent Owner** ☐ **Third Party**

Brooks Kushman
1000 Town Center
22nd Floor
Southfield, MI 48075

LITIGATION REVIEW ☑	HT (examiner initials)	14 August 2021 (date)
Case Name		Director Initials
No		

COPENDING OFFICE PROCEEDINGS	
TYPE OF PROCEEDING	NUMBER

Doc code: IDS
Doc description: Information Disclosure Statement (IDS) Filed

PTO/SB/08a (02-18)
Approved for use through 11/30/2020. OMB 0651-0031
U.S. Patent and Trademark Office; U.S. DEPARTMENT OF COMMERCE
Under the Paperwork Reduction Act of 1995, no persons are required to respond to a collection of information unless it contains a valid OMB control number.

INFORMATION DISCLOSURE STATEMENT BY APPLICANT

(Not for submission under 37 CFR 1.99)

Application Number	
Filing Date	
First Named Inventor	Yechezkal Evan Spero
Art Unit	N/A
Examiner Name	N/A
Attorney Docket Number	TRCH0102RX

U.S.PATENTS

Examiner Initial*	Cite No	Patent Number	Kind Code[1]	Issue Date	Name of Patentee or Applicant of cited Document	Pages,Columns,Lines where Relevant Passages or Relevant Figures Appear
	1	3,316,442	A	1967-04-25	Konrad	
	2	6,406,172	B1	2002-06-18	Harbers et al.	
	3	6,587,573	B1	2003-07-01	Stam et al.	
	4	6,861,809	B2	2005-03-01	Stam	

If you wish to add additional U.S. Patent citation information please click the Add button.

U.S.PATENT APPLICATION PUBLICATIONS

Examiner Initial*	Cite No	Publication Number	Kind Code[1]	Publication Date	Name of Patentee or Applicant of cited Document	Pages,Columns,Lines where Relevant Passages or Relevant Figures Appear
	1					

If you wish to add additional U.S. Published Application citation information please click the Add button.

FOREIGN PATENT DOCUMENTS

Examiner Initial*	Cite No	Foreign Document Number[3]	Country Code[2] i	Kind Code[4]	Publication Date	Name of Patentee or Applicant of cited Document	Pages,Columns,Lines where Relevant Passages or Relevant Figures Appear	T[5]

ALL REFERENCES CONSIDERED EXCEPT WHERE LINED THROUGH. /H.N.T/

INFORMATION DISCLOSURE STATEMENT BY APPLICANT (Not for submission under 37 CFR 1.99)	Application Number	
	Filing Date	
	First Named Inventor	Yechezkal Evan Spero
	Art Unit	N/A
	Examiner Name	N/A
	Attorney Docket Number	TRCH0102RX

	1	2001070538	WO	A2	2001-09-27	Stam et al.		☐
	2							☐

If you wish to add additional Foreign Patent Document citation information please click the Add button

NON-PATENT LITERATURE DOCUMENTS

Examiner Initials*	Cite No	Include name of the author (in CAPITAL LETTERS), title of the article (when appropriate), title of the item (book, magazine, journal, serial, symposium, catalog, etc), date, pages(s), volume-issue number(s), publisher, city and/or country where published.	T[5]
	1		☐

If you wish to add additional non-patent literature document citation information please click the Add button

EXAMINER SIGNATURE

Examiner Signature	/HENRY N TRAN/	Date Considered	09/08/2021

*EXAMINER: Initial if reference considered, whether or not citation is in conformance with MPEP 609. Draw line through a citation if not in conformance and not considered. Include copy of this form with next communication to applicant.

[1] See Kind Codes of USPTO Patent Documents at www.USPTO.GOV or MPEP 901.04. [2] Enter office that issued the document, by the two-letter code (WIPO Standard ST.3). [3] For Japanese patent documents, the indication of the year of the reign of the Emperor must precede the serial number of the patent document. [4] Kind of document by the appropriate symbols as indicated on the document under WIPO Standard ST.16 if possible. [5] Applicant is to place a check mark here if English language translation is attached.

ALL REFERENCES CONSIDERED EXCEPT WHERE LINED THROUGH. /H.N.T/

INFORMATION DISCLOSURE STATEMENT BY APPLICANT (Not for submission under 37 CFR 1.99)		
	Application Number	
	Filing Date	
	First Named Inventor	Yechezkal Evan Spero
	Art Unit	N/A
	Examiner Name	N/A
	Attorney Docket Number	TRCH0102RX

CERTIFICATION STATEMENT

Please see 37 CFR 1.97 and 1.98 to make the appropriate selection(s):

☐ That each item of information contained in the information disclosure statement was first cited in any communication from a foreign patent office in a counterpart foreign application not more than three months prior to the filing of the information disclosure statement. See 37 CFR 1.97(e)(1).

OR

☐ That no item of information contained in the information disclosure statement was cited in a communication from a foreign patent office in a counterpart foreign application, and, to the knowledge of the person signing the certification after making reasonable inquiry, no item of information contained in the information disclosure statement was known to any individual designated in 37 CFR 1.56(c) more than three months prior to the filing of the information disclosure statement. See 37 CFR 1.97(e)(2).

☐ See attached certification statement.

☐ The fee set forth in 37 CFR 1.17 (p) has been submitted herewith.

☒ A certification statement is not submitted herewith.

SIGNATURE

A signature of the applicant or representative is required in accordance with CFR 1.33, 10.18. Please see CFR 1.4(d) for the form of the signature.

Signature	/Sangeeta G. Shah/	Date (YYYY-MM-DD)	2021-07-30
Name/Print	Sangeeta G. Shah	Registration Number	38,614

This collection of information is required by 37 CFR 1.97 and 1.98. The information is required to obtain or retain a benefit by the public which is to file (and by the USPTO to process) an application. Confidentiality is governed by 35 U.S.C. 122 and 37 CFR 1.14. This collection is estimated to take 1 hour to complete, including gathering, preparing and submitting the completed application form to the USPTO. Time will vary depending upon the individual case. Any comments on the amount of time you require to complete this form and/or suggestions for reducing this burden, should be sent to the Chief Information Officer, U.S. Patent and Trademark Office, U.S. Department of Commerce, P.O. Box 1450, Alexandria, VA 22313-1450. DO NOT SEND FEES OR COMPLETED FORMS TO THIS ADDRESS. **SEND TO: Commissioner for Patents, P.O. Box 1450, Alexandria, VA 22313-1450.**

Privacy Act Statement

The Privacy Act of 1974 (P.L. 93-579) requires that you be given certain information in connection with your submission of the attached form related to a patent application or patent. Accordingly, pursuant to the requirements of the Act, please be advised that: (1) the general authority for the collection of this information is 35 U.S.C. 2(b)(2); (2) furnishing of the information solicited is voluntary; and (3) the principal purpose for which the information is used by the U.S. Patent and Trademark Office is to process and/or examine your submission related to a patent application or patent. If you do not furnish the requested information, the U.S. Patent and Trademark Office may not be able to process and/or examine your submission, which may result in termination of proceedings or abandonment of the application or expiration of the patent.

The information provided by you in this form will be subject to the following routine uses:

1. The information on this form will be treated confidentially to the extent allowed under the Freedom of Information Act (5 U.S.C. 552) and the Privacy Act (5 U.S.C. 552a). Records from this system of records may be disclosed to the Department of Justice to determine whether the Freedom of Information Act requires disclosure of these record s.

2. A record from this system of records may be disclosed, as a routine use, in the course of presenting evidence to a court, magistrate, or administrative tribunal, including disclosures to opposing counsel in the course of settlement negotiations.

3. A record in this system of records may be disclosed, as a routine use, to a Member of Congress submitting a request involving an individual, to whom the record pertains, when the individual has requested assistance from the Member with respect to the subject matter of the record.

4. A record in this system of records may be disclosed, as a routine use, to a contractor of the Agency having need for the information in order to perform a contract. Recipients of information shall be required to comply with the requirements of the Privacy Act of 1974, as amended, pursuant to 5 U.S.C. 552a(m).

5. A record related to an International Application filed under the Patent Cooperation Treaty in this system of records may be disclosed, as a routine use, to the International Bureau of the World Intellectual Property Organization, pursuant to the Patent Cooperation Treaty.

6. A record in this system of records may be disclosed, as a routine use, to another federal agency for purposes of National Security review (35 U.S.C. 181) and for review pursuant to the Atomic Energy Act (42 U.S.C. 218(c)).

7. A record from this system of records may be disclosed, as a routine use, to the Administrator, General Services, or his/her designee, during an inspection of records conducted by GSA as part of that agency's responsibility to recommend improvements in records management practices and programs, under authority of 44 U.S.C. 2904 and 2906. Such disclosure shall be made in accordance with the GSA regulations governing inspection of records for this purpose, and any other relevant (i.e., GSA or Commerce) directive. Such disclosure shall not be used to make determinations about individuals.

8. A record from this system of records may be disclosed, as a routine use, to the public after either publication of the application pursuant to 35 U.S.C. 122(b) or issuance of a patent pursuant to 35 U.S.C. 151. Further, a record may be disclosed, subject to the limitations of 37 CFR 1.14, as a routine use, to the public if the record was filed in an application which became abandoned or in which the proceedings were terminated and which application is referenced by either a published application, an application open to public inspections or an issued patent.

9. A record from this system of records may be disclosed, as a routine use, to a Federal, State, or local law enforcement agency, if the USPTO becomes aware of a violation or potential violation of law or regulation.

UNITED STATES PATENT AND TRADEMARK OFFICE

UNITED STATES DEPARTMENT OF COMMERCE
United States Patent and Trademark Office
Address: COMMISSIONER FOR PATENTS
P.O. Box 1450
Alexandria, Virginia 22313-1450
www.uspto.gov

APPLICATION NO.	FILING DATE	FIRST NAMED INVENTOR	ATTORNEY DOCKET NO.	CONFIRMATION NO.
90/014,815	07/30/2021	9955551B2	TRCH0102RX	6654

22045 7590 10/07/2021
Brooks Kushman
1000 Town Center
22nd Floor
Southfield, MI 48075

EXAMINER
TRAN, HENRY N

ART UNIT	PAPER NUMBER
3992	

MAIL DATE	DELIVERY MODE
10/07/2021	PAPER

Please find below and/or attached an Office communication concerning this application or proceeding.

The time period for reply, if any, is set in the attached communication.

Ex Parte Reexamination Interview Summary – Pilot Program for Waiver of Patent Owner's Statement	Control No. 90/014,815	Patent Under Reexamination is Requested 9955551	
	Examiner TRAN	Art Unit 3992	AIA (FITF) Status No

-- The MAILING DATE of this communication appears on the cover sheet with the correspondence address. --

All participants (USPTO official and patent owner):

(1) MANUEL SALDANA, CRU (3) _____

(2) SANGEETA SHAH, REG 38614 (4) _____

Date of Telephonic Interview: 06 October 2021.

A. The USPTO official requested waiver of the patent owner's statement pursuant to the pilot program for waiver of patent owner's statement in *ex parte* reexamination proceedings.*

☑ The patent owner **agreed** to waive its right to file a patent owner's statement under 35 U.S.C. 304 in the event reexamination is ordered for the above-identified patent.

☐ The patent owner **did not agree** to waive its right to file a patent owner's statement under 35 U.S.C. 304 at this time.

☐ USPTO personnel were unable to reach the patent owner.**

B. The Patent Owner of record telephoned the Office and indicated they would like to participate in the pilot program for waiver of patent owner's statement in *ex parte* reexamination proceedings.*

☐ The Patent owner of record telephoned the Office and **agreed** to waive its right to file a patent owner's statement under 35 U.S.C. 304 in the event reexamination is ordered for the above-identified patent.

The patent owner is not required to file a written statement of this telephone communication under 37 CFR 1.560(b) or otherwise. However, any disagreement as to this interview summary must be brought to the immediate attention of the USPTO, and no later than one month from the mailing date of this interview summary. Extensions of time are governed by 37 CFR 1.550(c).

*For more information regarding this pilot program, see *Pilot Program for Waiver of Patent Owner's Statement in Ex Parte Reexamination Proceedings, 75 Fed. Reg.* 47269 (August 5, 2010), available on the USPTO Web site at http://www.uspto.gov/patents/law/notices/2010.jsp.

**The patent owner may contact the USPTO personnel at (571) 272-7705 or at the telephone number provided below if the patent owner decides to waive the right to file a patent owner's statement under 35 U.S.C. 304.

/MANUEL SALDANA/ (571)272-7740

Signature and telephone number of the USPTO official, who contacted, was contacted by, or attempted to contact the patent owner.

cc: Requester (if third party requester)

UNITED STATES PATENT AND TRADEMARK OFFICE

UNITED STATES DEPARTMENT OF COMMERCE
United States Patent and Trademark Office
Address: COMMISSIONER FOR PATENTS
P.O. Box 1450
Alexandria, Virginia 22313-1450
www.uspto.gov

APPLICATION NO.	FILING DATE	FIRST NAMED INVENTOR	ATTORNEY DOCKET NO.	CONFIRMATION NO.
90/014,815	07/30/2021	9955551B2	TRCH0102RX	6654

22045 7590 03/16/2022
Brooks Kushman
1000 Town Center
22nd Floor
Southfield, MI 48075

EXAMINER
TRAN, HENRY N

ART UNIT	PAPER NUMBER
3992	

MAIL DATE	DELIVERY MODE
03/16/2022	PAPER

Please find below and/or attached an Office communication concerning this application or proceeding.

The time period for reply, if any, is set in the attached communication.

Office Action in Ex Parte Reexamination	Control No. 90/014,815	Patent Under Reexamination 9955551	
	Examiner Henry Tran	Art Unit 3992	AIA (FITF) Status No

-- The MAILING DATE of this communication appears on the cover sheet with the correspondence address --

a. ☑ Responsive to the communication(s) filed on 30 July 2021.
☐ A declaration(s)/affidavit(s) under **37 CFR 1.130(b)** was/were filed on _____.

b. ☐ This action is made FINAL.

c. ☐ A statement under 37 CFR 1.530 has not been received from the patent owner.

A shortened statutory period for response to this action is set to expire 2 month(s) from the mailing date of this letter. Failure to respond within the period for response will result in termination of the proceeding and issuance of an *ex parte* reexamination certificate in accordance with this action. 37 CFR 1.550(d). **EXTENSIONS OF TIME ARE GOVERNED BY 37 CFR 1.550(c).** If the period for response specified above is less than thirty (30) days, a response within the statutory minimum of thirty (30) days will be considered timely.

Part I THE FOLLOWING ATTACHMENT(S) ARE PART OF THIS ACTION:

1. ☐ Notice of References Cited by Examiner, PTO-892.
2. ☑ Information Disclosure Statement, PTO/SB/08.
3. ☐ Interview Summary, PTO-474.
4. ☐ _____.

Part II SUMMARY OF ACTION

1a. ☑ Claims 6 and 24-87 are subject to reexamination.

1b. ☑ Claims 1-5 and 7-23 are not subject to reexamination.

2. ☐ Claims _____ have been canceled in the present reexamination proceeding.

3. ☑ Claims 24-87 are patentable and/or confirmed.

4. ☑ Claims 6 are rejected.

5. ☐ Claims _____ are objected to.

6. ☐ The drawings, filed on _____ are acceptable.

7. ☐ The proposed drawing correction, filed on _____ has been (7a) ☐ approved (7b) ☐ disapproved.

8. ☐ Acknowledgment is made of the priority claim under 35 U.S.C. 119(a)-(d) or (f).

a) ☐ All b) ☐ Some* c) ☐ None of the certified copies have

1 ☐ been received.

2 ☐ not been received.

3 ☐ been filed in Application No. _____.

4 ☐ been filed in reexamination Control No. _____.

5 ☐ been received by the International Bureau in PCT application No. _____.

* See the attached detailed Office action for a list of the certified copies not received.

9. ☐ Since the proceeding appears to be in condition for issuance of an *ex parte* reexamination certificate except for formal matters, prosecution as to the merits is closed in accordance with the practice under *Ex parte* Quayle, 1935 C.D. 11, 453 O.G. 213.

10. ☐ Other: _____

cc: Requester (if third party requester)

EX PARTE REEXAMINATION
DETAILED NON-FINAL OFFICE ACTION

I. Summary of Proceedings

1. A Request pursuant to the provisions of 35 U.S.C. § 302-307 and 37 CFR § 1.510 *et seq*. for ex parte reexamination of Claim 6 of U.S. Pat. No. 9,955,551 B1 ("the '551 patent") issued on April 24, 2018 to Yechezkal Evan Spero ("Spero") entitled "DETECTOR CONTROLLED ILLUMINATING SYSTEM" was filed on July 30, 2021 ("the Request") by Patent Owner and inventor Spero.

2. A substantial new question (SNQ) of patentability affecting Claim 6 of the '551 patent has been found and the Order granting ex parte reexamination of Claim 6 of the '551 patent was mailed to the Patent Owner on September 20, 2021.

3. The time, TWO MONTHS from the mailing date of September 20, 2021 of the Order, for Patent Owner to file a statement under 37 CFR 1.530 (b) has expired. See MPEP § 2249. The ex parte reexamination proceeding is being conducted in accordance with 37 CFR 1.550. See MPEP § 2254.

4. Under 35 U.S.C. 302 and 37 CFR 1.510(e), the Patent Owner filed a proposed amendment with the Request, see Exhibits OTH-C and OTH-D. MPEP § 2221. The proposed amendment complies with the format and requirements of 37 CFR 1.530(d) through (j); and it has been entered in the reexamination file record. Claim 6 is original, claims 24-87 are new. Thus, claims 6 and 24-87 are pending or "live" claims. Of which, claims 6, 24, 32, 40, 48, 56, 64, 72, and 80 are nine (9) independent claims. Claims 6 and 24-87 are being reexamined/examined in this Office action.

5. Although the Office action will treat proposed amendment as though it has been entered, the proposed amendment will not be effective until the reexamination certificate is issued and published, 37 CFR 1.530(k). MPEP § 2234.

6. Claim 6 is rejected, and Claims 24-87 are patentable.

II. Prior Art References

1. The prior art patents and printed publications, or non-prior art patents under 37 CFR 1.510(b)(3), see form PTO/SB/08a, submitted with the Request and cited in the proposed rejections, see also pages i, 12, and 20 of the Request, are re-listed as follows.

> (1) WO 01/70538 A2 filed on March 20, 2001 (PCT/US01/08912) by Stam et al., and is published on September 27, 2001, (hereinafter "**Stam et al.**", or "**Stam PCT**"), (Ex. PA-A).
>
> (2) U.S. Pat. No. 6,406,172 B1 issued on Jun. 148, 2002 to Harbers et al. (hereinafter "**Harbers**" or "**the '172 patent**"), (Ex. PA-B).

2. None of the above-identified prior art patent and printed publication were considered during original prosecution of the '551 patent.

III. Claim Interpretation

1. The following is a quotation of 35 U.S.C. 112(f):

> (f) Element in Claim for a Combination. – An element in a claim for a combination may be expressed as a means or step for performing a specified function without the recital of structure, material, or acts in support thereof, and such claim shall be construed to cover the corresponding structure, material, or acts described in the specification and equivalents thereof.

The following is a quotation of pre-AIA 35 U.S.C. 112, sixth paragraph:

> An element in a claim for a combination may be expressed as a means or step for performing a specified function without the recital of structure, material, or acts in support thereof, and such claim shall be construed to cover the corresponding structure, material, or acts described in the specification and equivalents thereof.

2. This application includes one or more claim limitations that do not use the word "means," but are nonetheless being interpreted under 35 U.S.C. 112(f) or pre-AIA 35 U.S.C. 112, sixth paragraph, because the claim limitation(s) uses a generic placeholder that is coupled with functional language without reciting sufficient structure to perform the recited function and the

generic placeholder is not preceded by a structural modifier. Such claim limitation(s) is/are: "electronic circuit apparatus" in claims 6, 24, 32, 40, 48, 56, 64, 72, and 80.

Because this/these claim limitation(s) is/are being interpreted under 35 U.S.C. 112(f) or pre-AIA 35 U.S.C. 112, sixth paragraph, it/they is/are being interpreted to cover the corresponding structure described in a preferred embodiment as "logic control electronics unit 7", *id.* at Fig. 1, and col. 25:35-50, in the specification as performing the claimed function, and equivalents thereof.

If applicant does not intend to have this/these limitation(s) interpreted under 35 U.S.C. 112(f) or pre-AIA 35 U.S.C. 112, sixth paragraph, applicant may: (1) amend the claim limitation(s) to avoid it/them being interpreted under 35 U.S.C. 112(f) or pre-AIA 35 U.S.C. 112, sixth paragraph (e.g., by reciting sufficient structure to perform the claimed function); or (2) present a sufficient showing that the claim limitation(s) recite(s) sufficient structure to perform the claimed function so as to avoid it/them being interpreted under 35 U.S.C. 112(f) or pre-AIA 35 U.S.C. 112, sixth paragraph.

IV. Claim Rejections - 35 USC § 102

1. In the event the determination of the status of the application as subject to AIA 35 U.S.C. 102 and 103 (or as subject to pre-AIA 35 U.S.C. 102 and 103) is incorrect, any correction of the statutory basis for the rejection will not be considered a new ground of rejection if the prior art relied upon, and the rationale supporting the rejection, would be the same under either status.

2. The following is a quotation of the appropriate paragraphs of pre-AIA 35 U.S.C. 102 that form the basis for the rejections under this section made in this Office action:

> A person shall be entitled to a patent unless –

(b) the invention was patented or described in a printed publication in this or a foreign country or in public use or on sale in this country, more than one year prior to the date of application for patent in the United States.

3. **Claim 6** is rejected under pre-AIA 35 U.S.C. 102(b) as being anticipated by **Stam PCT** (PCT/US01/08912).

Regarding claim 6, Stam PCT teaches an illuminating system **400** having automatic controlling of the light provided to an illuminated area (automatically controlling of the exterior lights provided to regions of the field of view directly in front of a vehicle), *id.* Ex. PA-A at Abstract, and pages 2-3, comprising:

● a structure (a vehicle) **100** for incorporating illuminating device elements (headlamps) 111 or **1131**, **1132**, (a microcontroller or controller) **1015**, an image sensor **201**, etc. (Stam PCT teaches a controlled vehicle 100 for incorporating illuminating device elements comprising exterior lights, e.g., headlamps 111 or 1131, 1132, a controller 1015, an image sensor 201, etc.), *id.* Ex. PA-A at Abstract, and Figs. 1 and 11;

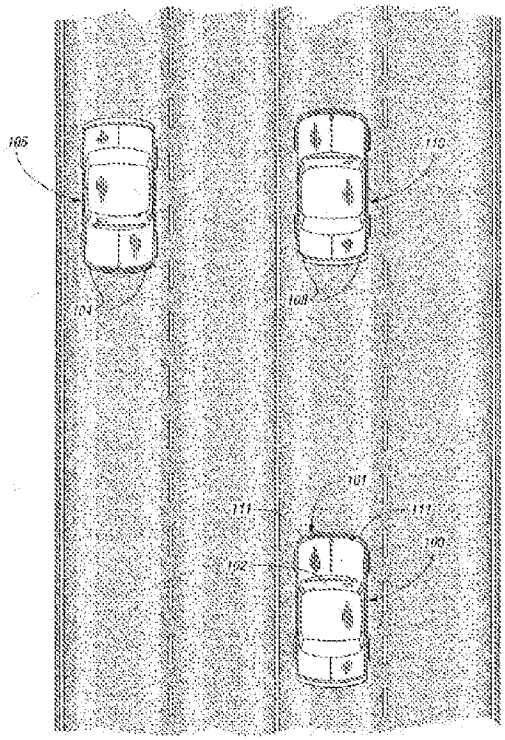

Fig. 1

Fig. 1 illustrates vehicles traveling on a common road.

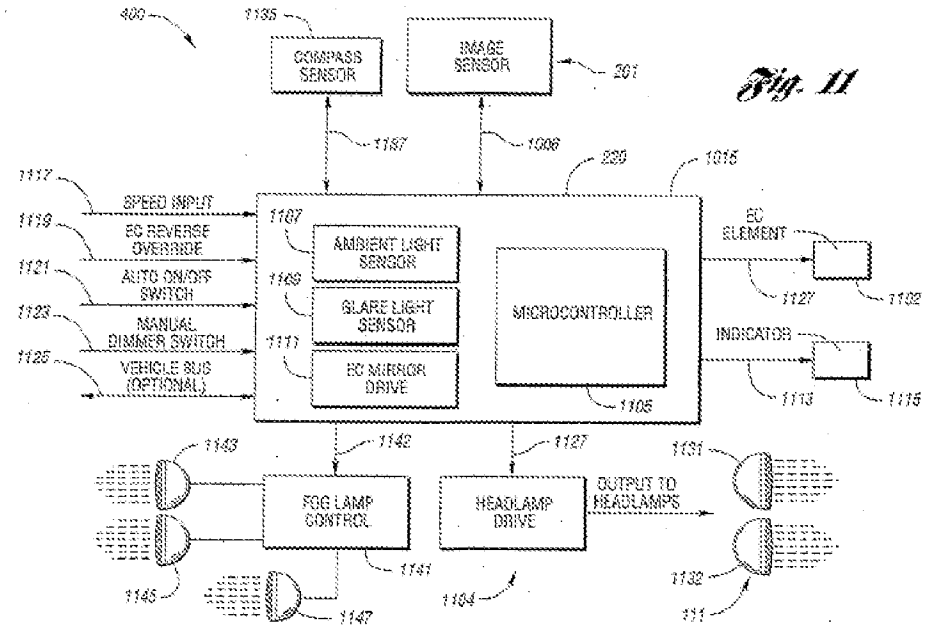

Fig. 11

Fig. 11 is a circuit schematic illustrating a circuit for an optical sensor system and an electrochromic mirror.

● one or more light sources (headlamps) **111**, or **1131**, **1132**, or (LED headlamps) **2600**, incorporated in the structure and in communication with a power source (electrical conductor strips) **2607**, **2613** (Stam PCT teaches LED headlamps 2600 having LEDs (semiconductor optical radiation emitters) 2603, 2605 connected to an electrical conductor strips 2607 and 2613 for operation), *id.* at Figs. 1, 11, or 26a and 26b, and pages 73-74;

● electronic circuitry apparatus (a headlamp controller, or a microcontroller) **1015** for the controlled powering of the light source and other illuminating device elements, *id.* at Figs. 34-36, and pages 70-72;

● one or more cameras (e.g., an image sensor) **201** coupled to a GPS receiver **3450**, and placed on the structure for detecting coordinate-specific information about the illuminated area, said camera in communication with power and control device elements (Stam PCT teaches a controlled vehicle 100 having an automatic headlamp dimmer includes an optical sensor system 102 comprising an image sensor 201 for detecting the headlamps 104 of an oncoming vehicle 105 and the tail lights 108 of a preceding vehicle 110; wherein, the headlamps 111 of the controlled vehicle 100 are controlled automatically to avoid shining the high beams, or bright lights, directly into the eyes of a driver of oncoming vehicle 105 or by reflection into the eyes of the driver of the preceding vehicle 110, *id.* at Figs. 1 and 11, and pages 10-11; and wherein, the microcontroller 1015 utilizes the location and direction of the vehicle (i.e., coordinate-specific information about the vehicle) identified by the GPS receiver 3450 for controlling the exterior lights on the vehicle.) *id.* at Fig. 1, 11 and 34, and page 72;

● a controller (a microcontroller) **1015** integrated with the structure (a vehicle) **100**, in communication with the light source (e.g., headlamps) **111** controlling power circuitry (a headlamp drive) **1104** (including a DC power supply), said controller arranged to processes the information communicated from the camera and automatically control the light provided to the illuminated area), *id.* at Fig. 1, 11, 12 and 34, and pages 27-28 and 72.

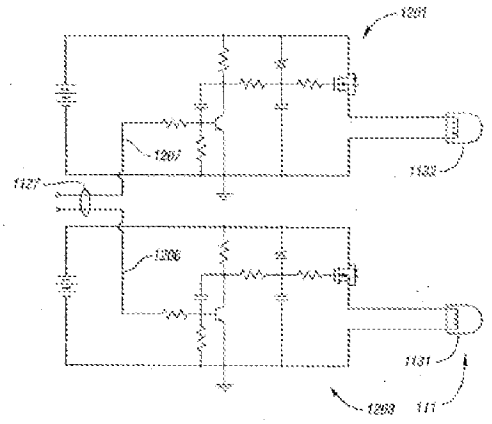

Fig. 12

Fig. 12 is a circuit schematic illustrating a headlamp drive (**1104**) for the circuit of Fig. 11

Claim 6 is therefore rejected.

V. Allowable Subject Matter

1. **Claims 24-87** are allowed.

2. The following is an examiner's statement of reasons for allowance:

The present invention is directed to a detector-controlled illumination system comprising a digital lighting fixture (DLF) 2 having multiple solid-state light sources (SLS) 3 affixed or mounted to a structure or a mechanical device 4, a power conditioning circuitry 5, optical elements 6, a control electronics unit 7, and one or more sensors 8. See Fig. 1, and col. 24:51-55. Particularly,

Regarding independent claims 24, 32, 40, 48, 56, 64, 72, and 80, each recites an illuminating device comprising a DLF (i.e., headlamps) 270 having a plurality of individually controllable LEDs 275, one or more sensors 280, and a controller 279 mounted to the structure of a motor vehicle 271 for automatically control the light provided to an illuminated area of the headlamp 270 of a motor vehicle 271, see Fig. 15. The claims each identifies, *inter alia*, the uniquely distinct features: memory storing instructions that, when executed by one or more processors of the controller, enable the controller to perform the following specific functional operations of:

● Claim 24: "determine first coordinates …", "select a cluster …", and "change emission of …", as recited on lines 21-29 of claim 24.

● Claim 32: "create a beam of …", and "follow, based at least …", as recited on lines 21-29 of claim 32.

● Claim 40: "determine a first cluster of …", "diminish glaring illumination of …", "determine a second, different cluster of the LEDs …", and "diminish glaring illumination of the second …", as recited on lines 21-33 of claim 40.

● Claim 48: "illuminate a portion of …, the first cluster selected based at least in part on known aimings of light associated with the first cluster determined to correspond to the first area, and the first light determined based at least in part on classifying the object …", as recited on lines 20-30 of claim 48.

● Claim 56: "determine, based on data …", "select a first cluster …", and "reduce intensity of …", as recited on lines 21-29 of claim 56.

● Claim 64: "select a first cluster …", "control a first change to …", "select a second, different cluster of the LEDs having…" and "control a second, …", as recited on lines 21-33 of claim 64.

● Claim 72: "determine a target based on …", "determine a fist target location …", "select a cluster of the LEDs having …", "vary illumination …", and "maintain a variance of illumination …", as recited on lines 20-31 of claim 72.

● Claim 80: "identify, based on data received from …", and "change, responsive to the positions associated with the target, first light …", as recited on lines 21-26 of claim 80.

Whereas, the cited prior art references:

▪ **Stam PCT** (Ex. PA-A) teaches a system and method of automatically controlling exterior vehicle lights includes headlamps (111), an image sensor (201) and a controller (1105) to generate control signals provided a control circuit, e.g., a headlamp drive, (1104) for turning certain exterior lights on or off, or change the brightness, aim, focus, etc. to produce various beam patterns that maximize the illuminated area in front of the vehicle without causing excessive glare in the eyes of the other drivers. *Id.* Abstract, and Fig. 11. Particularly, Stam PCT teaches a controlled vehicle 100 having an automatic headlamp dimmer includes an optical sensor system 102 comprising an image sensor 201 for detecting the headlamps 104 of an oncoming vehicle 105 and the tail lights 108 of a preceding vehicle 110; wherein, the headlamps 111 of the controlled vehicle 100 are controlled automatically to avoid shining the high beams, or bright lights, directly into the eyes of a driver of oncoming vehicle 105 or by reflection into the eyes of the driver of the preceding vehicle 110, *id.* at Figs. 1 and 11, and pages 10-11; and wherein, the microcontroller 1015 utilizes the location and direction of the vehicle identified by the GPS receiver 3450 for controlling the exterior lights on the vehicle.) *id.* at Fig. 1, 11 and 34, and page 72.

▪ **Harbers** (Ex. PA-B) teaches a headlamp and dynamic lighting system for a vehicle (1) comprising a headlamp (2, 3) provided with a light source (4, 5) having a plurality of opto-

electronic elements (11, 12, 13, 14), preferably LEDs, which emits light beams 6, 6'…; 7, 7', … in a longitudinal direction 9. Wherein, the spatial distribution of the light beams generated by the opto-electronic elements of the light source can be continuously adjusted or switched on and off, in dependence upon the velocity of the vehicle, the rotational position of the steering wheel, or weather conditions, etc. for providing an improved visibility of the surroundings of the vehicle. See Abstract, Figs.1A, 1B, and 2, col. 5:31-43, col. 6:58-col. 7:22, col. 7:50-51, and col. 8:1-13.

However, the Stam PCT and Harbers, either singularly or in combination, fails to teach or suggest the controller configured to perform the above-identified functional operations of the claimed inventions.

Regarding dependent claims 24-31, 33-39, 41-47, 49-55, 57-63, 65-71, 73-79, and 81-87, each directly or indirectly depends on the base claims 24, 32, 40, 48, 56, 64, 72, and 80, respectively, and is allowed et least due to its dependency.

Any comments considered necessary by applicant must be submitted no later than the payment of the issue fee and, to avoid processing delays, should preferably accompany the issue fee. Such submissions should be clearly labeled "Comments on Statement of Reasons for Allowance."

VI. Information Disclosure Statement

1. The Patent Owner's information disclosure statement (IDS), see form PTO/SB/08a, submitted with the Request filed on July 30, 2021 in accordance with 37 CFR 1.98, has been considered. The information comprising patents and publications cited in form PTO/SB/08a has been considered to the extent suggested in the MPEP. See MPEP § 2014. Note that MPEP §§ 2256 and 2280 indicate that degree of consideration to be given to such information will be normally

limited by the degree to which the party filing the information citation has explained the content and relevance of the information.

VII. CONCLUSION

1. Claim 6 is rejected, and Claims 24-87 are patentable.

VIII. CORRESPONDENCE

1. Notice Re Patent Owner's Correspondence Address

Effective May 16, 2007, 37 CFR 1.33(c) has been revised to provide that: The Patent owner's correspondence address for all communications in an ex parte reexamination is designated as the correspondence address of the patent.

Revisions and Technical Corrections Affecting Requirements for Ex Parte,

72 FR 18892 (April 16, 2007) (Final Rule).

The correspondence address for any pending reexamination proceeding not having the same correspondence address as that of the patent is, by way of his revision to 37 CFR 1.33(c), automatically changed to that of the patent file as of the effective date.

This change is effective for any reexamination proceeding which is pending before the Office as of May 16, 2007, including the present reexamination proceeding, and to any reexamination proceeding which is filed after that date.

Parties are to take this change into account when filing papers, and direct communications accordingly.

In the event the patent owner's correspondence address listed in the papers (record) for the present proceeding is different from the correspondence address of the patent, it is strongly encouraged that the patent owner affirmatively file a Notification of Change of Correspondence

Address in the reexamination proceeding and/or the patent (depending on which address patent owner desires), to conform the address of the proceeding with that of the patent and to clarify the record as to which address should be used for correspondence.

Telephone Numbers for reexamination inquiries:

Reexamination (571) 272-7703

Central Reexam Unit (CRU) (571) 272-7705

Reexamination Facsimile Transmission No. (571) 273-9900

2. In order to ensure full consideration of any amendments, affidavits or declarations, or other documents as evidence of patentability, such documents must be submitted in response to this Office action. Submissions after the next Office action, which is intended to be a final action, will be governed by the requirements of 37 CFR 1.116, after final rejection and 37 CFR 41.33 after appeal, which will be strictly enforced.

3. The patent owner is reminded of the continuing responsibility under 37 CFR 1.565(a) to apprise the Office of any litigation activity, or other prior or concurrent proceeding, involving the '551 patent throughout the course of this reexamination proceeding. See MPEP §§ 2207, 2282 and 2286.

4. Extensions of Time

Extensions of time under 37 CFR 1.136(a) will not be permitted in these proceedings because the provisions of 37 CFR 1.136 apply only to "an applicant" and not to parties in a reexamination proceeding. Additionally, 35 U.S.C. 305 requires that reexamination proceedings "will be conducted with special dispatch" (37 CFR 1.550(a)).

Extension of time in reexamination proceedings are provided for in 37 CFR 1.550(c).

5. All correspondence related to this ex parte reexamination proceeding should be directed as follows:

By EFS-Web: Registered Users may submit correspondence via EFS-Web, at https://efs.uspto.gov/efile/myportal/efs-registered.

By Mail to: Mail Stop *ex parte* Reexam
Central Reexamination Unit
Commissioner for Patents
United States Patent & Trademark Office
P.O. Box 1450
Alexandria, VA 22313-1450

By FAX to: (571) 273-9900
Central Reexamination Unit

For electronic transmissions, 37 CFR 1.8(a)(1)(i) (C) and (ii) states that correspondence (except for a request for reexamination and a corrected or replacement request for reexamination) will be considered timely filed if (a) it is transmitted via the Office's electronic filing system in accordance with 37 CFR 1.6(a)(4), and (b) includes a certificate of transmission for each piece of correspondence stating the date of transmission, which is prior to the expiration of the set period of time in the Office action.

EFS-Web offers the benefit of quick submission to the particular area of the Office that needs to act on the correspondence. Also, EFS-Web submissions are "soft-scanned' (i.e., electronically uploaded) directly into the official file for the reexamination proceeding, which offers parties the opportunity to review the content of their submission after the "soft scanning" process is complete.

Any inquiry concerning this communication should be directed to the Central Reexamination Unit at telephone number (571) 272-7705.

Signed:

/HENRY N TRAN/
Primary Examiner, Art Unit 3992

Conferees:

/ANGELA M LIE/
Primary Examiner, Art Unit 3992

/ANDREW J. FISCHER/
Supervisory Patent Reexamination Specialist, Art Unit 3992

Search Notes	Application/Control No.	Applicant(s)/Patent Under Reexamination
	90/014,815	9955551B2
	Examiner	Art Unit
	Henry Tran	3992

CPC - Searched*		
Symbol	Date	Examiner

CPC Combination Sets - Searched*		
Symbol	Date	Examiner

US Classification - Searched*			
Class	Subclass	Date	Examiner

* See search history printout included with this form or the SEARCH NOTES box below to determine the scope of the search.

Search Notes		
Search Notes	Date	Examiner
Reviewed the 9955551 patent file's Prosecution History	02/17/2022	HT
Searched the Patent 9955551 Reexam Prosecution History in PTAB	03/02/2022	HT
Reviewed/conferenced with PE. A. Lie and SPE. A. Fischer	03/03/2022 & 03/10/2022	HT

Interference Search			
US Class/CPC Symbol	US Subclass/CPC Group	Date	Examiner

/HENRY N TRAN/ Primary Examiner, Art Unit 3992	
Page 1124 of 1219	**SPERO EX. 2023**

Reexamination	Application/Control No.	Applicant(s)/Patent Under Reexamination
	90/014,815	9955551B2
	Certificate Date	Certificate Number

Requester Correspondence Address: ☑ **Patent Owner** ☐ **Third Party**

Brooks Kushman
1000 Town Center
22nd Floor
Southfield, MI 48075

LITIGATION REVIEW ☑	HT (examiner initials)	14 August 2021 (date)
Case Name		Director Initials
None		

COPENDING OFFICE PROCEEDINGS	
TYPE OF PROCEEDING	NUMBER
None	

Doc code: IDS
Doc description: Information Disclosure Statement (IDS) Filed

PTO/SB/08a (02-18)
Approved for use through 11/30/2020. OMB 0651-0031
U.S. Patent and Trademark Office; U.S. DEPARTMENT OF COMMERCE
Under the Paperwork Reduction Act of 1995, no persons are required to respond to a collection of information unless it contains a valid OMB control number.

INFORMATION DISCLOSURE STATEMENT BY APPLICANT (Not for submission under 37 CFR 1.99)		
	Application Number	
	Filing Date	
	First Named Inventor	Yechezkal Evan Spero
	Art Unit	N/A
	Examiner Name	N/A
	Attorney Docket Number	TRCH0102RX

U.S.PATENTS

Examiner Initial*	Cite No	Patent Number	Kind Code[1]	Issue Date	Name of Patentee or Applicant of cited Document	Pages,Columns,Lines where Relevant Passages or Relevant Figures Appear
	1	3,316,442	A	1967-04-25	Konrad	
	2	6,406,172	B1	2002-06-18	Harbers et al.	
	3	6,587,573	B1	2003-07-01	Stam et al.	
	4	6,861,809	B2	2005-03-01	Stam	

If you wish to add additional U.S. Patent citation information please click the Add button.

U.S.PATENT APPLICATION PUBLICATIONS

Examiner Initial*	Cite No	Publication Number	Kind Code[1]	Publication Date	Name of Patentee or Applicant of cited Document	Pages,Columns,Lines where Relevant Passages or Relevant Figures Appear
	1					

If you wish to add additional U.S. Published Application citation information please click the Add button.

FOREIGN PATENT DOCUMENTS

Examiner Initial*	Cite No	Foreign Document Number[3]	Country Code[2] i	Kind Code[4]	Publication Date	Name of Patentee or Applicant of cited Document	Pages,Columns,Lines where Relevant Passages or Relevant Figures Appear	T[5]

ALL REFERENCES CONSIDERED EXCEPT WHERE LINED THROUGH. /H.N.T/

INFORMATION DISCLOSURE STATEMENT BY APPLICANT (Not for submission under 37 CFR 1.99)	Application Number	
	Filing Date	
	First Named Inventor	Yechezkal Evan Spero
	Art Unit	N/A
	Examiner Name	N/A
	Attorney Docket Number	TRCH0102RX

	1	2001070538	WO	A2	2001-09-27	Stam et al.		☐
	2							☐

If you wish to add additional Foreign Patent Document citation information please click the Add button

NON-PATENT LITERATURE DOCUMENTS

Examiner Initials*	Cite No	Include name of the author (in CAPITAL LETTERS), title of the article (when appropriate), title of the item (book, magazine, journal, serial, symposium, catalog, etc), date, pages(s), volume-issue number(s), publisher, city and/or country where published.	T[5]
	1		☐

If you wish to add additional non-patent literature document citation information please click the Add button

EXAMINER SIGNATURE

Examiner Signature	/HENRY N TRAN/	Date Considered	09/08/2021

*EXAMINER: Initial if reference considered, whether or not citation is in conformance with MPEP 609. Draw line through a citation if not in conformance and not considered. Include copy of this form with next communication to applicant.

[1] See Kind Codes of USPTO Patent Documents at www.USPTO.GOV or MPEP 901.04. [2] Enter office that issued the document, by the two-letter code (WIPO Standard ST.3). [3] For Japanese patent documents, the indication of the year of the reign of the Emperor must precede the serial number of the patent document. [4] Kind of document by the appropriate symbols as indicated on the document under WIPO Standard ST.16 if possible. [5] Applicant is to place a check mark here if English language translation is attached.

ALL REFERENCES CONSIDERED EXCEPT WHERE LINED THROUGH. /H.N.T/

INFORMATION DISCLOSURE STATEMENT BY APPLICANT (Not for submission under 37 CFR 1.99)		
	Application Number	
	Filing Date	
	First Named Inventor	Yechezkal Evan Spero
	Art Unit	N/A
	Examiner Name	N/A
	Attorney Docket Number	TRCH0102RX

CERTIFICATION STATEMENT

Please see 37 CFR 1.97 and 1.98 to make the appropriate selection(s):

☐ That each item of information contained in the information disclosure statement was first cited in any communication from a foreign patent office in a counterpart foreign application not more than three months prior to the filing of the information disclosure statement. See 37 CFR 1.97(e)(1).

OR

☐ That no item of information contained in the information disclosure statement was cited in a communication from a foreign patent office in a counterpart foreign application, and, to the knowledge of the person signing the certification after making reasonable inquiry, no item of information contained in the information disclosure statement was known to any individual designated in 37 CFR 1.56(c) more than three months prior to the filing of the information disclosure statement. See 37 CFR 1.97(e)(2).

☐ See attached certification statement.

☐ The fee set forth in 37 CFR 1.17 (p) has been submitted herewith.

☒ A certification statement is not submitted herewith.

SIGNATURE

A signature of the applicant or representative is required in accordance with CFR 1.33, 10.18. Please see CFR 1.4(d) for the form of the signature.

Signature	/Sangeeta G. Shah/	Date (YYYY-MM-DD)	2021-07-30
Name/Print	Sangeeta G. Shah	Registration Number	38,614

This collection of information is required by 37 CFR 1.97 and 1.98. The information is required to obtain or retain a benefit by the public which is to file (and by the USPTO to process) an application. Confidentiality is governed by 35 U.S.C. 122 and 37 CFR 1.14. This collection is estimated to take 1 hour to complete, including gathering, preparing and submitting the completed application form to the USPTO. Time will vary depending upon the individual case. Any comments on the amount of time you require to complete this form and/or suggestions for reducing this burden, should be sent to the Chief Information Officer, U.S. Patent and Trademark Office, U.S. Department of Commerce, P.O. Box 1450, Alexandria, VA 22313-1450. DO NOT SEND FEES OR COMPLETED FORMS TO THIS ADDRESS. **SEND TO: Commissioner for Patents, P.O. Box 1450, Alexandria, VA 22313-1450.**

Privacy Act Statement

The Privacy Act of 1974 (P.L. 93-579) requires that you be given certain information in connection with your submission of the attached form related to a patent application or patent. Accordingly, pursuant to the requirements of the Act, please be advised that: (1) the general authority for the collection of this information is 35 U.S.C. 2(b)(2); (2) furnishing of the information solicited is voluntary; and (3) the principal purpose for which the information is used by the U.S. Patent and Trademark Office is to process and/or examine your submission related to a patent application or patent. If you do not furnish the requested information, the U.S. Patent and Trademark Office may not be able to process and/or examine your submission, which may result in termination of proceedings or abandonment of the application or expiration of the patent.

The information provided by you in this form will be subject to the following routine uses:

1. The information on this form will be treated confidentially to the extent allowed under the Freedom of Information Act (5 U.S.C. 552) and the Privacy Act (5 U.S.C. 552a). Records from this system of records may be disclosed to the Department of Justice to determine whether the Freedom of Information Act requires disclosure of these record s.

2. A record from this system of records may be disclosed, as a routine use, in the course of presenting evidence to a court, magistrate, or administrative tribunal, including disclosures to opposing counsel in the course of settlement negotiations.

3. A record in this system of records may be disclosed, as a routine use, to a Member of Congress submitting a request involving an individual, to whom the record pertains, when the individual has requested assistance from the Member with respect to the subject matter of the record.

4. A record in this system of records may be disclosed, as a routine use, to a contractor of the Agency having need for the information in order to perform a contract. Recipients of information shall be required to comply with the requirements of the Privacy Act of 1974, as amended, pursuant to 5 U.S.C. 552a(m).

5. A record related to an International Application filed under the Patent Cooperation Treaty in this system of records may be disclosed, as a routine use, to the International Bureau of the World Intellectual Property Organization, pursuant to the Patent Cooperation Treaty.

6. A record in this system of records may be disclosed, as a routine use, to another federal agency for purposes of National Security review (35 U.S.C. 181) and for review pursuant to the Atomic Energy Act (42 U.S.C. 218(c)).

7. A record from this system of records may be disclosed, as a routine use, to the Administrator, General Services, or his/her designee, during an inspection of records conducted by GSA as part of that agency's responsibility to recommend improvements in records management practices and programs, under authority of 44 U.S.C. 2904 and 2906. Such disclosure shall be made in accordance with the GSA regulations governing inspection of records for this purpose, and any other relevant (i.e., GSA or Commerce) directive. Such disclosure shall not be used to make determinations about individuals.

8. A record from this system of records may be disclosed, as a routine use, to the public after either publication of the application pursuant to 35 U.S.C. 122(b) or issuance of a patent pursuant to 35 U.S.C. 151. Further, a record may be disclosed, subject to the limitations of 37 CFR 1.14, as a routine use, to the public if the record was filed in an application which became abandoned or in which the proceedings were terminated and which application is referenced by either a published application, an application open to public inspections or an issued patent.

9. A record from this system of records may be disclosed, as a routine use, to a Federal, State, or local law enforcement agency, if the USPTO becomes aware of a violation or potential violation of law or regulation.

PTOL-413A (07-16)
Approved for use through 05/31/2024. OMB 0651-0031
U.S. Patent and Trademark Office; U.S. DEPARTMENT OF COMMERCE
Under the Paperwork Reduction Act of 1995, no persons are required to respond to a collection of information unless it displays a valid OMB control number.

Applicant Initiated Interview Request Form

Application No.: 90014815 First Named Applicant: Yechezkal Evan SPERO
Examiner: Henry N. Tran Art Unit: 3992 Status of Application: Pending Reexam

Tentative Participants:
(1) Sangeeta Shah **(2)** Bernard Tomsa
(3) Examiner Tran **(4)** _____

Proposed Date of Interview: Monday, April 18, 2022 **Proposed Time:** 11:00 **(◉AM◯PM)**

Type of Interview Requested:
(1) ☐ **Telephonic** **(2)** ☐ **Personal** **(3)** ☑ **Video Conference**

Exhibit To Be Shown or Demonstrated: ☐ **YES** ☑ **NO**
If yes, provide brief description: _____

Issues To Be Discussed See Continuation Sheet attached

Issues (Rej., Obj., etc)	Claims/ Fig. #s	Prior Art	Discussed	Agreed	Not Agreed
(1) Rejection 35 USC 112(f)	6, 24, 32, 40, 48, 56, 72	N/A	☐	☐	☐
(2)			☐	☐	☐
(3)			☐	☐	☐
(4)			☐	☐	☐

☐ Continuation Sheet Attached ☐ Proposed Amendment or Arguments Attached
Brief Description of Arguments to be Presented: Interpretation of the claim limitation "electronic circuitry apparatus".

An interview was conducted on the above-identified application on _____

NOTE: This form should be completed and filed by applicant in advance of the interview (see MPEP § 713.01). If this form is signed by a registered practitioner not of record, the Office will accept this as an indication that he or she is authorized to conduct an interview on behalf of the principal (37 CFR 1.32(a)(3)) pursuant to 37 CFR 1.34. This is not a power of attorney to any above named practitioner. See the Instruction Sheet for this form, which is incorporated by reference. By signing this form, applicant or practitioner is certifying that he or she has read the Instruction Sheet. After the interview is conducted, applicant is advised to file a statement of the substance of this interview (37 CFR 1.133(b)) as soon as possible. This application will not be delayed from issue because of applicant's failure to submit a written record of this interview.

/Sangeeta G. Shah/
Applicant/Applicant's Representative Signature

Examiner/SPE Signature

Sangeeta G. shah
Typed/Printed Name of Applicant or Representative

(248) 358-4400
Applicant's/Applicant's Representative's Telephone Number

38,614
Registration Number, if applicable

This collection of information is required by 37 CFR 1.133. The information is required to obtain or retain a benefit by the public which is to file (and by the USPTO to process) an application. Confidentiality is governed by 35 U.S.C. 122 and 37 CFR 1.11 and 1.14. This collection is estimated to take 24 minutes to complete, including gathering, preparing, and submitting the completed application form to the USPTO. Time will vary depending upon the individual case. Any comments on the amount of time you require to complete this form and/or suggestions for reducing this burden, should be sent to the Chief Information Officer, U.S. Patent and Trademark Office, U.S. Department of Commerce, P.O. Box 1450, Alexandria, VA 22313-1450. DO NOT SEND FEES OR COMPLETED FORMS TO THIS ADDRESS.

If you need assistance in completing the form, call 1-800-PTO-9199 and select option 2.

(Continuation Sheet)

Issues to Be Discussed:

	Issues (Rej., Obj., etc)	Claims/Fig. #s	Prior Art	Discussed	Agreed	Not Agreed
1	35 USC 112(f) Claim Interpretation	6,24,32,40,48,56, 64,72 and 80	N/A			

Brief Description of Arguments to be Presented:

Thank you for the courtesy of an interview. Patent Owner would like to discuss the interpretation of the claim limitation "electronic circuitry apparatus" in claims 6, 24, 32, 40, 48, 56, 64, 72 and 80 under 35 USC 112(f) or pre-AIA 35 USC 112(6). As the relevant claims do not include the terms "means" or "step," one or more aspects of the phrase "electronic circuitry apparatus" is being considered to be a generic placeholder under the 3-part test set forth in MPEP 2181(I).

Patent Owner points out that the term "apparatus" is preceded by a structural modifier-- "electronic circuitry." Patent Owner further notes that the Federal Circuit has ruled that "the term 'circuit' coupled with a description in the claims of the circuit's operation typically conveys necessary structure. *See, e.g., Linear Tech Corp. v. Impala Linear Corp.*, 379 F.3d 1311, 1230-21 (Fed. Cir. 2004)*; Apex Inc. v. Raritan Comp., Inc.*, 325 F.3d 1364, 1374 (Fed. Cir. 2003*)*. Here, the claim term "electronic circuitry apparatus" is followed by claim language "for the controlled powering of the light source and other illuminating device elements"—which provides a description of the circuit's operation and conveys necessary structure.

Accordingly, Patent Owner would discuss at least prong (C) of the test set forth in MPEP 2181(I) and takes the position that sufficient structure ("electronic circuitry") is provided in the noted claim limitation for performing the claimed function. In the absence of fulfilment of prong (C), Applicant does not believe that 35 USC 112(f)/pre-AIA 35 USC 112(6) interpretation applies to the phrase "electronic circuitry apparatus."

Electronic Acknowledgement Receipt

EFS ID:	45479864
Application Number:	90014815
International Application Number:	
Confirmation Number:	6654
Title of Invention:	Detector Controlled Illuminating System
First Named Inventor/Applicant Name:	9955551B2
Customer Number:	22045
Filer:	Sangeeta G Shah/Fiona Archer
Filer Authorized By:	Sangeeta G Shah
Attorney Docket Number:	TRCH0102RX
Receipt Date:	14-APR-2022
Filing Date:	30-JUL-2021
Time Stamp:	18:05:05
Application Type:	Reexam (Patent Owner)

Payment information:

Submitted with Payment	no

File Listing:

Document Number	Document Description	File Name	File Size(Bytes)/ Message Digest	Multi Part /.zip	Pages (if appl.)
1	Letter Requesting Interview with Examiner	TRCH0102RX_Interview_Request.PDF	349910 ffddae50cab0fc098058bd13c51f34d6fd6bdc8f	no	2

Warnings:

SPERO EX. 2023

Information:	
Total Files Size (in bytes):	349910

This Acknowledgement Receipt evidences receipt on the noted date by the USPTO of the indicated documents, characterized by the applicant, and including page counts, where applicable. It serves as evidence of receipt similar to a Post Card, as described in MPEP 503.

New Applications Under 35 U.S.C. 111
If a new application is being filed and the application includes the necessary components for a filing date (see 37 CFR 1.53(b)-(d) and MPEP 506), a Filing Receipt (37 CFR 1.54) will be issued in due course and the date shown on this Acknowledgement Receipt will establish the filing date of the application.
National Stage of an International Application under 35 U.S.C. 371
If a timely submission to enter the national stage of an international application is compliant with the conditions of 35 U.S.C. 371 and other applicable requirements a Form PCT/DO/EO/903 indicating acceptance of the application as a national stage submission under 35 U.S.C. 371 will be issued in addition to the Filing Receipt, in due course.
New International Application Filed with the USPTO as a Receiving Office
If a new international application is being filed and the international application includes the necessary components for an international filing date (see PCT Article 11 and MPEP 1810), a Notification of the International Application Number and of the International Filing Date (Form PCT/RO/105) will be issued in due course, subject to prescriptions concerning national security, and the date shown on this Acknowledgement Receipt will establish the international filing date of the application.

Doc Code: ECOMM.AUTH/ECOMM.WTDW
Doc Description: Internet Communications Authorization/Internet Communications Authorization Withdrawal

PTO/SB/439 (11-15)

AUTHORIZATION FOR INTERNET COMMUNICATIONS IN A PATENT APPLICATION OR REQUEST TO WITHDRAW AUTHORIZATION FOR INTERNET COMMUNICATIONS		
	Application No.	90/014,815
	Filing Date	July 30, 2021
	First Named Inventor	Yechezkal Evan Spero
	Art Unit	3992
	Examiner Name	Tran, Henry N.
	Practitioner Docket No.	TRCH0102RX

To: Commissioner for Patents
P.O. Box 1450
Alexandria, VA 22313-1450

I. To authorize permission for Internet Communications.

[x] Recognizing that Internet communications are not secure, I hereby authorize the USPTO to communicate with the undersigned and practitioners in accordance with 37 CFR 1.33 and 37 CFR 1.34 concerning any subject matter of this application via video conferencing, instant messaging, or electronic mail. I understand that a copy of these communications will be made of record in the application file. (MPEP 502.03)

II. To withdraw authorization for Internet Communications.

[ ] The authorization given on _____, to the USPTO to communicate with the undersigned and any practitioner in accordance with 37 CFR 1.33 and 37 CFR 1.34 concerning any subject matter of this application via Internet communications such as video conferencing, instant messaging, or electronic mail is hereby withdrawn. I understand that the withdrawal is effective when approved rather than when received.

I am the

[ ] applicant.

[x] attorney or agent of record. Registration number 38,614.

[ ] attorney or agent acting under 37 CFR 1.34. Registration number _____.

/Sangeeta G. Shah/	April 22, 2022
Signature	Date
Sangeeta G. Shah	248-358-4400
Typed or printed name	Telephone Number

NOTE: This form must be signed in accordance with 37 CFR 1.33. See 37 CFR 1.4 for signature requirements and certifications. Juristic entities must be represented by a patent practitioner (see 37 CFR 1.31, which is applicable to any paper filed on or after September 16, 2012, that is presented on behalf of a juristic entity, regardless of application filing date). Submit multiple forms if more than one signature is required, see below*.

[x] * Total of 1 forms are submitted.

Privacy Act Statement

The **Privacy Act of 1974 (P.L. 93-579)** requires that you be given certain information in connection with your submission of the attached form related to a patent application or patent. Accordingly, pursuant to the requirements of the Act, please be advised that: (1) the general authority for the collection of this information is 35 U.S.C. 2(b)(2); (2) furnishing of the information solicited is voluntary; and (3) the principal purpose for which the information is used by the U.S. Patent and Trademark Office is to process and/or examine your submission related to a patent application or patent. If you do not furnish the requested information, the U.S. Patent and Trademark Office may not be able to process and/or examine your submission, which may result in termination of proceedings or abandonment of the application or expiration of the patent.

The information provided by you in this form will be subject to the following routine uses:

1. The information on this form will be treated confidentially to the extent allowed under the Freedom of Information Act (5 U.S.C. 552) and the Privacy Act (5 U.S.C 552a). Records from this system of records may be disclosed to the Department of Justice to determine whether disclosure of these records is required by the Freedom of Information Act.
2. A record from this system of records may be disclosed, as a routine use, in the course of presenting evidence to a court, magistrate, or administrative tribunal, including disclosures to opposing counsel in the course of settlement negotiations.
3. A record in this system of records may be disclosed, as a routine use, to a Member of Congress submitting a request involving an individual, to whom the record pertains, when the individual has requested assistance from the Member with respect to the subject matter of the record.
4. A record in this system of records may be disclosed, as a routine use, to a contractor of the Agency having need for the information in order to perform a contract. Recipients of information shall be required to comply with the requirements of the Privacy Act of 1974, as amended, pursuant to 5 U.S.C. 552a(m).
5. A record related to an International Application filed under the Patent Cooperation Treaty in this system of records may be disclosed, as a routine use, to the International Bureau of the World Intellectual Property Organization, pursuant to the Patent Cooperation Treaty.
6. A record in this system of records may be disclosed, as a routine use, to another federal agency for purposes of National Security review (35 U.S.C. 181) and for review pursuant to the Atomic Energy Act (42 U.S.C. 218(c)).
7. A record from this system of records may be disclosed, as a routine use, to the Administrator, General Services, or his/her designee, during an inspection of records conducted by GSA as part of that agency's responsibility to recommend improvements in records management practices and programs, under authority of 44 U.S.C. 2904 and 2906. Such disclosure shall be made in accordance with the GSA regulations governing inspection of records for this purpose, and any other relevant (*i.e.*, GSA or Commerce) directive. Such disclosure shall not be used to make determinations about individuals.
8. A record from this system of records may be disclosed, as a routine use, to the public after either publication of the application pursuant to 35 U.S.C. 122(b) or issuance of a patent pursuant to 35 U.S.C. 151. Further, a record may be disclosed, subject to the limitations of 37 CFR 1.14, as a routine use, to the public if the record was filed in an application which became abandoned or in which the proceedings were terminated and which application is referenced by either a published application, an application open to public inspection or an issued patent.
9. A record from this system of records may be disclosed, as a routine use, to a Federal, State, or local law enforcement agency, if the USPTO becomes aware of a violation or potential violation of law or regulation.

Electronic Acknowledgement Receipt

EFS ID:	45536041
Application Number:	90014815
International Application Number:	
Confirmation Number:	6654
Title of Invention:	Detector Controlled Illuminating System
First Named Inventor/Applicant Name:	9955551B2
Customer Number:	22045
Filer:	Sangeeta G Shah/Fiona Archer
Filer Authorized By:	Sangeeta G Shah
Attorney Docket Number:	TRCH0102RX
Receipt Date:	22-APR-2022
Filing Date:	30-JUL-2021
Time Stamp:	11:36:20
Application Type:	Reexam (Patent Owner)

Payment information:

Submitted with Payment	no

File Listing:

Document Number	Document Description	File Name	File Size(Bytes)/ Message Digest	Multi Part /.zip	Pages (if appl.)
1	Miscellaneous Incoming Letter	TRCH0102RX_Authorization_Internet_Communications.PDF	171234 c792f98ded889593a31ece806d054577c0ffe2a6	no	2

Warnings:

SPERO EX. 2023

Information:	
Total Files Size (in bytes):	171234

This Acknowledgement Receipt evidences receipt on the noted date by the USPTO of the indicated documents, characterized by the applicant, and including page counts, where applicable. It serves as evidence of receipt similar to a Post Card, as described in MPEP 503.

New Applications Under 35 U.S.C. 111
If a new application is being filed and the application includes the necessary components for a filing date (see 37 CFR 1.53(b)-(d) and MPEP 506), a Filing Receipt (37 CFR 1.54) will be issued in due course and the date shown on this Acknowledgement Receipt will establish the filing date of the application.
National Stage of an International Application under 35 U.S.C. 371
If a timely submission to enter the national stage of an international application is compliant with the conditions of 35 U.S.C. 371 and other applicable requirements a Form PCT/DO/EO/903 indicating acceptance of the application as a national stage submission under 35 U.S.C. 371 will be issued in addition to the Filing Receipt, in due course.
New International Application Filed with the USPTO as a Receiving Office
If a new international application is being filed and the international application includes the necessary components for an international filing date (see PCT Article 11 and MPEP 1810), a Notification of the International Application Number and of the International Filing Date (Form PCT/RO/105) will be issued in due course, subject to prescriptions concerning national security, and the date shown on this Acknowledgement Receipt will establish the international filing date of the application.

IN THE UNITED STATES PATENT AND TRADEMARK OFFICE

In re Reexam application of:

Yechezkal Evan SPERO

Serial No.: 90/014,815

Filed: July 30, 2021

For: Detector Controlled Illuminating System

Attorney Docket No.: TRCH0102RX

Group Art Unit: 3992

Examiner: Tran, Henry N.

STATEMENT UNDER 37 C.F.R. §1.565(d)

Mail Stop Reexam
Commissioner for Patents
U.S. Patent and Trademark Office
P.O. Box 1450
Alexandria, VA 22313-1450

Commissioner:

In accordance with 37 C.F.R. §1.565(d), the patent owner hereby informs the Office of a concurrent proceeding in which U.S. Patent No 9,955,551 is involved, namely an *ex parte* reexamination filed on July 30, 2021 and a broadening Reissue application, Serial No. 16/858,342 filed on April 24, 2020.

Patent Owner hereby confirms that it does not intend and will not broaden claim 6 of the 9,955,551 patent as part of the broadening reissue application—eliminating any potential overlap between the reexamination proceeding and the reissue application. To ensure the reexamination proceeding can continue with special dispatch, Patentee hereby requests a stay of the reissue application pending conclusion of the reexamination proceeding.

Should the Central Reexamination Unit have any questions or desire further clarification, please contact the undersigned.

Respectfully submitted,

Yechezkal Evan Spero

By: /Sangeeta G. Shah/
Sangeeta G. Shah
Reg. No. 38,614
Attorney/Agent for Applicant

Date: May 6, 2022

BROOKS KUSHMAN P.C.
1000 Town Center, 22nd Floor
Southfield, MI 48075-1238
Phone: 248-358-4400
Fax: 248-358-3351

Electronic Acknowledgement Receipt

EFS ID:	45656051
Application Number:	90014815
International Application Number:	
Confirmation Number:	6654
Title of Invention:	Detector Controlled Illuminating System
First Named Inventor/Applicant Name:	9955551B2
Customer Number:	22045
Filer:	Sangeeta G Shah/Fiona Archer
Filer Authorized By:	Sangeeta G Shah
Attorney Docket Number:	TRCH0102RX
Receipt Date:	06-MAY-2022
Filing Date:	30-JUL-2021
Time Stamp:	18:38:57
Application Type:	Reexam (Patent Owner)

Payment information:

Submitted with Payment	no

File Listing:

Document Number	Document Description	File Name	File Size(Bytes)/ Message Digest	Multi Part /.zip	Pages (if appl.)
1	Notice of concurrent proceeding(s)	TRCH0102RX_Statement_Concurrent_Proceedings.pdf	97353 6d4ceaf88cc78a52650fe6681de12bdef2060e2a	no	2

Warnings:

Information:	
Total Files Size (in bytes):	97353

This Acknowledgement Receipt evidences receipt on the noted date by the USPTO of the indicated documents, characterized by the applicant, and including page counts, where applicable. It serves as evidence of receipt similar to a Post Card, as described in MPEP 503.

New Applications Under 35 U.S.C. 111
If a new application is being filed and the application includes the necessary components for a filing date (see 37 CFR 1.53(b)-(d) and MPEP 506), a Filing Receipt (37 CFR 1.54) will be issued in due course and the date shown on this Acknowledgement Receipt will establish the filing date of the application.
National Stage of an International Application under 35 U.S.C. 371
If a timely submission to enter the national stage of an international application is compliant with the conditions of 35 U.S.C. 371 and other applicable requirements a Form PCT/DO/EO/903 indicating acceptance of the application as a national stage submission under 35 U.S.C. 371 will be issued in addition to the Filing Receipt, in due course.
New International Application Filed with the USPTO as a Receiving Office
If a new international application is being filed and the international application includes the necessary components for an international filing date (see PCT Article 11 and MPEP 1810), a Notification of the International Application Number and of the International Filing Date (Form PCT/RO/105) will be issued in due course, subject to prescriptions concerning national security, and the date shown on this Acknowledgement Receipt will establish the international filing date of the application.

CLAIMS:

6. (Canceled)

Electronic Acknowledgement Receipt

EFS ID:	45723844
Application Number:	90014815
International Application Number:	
Confirmation Number:	6654
Title of Invention:	Detector Controlled Illuminating System
First Named Inventor/Applicant Name:	9955551B2
Customer Number:	22045
Filer:	Sangeeta G Shah/Fiona Archer
Filer Authorized By:	Sangeeta G Shah
Attorney Docket Number:	TRCH0102RX
Receipt Date:	16-MAY-2022
Filing Date:	30-JUL-2021
Time Stamp:	16:13:14
Application Type:	Reexam (Patent Owner)

Payment information:

Submitted with Payment	no

File Listing:

Document Number	Document Description	File Name	File Size(Bytes)/ Message Digest	Multi Part /.zip	Pages (if appl.)
1	Response after non-final action-owner timely	Spero_Response_to_Office_Action_dated_3-16-22.PDF	178542 b8964704f6c16869bd7fcef5e3ef08c3ab131539	no	4

Warnings:

SPERO EX. 2023

Information:					
2	Amendment Copy Claims/Response to Suggested Claims	OTH_A_Amended_Claims.PDF	27603 1f6e70a5de45ee33f3c9ee5d39d73123ac9c222b	no	1
Warnings:					
Information:					
			Total Files Size (in bytes):	206145	

This Acknowledgement Receipt evidences receipt on the noted date by the USPTO of the indicated documents, characterized by the applicant, and including page counts, where applicable. It serves as evidence of receipt similar to a Post Card, as described in MPEP 503.

New Applications Under 35 U.S.C. 111
If a new application is being filed and the application includes the necessary components for a filing date (see 37 CFR 1.53(b)-(d) and MPEP 506), a Filing Receipt (37 CFR 1.54) will be issued in due course and the date shown on this Acknowledgement Receipt will establish the filing date of the application.
National Stage of an International Application under 35 U.S.C. 371
If a timely submission to enter the national stage of an international application is compliant with the conditions of 35 U.S.C. 371 and other applicable requirements a Form PCT/DO/EO/903 indicating acceptance of the application as a national stage submission under 35 U.S.C. 371 will be issued in addition to the Filing Receipt, in due course.
New International Application Filed with the USPTO as a Receiving Office
If a new international application is being filed and the international application includes the necessary components for an international filing date (see PCT Article 11 and MPEP 1810), a Notification of the International Application Number and of the International Filing Date (Form PCT/RO/105) will be issued in due course, subject to prescriptions concerning national security, and the date shown on this Acknowledgement Receipt will establish the international filing date of the application.

IN THE UNITED STATES PATENT AND TRADEMARK OFFICE

In re application of:

Yechezkal Evan SPERO — Group Art Unit: 3992

Application/Control No.: 90/014,815 — Examiner: Tran, Henry N.

Patent No.: 9,955,551

Filed: July 30, 2021

For: DETECTOR CONTROLLED ILLUMINATING SYSTEM

Attorney Docket No.: TRCH0102RX

PATENT OWNER RESPONSE TO REEXAMINATION UNDER 37 C.F.R. 1.550 WITH AMENDMENT

Mail Stop *Ex Parte* Reexamination
Attn: Central Reexamination Unit
Commissioner for Patents
P.O. Box 1450
Alexandria, VA 22313-1450

Commissioner:

Patentee submits the following response to the March 16, 2022 Office Action. In addition, Patentee submits Exhibit OTH-A, claim amendments under 37 CFR 1.550(d), which cancels claim 6.

REMARKS

In response to the Examiner's March 16, 2022 Office Action, Patentee asserts that the claim limitation "electronic circuitry apparatus" in claims 6, 24, 32, 40, 48, 56, 64, 72 and 80 does not invoke 35 U.S.C. § 112(f) or pre-AIA 35 U.S.C. § 112(6) as the claim limitation term includes a structural modifier – "electronic circuitry." Patent Owners notes that the Federal Circuit has ruled that "the term 'circuit' coupled with a description in the claims of the circuit's operation typically conveys necessary structure." *See, e.g., Linear Tech Corp. v. Impala Linear Corp.*, 379 F.3d 1311, 1230-21 (Fed. Cir. 2004)*; Apex Inc. v. Raritan Comp., Inc.*, 325 F.3d 1364, 1374 (Fed. Cir. 2003*)*.

More specifically, as stated in MPEP 2181(I)(A), "apparatus for" is a non-structural generic placeholder that may invoke 112(6), such that prong (A) of the test is satisfied. Similarly, the claims include "for . . ." that links the functional language "controlled powering of the light source . . .", such that prong (B) of the test is satisfied. However, the generic placeholder "apparatus" is modified by "sufficient structure . . . for performing the claimed function", i.e. "electronic circuitry", such that prong (C) is not satisfied and thus 112(6) does not apply. MPEP 2181(I)(A) acknowledges that a "circuit" or "circuitry" are structural terms that have been found not to invoke 112(6):

> The following are examples of structural terms that have been found not to invoke 35 U.S.C. 112(f) or pre-AIA 35 U.S.C. 112, paragraph 6: "circuit," "detent mechanism," "digital detector," "reciprocating member," "connector assembly," "perforation," "sealingly connected joints," and "eyeglass hanger member." *See Mass. Inst. of Tech.*, 462 F.3d at 1355-1356, 80 USPQ2d at 1332 (the court found the recitation of "aesthetic correction circuitry" sufficient to avoid pre-AIA 35 U.S.C. 112, paragraph 6, treatment because the term circuit, combined with a description of the function of the circuit, connoted sufficient structure to one of ordinary skill in the art.); *Linear Tech. Corp. v. Impala Linear Corp.*, 379 F.3d 1311, 1321, 72 USPQ2d 1065, 1071 (Fed. Cir. 2004); Apex, 325 F.3d at 1373, 66 USPQ2d at 1452; *Greenberg*, 91 F.3d at 1583-84, 39 USPQ2d at 1786; *Personalized Media*, 161 F.3d at 704-05, 39 USPQ2d at 1786; *CCS Fitness*, 288 F.3d at 1369-70, 62 USPQ2d at 1664-65; *Cole v. Kimberly-Clark Corp.*, 102 F.3d 524, 531 (Fed. Cir. 1996); *Watts*, 232 F.3d at 881, 56 USPQ2d at 1839; *Al-Site*

Corp. v. VSI Int'l, Inc., 174 F.3d 1308, 1318-19, 50 USPQ2d 1161, 1166-67 (Fed. Cir. 1999).

MPEP 2181(I)(A)

The specification is replete with examples of circuits and electronic circuitry (e.g., "The electric power is received in the correct waveform, voltage and current from the power source 1, or is conditioned within the DLF 2, by power conditioning elements and circuitry 5" [col. 19, ll. 66-67]) such that "persons of ordinary skill in the art reading the specification understand the term to have a sufficiently definite meaning as the name for the structure that performs the function, even when the term covers a broad class of structures or identifies the structures by their function" as required by MPEP 2181 such that application of 112(6) is improper.

Finally, while Patentee is cancelling claim 6, as a point of clarification, Patentee notes that in the non-final rejection of claim 6, the Examiner on page 7 equated both "electronic circuitry apparatus" and "controller" of claim 6 to the same element of Stam, namely, the microcontroller 1015. The "electronic circuitry apparatus" is recited in claim 6 as "electronic circuitry apparatus for the controlled powering of the light source and other illuminating device elements." The "controller" is recited in claim 6 as "a controller integrated within the structure in communication with the light source controlling power circuitry…" Thus, based on the claim language, the "electronic circuitry apparatus for the controlled powering of the light source" is the "light source controlling power circuitry" with which the "controller" communicates. Applicant notes that while the electronic circuitry apparatus being part of the controller is a possible construction under 112(6) of "electronic circuitry apparatus," there are also numerous examples in the specification where structure that would correspond to the claimed function – circuitry or the like "for the controlled powering of the light source and other illuminating device elements" – is not actually part of the controller and would constitute something external to the controller with which the controller communicates (e.g. "power circuits available in the literature for driving the LEDs are used as published in technical notes by manufactures such as Agilent®" [Col. 15, ll. 34-36]).

CONCLUSION

For at least the foregoing reasons, Patentee believes that 112(6) construction is improper. Applicant agrees to cancel claim 6 and proceed with allowance of claims 24-87 and such action

by the Examiner is respectfully requested. If a telephone conference would resolve any additional questions, such a call is invited at the Examiner's convenience.

Please charge any fees or credit any overpayments as a result of the filing of this paper to our Deposit Account No. 02-3978.

Respectfully submitted,

Yechezkal Evan SPERO

By: /Sangeeta G. Shah/
Brooks Kushman P.C.
Reg. No. 38,614
Attorneys for Patentee

Date: May 16, 2022

BROOKS KUSHMAN P.C.
1000 Town Center, 22nd Floor
Southfield, MI 48075-1238
Phone: 248-358-4400
Fax: 248-358-3351

Electronic Acknowledgement Receipt

EFS ID:	46071641
Application Number:	90014815
International Application Number:	
Confirmation Number:	6654
Title of Invention:	Detector Controlled Illuminating System
First Named Inventor/Applicant Name:	9955551B2
Customer Number:	22045
Filer:	Sangeeta G Shah/Fiona Archer
Filer Authorized By:	Sangeeta G Shah
Attorney Docket Number:	TRCH0102RX
Receipt Date:	29-JUN-2022
Filing Date:	30-JUL-2021
Time Stamp:	09:11:57
Application Type:	Reexam (Patent Owner)

Payment information:

Submitted with Payment	no

File Listing:

Document Number	Document Description	File Name	File Size(Bytes)/ Message Digest	Multi Part /.zip	Pages (if appl.)
1	Notice of concurrent proceeding(s)	TRCH0102RX_Report_on_filing_action_patent_1.pdf	164737 7189c02f157ad4c364a812bcdb22683485dbde99	no	1

Warnings:

SPERO EX. 2023

Information:					
2	Notice of concurrent proceeding(s)	TRCH0102RX_Report_on_filing_action_patent_2.pdf	160595 b961ef68016c9da08e7a9c4f0962ba914e060d5a	no	1
Warnings:					
Information:					
			Total Files Size (in bytes):	325332	

This Acknowledgement Receipt evidences receipt on the noted date by the USPTO of the indicated documents, characterized by the applicant, and including page counts, where applicable. It serves as evidence of receipt similar to a Post Card, as described in MPEP 503.

New Applications Under 35 U.S.C. 111
If a new application is being filed and the application includes the necessary components for a filing date (see 37 CFR 1.53(b)-(d) and MPEP 506), a Filing Receipt (37 CFR 1.54) will be issued in due course and the date shown on this Acknowledgement Receipt will establish the filing date of the application.
National Stage of an International Application under 35 U.S.C. 371
If a timely submission to enter the national stage of an international application is compliant with the conditions of 35 U.S.C. 371 and other applicable requirements a Form PCT/DO/EO/903 indicating acceptance of the application as a national stage submission under 35 U.S.C. 371 will be issued in addition to the Filing Receipt, in due course.
New International Application Filed with the USPTO as a Receiving Office
If a new international application is being filed and the international application includes the necessary components for an international filing date (see PCT Article 11 and MPEP 1810), a Notification of the International Application Number and of the International Filing Date (Form PCT/RO/105) will be issued in due course, subject to prescriptions concerning national security, and the date shown on this Acknowledgement Receipt will establish the international filing date of the application.

AO 120 (Rev. 08/10)

TO: Mail Stop 8 Director of the U.S. Patent and Trademark Office P.O. Box 1450 Alexandria, VA 22313-1450	REPORT ON THE FILING OR DETERMINATION OF AN ACTION REGARDING A PATENT OR TRADEMARK

In Compliance with 35 U.S.C. § 290 and/or 15 U.S.C. § 1116 you are hereby advised that a court action has been filed in the U.S. District Court for the District of Delaware on the following

☐ Trademarks or ☑ Patents. (☐ the patent action involves 35 U.S.C. § 292.):

DOCKET NO.	DATE FILED	U.S. DISTRICT COURT
1:22-cv-00752	06/07/2022	for the District of Delaware

PLAINTIFF	DEFENDANT
Torchlight Technologies LLC	General Motors LLC, General Motors Holdings LLC, and General Motors Company

	PATENT OR TRADEMARK NO.	DATE OF PATENT OR TRADEMARK	HOLDER OF PATENT OR TRADEMARK
1	9,955,551	4/24/2018	Yechezkal Evan Spero
2	10,894,503	1/19/2021	Yechezkal Evan Spero
3	11,208,029	12/28/2021	Yechezkal Evan Spero
4			
5			

In the above—entitled case, the following patent(s)/ trademark(s) have been included:

DATE INCLUDED	INCLUDED BY ☐ Amendment ☐ Answer ☐ Cross Bill ☐ Other Pleading	
PATENT OR TRADEMARK NO.	DATE OF PATENT OR TRADEMARK	HOLDER OF PATENT OR TRADEMARK
1		
2		
3		
4		
5		

In the above—entitled case, the following decision has been rendered or judgement issued:

DECISION/JUDGEMENT

CLERK	(BY) DEPUTY CLERK	DATE

Copy 1—Upon initiation of action, mail this copy to Director Copy 3—Upon termination of action, mail this copy to Director
Copy 2—Upon filing document adding patent(s), mail this copy to Director Copy 4—Case file copy

AO 120 (Rev. 08/10)

TO: Mail Stop 8 Director of the U.S. Patent and Trademark Office P.O. Box 1450 Alexandria, VA 22313-1450	REPORT ON THE FILING OR DETERMINATION OF AN ACTION REGARDING A PATENT OR TRADEMARK

In Compliance with 35 U.S.C. § 290 and/or 15 U.S.C. § 1116 you are hereby advised that a court action has been filed in the U.S. District Court for the District of Delaware on the following

☐ Trademarks or ☑ Patents. (☐ the patent action involves 35 U.S.C. § 292.):

DOCKET NO.	DATE FILED	U.S. DISTRICT COURT
1:22-cv-00751	6/7/2022	for the District of Delaware

PLAINTIFF	DEFENDANT
Torchlight Technologies LLC	Daimler AG, Mercedes-Benz USA, LLC, Volkswagen Group of America, Inc., Audi AG, Audi of America, LLC, Porsche AG, and Porsche Cars North America, Inc.

	PATENT OR TRADEMARK NO.	DATE OF PATENT OR TRADEMARK	HOLDER OF PATENT OR TRADEMARK
1	9,955,551	4/24/2018	Yechezkal Evan Spero
2	10,894,503	1/19/2021	Yechezkal Evan Spero
3	11,208,029	12/28/2021	Yechezkal Evan Spero
4			
5			

In the above—entitled case, the following patent(s)/ trademark(s) have been included:

DATE INCLUDED	INCLUDED BY ☐ Amendment ☐ Answer ☐ Cross Bill ☐ Other Pleading	
PATENT OR TRADEMARK NO.	DATE OF PATENT OR TRADEMARK	HOLDER OF PATENT OR TRADEMARK
1		
2		
3		
4		
5		

In the above—entitled case, the following decision has been rendered or judgement issued:

DECISION/JUDGEMENT

CLERK	(BY) DEPUTY CLERK	DATE

Copy 1—Upon initiation of action, mail this copy to Director Copy 3—Upon termination of action, mail this copy to Director
Copy 2—Upon filing document adding patent(s), mail this copy to Director Copy 4—Case file copy

UNITED STATES PATENT AND TRADEMARK OFFICE

UNITED STATES DEPARTMENT OF COMMERCE
United States Patent and Trademark Office
Address: COMMISSIONER FOR PATENTS
P.O. Box 1450
Alexandria, Virginia 22313-1450
www.uspto.gov

APPLICATION NO.	FILING DATE	FIRST NAMED INVENTOR	ATTORNEY DOCKET NO.	CONFIRMATION NO.
90/014,815	07/30/2021	9955551B2	TRCH0102RX	6654

22045 7590 07/29/2022
Brooks Kushman
1000 Town Center
22nd Floor
Southfield, MI 48075

EXAMINER
TRAN, HENRY N

ART UNIT	PAPER NUMBER
3992	

MAIL DATE	DELIVERY MODE
07/29/2022	PAPER

Please find below and/or attached an Office communication concerning this application or proceeding.

The time period for reply, if any, is set in the attached communication.

Notice of Intent to Issue Ex Parte Reexamination Certificate	**Control No.** 90/014,815	**Patent Under Reexamination** 9955551	
	Examiner Henry Tran	**Art Unit** 3992	**AIA Status** No

-- The MAILING DATE of this communication appears on the cover sheet with the correspondence address --

1. ☑ Prosecution on the merits is (or remains) closed in this *ex parte* reexamination proceeding. This proceeding is subject to reopening at the initiative of the Office or upon petition. *Cf.* 37 CFR 1.313(a). A Certificate will be issued in view of
   (a) ☑ Patent owner's communication(s) filed: 16 May 2022.
   (b) ☐ Patent owner's failure to file an appropriate timely response to the Office action mailed: _____.
   (c) ☐ Patent owner's failure to timely file an Appeal Brief (37 CFR 41.31).
   (d) ☐ The decision on appeal by the ☐ Board of Patent Appeals and Interferences ☐ Court dated _____
   (e) ☐ Other: _____.
2. The Reexamination Certificate will indicate the following:
   (a) Change in the Specification: ☐ Yes ☑ No
   (b) Change in the Drawing(s): ☐ Yes ☑ No
   (c) Status of the Claim(s):
      (1) Patent claim(s) confirmed: None.
      (2) Patent claim(s) amended (including dependent on amended claim(s)): None
      (3) Patent claim(s) canceled: 6.
      (4) Newly presented claim(s) patentable: 24-87.
      (5) Newly presented canceled claims: _____.
      (6) Patent claim(s) ☐ previously ☐ currently disclaimed: _____
      (7) Patent claim(s) not subject to reexamination: 1-5 and 7-23.
3. ☐ A declaration(s)/affidavit(s) under **37 CFR 1.130(b)** was/were filed on _____.
4. ☑ Note the attached statement of reasons for patentability and/or confirmation. Any comments considered necessary by patent owner regarding reasons for patentability and/or confirmation must be submitted promptly to avoid processing delays. Such submission(s) should be labeled: "Comments On Statement of Reasons for Patentability and/or Confirmation."
5. ☐ Note attached NOTICE OF REFERENCES CITED (PTO-892).
6. ☐ Note attached LIST OF REFERENCES CITED (PTO/SB/08 or PTO/SB/08 substitute).
7. ☐ The drawing correction request filed on _____ is: ☐approved ☐disapproved.
8. ☐ Acknowledgment is made of the priority claim under 35 U.S.C. § 119(a)-(d) or (f).
   a) ☐ All b) ☐ Some* c) ☐None of the certified copies have
   ☐been received.
   ☐not been received.
   ☐been filed in Application No. _____.
   ☐been filed in reexamination Control No. _____.
   ☐been received by the International Bureau in PCT Application No. _____.

   * Certified copies not received: _____.
9. ☐ Note attached Examiner's Amendment.
10. ☐ Note attached Interview Summary (PTO-474).
11. ☐ Other: _____.

All correspondence relating to this reexamination proceeding should be directed to the **Central Reexamination Unit** at the mail, FAX, or hand-carry addresses given at the end of this Office action.

/HENRY N TRAN/ Primary Examiner, Art Unit 3992	/ANGELA M LIE/ Primary Examiner, Art Unit 3992

cc: Requester (if third party requester)

EX PARTE REEXAMINATION

NOTICE OF INTENT TO ISSUE EX PARTE REEXAMINATION CERTIFICATE

(NIRC)

Summary

1. U.S. Patent No. 9,955,551 B2 (the '551 patent) includes patent claims 1-23. The '551 patent claim 6 and new claims 24-87 are subject to reexamination. Claims 1-5 and 7-23 are not subject to reexamination.

2. Claim 6 has been canceled by the Amendment filed on May 16, 2022

3. Claims 24-87 are allowed and/or confirmed.

Allowable Subject Matter

4. Claims 24-87 are allowed and/or confirmed.

STATEMENT OF REASONS FOR PATENTABILITY AND/OR CONFIRMATION

5. The following is an examiner's statement of reasons for patentability and/or confirmation of the claims found patentable in this reexamination proceeding:

The present invention is directed to a detector-controlled illumination system comprising a digital lighting fixture (DLF) **2** having multiple solid-state light sources (SLS) **3** affixed or mounted to a structure or a mechanical device **4**, a power conditioning circuitry **5**, optical elements **6**, a control electronics unit **7**, and one or more sensors **8**. See Fig. 1, and col. 24:51-55.

Regarding independent claims 24, 32, 40, 48, 56, 64, 72, and 80, each recites an illuminating device having automatic control of light provided to an illuminated area of a motor vehicle **271** comprising at least one headlamp **270** having a plurality of individually controllable

LEDs **275**, one or more sensors **280**, and a controller **279**, see Fig. 15. Particularly, the claims each identifies, *inter alia*, the uniquely distinct features: memory storing instructions that, when executed by one or more processors of the controller, enable the controller to perform the following specific functional operations of:

● Claim 24: "determine first coordinates …", "select a cluster …", and "change emission of …", as recited on lines 21-29 of claim 24.

● Claim 32: "create a beam of …", and "follow, based at least …", as recited on lines 21-29 of claim 32.

● Claim 40: "determine a first cluster of …", "diminish glaring illumination of …", "determine a second, different cluster of the LEDs …", and "diminish glaring illumination of the second …", as recited on lines 21-33 of claim 40.

● Claim 48: "illuminate a portion of …, the first cluster selected based at least in part on known aimings of light associated with the first cluster determined to correspond to the first area, and the first light determined based at least in part on classifying the object …", as recited on lines 20-30 of claim 48.

● Claim 56: "determine, based on data …", "select a first cluster …", and "reduce intensity of …", as recited on lines 21-29 of claim 56.

● Claim 64: "select a first cluster …", "control a first change to …", "select a second, different cluster of the LEDs having…" and "control a second, …", as recited on lines 21-33 of claim 64.

● Claim 72: "determine a target based on …", "determine a fist target location …", "select a cluster of the LEDs having …", "vary illumination …", and "maintain a variance of illumination …", as recited on lines 20-31 of claim 72.

● Claim 80: "identify, based on data received from …", and "change, responsive to the positions associated with the target, first light …", as recited on lines 21-26 of claim 80.

Whereas, the cited prior art references:

▪ **Stam PCT** (Ex. PA-A) teaches a system and method of automatically controlling exterior vehicle lights includes headlamps (111), an image sensor (201) and a controller (1105) to generate control signals provided a control circuit, e.g., a headlamp drive, (1104) for turning certain exterior lights on or off, or change the brightness, aim, focus, etc. to produce various beam patterns that maximize the illuminated area in front of the vehicle without causing excessive glare in the eyes of the other drivers. *Id.* Abstract, and Fig. 11. Particularly, Stam PCT teaches a controlled vehicle 100 having an automatic headlamp dimmer includes an optical sensor system 102 comprising an image sensor 201 for detecting the headlamps 104 of an oncoming vehicle 105 and the tail lights 108 of a preceding vehicle 110; wherein, the headlamps 111 of the controlled vehicle 100 are controlled automatically to avoid shining the high beams, or bright lights, directly into the eyes of a driver of oncoming vehicle 105 or by reflection into the eyes of the driver of the preceding vehicle 110, *id.* at Figs. 1 and 11, and pages 10-11; and wherein, the microcontroller 1015 utilizes the location and direction of the vehicle identified by the GPS receiver 3450 for controlling the exterior lights on the vehicle.) *id.* at Fig. 1, 11 and 34, and page 72.

▪ **Harbers** (Ex. PA-B) teaches a headlamp and dynamic lighting system for a vehicle (1) comprising a headlamp (2, 3) provided with a light source (4, 5) having a plurality of opto-electronic elements (11, 12, 13, 14), preferably LEDs, which emits light beams 6, 6'…; 7, 7', … in a longitudinal direction 9. Wherein, the spatial distribution of the light beams generated by the opto-electronic elements of the light source can be continuously adjusted or switched on and

off, in dependence upon the velocity of the vehicle, the rotational position of the steering wheel, or weather conditions, etc. for providing an improved visibility of the surroundings of the vehicle. See Abstract, Figs.1A, 1B, and 2, col. 5:31-43, col. 6:58-col. 7:22, col. 7:50-51, and col. 8:1-13.

However, the Stam PCT and Harbers, either singularly or in combination, fails to teach or suggest the controller configured to perform the above-identified functional operations of the claimed inventions.

Regarding dependent claims 25-31, 33-39, 41-47, 49-55, 57-63, 65-71, 73-79, and **81-87,** each directly or indirectly depends on its base claims 24, 32, 40, 48, 56, 64, 72, or 80, respectively, and is allowed at least due to its dependency.

Any comments considered necessary by applicant must be submitted no later than the payment of the issue fee and, to avoid processing delays, should preferably accompany the issue fee. Such submissions should be clearly labeled "Comments on Statement of Reasons for Allowance."

Response to Amendment

6. Patent Owner's Response under 37 CFR 1.550 with an Amendment filed on May 16, 2022 in response to the Reexamination Non-Final Office action mailed on March 16, 2022 has been entered. The '551 patent claim 6 has been canceled and new claims 24-87 are maintained. Thus, claims 24-87 are pending, and they are considered in this reexamination proceeding.

Response to Arguments

7. **Claim limitation "electronic circuit apparatus …" in claims 6, 24, 32, 40, 48, 56, 64, 72 and 80 invokes 35 U.S.C. 112(f) or pre-AIA 35 U.S.C. 112(6), and is read on the "logic control electronics unit 7" of the '551 patent disclosure, *id.* at Fig. 1, and col. 25:35-50.**

Applicant argued, see pages 2-3 of the May 16, 2022 Response, that the claim limitation "electronic circuitry apparatus" recited in claims 6, 24, 32, 40, 48, 56, 64, 72 and 80 does not invoke 35 U.S.C. 112(f) or pre-AIA 35 U.S.C. 112(6) because of:

(i) The Federal Circuit has ruled that "the term 'circuit' coupled with a description in the claims of the circuit's operation typically conveys necessary structure." See e.g., *Linear Tech Corp. v. Impala Linear Corp.*, 379 F.3d 1311, 1230-21 (Fed. Cir. 2004), *Apex Inc. v. Raritan Comp., Inc.*, 325 F.3d 1364, 1374 (Fed. Cir. 2003). Cited MPEP 2181(I)(A).

(ii) The claim limitation "electronic circuitry apparatus" includes a generic placeholder "apparatus", which is modified by "sufficient structure … for performing the claimed function", i.e., "electronic circuitry", as such prong (C) is not satisfied and thus 112(6) does not apply; and that a "circuit" or "circuitry" are structural terms that have been found not to invoke 112(6), cited MPEP 2181(I)(A).

(iii) The specification is replete with examples of circuits and electronic circuitry (e.g., "The electric power … from the power source 1, or is conditioned within the DLF2, by power conditioning elements and circuitry 5"), which provide a sufficiently definite meaning as the name for structure that performs the function, cited MPEP 2181, and sic. col. 19, ll. 66-67; and "Thus, based on the claim language, the 'electronic circuitry apparatus for the controlled powering of the light source' is the 'light source controlling power circuitry' with which the 'controller' communicates", and that "while the electronic circuitry apparatus being part of the controller is a possible construction under 112(6) of 'electronic circuitry apparatus,'" Cited sic. col. 15, ll. 34-36.

Applicant's arguments have been fully considered but they are not persuasive.

(i) Firstly, the Federal Circuit has held that applicants (and reexamination patentees) before the USPTO have the opportunity and the obligation to define their inventions precisely during proceedings before the USPTO. See *In re Morris,* 127 F.3d 1048, 1056–57, 44 USPQ2d 1023, 1029–30 (Fed. Cir. 1997); *In re Zletz,* 893 F.2d 319, 322, 13 USPQ2d 1320, 1322 (Fed. Cir. 1989) (manner of claim interpretation that is used by courts in litigation is not the manner of claim interpretation that is applicable during prosecution of a pending application before the USPTO); *Sage Prods., Inc. v. Devon Indus., Inc.,* 126 F.3d 1420, 1425, 44 USPQ2d 1103, 1107 (Fed. Cir. 1997) (patentee who had a clear opportunity to negotiate broader claims during prosecution but did not do so, may not seek to expand the claims through the doctrine of equivalents, for it is the patentee, not the public, who must bear the cost of failure to seek protection for this foreseeable alteration of its claimed structure). See MPEP 2181 (I.).

(ii) Secondly, the claim limitation "electronic circuitry apparatus" includes a non-structural generic placeholder "apparatus for", *id.* MPEP 2181 I (A), which is preceded by a non-structural modifier, i.e., "electronic circuitry", which does not have any generally understood structural meaning in the art, was not defined in the claim and/or the specification, had no dictionary definition, nor any generally understood meaning in the art; and thus, the term does not connote sufficient structure to a person of ordinary skill in the art to avoid 35 U.S.C. 112(f) or pre-AIA 35 U.S.C. 112(6) treatment. See MPEP 2181 I.(C).

(iii) Lastly, based on the '551 patent prosecution history and the applicant's arguments above, the claim limitation "electronic circuitry apparatus for the controlled powering of the light source and other illuminating device elements" in claim 6 or its similar limitation in claims 24-87 is a controller described in a preferred embodiment as "logic control electronics unit 7" of the '551 patent disclosure, *id.* at Fig. 1, and col. 25:35-50.

Notice of Concurrent Proceeding(s)

8. With respect to the Report on the filing or determination on an action regarding a Patent or Trademark (Notice of Concurrent Proceeding(s)) under 35 U.S.C. § 290 and/or 15 U.S.C. § 1116, form AO 120, filed on 06/19/2022, the material has been considered with this action, and it has been placed in the prosecution file record.

9. Notice to the Patent Owner

MPEP § 2256 provides in pertinent part:

AFTER THE NOTICE OF INTENT TO ISSUE *EX PARTE* REEXAMINATION CERTIFICATE (NIRC):

Once the NIRC has been mailed, the reexamination proceeding is forwarded for publication of the reexamination certificate. Thus, when the patent owner provides a submission of patents and printed publications or other information described in **37 CFR 1.98(a)** after the NIRC has been mailed, the proceeding has entered the publication process for printing the reexamination certificate. To automatically delay prosecution by pulling the proceeding from that process when such a submission has been filed, without more, would be contrary to the Office's statutory mandate for "special dispatch", as set forth in **35 U.S.C. 305**.

For this reason, the submission must be accompanied by (A) a factual accounting providing a sufficient explanation of why the information submitted could not have been submitted earlier, (B) an unequivocal statement that one or more claims are unpatentable, and (C) an amendment to such claim or claims, and an explanation as to how the amendment causes such claim or claims to be patentable. This must be provided via a petition under **37 CFR 1.182** (with the petition fee) for entry and consideration of the information submitted after NIRC. These requirements are necessary to provide a basis for interrupting the proceeding after NIRC, in order for the Office to comply with its statutory mandate for "special dispatch".

CORRESPONDENCE AND INQUIRY AS TO OFFICE ACTIONS

10. All correspondence related to this ex parte reexamination proceeding should be directed as follows:

By EFS: Registered users may submit via the electronic filing system EFS-Web, at https://efs.uspto.gov/efile/myportal/efs-registered

For EFS-Web transmissions, 37 C.F.R. § 1.8(a)(1)(i) (C) and (ii) states that correspondence (except for a request for reexamination and a corrected or replacement request for reexamination) will be considered timely filed if (a) it is transmitted via the Office's electronic filing system in accordance with 37 C.F.R. § 1.6(a)(4), and (b) includes a certificate of transmission for each piece of correspondence stating the data of transmission, which is prior to the expiration of the set period of time in the Office action.

Any inquiry by the patent owner concerning this communication or earlier communications from the Legal Advisor or Examiner, or as to the status of this proceeding, should be directed to the Central Reexamination Unit at telephone number (571) 272-7705.

Signed:

/HENRY N TRAN/
Primary Examiner, Art Unit 3992

Conferees:

/ANGELA M LIE/
Primary Examiner, Art Unit 3992

/ANDREW J. FISCHER/
Supervisory Patent Reexamination Specialist, Art Unit 3992

UNITED STATES PATENT AND TRADEMARK OFFICE

CLERK CHECKLIST - REEXAMINATION

☑ *Ex Partes* Reexam ☐ *Inter Partes* Reexam

CONTROL NO(S).

9 0/014,815

9 _____

9 _____

PATENT REEXAMINATION SPECIALIST or REEXAMINATION CLERK:

All of the following items must be completed by you:

A. After completion, the following items should be forwarded (together), via the CRU SPE (for reexams in CRU) or TC SPRE (for reexams in TC), to the Office of Patent Legal Administration. Check box(es) when item is present.

- ☑ **1.** This Reexamination Clerk Checklist (PTO-1517)
- ☑ **2.** Examiner Checklist – Reexamination (PTO-1516)
- ☑ **3.** Patent file wrapper (if one exists)

B. Mark the following boxes upon ensuring that the item is present in the file history, in correct form, and complete:

☑ **1.** The title report, Patent Abstract of Title, or a statement under § 3.73(b)

Filed/Prepared by the Office [Give date & IFW doc code of latest document in IFW]

IFW doc code: RXTTLRPT Date: 09/14/2021

(Note Item 26 of Examiner Checklist)

☑ **2.** All PTO-892 and PTO-1449 reference citation sheets

Total no. of sheets: 2

C. Mark each of the following boxes upon ensuring that the item has been completed by the examiner.

Items on IFW – Issue Classification form

- ☑ **1.** Patent Number
- ☑ **2.** Reexamination Control Number
- ☑ **3.** International Classification
- ☑ **4.** Original U.S. Classification
- ☑ **5.** Cross References (Entry present or a dash placed in the x-ref. box for no entry.)
- ☑ **6.** Assistant Examiner (if any – for reexam in TC)
- ☑ **7.** Primary Examiner
- ☑ **8.** Claim No. for O.G.
- ☑ **9.** Drawing Fig., if any, for certificate and for O.G.
- ☑ **10.** Index of Claims

Items on IFW – Reexamination form

- ☑ **11.** Co-pending Office Proceedings. (information or "No concurrent Office proceedings" entered in lower left hand box)
- ☑ **12.** Reexamination Certificate No. (e.g. C1, C2, C3 to be entered in "Certificate Number" box)
- ☑ **13.** Litigation Review

Items on IFW – Search Notes form

- ☑ **14.** Reexamination Field of Search ("None" entered, if no search)

D. In each of the following items mark either the "YES" or "NO" box.

YES	NO	
☐	☑	**1.** Are there any amendments to the description? If yes, identify the IFW doc code(s) and dates of the document(s) containing the amendments. (Note Item 1 of Examiner Checklist). IFW doc code: _____ Date: _____ IFW doc code: _____ Date: _____ IFW doc code: _____ Date: _____
☐	☑	**2.** Are there any changes to the patent drawings? If yes, identify the following. (Note Item 2 of Examiner Checklist). IFW doc code: _____ Date: _____ Fig. No(s). containing changes: _____ IFW doc code: _____ Date: _____ Fig. No(s). containing changes: _____
☐	☑	**3.** Was a terminal disclaimer filed DURING reexamination and approved? (Note Item 3 of Examiner Checklist.) If yes, the Terminal Disclaimer "approved" box on the IFW – Terminal Disclaimer form must be checked. Also, indicate the document(s) containing the terminal disclaimer(s). IFW doc code: _____ Date: _____ IFW doc code: _____ Date: _____
☐	☑	**4.** Have any certificates of correction been issued? If yes, indicate date(s) issued. (Note Item 4 of Examiner Checklist.) _____
☐	☑	**5.** Has any document been submitted indicating the names of registered attorneys or agents or a law firm to be published on the reexam certificate? If yes, indicate the filing date and IFW doc code of the document containing the names. (Note Item 5 of Examiner Checklist.) Filed [Give filing date(s) & IFW doc code(s)]: IFW doc code: _____ Date: _____ IFW doc code: _____ Date: _____
☐	☑	**6.** Was/were any statutory disclaimers or dedications filed prior to, or during, the reexamination, and approved? If yes, complete the following, and place copy of approved dedication/statutory disclaimer in reexamination file. (Note Items 9 & 10 of the Examiner Checklist.) 1a. Filed - IFW doc code: _____ Date: _____ 1b. O.G. citation: _____ 1c. Claims disclaimed/dedicated: _____ 2a. Filed - IFW doc code: _____ Date: _____ 2b. O.G. citation: _____ 2c. Claims disclaimed/dedicated: _____

YES NO

☐ ☑ **7.** Have any claims been amended? A claim is "amended" if there is any change to its text. If yes, list all amended claims by the most recent IFW doc code date of the document which contains the final version of all of the amended claims. (Note Item 12 of Examiner Checklist.)

IFW doc code: _____ Date: _____

Claims: _____

IFW doc code: _____ Date: _____

Claims: _____

IFW doc code: _____ Date: _____

Claims: _____

IFW doc code: _____ Date: _____

Claims: _____

(Note: these claims will be printed on the reexamination certificate.)

☑ ☐ **8.** Have new claims been added and allowed during the reexamination? If yes, (1) indicate the filing date and IFW doc code of the document containing the final version of the allowed, new claims and (2) list the claims by final number. (Note Item 14 of Examiner Checklist.)

IFW doc code: CLM Date: 07/30/2021

Claims: 24-87

IFW doc code: _____ Date: _____

Claims: _____

IFW doc code: _____ Date: _____

Claims: _____

IFW doc code: _____ Date: _____

Claims: _____

(Note: these claims will be printed on the reexamination certificate.)

E. Have any of the following items been changed or added since the patent was issued? If yes, indicate the filing date and IFW doc code of the document containing the change/addition and mark the appropriate boxes upon ensuring statement is correct. Certificate of Correction changes are not to be indicated here; instead see Item D.4.

YES	NO	INID CODE		
☐	☑	(54)	**1.**	Title of Invention. (Note Item 21 of Examiner Checklist.) IFW doc code: _____ Date: _____ ☐ Update information has been entered on bib data sheet.
☐	☑	(75) or	**2.**	Inventor(s). (Note Item 22 of Examiner Checklist.)
☐	☑	(76)		IFW doc code: _____ Date: _____
☐	☑	(73)	**3.**	Assignee (if any): Compare assignee information on (a) title report, Patent Abstract of Title, or 37 CFR 3.73(b) statement (see Item B1 above), with (b) printed patent entry, and (c) reexamination bib data sheet entry. Assignment/ owner document: IFW doc code: _____ Date: _____ ☐ Update information has been entered on bib data sheet.

YES	NO	INID CODE	
			4. Continuing Data. (Note Item 23 of Examiner Checklist.)
☐	☑	(60)	**a.** -- Combination of Division and Continuation and/or C.I.P. Document adding data: IFW doc code: _____ Date: _____ -- Provisional Application(s) Document adding data: IFW doc code: _____ Date: _____
☐	☑	(62)	**b.** Division(s). Document adding data: IFW doc code: _____ Date: _____
☐	☑	(63)	**c.** Continuation(s) and/or C.I.P. Document adding data: IFW doc code: _____ Date: _____
☑	☐	(64)	**d.** Reissue(s) where patent reissues during pendency of reexam. Amendment document containing the statement "This is a reissue of 16/858,342 filed 4/24/20 ". IFW doc code: RXNOCP Date: May 6, 2022 ☐ Update information has been entered on reexamination bib data sheet. ☐ Update information has been entered in the first sentence of the specification following the title. 37 CFR 1.78(a).
☐	☑	(30)	**5.** Foreign Priority. (Note Item 24 of Examiner Checklist.) Document adding data: IFW doc code: _____ Date: _____ ☐ Update information has been entered on reexamination bib data sheet.
☐	☑	(57)	**6.** Abstract. (U - Note Item 25 of Examiner Checklist.) IFW doc code: _____ Date: _____

EXAMINER	DATE	CRU SPE/TC SPRE REVIEW	DATE
/MONICA A GRAVES/ Primary Examiner, OCRU	26 July 2022	/ANDREW J FISCHER/ Supervisory Patent Examiner, Art Unit 3992	26 July 2022

UNITED STATES PATENT AND TRADEMARK OFFICE

EXAMINER CHECKLIST - REEXAMINATION

☑ *Ex Partes* Reexam ☐ *Inter Partes* Reexam

CONTROL NO(S).

9 0/014,815

9 _____

9 _____

EXAMINER:

All items must be reviewed and completed by the examiner. After completion, this checklist and the reexamination IFW Action Folder (and the patent file wrapper, if one exists) should be forwarded (a) for a reexam in the TC, to the reexamination clerk, or (b) for a reexam in the CRU, to the Patent Reexamination Specialist. Note: If a previous reexamination certificate has been issued, all references below to "the patent" should be replaced by "previous reexamination certificate" and all data entries should be made accordingly.

☐ YES ☑ NO **1.** Are there any amendments to the description? If yes, indicate (a) the doc code and date of the document containing the amendments and (b) the patent column number(s) and beginning and ending lines of the paragraph(s) containing the changes.

(1)(a) IFW doc code _____ Date _____

(1)(b) beginning _____

(1)(b) end line _____

(2)(a) IFW doc code _____ Date _____

(2)(b) beginning _____

(2)(b) end line _____

☐ YES ☑ NO **2.** Are there any amendments to the patent drawings? If yes, indicate (a) Fig. No. containing the change(s), (b) the doc code and date of the document containing the NEW sheet of drawings, and (c) a brief description of the change(s), e.g., "reference numerals 10 and 11 have been added to Fig. 1."

(1)(a) Fig. No(s). _____

(1)(b) IFW doc code _____ Date _____

(1)(c) The drawings figure(s) have been changed as follows: _____

(2)(a) Fig. No(s). _____

(2)(b) IFW doc code _____ Date _____

(2)(c) The drawings figure(s) have been changed as follows: _____

☐ YES ☑ NO **3.** Was a terminal disclaimer filed and approved DURING reexamination? If terminal disclaimer approved, "approved" box on the IFS - Terminal Disclaimer form (available in OACS) must be checked. Also, give the doc code and date(s) of each document containing approved terminal disclaimer.

Terminal Disclaimer IFW doc code _____ Date _____

Terminal Disclaimer IFW doc code _____ Date _____

Terminal Disclaimer IFW doc code _____ Date _____

☐ YES ☑ NO **4.** Have any certificates of correction to the patent been issued? If yes, give date(s) issued (the date signed and sealed by the USPTO Director on the certificate of correction).

Dates issued: _____

☐ YES ☑ NO **5.** Has a document been submitted indicating the names of the registered attorneys or agents or a law firm to be printed on the reexaminations certificate? If yes, indicate the doc code and date of the document containing the names. (Must be a separate document addressed solely to this issue.)

IFW doc code _____ Date _____

☐ YES ☑ NO **6.** Did a litigation search, or any other part of the record, indicate the existence of litigation with respect to the patent being reexamined? Has an entry been made in the "Litigation Review" box of the IFW - Reexamination form? If yes, and a court decision has been issued, complete the following entry. Such decisions include final court decisions (even if still appealable), vacate decisions, remands, and decisions as to the merits of the patent claims. Non-merits decisions on motions such as for a new venue, a new trial/discovery date, or sanctions are not to be entered.

"Attention is directed to the decision of:

_____

relating to this patent. This reexamination may not have resolved all questions raised by this decision. See 37 CFR 1.552(c) for ex parte reexam and 37 CFR 1.906(c) for inter partes reexam." (Enter case name, court, and date of decision.)

☑ YES ☐ NO **6.1** Is there a reissue application/reexamination proceeding pending at this point, with which this reexamination proceeding has not been merged? If yes, (a) fill in the application or reexamination control number(s), and the filing date(s), and (b) check the appropriate box(es) (two boxes–if both reissue & reexam are pending).

☑ >> "At the time of issuance and publication of this certificate, the patent remains subject to pending reissue application number 16/858,342 filed 24 April 2020 .

The claim content of the patent may be subsequently revised in the reissue proceeding."

☐ >> "At the time of issuance and publication of this certificate, the patent remains subject to pending reissue application numbers _____ filed _____ respectively.

The claim content of the patent may be subsequently revised in the reissue proceedings."

☐ >> "At the time of issuance and publication of this certificate, the patent remains subject to pending reexamination control number _____ filed _____ .
The claim content of the patent may be subsequently revised in the reexamination proceeding."

☐ >> "At the time of issuance and publication of this certificate, the patent remains subject to pending reexamination control numbers _____ filed _____ respectively.

The claim content of the patent may be subsequently revised in the reexamination proceedings."

For items 7-16, mark the "YES" box(es) where appropriate and complete the statement. If not applicable, mark the "NO" box(es). Patent claims retain their original number. All **NEW** allowed claims should be renumbered, if necessary, to immediately follow the highest numbered patent claim. Note that a Claim is "amended" if there is **ANY** change to its text. A claim number should **NOT** be repeated in items 7-16.

ALL the **ORIGINAL** patent claims and **ONLY** new renumbered claims must be listed in items 7-16. Only original patent claims are to be listed in items 7-13 and 15-16. Only new allowed claims are listed in item 14; cancelled new claims are not listed anywhere on this form.

☐ YES ☑ NO **7.** The patentability of claim(s) _____

is confirmed.

☐ YES ☑ NO **8.** Claim(s) _____

was (were) previously cancelled. (Relates to a **prior** proceeding.)

☐ YES ☑ NO **9.** Claim(s) _____

was (were) previously disclaimed. (Statutory disclaimer **prior** to **present** reexam.)

☐ YES ☑ NO **10.** Claim(s) _____

is (are) now disclaimed. (Statutory disclaimer in present reexamination.)

☑ YES ☐ NO **11.** Claim(s) 6

is (are) cancelled.

(**Examiner Note:**item 11 is not to be used for new claims that were cancelled. Cancelled new claims are not entered on this form.)

☐ YES ☑ NO **12.** Claim(s) _____

is (are) determined to be patentable as amended.

(**Printer Note:** these claims are to be printed on the reexamination certificate.)

☐ YES ☑ NO **13.** Claim(s) _____

dependent on an amended claim, is (are) determined to be patentable.

(**Examiner Note:** item 13 is to be used for dependent claims whose text has not changed. Dependent claims with changes in the text are "amended claims" which must be listed in item 12, above.)

☑ YES ☐ NO **14.** New claim(s) 24-87

is (are) added and determined to be patentable.

(**Printer Note:** these claims are to be printed on the reexamination certificate.)

☑ YES ☐ NO **15.** Claim(s) 1-5 and 7-23

was (were) not reexamined.

☐ YES ☑ NO **16.** Other (identify claims and status) _____

Mark the following boxes upon ensuring that the following statements relating to the IFW – Issue Classification form (available in OACS) are correct.

☑ **17.** The international classification (updated to reflect the current format of the most recent edition) includes all international classifications presently listed on the patent.

☑ **18.** The reexamination original U.S. classification is the same as the current original U.S. classification of the patent.

☑ **19.** All current cross-reference classifications are included.

Question 20 has been removed from this document, as it is no longer relevant.

For items 21-25, mark the "YES" or "NO" box indicating whether the item has been changed or added during the reexamination. If yes, indicate doc code date of document containing the change or addition. Certificate of Correction changes are not to be indicated here; instead see Item 4.

☐ YES ☑ NO INID CODE: (54) **21.** Title of Invention.
IFW doc code _____ Date _____

☐ YES ☑ NO INID CODE: (75) **22.** Inventor(s)
- OR -
☐ YES ☑ NO INID CODE: (76) IFW doc code _____ Date _____

23. Continuing Data

☐ YES ☑ NO INID CODE: (60) **a.** -- Combination of Division and Continuation and/or C.I.P.
Give doc code and date of document adding data:
IFW doc code _____ Date _____

-- Provisional Application(s)
Give doc code and date of document adding data:
IFW doc code _____ Date _____

☐ YES ☑ NO INID CODE: (62) **b.** Division(s)
Give doc code and date of document adding data:
IFW doc code _____ Date _____

☐ YES ☑ NO INID CODE: (63) **c.** Continuation(s) and/or C.I.P.
Give doc code and date of document adding data:
IFW doc code _____ Date _____

☑ YES ☐ NO INID CODE: (64) **d.** Reissue(s)
Give doc code and date of document adding data:
IFW doc code NTC.CONCPROC Date 06 May 2022

☐ YES ☑ NO INID CODE: (30) **24.** Foreign Priority
Give doc code and date of document adding data:
IFW doc code _____ Date _____

☐ YES ☑ NO INID CODE: (57) **25.** Abstract
Give doc code and date:
IFW doc code _____ Date _____

26. For item 26, (a) check the box indicating which document identifies the correct, current **owner/assignee** of the patent, and (b) indicate the date of the document that you checked.

(**Examiner Note:** only **one** box is to be checked and completed.)

☑ (a) Title Report, (b) Prepared [Give doc code and date]

IFW doc code RXTTLRPT Date 14 September 2021

☐ (b) § 3.73 (b) Statement, (b) Filed [Give doc code and date]

IFW doc code _____ Date _____

(**Examiner Note:** Give the latest document, unless the record reflects that an earlier document gives the current patent owner/assignee.)

EXAMINER	DATE	CRU SPE/TC SPRE REVIEW	DATE
/HENRY N TRAN/ Primary Examiner, Art Unit 3992	19 July 2022	/ANDREW J FISCHER/ Supervisory Patent Examiner, Art Unit 3992	22 July 2022

SPERO EX. 2023

Reexamination	Application/Control No.	Applicant(s)/Patent Under Reexamination
	90/014,815	9955551B2
	Certificate Date	Certificate Number
		C1

Requester Correspondence Address: ☑ **Patent Owner** ☐ **Third Party**

Brooks Kushman
11000 Town Center
22nd Floor
Southfield, MI 48075

LITIGATION REVIEW ☑	HT (examiner initials)	12 July 2022 (date)
Case Name		Director Initials
1:22cv751, Torchlight Technologies LLC V. Daimler Ag Et Al. - US Dist. Court. Delaware (open)		
1:22cv752, Torchlight Technologies LLC V. General Motors LLC Et Al. - US Dist. Court Delaware (Open)		

COPENDING OFFICE PROCEEDINGS	
TYPE OF PROCEEDING	**NUMBER**
Reissue 16/858,342 (suspended)	

/HENRY N TRAN/ Primary Examiner, Art Unit 3992	/ANGELA M LIE/ Primary Examiner, Art Unit 3992

Search Notes	Application/Control No.	Applicant(s)/Patent Under Reexamination
	90/014,815	9955551B2
	Examiner	**Art Unit**
	Henry Tran	3992

CPC - Searched*		
Symbol	**Date**	**Examiner**

CPC Combination Sets - Searched*		
Symbol	**Date**	**Examiner**

US Classification - Searched*			
Class	**Subclass**	**Date**	**Examiner**

* See search history printout included with this form or the SEARCH NOTES box below to determine the scope of the search.

Search Notes		
Search Notes	**Date**	**Examiner**
Reviewed the 9,955,551 patent file's Prosecution History	02/17/2022	HT
Searched PTAB Trial Proceedings for US Patent 9,955,551	03/02/2022	HT
Reviewed/conferenced with PE. A. Lie and SPE. A. Fischer	03/03/2022 & 03/10/2022	HT
Searched PTAB Trial Proceedings for US Patent 9,955,551	07/12/2022	HT
Reviewed/conferenced with PE. A. Lie and SPE. A. Fischer	07/21/2022	

Interference Search			
US Class/CPC Symbol	**US Subclass/CPC Group**	**Date**	**Examiner**

/HENRY N TRAN/ Primary Examiner, Art Unit 3992	

Issue Classification	Application/Control No.	Applicant(s)/Patent Under Reexamination
	90/014,815	9955551B2
	Examiner	**Art Unit**
	Henry Tran	3992

CPC						
Symbol					**Type**	**Version**
F21S	/	41	/	147	F	2018-01-01
F21K	/	9	/	23	I	2016-08-01
H05B	/	45	/	395	I	2020-01-01
H05B	/	45	/	20	I	2020-01-01
B60Q	/	1	/	1423	I	2013-01-01
H05B	/	3	/	008	I	2013-01-01
B60Q	/	1	/	085	I	2013-01-01
F21K	/	9	/	232	I	2016-08-01
F21S	/	41	/	65	I	2018-01-01
F21V	/	23	/	0471	I	2013-01-01
H05B	/	47	/	115	I	2020-01-01
H05B	/	47	/	105	I	2020-01-01
B60Q	/	1	/	04	I	2013-01-01
A01K	/	1	/	00	I	2013-01-01
H05B	/	47	/	11	I	2020-01-01
F21S	/	41	/	43	I	2018-01-01
F21V	/	23	/	0464	I	2013-01-01
F21V	/	23	/	0478	I	2013-01-01
F21V	/	19	/	02	I	2013-01-01
H05B	/	47	/	10	I	2020-01-01
F21S	/	4	/	28	I	2016-01-01
F21S	/	41	/	153	I	2018-01-01

CPC Combination Sets								
Symbol					**Type**	**Set**	**Ranking**	**Version**
	/		/					

NONE (Assistant Examiner)	(Date)	**Total Claims Allowed:** 64	
/HENRY N TRAN/ Primary Examiner, Art Unit 3992 (Primary Examiner)	19 July 2022 (Date)	O.G. Print Claim(s) 24	O.G. Print Figure 1

Issue Classification	Application/Control No.	Applicant(s)/Patent Under Reexamination
	90/014,815	9955551B2
	Examiner	**Art Unit**
	Henry Tran	3992

INTERNATIONAL CLASSIFICATION				
CLAIMED				
F21S41/147	/	41	/	147
B60Q1/08	/	1	/	08
F21S41/65	/	41	/	65
H05B47/115	/	47	/	115
H05B47/105	/	47	/	105
B60Q1/04	/	1	/	04
H05B47/11	/	47	/	11
F21S41/43	/	41	/	43
F21V19/02	/	19	/	02
H05B47/10	/	47	/	10

NON-CLAIMED				
	/		/	

US ORIGINAL CLASSIFICATION	
CLASS	**SUBCLASS**

CROSS REFERENCES(S)						
CLASS	**SUBCLASS (ONE SUBCLASS PER BLOCK)**					
315	77	307	312	152		

NONE (Assistant Examiner)	(Date)	**Total Claims Allowed:** 64	
/HENRY N TRAN/ Primary Examiner, Art Unit 3992 (Primary Examiner)	19 July 2022 (Date)	O.G. Print Claim(s) 24	O.G. Print Figure 1

Issue Classification	Application/Control No.	Applicant(s)/Patent Under Reexamination
	90/014,815	9955551B2
	Examiner	**Art Unit**
	Henry Tran	3992

☐ Claims renumbered in the same order as presented by applicant ☐ CPA ☐ T.D. ☐ R.1.47

CLAIMS

Final	Original	Final	Original	Final	Original	Final	Original	Final	Original	Final	Original	Final	Original	Final	Original
1	1	12	12	23	23	34	34	45	45	56	56	67	67	78	78
2	2	13	13	24	24	35	35	46	46	57	57	68	68	79	79
3	3	14	14	25	25	36	36	47	47	58	58	69	69	80	80
4	4	15	15	26	26	37	37	48	48	59	59	70	70	81	81
5	5	16	16	27	27	38	38	49	49	60	60	71	71	82	82
-	6	17	17	28	28	39	39	50	50	61	61	72	72	83	83
7	7	18	18	29	29	40	40	51	51	62	62	73	73	84	84
8	8	19	19	30	30	41	41	52	52	63	63	74	74	85	85
9	9	20	20	31	31	42	42	53	53	64	64	75	75	86	86
10	10	21	21	32	32	43	43	54	54	65	65	76	76	87	87
11	11	22	22	33	33	44	44	55	55	66	66	77	77		

NONE (Assistant Examiner)	(Date)	**Total Claims Allowed:** 64	
/HENRY N TRAN/ Primary Examiner, Art Unit 3992 (Primary Examiner)	19 July 2022 (Date)	O.G. Print Claim(s) 24	O.G. Print Figure 1

Bibliographic Data

Application No: 90/014,815

Foreign Priority claimed: ○ Yes ◉ No

35 USC 119 (a-d) conditions met: ☐ Yes ☑ No ☐ Met After Allowance

Verified and Acknowledged: /HENRY N TRAN/ [ ]

Examiner's Signature Initials

Title: Detector Controlled Illuminating System

FILING or 371(c) DATE	CLASS	GROUP ART UNIT	ATTORNEY DOCKET NO.
07/30/2021 **RULE**	315	3992	TRCH0102RX

APPLICANTS

INVENTORS

9955551B2,

YECHEZKAL EVAN SPERO, MOSHAV TIFACH, ISRAEL

PATENT OWNER,

CONTINUING DATA

This application is a REX of 13357549 01/24/2012 PAT 9955551

13357549 has PRO of 61535981 09/17/2011

13357549 is a CIP of 10604360 07/14/2003 PAT 8100552

10604360 has PRO of 60395308 07/12/2002 *

(*) Data provided by applicant is not consistent with PTO record

FOREIGN APPLICATIONS

IF REQUIRED, FOREIGN LICENSE GRANTED**

STATE OR COUNTRY

ADDRESS

Brooks Kushman
1000 Town Center
22nd Floor
Southfield, MI 48075
UNITED STATES

FILING FEE RECEIVED

$225

IN THE UNITED STATES PATENT AND TRADEMARK OFFICE

In re application of:

Yechezkal Evan SPERO Group Art Unit: 3992

Application/Control No.: 90/014,815 Examiner: Tran, Henry N.

Patent No.: 9,955,551

Filed: July 30, 2021

For: DETECTOR CONTROLLED ILLUMINATING SYSTEM

Attorney Docket No.: TRCH0102RX

COMMENTS ON STATEMENTS OF REASONS FOR PATENTABILITY AND/OR CONFIRMATION

Mail Stop *Ex Parte* Reexamination
Attn: Central Reexamination Unit
Commissioner for Patents
P.O. Box 1450
Alexandria, VA 22313-1450

Dear Commissioner:

Comments on the Notice of Intent to Issue *Ex Parte* Reexamination Certificate ("NIRC") in the above-referenced examination are given below.

REMARKS

Applicant maintains that claim interpretation under 35 U.S.C. 112(6) is improper based on the MPEP and relevant caselaw as described in detail in Applicant's previously filed response. However, whether interpreted under 35 U.S.C. 112(6) or not, Applicant agrees that the pending claims are patentable over the prior art of record for at least the reasons identified in the NIRC.

While the Statement of Reasons For Patentability identifies at least one claim feature from each independent claim as supported by at least one embodiment in the '551 patent, Applicant maintains that proper interpretation of each and every claim element, whether interpreted under 35 U.S.C. 112(6) or not, requires consideration of the understanding of a person of ordinary skill in the art in light of the entirety of the embodiments described in the specification and illustrated in the drawings. *See, Oatey v. IPS*, 514 F.3d 1271, 1276-1277 (Fed. Cir. 2008). However, because there is no outstanding objection or rejection of any pending claim, only a disagreement with respect to examination procedure under the MPEP and caselaw relative to applicability of a particular statutory provision, any further prosecution by petition or appeal appears to be unavailable.

Respectfully submitted,

Yechezkal Evan SPERO

By: /Sangeeta G. Shah/
Brooks Kushman P.C.
Reg. No. 38,614
Attorneys for Patentee

Date: August 8, 2022

BROOKS KUSHMAN P.C.
1000 Town Center, 22nd Floor
Southfield, MI 48075-1238
Phone: 248-358-4400
Fax: 248-358-3351

Electronic Acknowledgement Receipt

EFS ID:	46358390
Application Number:	90014815
International Application Number:	
Confirmation Number:	6654
Title of Invention:	Detector Controlled Illuminating System
First Named Inventor/Applicant Name:	9955551B2
Customer Number:	22045
Filer:	Sangeeta G Shah/Fiona Archer
Filer Authorized By:	Sangeeta G Shah
Attorney Docket Number:	TRCH0102RX
Receipt Date:	08-AUG-2022
Filing Date:	30-JUL-2021
Time Stamp:	09:52:36
Application Type:	Reexam (Patent Owner)

Payment information:

Submitted with Payment	no

File Listing:

Document Number	Document Description	File Name	File Size(Bytes)/ Message Digest	Multi Part /.zip	Pages (if appl.)
1	Patent Owner Comments after Action Closing Prosecution	TRCH0102RX_Patent_Owners_Statement_Order_Response.pdf	117805 d242c09f945a678b6bf63bcbc7f6c7e30143e0ef	no	2

Warnings:

SPERO EX. 2023

Information:	
Total Files Size (in bytes):	117805

This Acknowledgement Receipt evidences receipt on the noted date by the USPTO of the indicated documents, characterized by the applicant, and including page counts, where applicable. It serves as evidence of receipt similar to a Post Card, as described in MPEP 503.

New Applications Under 35 U.S.C. 111
If a new application is being filed and the application includes the necessary components for a filing date (see 37 CFR 1.53(b)-(d) and MPEP 506), a Filing Receipt (37 CFR 1.54) will be issued in due course and the date shown on this Acknowledgement Receipt will establish the filing date of the application.
National Stage of an International Application under 35 U.S.C. 371
If a timely submission to enter the national stage of an international application is compliant with the conditions of 35 U.S.C. 371 and other applicable requirements a Form PCT/DO/EO/903 indicating acceptance of the application as a national stage submission under 35 U.S.C. 371 will be issued in addition to the Filing Receipt, in due course.
New International Application Filed with the USPTO as a Receiving Office
If a new international application is being filed and the international application includes the necessary components for an international filing date (see PCT Article 11 and MPEP 1810), a Notification of the International Application Number and of the International Filing Date (Form PCT/RO/105) will be issued in due course, subject to prescriptions concerning national security, and the date shown on this Acknowledgement Receipt will establish the international filing date of the application.

US009955551C1

(12) **EX PARTE REEXAMINATION CERTIFICATE** (12119th)

United States Patent

Spero

(10) **Number: US 9,955,551 C1**

(45) **Certificate Issued: Aug. 19, 2022**

(54) **DETECTOR CONTROLLED ILLUMINATING SYSTEM**

(76) Inventor: **Yechezkal Evan Spero**, Moshav Tifrach (IL)

Reexamination Request:
No. 90/014,815, Jul. 30, 2021

Reexamination Certificate for:

Patent No.:	**9,955,551**
Issued:	**Apr. 24, 2018**
Appl. No.:	**13/357,549**
Filed:	**Jan. 24, 2012**

Related U.S. Application Data

(63) Continuation-in-part of application No. 10/604,360, filed on Jul. 14, 2003, now Pat. No. 8,100,552.

(Continued)

(51) **Int. Cl.**

F21S 41/147	(2018.01)
B60Q 1/08	(2006.01)
F21S 41/65	(2018.01)
H05B 47/115	(2020.01)
H05B 47/105	(2020.01)
B60Q 1/04	(2006.01)
H05B 47/11	(2020.01)
F21S 41/43	(2018.01)
F21V 19/02	(2006.01)
H05B 47/10	(2020.01)
F21K 9/23	(2016.01)
H05B 45/395	(2020.01)
H05B 45/20	(2020.01)
B60Q 1/14	(2006.01)
H05B 3/00	(2006.01)
F21K 9/232	(2016.01)
F21V 23/04	(2006.01)

(Continued)

(52) **U.S. Cl.**

CPC ***F21S 41/147*** (2018.01); ***A01K 1/00*** (2013.01); ***B60Q 1/04*** (2013.01); ***B60Q 1/085*** (2013.01); ***B60Q 1/1423*** (2013.01); ***F21K 9/23*** (2016.08); ***F21K 9/232*** (2016.08); ***F21S 4/28*** (2016.01); ***F21S 41/153*** (2018.01); ***F21S 41/43*** (2018.01); ***F21S 41/65*** (2018.01); ***F21V 19/02*** (2013.01); ***F21V 23/0464*** (2013.01); ***F21V 23/0471*** (2013.01); ***F21V 23/0478*** (2013.01); ***H05B 3/008*** (2013.01); ***H05B 45/20*** (2020.01); ***H05B 45/395*** (2020.01); ***H05B 47/10*** (2020.01); ***H05B 47/105*** (2020.01); ***H05B 47/11*** (2020.01); ***H05B 47/115*** (2020.01)

(58) **Field of Classification Search**

None

See application file for complete search history.

(56) **References Cited**

To view the complete listing of prior art documents cited during the proceeding for Reexamination Control Number 90/014,815, please refer to the USPTO's public Patent Application Information Retrieval (PAIR) system under the Display References tab.

Primary Examiner — Henry N Tran

(57) **ABSTRACT**

An illuminating device coupled with sensors or an image acquisition device and a logical controller allows illumination intensity and spectrum to be varied according to changing user needs. The system provides illumination to areas according to the principles of correct lighting practice for the optimal performance of visual tasks in the most efficient, cost effective manner. Aspects of the invention include: lighting fixtures which adapt to ambient lighting, movement, visual tasks being performed, and environmental and personal conditions affecting illumination requirements at any given instant. Lighting fixtures having spatial distribution of spectrum and intensity, providing both "background" room lighting, and "task" lighting.

At the time of issuance and publication of this certificate, the patent remains subject to pending reissue application number 16/858,342 filed Apr. 24, 2020. The claim content of the patent may be subsequently revised if a reissue patent is issued from the reissue application.

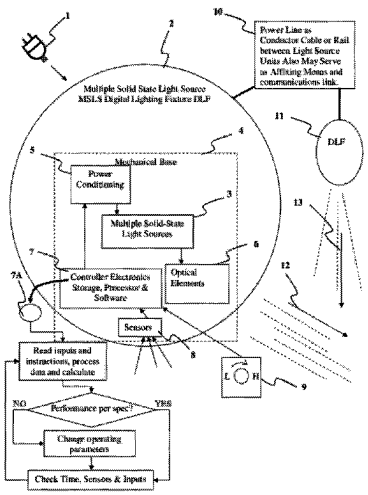

Related U.S. Application Data

(60) Provisional application No. 61/535,981, filed on Sep. 17, 2011, provisional application No. 60/395,308, filed on Jul. 12, 2002.

(51) **Int. Cl.**

A01K 1/00	(2006.01)
F21S 4/28	(2016.01)
F21S 41/153	(2018.01)

EX PARTE REEXAMINATION CERTIFICATE

THE PATENT IS HEREBY AMENDED AS INDICATED BELOW.

Matter enclosed in heavy brackets [ ] appeared in the patent, but has been deleted and is no longer a part of the patent; matter printed in italics indicates additions made to the patent.

AS A RESULT OF REEXAMINATION, IT HAS BEEN DETERMINED THAT:

Claim **6** is cancelled.

New claims **24-87** are added and determined to be patentable.

Claims **1-5** and **7-23** were not reexamined.

24. An illuminating device having automatic control of light provided to an illuminated area comprising:

a structure for incorporating illuminating device elements, wherein the structure comprises a motor vehicle;

a plurality of individually controllable LEDs incorporated in the structure via at least one headlamp mounted to the structure, each headlamp including at least one of the LEDs, the LEDs in communication with a power source;

electronic circuitry apparatus for the controlled powering of the LEDs and other of the illuminating device elements;

one or more processors;

one or more sensors, including one or more cameras, placed on die structure for detecting coordinate-specific information about the illuminated area, at least one of said cameras in communication with power, and in communication with at least one of the one or more processors;

a controller, including at least one of the one or more processors, integrated with the structure via mounting, in communication with the controlling power electronic circuitry apparatus, said controller arranged to process the information communicated from the cameras and to automatically control the light provided to the illuminated area; and

memory storing instructions that, when executed by one or more processors of the controller, enable the controller to:

determine coordinates corresponding to an other vehicle, based on the coordinate-specific information;

select a cluster of the LEDs that emit light toward at portion of the other vehicle based on the LEDs having emission aimings associated with the first coordinates; and

change emission of the selected cluster of LEDs relative to emission of other LEDs not included in the cluster to create headlamp illumination that preserves a first level of illumination illuminating past the other vehicle while preventing glare to a driver of the other vehicle.

25. The illuminating device of claim 24, wherein:

the changed emission includes a change to at least one of intensity Or color or a change of at least one LED of the cluster to a non-emitting state; and

the cluster includes a plurality of the LEDs and the cluster non-contiguous LEDs.

26. The illuminating device of claim 24, wherein the memory further stores instructions that when executed by one or more processors of the controller, enable the controller to:

identify an upcoming road curvature along a road on which the motor vehicle is traveling; and

accommodate the upcoming road curvature by adaptation of a light pattern of at least one of the at least one headlamps.

27. The illuminating device of claim 26, wherein:

the changed emission includes a change to at least one of intensity or color or a change of at least one LED of the cluster to a non-emitting state;

the cluster includes a plurality of the LEDS and the cluster includes non-contiguous LEDs; and

the memory further stores instructions that, when executed one or more processors of the controller, enable the controller to accommodate the road curvature by changing illumination in at least a direction of the road curvature by adaptation of the light pattern in at least one of color, intensity or spatial distribution by modification of light associated with one or more of the LEDs.

28. The illuminating device claim 26, wherein identification of the upcoming road curvature is based at least in part on map data and wherein the adaptation of the light pattern is based at least in part on the map data.

29. The illuminating device of claim 26, wherein the identification of the upcoming road curvature is based at least in part on sensor data provided by one or more of the sensors of the vehicle and wherein the adaptation of the light pattern is based at least in part on the sensor data.

30. The illuminating device of claim 24, further including one or more optical control elements to control light emitted from one or more of the LEDs.

31. The illuminating device of claim 30, wherein the optical control elements include at least one of one or more reflectors, refractors or lenses.

32. An illuminating device having automatic control of light provided to an illuminated area comprising:

a structure for incorporating illuminating device elements, wherein the structure comprises a motor vehicle;

plurality of individually controllable LEDs incorporated in the structure via at least one headlamp mounted to the structure, each headlamp including at least one of the LEDs, the LEDs in communication with a power source;

electronic circuitry apparatus for t controlled powering of the LEDS and other of the illuminating device elements;

one or more processors;

one or more sensors, including one or more cameras, placed on the structure for detecting coordinate-specific information about the illuminated area and positioned to capture an image of at least one target, at least one of said cameras in communication with power, and in communication with at least one of the one or more processors;

a controller, including at least one of the one or more processors, integrated with the structure via mounting, in communication with the LED controlling power electronic circuitry apparatus, said controller arranged to process the information communicated

from the cameras and to automatically control the light provided to the illuminated area; and

memory storing instructions that, when executed by one or more processors of the controller, enable the controller to:

create a beam of diminished illumination illuminating at least a portion of the at least one target with non-glaring illumination, created in a broader field of illumination having different intensity than the beam, by one or more changes to characteristics of first light of a cluster of the LEDs providing the first light directed at the at least a portion and creating the beam, the beam diminished in intensity relative to the broader field of illumination illuminating at least above and on both sides of the beam; and

follow, based at least in part on data from one or more of the cameras, the at least one target with the diminished illumination as the at least one target changes location relative to the motor vehicle.

33. The illuminating device of claim 32 wherein:

the memory further stores instructions that, when executed by one or more processors of the controller, enable the controller to select the cluster of LEDs based at least in part on known aimings of the first light associated with the first cluster having a correlation to the at least the portion, the known aimings based at least in part on at least one of known directionality of light emitted by the first cluster or known directionality of light emitted by the first cluster exiting the headlamp;

the data includes image data;

the one or more changes to characteristics of the first light include a change to at least one of intensity or color or a change of at least one LED of the cluster to a non-emitting state; and

the cluster includes a plurality of the LEDs and the cluster includes non-contiguous LEDS.

34. The illuminating device of claim 32, wherein the memory further stores instructions that, when executed by one or more processors of the controller, enable the controller to:

identity an upcoming road curvature along a road on which the motor vehicle is traveling; and

accommodate the upcoming road curvature by adaptation of a light pattern of at least one of the at least one headlamps.

35. The illuminating device of claim 14, wherein:

the one or more changes to characteristics of the first light include a change to at least one of intensity or color or a change of at least one LED of the cluster to a non-emitting state;

the cluster includes a plurality of the LEDs and the cluster includes non-contiguous LEDs;

the memory further stores instructions that, when executed by one or more processors of the controller, enable the controller to select the cluster of LEDs based at least in part on known aimings of the first light associated with the first cluster having a correlation to the at least the portion, the known aimings based at least in part on at least one of known directionality of light emitted the first cluster or known directionality of light emitted by the first cluster exiting the headlamp; and

the memory further stores instructions that, when executed by one or more processors of the controller, enable the controller to accommodate the road curvature by adapting illumination in at least a direction of the road curvature by adaptation of the light pattern in at least one of color, intensity or spatial distribution by modification of light associated with one or more of the LEDs.

36. The illuminating device of claim 34 wherein the identification of the upcoming road curvature is based at least in part on map data and wherein the adaptation of the light pattern is based at least in part on the map data.

37. The illuminating device of claim 34, wherein the identification of the upcoming road curvature is based at least in part on sensor data provided by one or more of the sensors of the vehicle and wherein the adaptation of the light pattern is based at least in part on the sensor data.

38. The illuminating device of claim 32, further including one or more optical control elements to control light emitted from one or more of the LEDs.

39. The illuminating device of claim 38, wherein the optical control elements include at least one of one or more reflectors, refractors or lenses.

40. An illuminating device having automatic control of light provided to an illuminated area comprising:

a structure for incorporating illuminating device elements, wherein the structure comprises a motor vehicle;

a plurality of individually controllable LEDs incorporated in the structure via at least one headlamp mounted to the structure, each headlamp including at least one of the LEDs, the LEDs in communication a power source;

electronic circuitry apparatus for the controlled powering of the LEDs and other of the illuminating device elements;

one or more processors;

one or more sensors, including one or more cameras, placed on the structure for detecting coordinate-specific information about the illuminated area and positioned to capture an image of at least two other vehicles, at least one of said cameras in communication with power, and in communication with at least one of the one or more processors;

a controller, including at least one of the one or more processors, integrated with the structure via mounting, in communication with the LED controlling power electronic circuitry apparatus, said controller arranged to process the information communicated from the cameras and to automatically control the light provided to the illuminated area; and

memory storing instructions that, when executed by one or more processors of the controller, enable the controller to:

determine a list cluster of the LEDs illuminating at least a first portion of a first other vehicle based at least in part on data from one or more of the sensors indicating a first position associated with the first other vehicle;

diminish glaring illumination of the first other vehicle by a first change to one or more characteristics of first light of at least the first cluster;

determine a second, different cluster of the LEDs illuminating at least a second portion of a second other vehicle based at least in part on the data indicating a second position associated with the second other vehicle;

diminish glaring illumination of the second other vehicle by a second change to one or more characteristics of second light of at least the second, different cluster;

wherein the first and second changes decrease intensity of first emission from the first cluster and second emission from the second cluster relative to a third emission, from the at least one headlamp, illuminating an area between the first and second portion.

41. The illuminating device of claim 40, wherein:

the data includes image data;

at least one of first or second change to characteristics of light associated with at least one of the first or second cluster of LEDs includes at least one of a chance to color, to intensity, or a change of at least one LEDs of the respective cluster to a non-emitting state;

at least one of the first cluster or the second cluster includes a plurality of the LEDs and at least one of the first cluster or the second cluster includes non-contiguous LEDs;

the determination of the first cluster includes selection of the first cluster based at least in part on known aimings of light associated with the first cluster having a correlation to the first position, the known aimings based at least in part on at least one of known directionality of light emitted by the first cluster or known directionality of light emitted by the first cluster exiting the headlamp; and

the determination of the second cluster includes selection of the second cluster based at least in part on known aimings light associated with the second cluster having a correlation to the second position, the known aimings based at least in part on at least one of known directionality of light emitted by the second cluster or known directionality of light emitted by the second cluster exiting the headlamp.

42. The illuminating device of claim 40, wherein the memory further stores instructions that, when executed by one or more processors of the controller, enable the controller to:

identify an upcoming road curvature along a road on which the motor vehicle is traveling; and

accommodate the upcoming road curvature by adaptation of a light pattern of at least one of the at least one headlamps.

43. The illuminating device of claim 42, wherein:

at least one of the first or second change to characteristics of the associate with at least one of the first or second cluster of LEDs includes at least one of a change to color, to intensity, or a change of at one LED of the respective cluster to a non-emitting state;

at least one of the cluster or the second cluster includes a plurality of the LEDs and at least one of the first cluster or the second cluster includes non-contiguous LEDs;

the determination of the first cluster includes selection of title first cluster based at least in part on known aimings of light associated with the first cluster having a correlation to the first position, the known aimings based at least in part on at least one of known directionality of light emitted by the first cluster or known directionality of light emitted by the first cluster exiting the headlamp;

the determination of the second cluster includes selection of the second cluster based at least in part on known aimings of light associated with the second cluster having a correlation to the second position, the known aimings based at least in part on at least one of known directionality of light emitted by the second cluster or known directionality of light emitted by the second cluster exiting the headlamp; and

the memory further stores instructions that, when executed by one or more processors of the controller, enable the controller to accommodate the road curvature by changing illumination in at least a direction of the road curvature by adaptation of light pattern in at least one of color, intensity or spatial distribution by modification of associated with one or more of the LEDs.

44. The illuminating device of claim 42, wherein the identification of the upcoming road curvature is based at least in part on map data and wherein the adaptation of the light pattern is based at least in part on the map data.

45. The illuminating device of claim 42, wherein the identification of the upcoming road curvature is based at least in part on sensor data provided by one or more of the sensors of the vehicle and wherein the adaptation of the pattern is based at least in part on the sensor data.

46. The illuminating device of claim 40, further including one or more optical control element to control light emitted from one or more of the LEDs.

47. The illuminating device of claim 46, wherein the optical control elements include at least one of one or more reflectors, refractors or lenses.

48. An illuminating device having automatic control of light provided to an illuminated area comprising:

a structure for incorporating illuminating device elements, wherein the structure comprises a motor vehicle;

a plurality of individually controllable LEDs incorporated in the structure via at least one headlamp mounted to the structure, each headlamp including at least one of the LEDs, the LEDs in communication with a power source;

electronic circuitry apparatus for the controlled powering of the LEDs and other of the illuminating device elements;

one or more processors;

one or more sensors, including one or more cameras, placed on the structure for detecting coordinate-specific information about the illuminated area, at least one of said cameras in communication with power, and in communication with at least one of the one or more processors;

a controller including at least one o the one or more processors, integrated with the structure via mounting, in communication with the LED controlling power electronic circuitry apparatus, said controller arranged to process the information, communicated from the cameras and to automatically control the light provided to the illuminated area; and

memory storing instructions that, when executed by one or more processors of the controller, enable the controller to:

illuminate a portion of at least one object, indicated by data from at least one of the one or more sensors, by selecting a first cluster of the LEDs to emit first light directed towards a first area including the at least the portion of at least one object, the first area determined based at least in part on the data, the first cluster selected based at least in part on known aimings of light associated with the first cluster determined to correspond to the first area, and the first light determined based at least in part on classifying the object based at least in part on the data; and control light emitted from the first cluster directed towards the first area to be different in at least one emission characteristic [illegible]

light determination, from second light emitted from a second, different cluster of the LEDs, directed towards one or more illuminated second areas at a common elevation with the first area and laterally adjacent to the area.

49. The illuminating device of claim 48, wherein:

the data includes image data;

the memory further stores instructions that, when executed by one or more processors of the controller, enable the controller to illuminate the at least the portion with light below at least a predefined glare level;

the at least one object includes at least one of a pedestrian, a sign, or another vehicle;

at least one of the first cluster or the second cluster includes a plurality of the LEDs and at least one of the first cluster or the second cluster includes non-contiguous LEDs;

the control of the light emitted from the first cluster includes a change of at least one LED of the cluster to a non-emitting state;

the at least one emission characteristic is different following modification by an optical control element; and

the known aimings of light associated with the first cluster is at east on part on known directionality of light emitted by LEDs of the first cluster exiting from the at least one headlamp.

50. The illuminating device of claim 48, wherein the memory further stores instructions that, when executed by one or more processors of the controller, enable the controller to:

identify an upcoming road curvature along a road on which the motor vehicle is traveling; and

accommodate the upcoming road curvature by adaptation of a light pattern of at least one of the headlamps.

51. The illuminating device of claim 50, wherein:

the memory further stores instructions that, when executed by one or more processors of the controller, enable the controller to illuminate the at least the portion with light below at least a predefined glare level;

the at least one object includes at least one of a pedestrian, a sign, or another vehicle;

at least one of the first cluster or the second cluster includes a plurality of the LEDs and at least one of the first cluster or the second cluster includes non-contiguous LEDs;

the control of the light emitted from the first cluster includes a change of at least one LED of the cluster to a non-emitting state;

the at least one emission characteristic is different following modification by an optical control element;

the known aimings of light associated with the first cluster is based at least on part on known directionality of light emitted by LEDs of the first cluster exiting from the at least one headlamp; and

the memory further stores instructions that, when executed by one or more processors of the controller, enable the controller to accommodate the road curvature by changing illumination in at least a direction of the road curvature by adaptation of the light pattern in at least one of color, intensity or spatial distribution by modification of light associated with one or more of the LEDs.

52. The illuminating device of claim 50, wherein the identification of the upcoming road curvature is based at least in part on map data and wherein the adaptation of the pattern is based at least in part on the map data.

53. The illuminating device of claim 50, wherein the identification of the upcoming road curvature is based at least in part on sensor data provided by one or more of the sensors of the vehicle and wherein the adaptation of the light pattern is based at least in part on the sensor data.

54. The illuminating device of claim 48, further including one or more optical control elements to control emitted from one or more of the LEDs.

55. The illuminating device of claim 54, wherein the optical control elements include at least one of one or more reflectors, refractors or lenses.

56. An illuminating device having automatic control of light provided to an illuminated area comprising:

a structure for incorporating illuminating device elements, wherein the structure comprises a motor vehicle;

a plurality of individually controllable LEDs incorporated in the structure via at least one headlamp mounted to the structure, each headlamp including at least one of the LEDs, the LEDs in communication with a power source;

electronic circuitry apparatus for the controlled powering of the LEDs and other of the illuminating device elements;

one or more processors;

one or more sensors, including one or more cameras, place on the structure for detecting coordinate-specific information about the illuminated area and positioned to capture an image of at least one other vehicle ahead of the motor vehicle, at least one of said cameras in communication with power, and in communication with at least one of the one or more processors;

a controller, including at least one o the one or more processors, integrated with the structure via mounting, in communication with the LED controlling power electronic circuitry apparatus, said controller arranged to process the information communicated from the cameras and to automatically control the light provided to the illuminated area; and

memory storing instructions that, when executed by one or more processors of the controller, enable the controller to:

determine, based on data from one or more of the sensors, a vertical and horizontal position associated with the at least one other vehicle;

select a first cluster of the LEDs based at least in part on at least one of the vertical and horizontal position compared to known aimings of light associated with the first cluster; and

reduce intensity of illumination to non-glaring illumination of a first area associated with the at least one other vehicle, relative intensity of illumination on both sides of the first area at elevations common with the first area illuminated by a second cluster of the LEDs, by control of emission from the first cluster.

57. The illuminating device of claim 56, wherein:

the data includes image data;

the control of emission of the first cluster includes a change of at least one of color or intensity or control of at least one LED of the first cluster into a non-emitting state;

at least one of the first cluster second cluster includes a plurality of the LEDs and at least one of the first cluster or the second cluster includes non-contiguous LEDs; and

the known light aimings associated with the first cluster is based at least on art on known directionality of light emitted by LEDs of the first cluster exiting from the at least one headlamp.

58. The illuminating device of claim 56 wherein the memory further stores instructions that, when executed by one or more processors of the controller, enable the controller to:

identify an upcoming road curvature along a road on which the motor vehicle is traveling; and

accommodate the upcoming road curvature by adaptation of a light pattern of at least one of the headlamps.

59. The illuminating device of claim 58, wherein:

the control of emission of the first cluster includes a change of least one of color or intensity or control of at least one LED of the first cluster into a non-emitting state;

at least one of the first cluster or the second cluster includes a plurality of the LEDs and at least one of the first cluster or the second cluster includes non-contiguous LEDs;

the known light aiming associated with the first cluster is based at least on part on known directionality of light emitted by LEDs of the first cluster exiting from the at least one headlamp; and

the memory further stores instructions that, when executed by one or more processors of the controller, enable the controller to accommodate the road curvature by changing illumination in at least a direction of the road curvature by adaptation of the light pattern in at least one of color, intensity or spatial distribution by modification of light associated with one or more of the LEDs.

60. The illuminating device of claim 58, wherein the identification of the upcoming road curvature is based at least in part on map data and wherein the adaptation of the light pattern is based at least in part on the map data.

61. The illuminating device of claim 58, wherein the identification of the upcoming road curvature is based at least in part on sensor data provided by one or more of the sensors of the vehicle and wherein the adaptation of the light pattern is based at least in part on the sensor data.

62. The illuminating device of claim 56, further including one or more optical control elements to control light emitted from one or more of the LEDs.

63. The illuminating device of claim 62, wherein the optical control elements include at least one of one or more reflectors, refractors or lenses.

64. An illuminating device having automatic control of light provided to an illuminated area comprising:

a structure for incorporating illuminating device elements, wherein the structure comprises a motor vehicle;

a plurality of individually controllable LEDs incorporated in the structure via at least one headlamp mounted to the structure, each headlamp including at least one of the LEDs and in communication with a power source;

electronic circuitry apparatus for the controlled powering of the LEDs and other of the illuminating device elements;

one or more processors;

one or more sensors, including one or more cameras, placed on the structure for detecting coordinate-specific information about the illuminated area and positioned to capture an image of another vehicle, at least one of said cameras in communication with power, and in communication with at least one of the one or more processors;

a controller, including at least one of the one or more processors, integrated with the structure via mounting, in communication with the LED controlling power electronic circuitry apparatus, said controller arranged to process the information communicated from the cameras and to automatically control the light provided to the illuminated area; and

memory storing instructions that, when executed by one or more processors of the controller, enable the controller to:

select a first cluster of the LEDs having light associated there that is directed towards the other vehicle based at least in part on first data from one or more of the sensors indicating a first position associated with the other vehicle;

control a first change to one or more characteristics of the light associated with the first cluster of the LEDs that is directed towards the other vehicle, that diminishes glare to a driver of the other vehicle when the other vehicle is at the first position;

select a second, different cluster of the LEDs having light associated therewith that is directed towards the other vehicle based at least in part on second, subsequent data from one or more of the sensors indicating a second, subsequent position associated with the other vehicle; and

control a second, subsequent change, to one or more characteristics of the light that is subsequently directed towards the other vehicle, that diminishes glare to the driver of the other vehicle when the other vehicle is at the second position.

65. The illuminating device of claim 64, wherein:

the first data or second data includes image data;

at least one of the first or second change to characteristics of light associated with at least one of the first or second cluster of LEDs includes at least one of a change to color, to intensity, or a change of at least one LED respective cluster to a non-emitting state;

at least one of the first cluster or the second cluster includes a plurality of the LEDs and at least one of he first cluster or the second cluster includes non-contiguous LEDs; and

the light that is directed or subsequently directed towards the other vehicle is determined based at least in part on known directionality of light emitted by the respective first or second cluster exiting the at least one headlamp.

66. The illuminating device of claim 64, wherein the memory further stores instructions that, when executed by one or more processors of the controller, enable the controller to:

identify an upcoming road curvature along a road on which the motor vehicle is traveling; and

accommodate the upcoming road curvature by adaptation of a light pattern of at least one of the headlamps.

67. The illuminating device of claim 66, wherein:

at least one of the first or second change to characteristics of light associated with at least one of the first or second cluster of LEDs includes at least one of a change to color, to intensity, or a change of at least one LED of the respective duster to a non-emitting state;

at least one of the first cluster or the second cluster includes a plurality of the LEDs and at least one of the first cluster or the second cluster includes non-contiguous LEDs;

the light that is directed or subsequently directed towards the other vehicle is determined based at least in part on known directionality of light emitted by the respective first or second cluster exiting the at least one headlamp; and

the memory further stores instructions that, when executed one or more processors of the controller, enable the controller to accommodate the road curvature by changing illumination in at least a direction of the road curvature by adaptation of the light pattern in at least one of color, intensity or spatial distribution by modification of light associated with one or more of the LEDs.

68. The illuminating device of claim 66, wherein the identification of the upcoming road curvature is based at least in part on map data and wherein the adaptation of the light pattern is based at least in part on the map data.

69. The illuminating device of claim 66, wherein the identification of the upcoming road curvature is based at least in part on sensor data provided by one or more of the sensors of the vehicle and wherein the adaptation of the light pattern is based at least in part on the sensor data.

70. The illuminating device of claim 64, further including one or more optical control elements to control light emitted from one or more of the LEDs.

71. The illuminating device of claim 70, wherein the optical control elements include at least one of one or more reflectors, refractors or lenses.

72. An illuminating device having automatic control of the light provided to an illuminated area comprising:

a structure for incorporating illuminating device elements, wherein the structure comprises a motor vehicle;

a plurality of individually controllable LEDs incorporated in the structure via at least one headlamp mounted to the structure, each headlamp including at least one of the LEDs, the LEDs in communication with a power source;

electronic circuitry apparatus for the controlled powering of the LEDs and other elements of the illuminating device elements;

one or more processors;

one or more sensors, including one or more cameras, placed on the structure for detecting coordinate-specific information about the illuminated area, at least one of said cameras in communication with power, and in communication with at least one of the one or more processors;

a controller, including at least one of the one or more processors, integrated with the structure via mounting, in communication with the LED controlling power electronic circuitry apparatus, said controller arranged to process the information communicated from the cameras and to automatically control the light provided to the illuminated area; and

memory storing instructions that, when executed by one or more processors of the controller, enable the controller to:

determine a target based on first data from one or more of the sensors;

determine a first target location based on the first data;

select a cluster of the LEDs having light associated therewith that is directed at the target, determined based on the first target location;

vary illumination provided to the target by the selected cluster relative to illumination provided to areas laterally adjacent to the target and provided by at least one LED different from LEDs in the selected cluster; and

maintain a variance of illumination provided to the target relative to the laterally adjacent areas, when subsequent data from one or more of the cameras indicates a change in position of the target relative to the motor vehicle, by repeating the determination of target location, selection of the cluster and variance to illumination provided to the target, relative to the laterally adjacent areas, based on the subsequent data.

73. The illuminating device of claim. 72, wherein:

the variation of illumination provided to the target includes variation in at least one of color or intensity at least a change of at least one LED of the selected cluster to a non-emitting state;

the cluster includes a plurality of the LEDs and the cluster includes non-contiguous LEDs;

the light directed at the target is determined based at least in part on known directionality of light emitted by the first cluster exiting from the at least one headlamp; and

at least one of the first data or the subsequent data includes image data.

74. The illuminating device of claim 72, wherein the memory further stores instructions that, when executed by one or more processors of the controller, enable the controller to:

identity an upcoming road curvature along a road on which the motor vehicle is traveling; and

accommodated the upcoming road curvature by adaptation of a light pattern of at least one of the headlamps.

75. The illuminating device of claim 74, wherein:

the variation of illumination provided to the target includes variation in at least one of color or intensity or at least a change of at least one LED of the selected cluster to a non-emitting state

the selected cluster includes a plurality of the LEDs and the selected cluster includes non-contiguous LEDs;

the light directed at the target is determined based at least in part on known directionality of light emitted by the first cluster exiting from the at least one headlamp; and

the memory further stores instructions that, when executed by one or more processors of the controller, enable the controller to accommodate road curvature by changing illumination in at least a direction of the road curvature by adaptation of the light pattern in at least one of color, intensity or spatial distribution by modification of light associated with one or more of the LEDs.

76. The illuminating device of claim 74, wherein the identification of the upcoming road curvature is based at least in part on map data and wherein the adaptation of the light pattern is based at least in part on the map data.

77. The illuminating device of claim 74, wherein the identification of the upcoming road curvature is based at least in part on sensor data provided by one or more of the sensors of the vehicle and wherein the adaptation of the light pattern is based at least in part on the sensor data.

78. The illuminating device of claim 72, further including one or more optical control elements to control light emitted from one or more of the LEDs.

79. The illuminating device of claim 78 wherein the optical control elements include at least one of one or more reflectors, refractors or lenses.

80. An illuminating device having automatic control of light provided to an illuminated area comprising:

a structure for incorporating illuminating device elements, wherein the structure comprises a motor vehicle;

a plurality of individually controllable LEDs incorporated in the structure via at least one headlamp mounted to the structure, each headlamp including at least one of the LEDs, the LEDs in communication with a power source;

electronic circuitry apparatus for the controlled powering of the LEDs and other of the illuminating device elements;

one or more processors;

one or more sensors, including one or more cameras, place on the structure or detecting coordinate-specific information about the illuminated area and positioned to capture camera data indicating a target ahead of the motor vehicle, at least one of said cameras in communication with power, and in communication with at least one of the one or more processors;

a controller, including at least one of the one or more processors, integrated with the structure via mounting, in communication with the LED controlling power electronic circuitry apparatus, said controller arranged to process the information communicated from the cameras and to automatically control the light provided to the illuminated area; and

memory storing instructions that, when executed by one or more processors of the controller, enable the controller to:

identify, based on data received from one or more of the sensors, a plurality of positions associated with the target as the target move relative to the motor vehicle; and

change, responsive to the positions associated with the target, first light associated with one or more LEDs aimed toward at least a portion of the target, relative to second light associated with other one or more of the LEDs aimed laterally adjacent the target on either side, as the target moves relative to the motor vehicle.

81. The illuminating device of claim 80, wherein:

the data includes image data;

the memory further stores instructions that, when executed by one or more processors of the controller, enable the controller to select a first cluster of LEDs, associated with the first light, for the change, based at least in part on known aimings of the first light associated with the first cluster having a correlation to the at least the portion, the known aimings based at least in part on at least one of known directionality of light emitted by the first cluster or known directionality of light emitted by the first cluster exiting the headlamp; and

the change to emission of one or more LEDs aimed to towards the at least the portion includes a change to intensity or color or a chance of a least one of the LEDs to a non-emitting state.

82. The illuminating device of claim 80, wherein the memory further stores instructions that, when executed by one or more processors of the controller, enable the controller to:

identify an upcoming road curvature along a road on which the motor vehicle is traveling; and

accommodate the upcoming road curvature by adaptation of a light pattern of least one of the at least one headlamps.

83. The illuminating device of claim 82, wherein:

the change to emission of the one or more LEDs aimed towards the at least the portion includes a change to intensity or color or a change of at least one of the LEDs to a non-emitting state;

the memory further stores instructions that, when executed by one or more processors of the controller, enable the controller to select a first cluster of LEDs, associated with the first light, for the change, based at least in part on known aimings of the first light associated with the first cluster having a correlation to the at least the portion, the known aimings based at least in part on at least one of known directionality of light emitted by the first cluster or known directionality of light emitted by the first cluster exiting the headlamp; and

the memory further stores instructions that, when executed by one or more processors of the controller, enable the controller to accommodate the road curvature by changing illumination in at least a direction of the road curvature by adaptation of the light pattern in at least one of color, intensity or spatial distribution by modification of light associated with one or more of the LEDs.

84. The illuminating device or claim 82, wherein the identification of the upcoming road curvature is based at least in part on map data and wherein the adaptation of the light pattern is based at least in part on the map data.

85. The illuminating device of claim 82, wherein the identification of the upcoming road curvature is based at least in part on sensor data provided by one or more of the sensors of the vehicle and wherein the adaptation of the light pattern is based at least in part on the sensor data.

86. The illuminating device of claim 80, further including one or more optical control elements to control light emitted from one or more of the LEDs.

87. The illuminating device of claim 86, wherein the optical control elements include at least one of one or more reflectors, refractors or lenses.

* * * * *

IN THE UNITED STATES PATENT AND TRADEMARK OFFICE

In re application of:

YECHEZKAL EVAN SPERO

Group Art Unit: 3992

Examiner: TRAN, HENRY N.

Serial No.: 90/014,815

Filed: July 30, 2021

For: DETECTOR CONTROLLED ILLUMINATING SYSTEM

Attorney Docket No.: TRCH0102RX

REQUEST FOR CERTIFICATE OF CORRECTION

Attention Certificate of Correction Branch
Commissioner for Patents
U.S. Patent & Trademark Office
P.O. Box 1450
Alexandria, VA 22313-1450

Commissioner:

It is requested that a Certificate of Correction be issued for the above-identified patent under the provisions of 37 C.F.R. § 1.322. The corrections noted are as follows:

Column 1, Line 36, Claim 24:
(Page 1, Line 11, Claim 24: Exhibit OTH-C, New Claims dated July 30, 2021):

After "placed on"
Delete "die" and
Insert – the --.

Column 1, Line 43, Claim 24:
(Page 1, Line 16, Claim 24: Exhibit OTH-C, New Claims dated July 30, 2021):

After "in communication with the"
Insert – LED --.

Column 1, Lines 54-55, Claim 24:
(Page 1, Line 23, Claim 24: Exhibit OTH-C, New Claims dated July 30, 2021):

After "that emit light toward at"
Insert – least a--.

Column 1, Lines 65-66, Claim 25:
(Page 2, Line 2, Claim 25: Exhibit OTH-C, New Claims dated July 30, 2021):

After "to at least one of intensity"
Delete "Or" and
Insert – or --.

Column 2, Lines 1-2, Claim 25:
(Page 2, Line 4, Claim 25: Exhibit OTH-C, New Claims dated July 30, 2021):

After "plurality of the LEDs and the cluster"
Insert – includes --.

Column 2, Line 4, Claim 26:
(Page 2, Lines 1-2, Claim 26: Exhibit OTH-C, New Claims dated July 30, 2021):

After "memory further stores instructions"
Delete "that" and
Insert – that, -- (comma).

Column 2, Line 17, Claim 27:
(Page 2, Line 4, Claim 27: Exhibit OTH-C, New Claims dated July 30, 2021):

After "the cluster includes a plurality of the"
Delete "LEDS" and
Insert – LEDs --.

Column 2, Lines 19-20, Claim 27:
(Page 2, Line 6, Claim 27: Exhibit OTH-C, New Claims dated July 30, 2021):

After "that, when executed"
Insert – by --.

Column 2, Line 27, Claim 28:
(Page 2, Line 1, Claim 28: Exhibit OTH-C, New Claims dated July 30, 2021):

After "The illuminating device "
Insert – of --.

Column 2, Line 27, Claim 28:
(Page 2, Line 1, Claim 28: Exhibit OTH-C, New Claims dated July 30, 2021):

After "claim 26, wherein"
Insert – the --.

Column 2, Line 47, Claim 32:
(Page 3, Line 5, Claim 32: Exhibit OTH-C, New Claims dated July 30, 2021):

Before "plurality of individually controllable LEDs"
Insert – a --.

Column 2, Line 52, Claim 32:
(Page 3, Line 8, Claim 32: Exhibit OTH-C, New Claims dated July 30, 2021):

After "electronic circuitry apparatus for"
Delete "t" and
Insert – the --.

Column 3, Line 37, Claim 33:
(Page 4, Line 11, Claim 33: Exhibit OTH-C, New Claims dated July 30, 2021):

After "and the cluster includes non-contiguous"
Delete "LEDS" and
Insert – LEDs --.

Column 3, Line 47, Claim 35:
(Page 5, Line 1, Claim 35: Exhibit OTH-C, New Claims dated July 30, 2021):

After "The illuminating device of claim"
Delete "14" and
Insert – 34 --.

Column 4, Line 5, Claim 36:
(Page 5, Line 1, Claim 36: Exhibit OTH-C, New Claims dated July 30, 2021):

After "The illuminating device of claim"
Delete "34" and
Insert – 34, -- (comma).

Column 4, Line 28, Claim 40:
(Page 6, Lines 6-7, Claim 40: Exhibit OTH-C, New Claims dated July 30, 2021):

After "the LEDs in communication"
Insert – with --.

Column 4, Line 51, Claim 40:
(Page 6, Line 21, Claim 40: Exhibit OTH-C, New Claims dated July 30, 2021):

After "determine a"
Delete "list" and
Insert – first --.

Column 5, Line 10, Claim 41:
(Page 7, Line 4, Claim 41: Exhibit OTH-C, New Claims dated July 30, 2021):

After "includes at least one of a"
Delete "chance" and
Insert – change --.

Column 5, Lines 26-27, Claim 41:
(Page 7, Line 13, Claim 41: Exhibit OTH-C, New Claims dated July 30, 2021):

After "at least in part on known aimings"
Insert – of --.

Column 5, Lines 43-44, Claim 43:
(Page 8, Line 2, Claim 43: Exhibit OTH-C, New Claims dated July 30, 2021):

After "at least one of the first or second change to characteristics of"
Delete "the associate" and
Insert – light associated --.

Column 5, Line 46, Claim 43:
(Page 8, Line 4, Claim 43: Exhibit OTH-C, New Claims dated July 30, 2021):

After "to intensity, or a change of at"
Insert – least --.

Column 5, Line 48, Claim 43:
(Page 8, Line 5, Claim 43: Exhibit OTH-C, New Claims dated July 30, 2021):

After "at least one of the"
Insert – first --.

Column 5, Lines 52-53, Claim 43:
(Page 8, Line 7, Claim 43: Exhibit OTH-C, New Claims dated July 30, 2021):

After "the determination of the first cluster includes selection of"
Delete "title" and
Insert – the --.

Column 6, Line 7, Claim 43:
(Page 8, Line 19, Claim 43: Exhibit OTH-C, New Claims dated July 30, 2021):

After "modification of"
Insert – light --.

Column 6, Line 19, Claim 46:
(Page 8, Lines 1-2, Claim 46: Exhibit OTH-C, New Claims dated July 30, 2021):

After "one or more optical control"
Delete "element" and
Insert – elements --.

Column 6, Line 44, Claim 48:
(Page 9, Line 14, Claim 48: Exhibit OTH-C, New Claims dated July 30, 2021):

After "a controller, including at least one"
Delete "o" and
Insert – of --.

Column 8, Lines 28-29, Claim 56:
(Page 12, Line 11, Claim 56: Exhibit OTH-C, New Claims dated July 30, 2021):

After "including one or more cameras,"
Delete "place" and
Insert – placed --.

Column 8, Line 35, Claim 56:
(Page 12, Line 15, Claim 56: Exhibit OTH-C, New Claims dated July 30, 2021):

After "a controller, including at least one"
Delete "o" and
Insert – of --.

Column 8, Lines 53-54, Claim 56:
(Page 12, Line 27, Claim 56: Exhibit OTH-C, New Claims dated July 30, 2021):

After "with the at least one other vehicle, relative"
Insert – to --.

Column 8, Line 64, Claim 57:
(Page 13, Line 5, Claim 57: Exhibit OTH-C, New Claims dated July 30, 2021):

After "at least one of the first cluster "
Insert – or the --.

Column 9, Line 2, Claim 57:
(Page 13, Line 7, Claim 57: Exhibit OTH-C, New Claims dated July 30, 2021):

After "based at least on "
Delete "art" and
Insert – part --.

Column 9, Line 23, Claim 59:
(Page 13, Line 6, Claim 59: Exhibit OTH-C, New Claims dated July 30, 2021):

After "the known light"
Delete "aiming" and
Insert – aimings --.

Column 10, Lines 14-15, Claim 64:
(Page 15, Line 7, Claim 64: Exhibit OTH-C, New Claims dated July 30, 2021):

After "having light associated"
Delete "there" and
Insert – therewith --.

Column 10, Lines 40-41, Claim 65:
(Page 15, Line 5, Claim 65: Exhibit OTH-C, New Claims dated July 30, 2021):

After "change of at least one LED"
Insert – of the --.

Column 10, Line 43, Claim 65:
(Page 15, Lines 6-7, Claim 65: Exhibit OTH-C, New Claims dated July 30, 2021):

After "and at least one of"
Delete "he" and
Insert –the --.

Column 10, Lines 62-63, Claim 67:
(Page 16, Line 4, Claim 67: Exhibit OTH-C, New Claims dated July 30, 2021):

After "or a change of at least one LED of the respective"
Delete "duster" and
Insert – cluster --.

Column 11, Lines 6-7, Claim 67:
(Page 16, Line 10, Claim 67: Exhibit OTH-C, New Claims dated July 30, 2021):

After "the memory further stores instructions that, when executed"
Insert – by --.

Column 12, Lines 15-16, Claim 73:
(Page 18, Lines 2-3, Claim 73: Exhibit OTH-C, New Claims dated July 30, 2021):

After "in at least one of color or intensity"
Insert – or --.

Column 12, Lines 27-29, Claim 74:
(Page 18, Lines 2-2, Claim 74: Exhibit OTH-C, New Claims dated July 30, 2021):

After "by the one or more processors of the controller, enable the controller to:"
Delete "identity" and
Insert – identify --.

Column 12, Lines 30-31, Claim 74:
(Page 18, Lines 3-5, Claim 74: Exhibit OTH-C, New Claims dated July 30, 2021):

After "a road on which the motor vehicle is traveling; and"
Delete "accommodated" and
Insert – accommodate --.

Column 12, Line 37, Claim 75:
(Page 18, Line 3, Claim 75: Exhibit OTH-C, New Claims dated July 30, 2021):

After "cluster to a non-emitting"
Delete "state" and
Insert – state; --.

Column 13, Lines 13-14, Claim 80:
(Page 20, Line 2, Claim 80: Exhibit OTH-C, New Claims dated July 30, 2021):

After "one or more sensors, including one or more cameras,"
Delete "place" and
Insert – placed --.

Column 13, Line 14, Claim 80:
(Page 20, Line 2, Claim 80: Exhibit OTH-C, New Claims dated July 30, 2021):

After "on the structure"
Delete "or" and
Insert – for --.

Column 13, Line 31-32 Claim 80:
(Page 20, Line 13, Claim 80: Exhibit OTH-C, New Claims dated July 30, 2021):

After "associated with the target as the target"
Delete "move" and
Insert – moves --.

Column 14, Lines 2-3, Claim 81:
(Page 20, Line 10, Claim 81: Exhibit OTH-C, New Claims dated July 30, 2021):

After "a change to intensity or color or a"
Delete "chance" and
Insert – change --.

Column 14, Line 38, Claim 84:
(Page 21, Line 1, Claim 84: Exhibit OTH-C, New Claims dated July 30, 2021):

After "The illuminating device"
Delete "or" and
Insert – of --.

It is requested that a Certificate of Correction be issued for the above-identified patent under the provisions of 37 C.F.R. § 1.323. The corrections noted are as follows:

Column 6, Lines 47-48, Claim 48:
(Page 9, Lines 15-16, Claim 48: Exhibit OTH-C, New Claims dated July 30, 2021):

After "said controller arranged to process the"
Delete "information," and
Insert – information --.

Column 7, Lines 25-26, Claim 49:
(Page 10, Line 13, Claim 49: Exhibit OTH-C, New Claims dated July 30, 2021):

After "associated with the first cluster is"
Delete "at east on" and
Insert – based at least in --.

Column 7, Lines 54-55, Claim 51:
(Page 11, Line 12, Claim 51: Exhibit OTH-C, New Claims dated July 30, 2021):

After "associated with the first cluster is based at least"
Delete "on" and
Insert – in--.

Column 9, Line 2, Claim 57:
(Page 13, Line 7, Claim 57: Exhibit OTH-C, New Claims dated July 30, 2021):

After "based at least"
Delete "on art" and
Insert – in part --.

Column 9, Lines 23-24, Claim 59:
(Page 13, Line 6, Claim 59: Exhibit OTH-C, New Claims dated July 30, 2021):

After "with the first cluster is based at least"
Delete "on" and
Insert – in --.

Applicant requests a Certificate of Correction under 37 C.F.R. § 1.323 to correct errors of minor character. The corrections do not involve changes which introduce new matter or require re-examination. The applicable fee of $160 pursuant to 37 C.F.R. § 1.20(a) is being charged to our Deposit Account No. 02-3978 via electronic authorization submitted concurrently herewith. The Commissioner is hereby authorized to charge any additional fees to our Deposit Account No. 02-3978.

Filed herewith is the form for Certificate of Correction (PTO/SB/44). The Commissioner is hereby authorized to charge any additional fees to our Deposit Account No. 02-3978.

Respectfully submitted,

YECHEZKAL EVAN SPERO

By: /Sangeeta G. Shah/
Sangeeta G. Shah
Reg. No. 38,614
Attorney/Agent for Applicant

Date: September 12, 2022

BROOKS KUSHMAN P.C.
1000 Town Center, 22nd Floor
Southfield, MI 48075-1238
Phone: 248-358-4400
Fax: 248-358-3351

UNITED STATES PATENT AND TRADEMARK OFFICE

CERTIFICATE OF CORRECTION

PATENT NO.:
APPLICATION NO.: 90/014815
ISSUE DATE:
INVENTOR(S): YECHEZKAL EVAN SPERO (et al.)

It is certified that an error appears or errors appear in the above-identified patent and that said Letters Patent is hereby corrected as shown below:

Column 1, Line 36, Claim 24:

After "placed on"
Delete "die" and
Insert – the --.

Column 1, Line 43, Claim 24:

After "in communication with the"
Insert – LED --.

Column 1, Lines 54-55, Claim 24:

After "that emit light toward at"
Insert – least a--.

Column 1, Lines 65-66, Claim 25:

After "to at least one of intensity"
Delete "Or" and
Insert – or --.

Column 2, Lines 1-2, Claim 25:

After "plurality of the LEDs and the cluster"
Insert – includes --.

MAILING ADDRESS OF SENDER (Please do not use customer number below):

BROOKS KUSHMAN P.C.
1000 Town Center, 22nd Floor
Southfield, MI 48075-1238

Column 2, Line 4, Claim 26:

After “memory further stores instructions”
Delete “that” and
Insert – that, -- (comma).

Column 2, Line 17, Claim 27:

After “the cluster includes a plurality of the”
Delete “LEDS” and
Insert – LEDs --.

Column 2, Lines 19-20, Claim 27:

After “that, when executed”
Insert – by --.

Column 2, Line 27, Claim 28:

After “The illuminating device ”
Insert – of --.

Column 2, Line 27, Claim 28:

After “claim 26, wherein”
Insert – the --.

Column 2, Line 47, Claim 32:

Before “plurality of individually controllable LEDs”
Insert – a --.

Column 2, Line 52, Claim 32:

After “electronic circuitry apparatus for”
Delete “t” and
Insert – the --.

MAILING ADDRESS OF SENDER (Please do not use customer number below):

BROOKS KUSHMAN P.C.
1000 Town Center, 22nd Floor
Southfield, MI 48075-1238

Column 3, Line 37, Claim 33:

After "and the cluster includes non-contiguous"
Delete "LEDS" and
Insert – LEDs --.

Column 3, Line 47, Claim 35:

After "The illuminating device of claim"
Delete "14" and
Insert – 34 --.

Column 4, Line 5, Claim 36:

After "The illuminating device of claim"
Delete "34" and
Insert – 34, -- (comma).

Column 4, Line 28, Claim 40:

After "the LEDs in communication"
Insert – with --.

Column 4, Line 51, Claim 40:

After "determine a"
Delete "list" and
Insert – first --.

Column 5, Line 10, Claim 41:

After "includes at least one of a"
Delete "chance" and
Insert – change --.

Column 5, Lines 26-27, Claim 41:

After "at least in part on known aimings"
Insert – of --.

MAILING ADDRESS OF SENDER (Please do not use customer number below):

BROOKS KUSHMAN P.C.
1000 Town Center, 22nd Floor
Southfield, MI 48075-1238

Column 5, Lines 43-44, Claim 43:

After "at least one of the first or second change to characteristics of"
Delete "the associate" and
Insert – light associated --.

Column 5, Line 46, Claim 43:

After "to intensity, or a change of at"
Insert – least --.

Column 5, Line 48, Claim 43:

After "at least one of the"
Insert – first --.

Column 5, Lines 52-53, Claim 43:

After "the determination of the first cluster includes selection of"
Delete "title" and
Insert – the --.

Column 6, Line 7, Claim 43:

After "modification of"
Insert – light --.

Column 6, Line 19, Claim 46:

After "one or more optical control"
Delete "element" and
Insert – elements --.

MAILING ADDRESS OF SENDER (Please do not use customer number below):

BROOKS KUSHMAN P.C.
1000 Town Center, 22nd Floor
Southfield, MI 48075-1238

Column 6, Line 44, Claim 48:

After “a controller, including at least one”
Delete “o” and
Insert – of --.

Column 6, Lines 47-48, Claim 48:

After “said controller arranged to process the”
Delete “information,” and
Insert – information --.

Column 7, Lines 25-26, Claim 49:

After “associated with the first cluster is”
Delete “at east on” and
Insert – based at least in --.

Column 7, Lines 54-55, Claim 51:

After “associated with the first cluster is based at least”
Delete “on” and
Insert – in--.

Column 8, Lines 28-29, Claim 56:

After “including one or more cameras,”
Delete “place” and
Insert – placed --.

Column 8, Line 35, Claim 56:

After “a controller, including at least one”
Delete “o” and
Insert – of --.

MAILING ADDRESS OF SENDER (Please do not use customer number below):

BROOKS KUSHMAN P.C.
1000 Town Center, 22nd Floor
Southfield, MI 48075-1238

Column 8, Lines 53-54, Claim 56:

After "with the at least one other vehicle, relative"
Insert – to --.

Column 8, Line 64, Claim 57:

After "at least one of the first cluster "
Insert – or the --.

Column 9, Line 2, Claim 57:

After "based at least on "
Delete "art" and
Insert – part --.

Column 9, Line 23, Claim 59:

After "the known light"
Delete "aiming" and
Insert – aimings --.

Column 9, Lines 23-24, Claim 59:

After "with the first cluster is based at least"
Delete "on" and
Insert – in --.

Column 10, Lines 14-15, Claim 64:

After "having light associated"
Delete "there" and
Insert – therewith --.

Column 10, Lines 40-41, Claim 65:

After "change of at least one LED"
Insert – of the --.

MAILING ADDRESS OF SENDER (Please do not use customer number below):

BROOKS KUSHMAN P.C.
1000 Town Center, 22nd Floor
Southfield, MI 48075-1238

Column 10, Line 43, Claim 65:

After “and at least one of”
Delete “he” and
Insert –the --.

Column 10, Lines 62-63, Claim 67:

After “or a change of at least one LED of the respective”
Delete “duster” and
Insert – cluster --.

Column 11, Lines 6-7, Claim 67:

After “the memory further stores instructions that, when executed”
Insert – by --.

Column 12, Lines 15-16, Claim 73:

After “in at least one of color or intensity”
Insert – or --.

Column 12, Lines 27-29, Claim 74:

After “by the one or more processors of the controller, enable the controller to:”
Delete “identity” and
Insert – identify --.

Column 12, Lines 30-31, Claim 74:

After “a road on which the motor vehicle is traveling; and”
Delete “accommodated” and
Insert – accommodate --.

MAILING ADDRESS OF SENDER (Please do not use customer number below):

BROOKS KUSHMAN P.C.
1000 Town Center, 22nd Floor
Southfield, MI 48075-1238

Column 12, Line 37, Claim 75:

After “cluster to a non-emitting”
Delete “state” and
Insert – state; --.

Column 13, Lines 13-14, Claim 80:

After “one or more sensors, including one or more cameras,”
Delete “place” and
Insert – placed --.

Column 13, Line 14, Claim 80:

After “on the structure”
Delete “or” and
Insert – for --.

Column 13, Line 31-32 Claim 80:

After “associated with the target as the target”
Delete “move” and
Insert – moves --.

Column 14, Lines 2-3, Claim 81:

After “a change to intensity or color or a”
Delete “chance” and
Insert – change --.

Column 14, Line 38, Claim 84:

After “The illuminating device”
Delete “or” and
Insert – of --.

MAILING ADDRESS OF SENDER (Please do not use customer number below):

BROOKS KUSHMAN P.C.
1000 Town Center, 22nd Floor
Southfield, MI 48075-1238

SPERO EX. 2023

Electronic Acknowledgement Receipt

EFS ID:	46602165
Application Number:	90014815
International Application Number:	
Confirmation Number:	6654
Title of Invention:	Detector Controlled Illuminating System
First Named Inventor/Applicant Name:	9955551B2
Customer Number:	22045
Filer:	Sangeeta G Shah/Fiona Archer
Filer Authorized By:	Sangeeta G Shah
Attorney Docket Number:	TRCH0102RX
Receipt Date:	13-SEP-2022
Filing Date:	30-JUL-2021
Time Stamp:	11:04:00
Application Type:	Reexam (Patent Owner)

Payment information:

Submitted with Payment	no

File Listing:

Document Number	Document Description	File Name	File Size(Bytes)/ Message Digest	Multi Part /.zip	Pages (if appl.)
1	Request for Certificate of Correction	TRCH0102RX_Request_for_Certificate_of_Correction.PDF	180256 4fd833b2611754409621 4dde6316b40a52d190f8	no	11

Warnings:

SPERO EX. 2023

Information:					
2	Request for Certificate of Correction	TRCH0102RX_Certificate_of_Correction.PDF	198597 8afe780d29c6a923d3d539458ca8dae0726de680	no	8
Warnings:					
Information:					
			Total Files Size (in bytes):	378853	

This Acknowledgement Receipt evidences receipt on the noted date by the USPTO of the indicated documents, characterized by the applicant, and including page counts, where applicable. It serves as evidence of receipt similar to a Post Card, as described in MPEP 503.

New Applications Under 35 U.S.C. 111
If a new application is being filed and the application includes the necessary components for a filing date (see 37 CFR 1.53(b)-(d) and MPEP 506), a Filing Receipt (37 CFR 1.54) will be issued in due course and the date shown on this Acknowledgement Receipt will establish the filing date of the application.
National Stage of an International Application under 35 U.S.C. 371
If a timely submission to enter the national stage of an international application is compliant with the conditions of 35 U.S.C. 371 and other applicable requirements a Form PCT/DO/EO/903 indicating acceptance of the application as a national stage submission under 35 U.S.C. 371 will be issued in addition to the Filing Receipt, in due course.
New International Application Filed with the USPTO as a Receiving Office
If a new international application is being filed and the international application includes the necessary components for an international filing date (see PCT Article 11 and MPEP 1810), a Notification of the International Application Number and of the International Filing Date (Form PCT/RO/105) will be issued in due course, subject to prescriptions concerning national security, and the date shown on this Acknowledgement Receipt will establish the international filing date of the application.

UNITED STATES PATENT AND TRADEMARK OFFICE

UNITED STATES DEPARTMENT OF COMMERCE
United States Patent and Trademark Office
Address: COMMISSIONER FOR PATENTS
P.O. Box 1450
Alexandria, Virginia 22313-1450
www.uspto.gov

APPLICATION NO.	FILING DATE	FIRST NAMED INVENTOR	ATTORNEY DOCKET NO.	CONFIRMATION NO.
90/014,815	07/30/2021	9955551B2	TRCH0102RX	6654

22045 7590 12/12/2022
Brooks Kushman
1000 Town Center
22nd Floor
Southfield, MI 48075

EXAMINER
TRAN, HENRY N

ART UNIT	PAPER NUMBER
3992	

MAIL DATE	DELIVERY MODE
12/12/2022	PAPER

Please find below and/or attached an Office communication concerning this application or proceeding.

The time period for reply, if any, is set in the attached communication.

UNITED STATES PATENT AND TRADEMARK OFFICE

Commissioner for Patents
United States Patent and Trademark Office
P.O. Box 1450
Alexandria, VA 22313-1450
www.uspto.gov

Patent No.: 9,955,551
Issue Date: 08/19/2022
Appl. No.: 90/014,815
Filed: 07/30/2021

PART (A) RESPONSE FOR CERTIFICATES OF CORRECTION

This is a decision on the Certificate of Correction request filed 13 September 2022.

The request for issuance of Certificate of Correction for the above-identified correction(s) under the provisions of 37 CFR 1.322 and/or 1.323 is hereby:

(Check one)
☑ Approved ☐ Approved in Part ☐ Denied

Comments: ____

PART (B) PETITION UNDER 37 CFR 1.324 OR 37 CFR 1.48

☐ This is a decision on the petition filed ____ to correct inventorship under 37 CFR 1.324.

☐ This is a decision on the request under 37 CFR 1.48, petition filed ____. In view of the fact that the patent has already issued, the request under 37 CFR 1.48 has been treated as a petition to correct inventorship under 37 CFR 1.324.

The petition is hereby: ☐ Granted ☐ Dismissed

Comment: ____

The patented filed is being forwarded to Certificate of Corrections Branch for issuance of a certificate naming only the actual inventor or inventors.

/ANDREW J. FISCHER/
Supervisory Patent Reexamination Specialist, Art Unit 3992
Technology Center 3900
Phone: (571)272-6779

Certificates of Correction Branch email: CustomerServiceCoC@uspto.gov CoC Central Phone Number: (703) 756-1814

UNITED STATES PATENT AND TRADEMARK OFFICE

CERTIFICATE OF CORRECTION

PATENT NO. : 9,955,551 C1
APPLICATION NO. : 90/014815
DATED : August 19, 2022
INVENTOR(S) : Yechezkal Evan Spero

It is certified that error appears in the above-identified patent and that said Letters Patent is hereby corrected as shown below:

In the Claims

Column 1, Line 36, Claim 24:
After "placed on"
Delete "die" and
Insert -- the --.

Column 1, Line 43, Claim 24:
After "in communication with the"
Insert -- LED --.

Column 1, Lines 54-55, Claim 24:
After "that emit light toward at"
Insert -- least a --.

Column 1, Lines 65-66, Claim 25:
After "to at least one of intensity"
Delete "Or" and
Insert -- or --.

Column 2, Lines 1-2, Claim 25:
After "plurality of the LEDs and the cluster"
Insert -- includes --.

Column 2, Line 4, Claim 26:
After "memory further stores instructions"
Delete "that" and
Insert -- that, --.

Signed and Sealed this
Tenth Day of January, 2023

Katherine Kelly Vidal

Katherine Kelly Vidal
Director of the United States Patent and Trademark Office

Column 2, Line 17, Claim 27:
After "the cluster includes a plurality of the"
Delete "LEDS" and
Insert -- LEDs --.

Column 2, Lines 19-20, Claim 27:
After "that, when executed"
Insert -- by --.

Column 2, Line 27, Claim 28:
After "The illuminating device"
Insert -- of --.

Column 2, Line 27, Claim 28:
After "claim 26, wherein"
Insert -- the --.

Column 2, Line 47, Claim 32:
Before "plurality of individually controllable LEDs"
Insert -- a --.

Column 2, Line 52, Claim 32:
After "electronic circuitry apparatus for"
Delete "t" and
Insert -- the --.

Column 3, Line 37, Claim 33:
After "and the cluster includes non-contiguous"
Delete "LEDS" and
Insert -- LEDs --.

Column 3, Line 47, Claim 35:
After "The illuminating device of claim"
Delete "14" and
Insert -- 34 --.

Column 4, Line 5, Claim 36:
After "The illuminating device of claim"
Delete "34" and
Insert -- 34, --.

Column 4, Line 28, Claim 40:
After "the LEDs in communication"
Insert -- with --.

Column 4, Line 51, Claim 40:
After “determine a”
Delete “list” and
Insert -- first --.

Column 5, Line 10, Claim 41:
After “includes at least one of a”
Delete “chance” and
Insert -- change --.

Column 5, Lines 26-27, Claim 41:
After “at least in part on known aimings”
Insert -- of --.

Column 5, Lines 43-44, Claim 43:
After “at least one of the first or second change to characteristics of”
Delete “the associate” and
Insert -- light associated --.

Column 5, Line 46, Claim 43:
After “to intensity, or a change of at”
Insert -- least --.

Column 5, Line 48, Claim 43:
After “at least one of the”
Insert -- first --.

Column 5, Lines 52-53, Claim 43:
After “the determination of the first cluster includes selection of”
Delete “title” and
Insert -- the --.

Column 6, Line 7, Claim 43:
After “modification of”
Insert -- light --.

Column 6, Line 19, Claim 46:
After “one or more optical control”
Delete “element” and
Insert -- elements --.

Column 6, Line 44, Claim 48:
After “a controller, including at least one”
Delete “o” and
Insert -- of --.

Column 6, Lines 47-48, Claim 48:
After "said controller arranged to process the"
Delete "information," and
Insert -- information --.

Column 7, Lines 25-26, Claim 49:
After "associated with the first cluster is"
Delete "at east on" and
Insert -- based at least in --.

Column 7, Lines 54-55, Claim 51:
After "associated with the first cluster is based at least"
Delete "on" and
Insert -- in --.

Column 8, Lines 28-29, Claim 56:
After "including one or more cameras,"
Delete "place" and
Insert -- placed --.

Column 8, Line 35, Claim 56:
After "a controller, including at least one"
Delete "o" and
Insert -- of --.

Column 8, Lines 53-54, Claim 56:
After "with the at least one other vehicle, relative"
Insert -- to --.

Column 8, Line 64, Claim 57:
After "at least one of the first cluster"
Insert -- or the --.

Column 9, Line 2, Claim 57:
After "based at least on"
Delete "art" and
Insert -- part --.

Column 9, Line 23, Claim 59:
After "the known light"
Delete "aiming" and
Insert -- aimings --.

Column 9, Lines 23-24, Claim 59:
After "with the first cluster is based at least"

Delete “on” and
Insert -- in --.

Column 10, Lines 14-15, Claim 64:
After “having light associated”
Delete “there” and
Insert -- therewith --.

Column 10, Lines 40-41, Claim 65:
After “change of at least one LED”
Insert -- of the --.

Column 10, Line 43, Claim 65:
After “and at least one of”
Delete “he” and
Insert -- the --.

Column 10, Lines 62-63, Claim 67:
After “or a change of at least one LED of the respective”
Delete “duster” and
Insert -- cluster --.

Column 11, Lines 6-7, Claim 67:
After “the memory further stores instructions that, when executed”
Insert -- by --.

Column 12, Lines 15-16, Claim 73:
After “in at least one of color or intensity”
Insert -- or --.

Column 12, Lines 27-29, Claim 74:
After “by the one or more processors of the controller, enable the controller to:”
Delete “identity” and
Insert -- identify --.

Column 12, Lines 30-31, Claim 74:
After “a road on which the motor vehicle is traveling; and”
Delete “accommodated” and
Insert -- accommodate --.

Column 12, Line 37, Claim 75:
After “cluster to a non-emitting”
Delete “state” and
Insert -- state; --.

Column 13, Lines 13-14, Claim 80:
After "one or more sensors, including one or more cameras,"
Delete "place" and
Insert -- placed --.

Column 13, Line 14, Claim 80:
After "on the structure"
Delete "or" and
Insert -- for --.

Column 13, Line 31-32, Claim 80:
After "associated with the target as the target"
Delete "move" and
Insert -- moves --.

Column 14, Lines 2-3, Claim 81:
After "a change to intensity or color or a"
Delete "chance" and
Insert -- change --.

Column 14, Line 38, Claim 84:
After "The illuminating device"
Delete "or" and
Insert -- of --.