US008773360B2

(12) **United States Patent**
Uchida et al.

(10) **Patent No.: US 8,773,360 B2**
(45) **Date of Patent: Jul. 8, 2014**

(54) **DISPLAY DEVICE, TWO-WAY COMMUNICATION SYSTEM AND DISPLAY INFORMATION USING METHOD**

(75) Inventors: **Mami Uchida**, Saitama (JP); **Ayumi Mizobuchi**, Tokyo (JP); **Tamao Katayama**, Tokyo (JP); **Yuki Kitamura**, Tokyo (JP); **Kenichirou Matsumura**, Tokyo (JP); **Miwako Yoritate**, Tokyo (JP)

(73) Assignee: **Sony Corporation**, Tokyo (JP)

(*) Notice: Subject to any disclaimer, the term of this patent is extended or adjusted under 35 U.S.C. 154(b) by 1059 days.

(21) Appl. No.: **10/990,580**

(22) Filed: **Nov. 17, 2004**

(65) **Prior Publication Data**

US 2005/0184968 A1 Aug. 25, 2005

(30) **Foreign Application Priority Data**

Nov. 19, 2003 (JP) 2003-388715

(51) **Int. Cl.**
G06F 3/041 (2006.01)

(52) **U.S. Cl.**
USPC **345/173**; 715/700; 715/788; 715/798; 715/800; 725/40

(58) **Field of Classification Search**
USPC 345/87, 173–176, 169, 158, 2.1, 2.2, 345/2.3, 629, 660; 715/700, 517–521, 788, 715/798, 800; 725/131–133, 80–81, 40, 725/43–44, 139, 141; 455/557, 3.06
See application file for complete search history.

(56) **References Cited**

U.S. PATENT DOCUMENTS

5,651,109	A *	7/1997	Glasser et al.	345/522
5,732,230	A *	3/1998	Cullen et al.	715/764
5,767,919	A *	6/1998	Lee et al.	725/37
6,169,568	B1 *	1/2001	Shigetomi	725/76
6,469,633	B1 *	10/2002	Wachter	340/4.37
6,559,813	B1 *	5/2003	DeLuca et al.	345/8
6,822,698	B2 *	11/2004	Clapper	348/734

(Continued)

FOREIGN PATENT DOCUMENTS

JP	A 10-294907	11/1998
JP	A 2001-268468	9/2001

(Continued)

OTHER PUBLICATIONS

Japanese Office Action dated Jul. 15, 2009.

Primary Examiner — Jason Mandeville
(74) *Attorney, Agent, or Firm* — Frommer Lawrence & Haug LLP; William S. Frommer; Ellen Marcie Emas

(57) **ABSTRACT**

Even in the case of displaying operation display information, an image to be displayed on a display screen is prevented from being difficult to see, and an operation input by using the operation display information is always appropriately conducted. A display device receives an information signal from a base device, and displays main display information that is an image derived from a display signal of the information signal on an LCD. In the case where the display device displays a control panel for accepting an operation input from a user on the LCD, the display device controls a size change processor so that a size and a position of display of the main display information is so changed as not to overlap with display of the control panel.

8 Claims, 13 Drawing Sheets

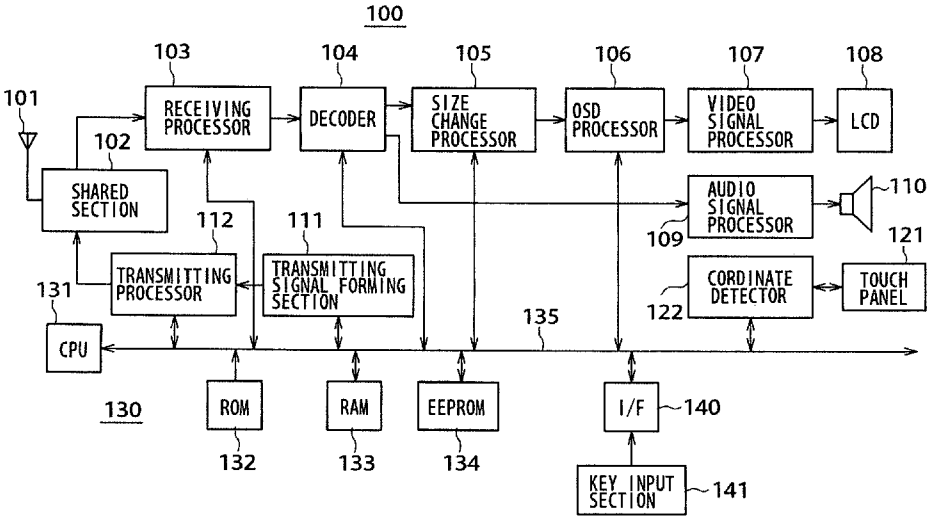

(56) **References Cited**

U.S. PATENT DOCUMENTS

7,222,306	B2 *	5/2007	Kaasila et al.	715/801
7,376,909	B1 *	5/2008	Coyle	715/778
2002/0054028	A1 *	5/2002	Uchida et al.	345/173
2003/0025676	A1 *	2/2003	Cappendijk	345/173
2003/0056215	A1 *	3/2003	Kanungo	725/38
2003/0197687	A1 *	10/2003	Shetter	345/173
2004/0090424	A1 *	5/2004	Hurley et al.	345/169
2004/0130576	A1 *	7/2004	Fujita et al.	345/781

FOREIGN PATENT DOCUMENTS

JP	A 2002-034023		1/2002
JP	2002055750	A *	2/2002
JP	A 2003-087673		3/2003
JP	A 11-266413		9/2009

* cited by examiner

FIG. 1

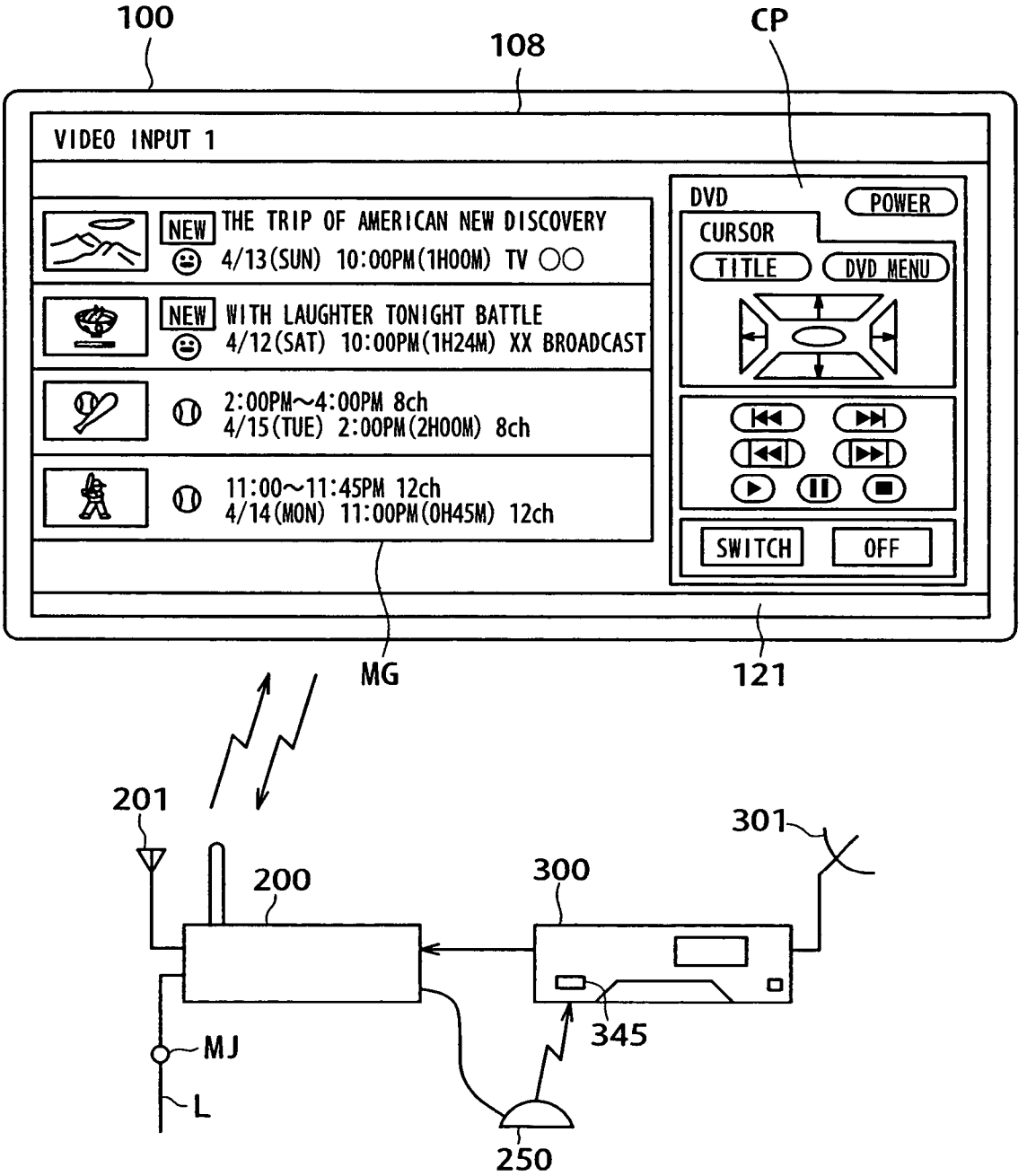
100
108
CP
VIDEO INPUT 1
NEW
THE TRIP OF AMERICAN NEW DISCOVERY
4/13(SUN) 10:00PM(1H00M) TV ○○
NEW
WITH LAUGHTER TONIGHT BATTLE
4/12(SAT) 10:00PM(1H24M) XX BROADCAST
2:00PM~4:00PM 8ch
4/15(TUE) 2:00PM(2H00M) 8ch
11:00~11:45PM 12ch
4/14(MON) 11:00PM(0H45M) 12ch
DVD
POWER
CURSOR
TITLE
DVD MENU
SWITCH
OFF
MG
121
201
200
300
301
345
MJ
L
250

FIG. 2

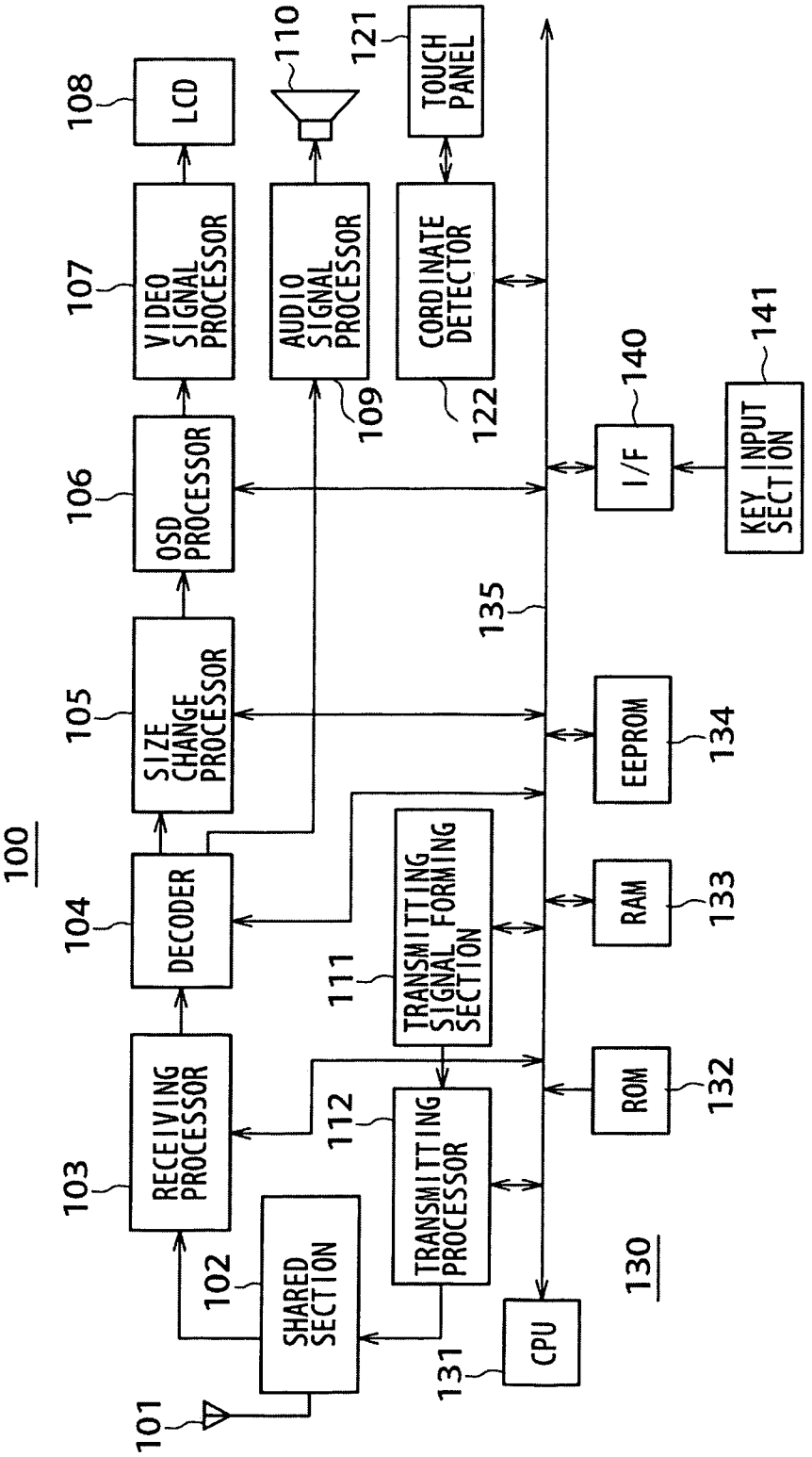
100
101
102
SHARED SECTION
103
RECEIVING PROCESSOR
104
DECODER
105
SIZE CHANGE PROCESSOR
106
OSD PROCESSOR
107
VIDEO SIGNAL PROCESSOR
108
LCD
109
AUDIO SIGNAL PROCESSOR
110
111
TRANSMITTING SIGNAL FORMING SECTION
112
TRANSMITTING PROCESSOR
121
TOUCH PANEL
122
CORDINATE DETECTOR
130
131
CPU
132
ROM
133
RAM
134
EEPROM
135
140
I/F
141
KEY INPUT SECTION

FIG. 3

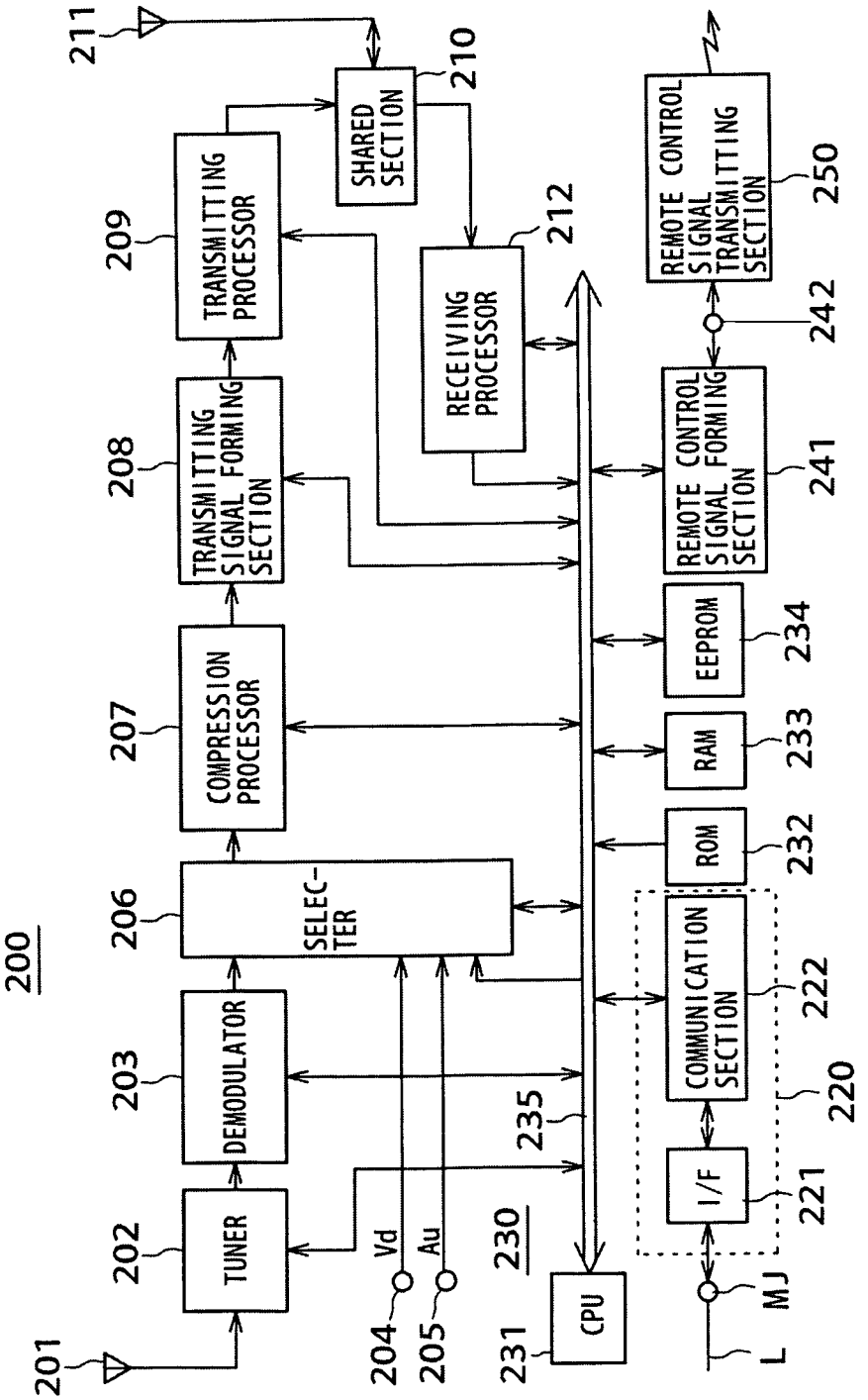
200
201
202
TUNER
203
DEMODULATOR
206
SELEC-
TER
207
COMPRESSION
PROCESSOR
208
TRANSMITTING
SIGNAL FORMING
SECTION
209
TRANSMITTING
PROCESSOR
211
210
SHARED
SECTION
212
RECEIVING
PROCESSOR
204
Vd
205
Au
230
231
CPU
235
ROM
232
RAM
233
EEPROM
234
COMMUNICATION
SECTION
222
I/F
221
220
MJ
L
REMOTE CONTROL
SIGNAL FORMING
SECTION
241
242
REMOTE CONTROL
SIGNAL
TRANSMITTING
SECTION
250

FIG. 4

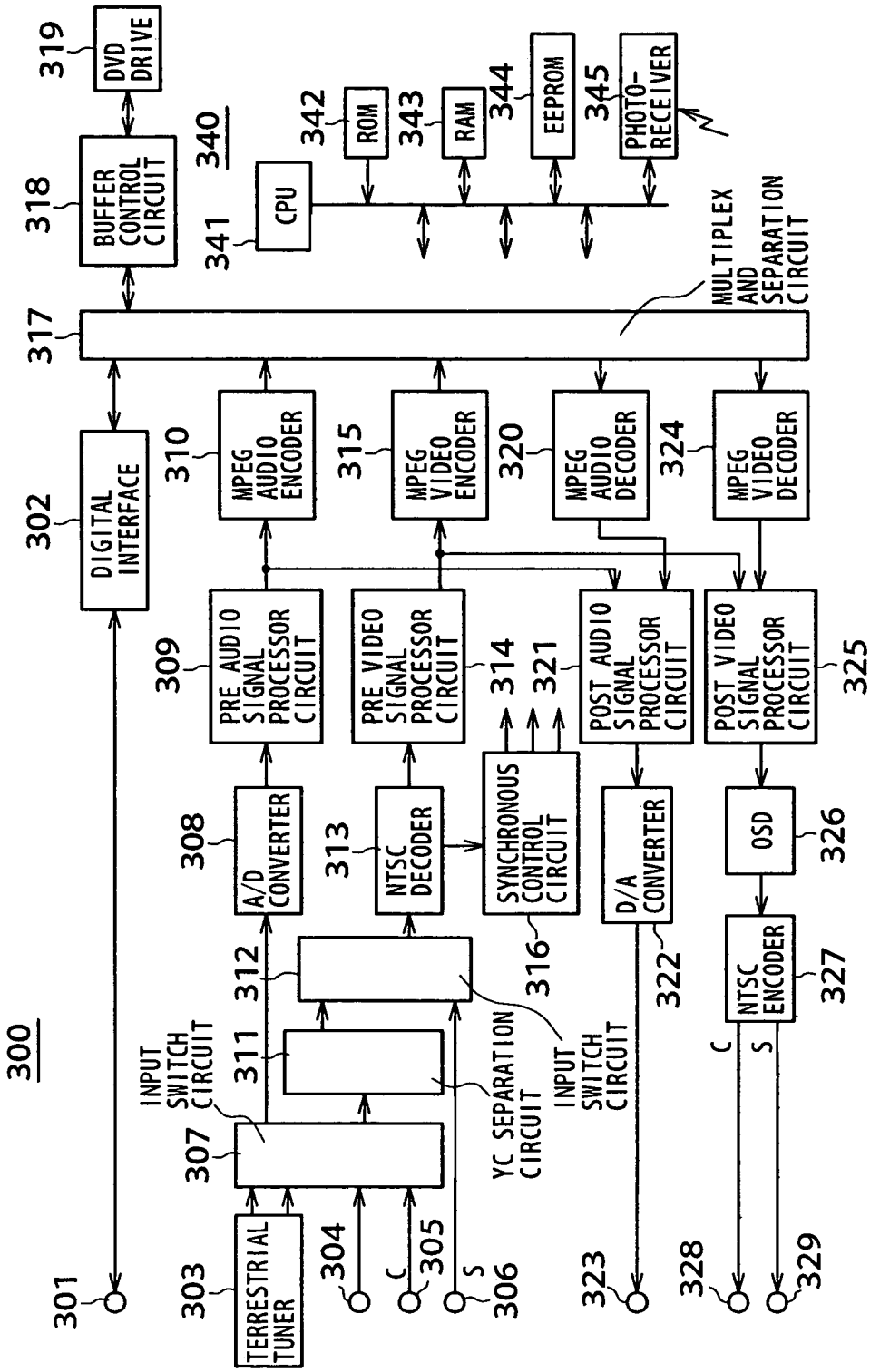
300
301
302
DIGITAL INTERFACE
303
TERRESTRIAL TUNER
304
305
306
307
INPUT SWITCH CIRCUIT
308
A/D CONVERTER
309
PRE AUDIO SIGNAL PROCESSOR CIRCUIT
310
MPEG AUDIO ENCODER
311
312
YC SEPARATION CIRCUIT
313
NTSC DECODER
314
PRE VIDEO SIGNAL PROCESSOR CIRCUIT
315
MPEG VIDEO ENCODER
316
SYNCHRONOUS CONTROL CIRCUIT
317
MULTIPLEX AND SEPARATION CIRCUIT
318
BUFFER CONTROL CIRCUIT
319
DVD DRIVE
320
MPEG AUDIO DECODER
321
POST AUDIO SIGNAL PROCESSOR CIRCUIT
322
D/A CONVERTER
323
324
MPEG VIDEO DECODER
325
POST VIDEO SIGNAL PROCESSOR CIRCUIT
326
OSD
327
NTSC ENCODER
328
329
340
341
CPU
342
ROM
343
RAM
344
EEPROM
345
PHOTO-RECEIVER

FIG. 5

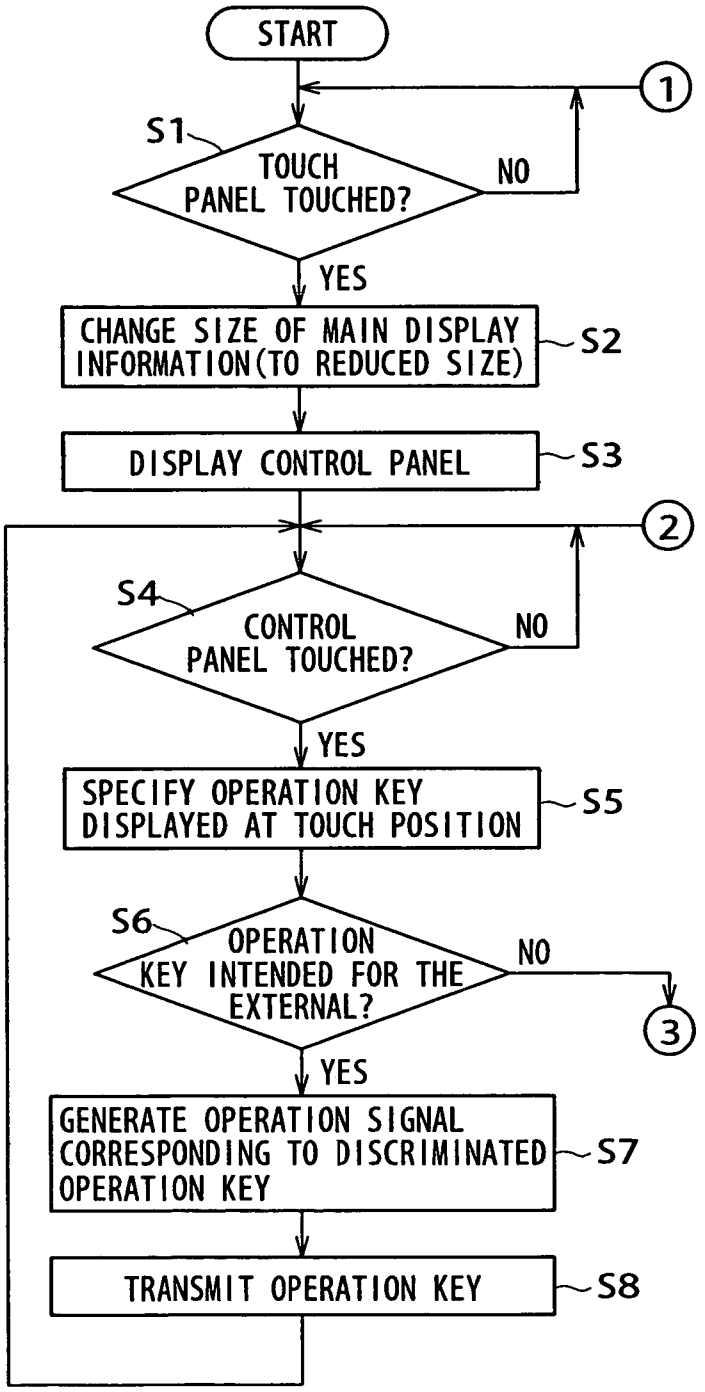
START
1
S1
TOUCH PANEL TOUCHED?
NO
YES
CHANGE SIZE OF MAIN DISPLAY INFORMATION(TO REDUCED SIZE)
S2
DISPLAY CONTROL PANEL
S3
2
S4
CONTROL PANEL TOUCHED?
NO
YES
SPECIFY OPERATION KEY DISPLAYED AT TOUCH POSITION
S5
S6
OPERATION KEY INTENDED FOR THE EXTERNAL?
NO
3
YES
GENERATE OPERATION SIGNAL CORRESPONDING TO DISCRIMINATED OPERATION KEY
S7
TRANSMIT OPERATION KEY
S8

FIG. 6

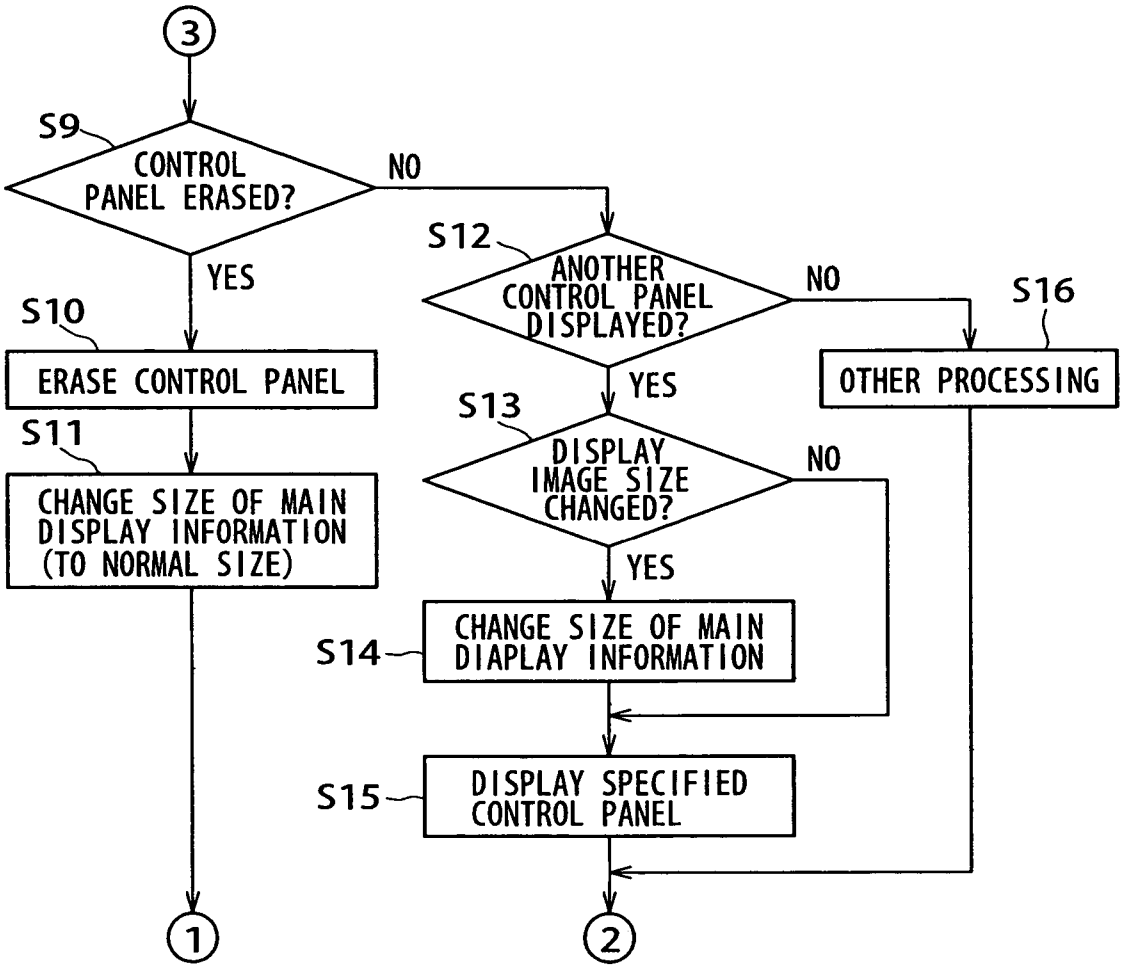
3
S9
CONTROL PANEL ERASED?
NO
YES
S10
ERASE CONTROL PANEL
S11
CHANGE SIZE OF MAIN DISPLAY INFORMATION (TO NORMAL SIZE)
1
S12
ANOTHER CONTROL PANEL DISPLAYED?
NO
YES
S16
OTHER PROCESSING
S13
DISPLAY IMAGE SIZE CHANGED?
NO
YES
S14
CHANGE SIZE OF MAIN DIAPLAY INFORMATION
S15
DISPLAY SPECIFIED CONTROL PANEL
2

FIG. 7

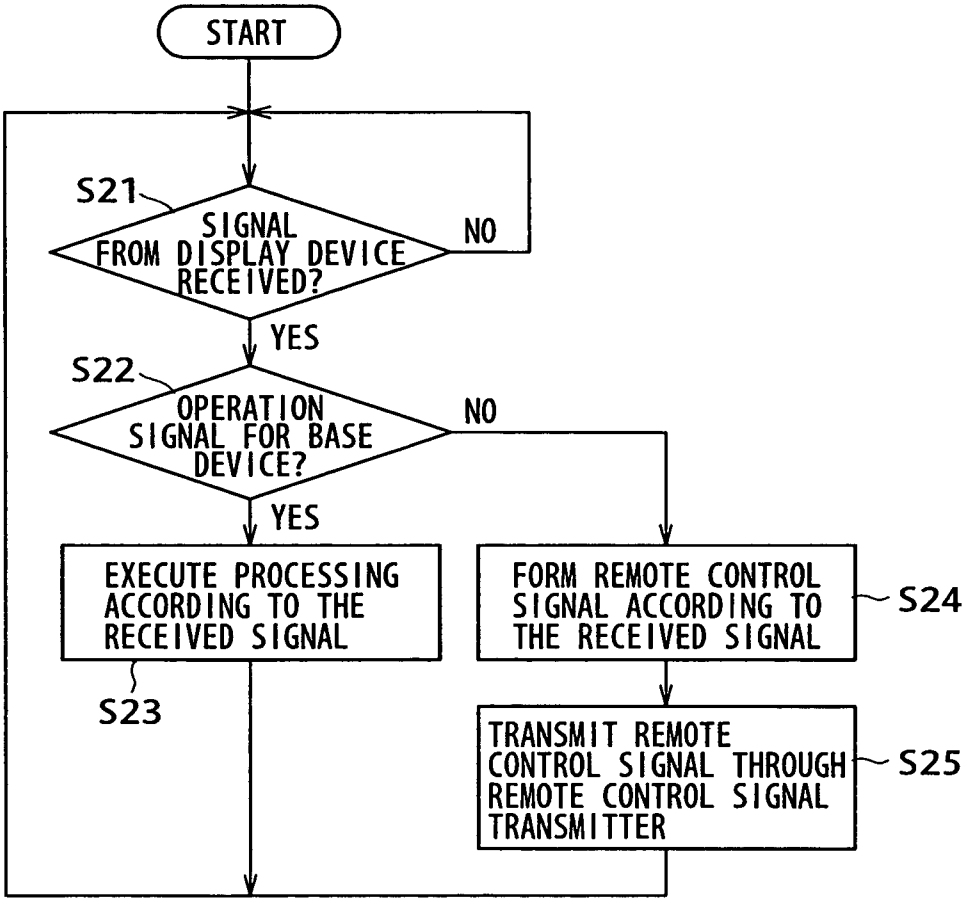
START
S21
SIGNAL FROM DISPLAY DEVICE RECEIVED?
NO
YES
S22
OPERATION SIGNAL FOR BASE DEVICE?
NO
YES
EXECUTE PROCESSING ACCORDING TO THE RECEIVED SIGNAL
S23
FORM REMOTE CONTROL SIGNAL ACCORDING TO THE RECEIVED SIGNAL
S24
TRANSMIT REMOTE CONTROL SIGNAL THROUGH REMOTE CONTROL SIGNAL TRANSMITTER
S25

FIG. 8

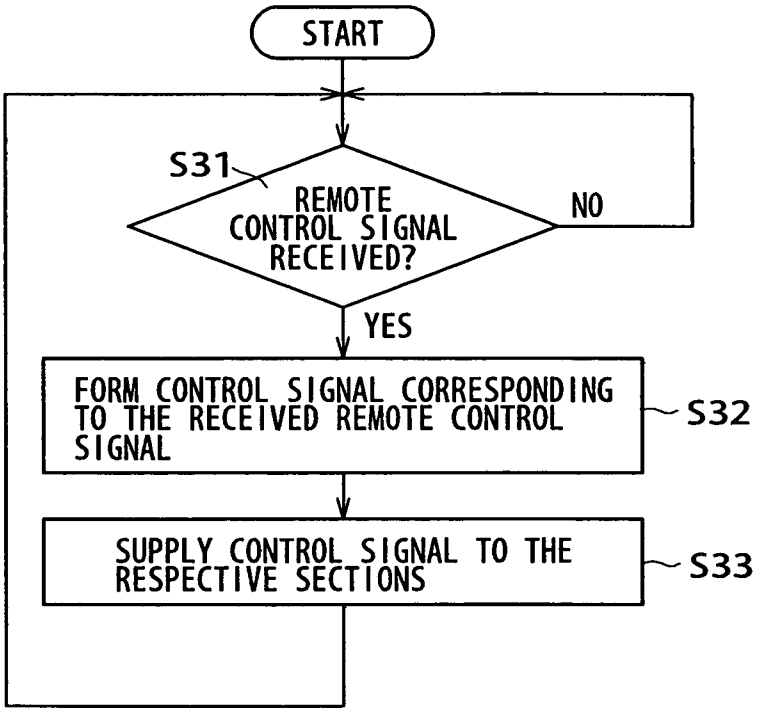
START
S31
REMOTE CONTROL SIGNAL RECEIVED?
NO
YES
FORM CONTROL SIGNAL CORRESPONDING TO THE RECEIVED REMOTE CONTROL SIGNAL
S32
SUPPLY CONTROL SIGNAL TO THE RESPECTIVE SECTIONS
S33

FIG. 9

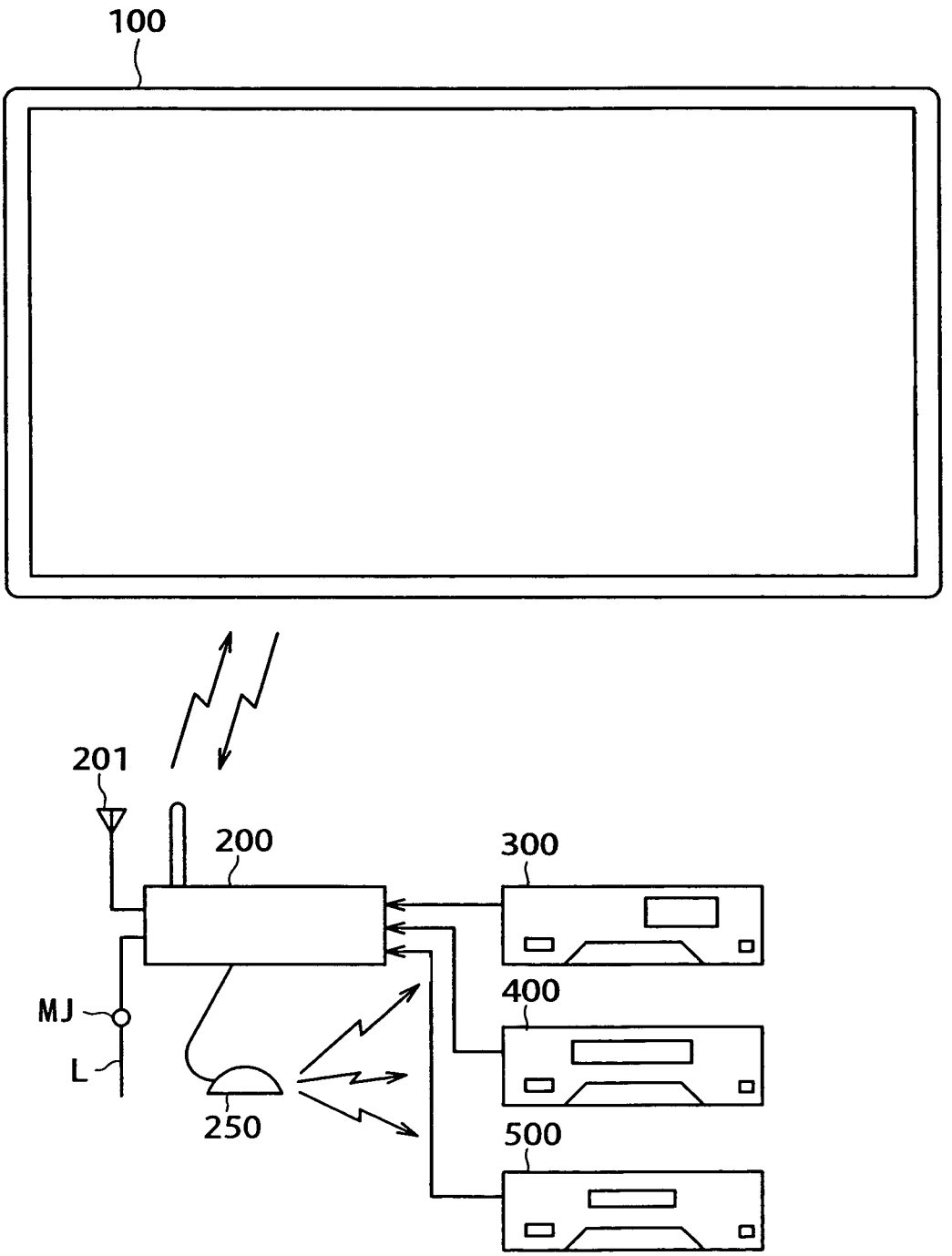

FIG. 10A

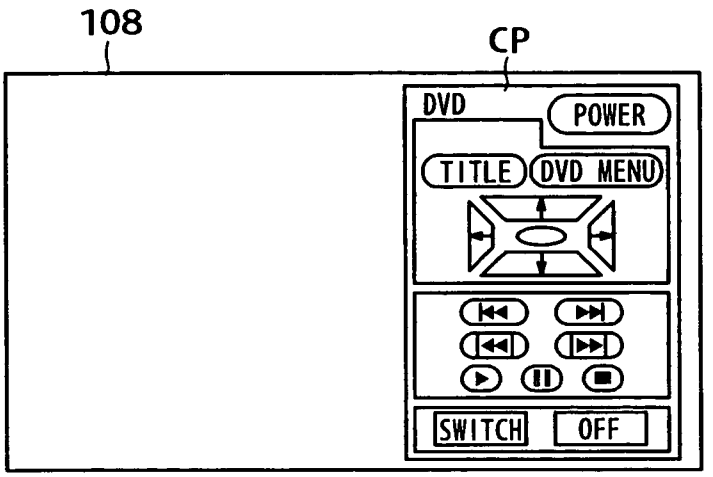

FIG. 10B

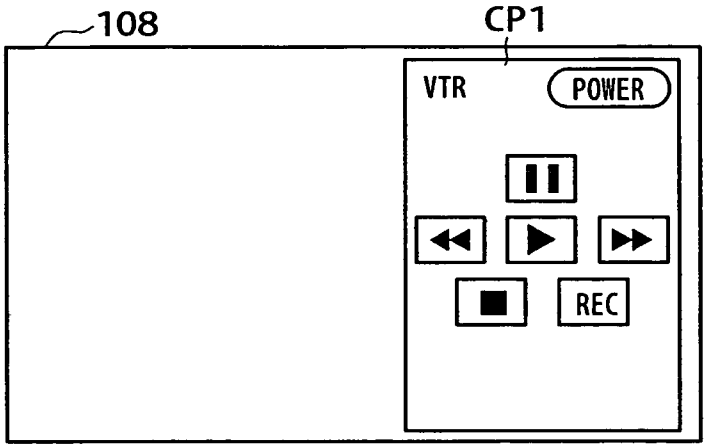

FIG. 10C

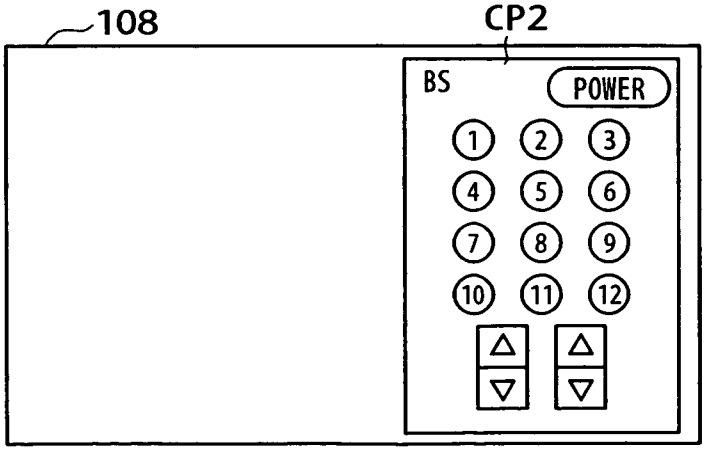

FIG. 11A

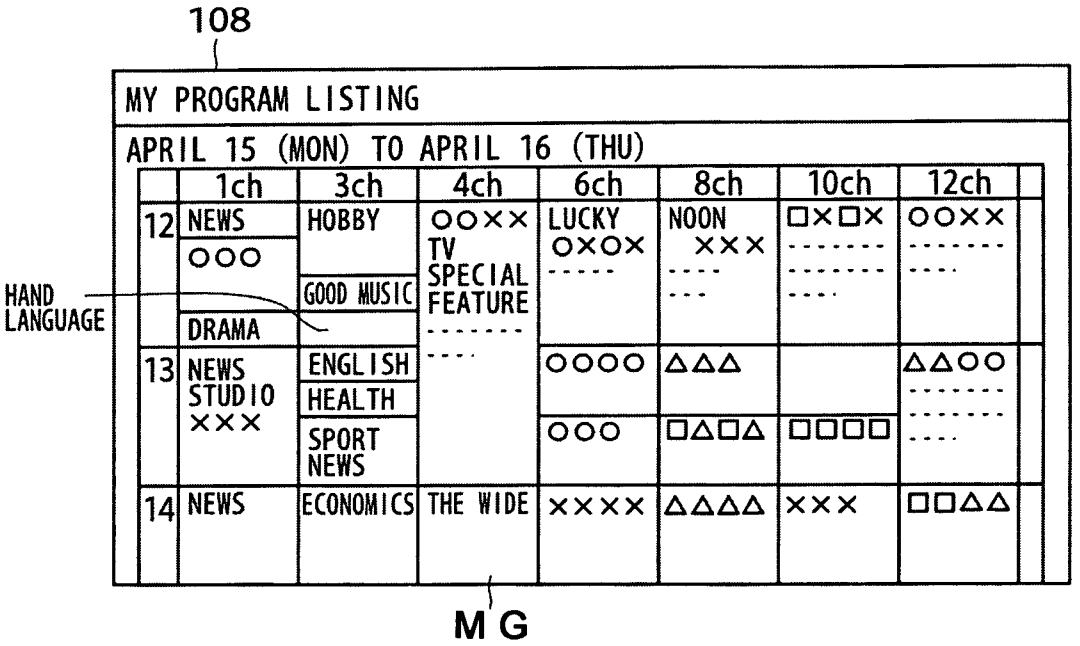

FIG. 11B

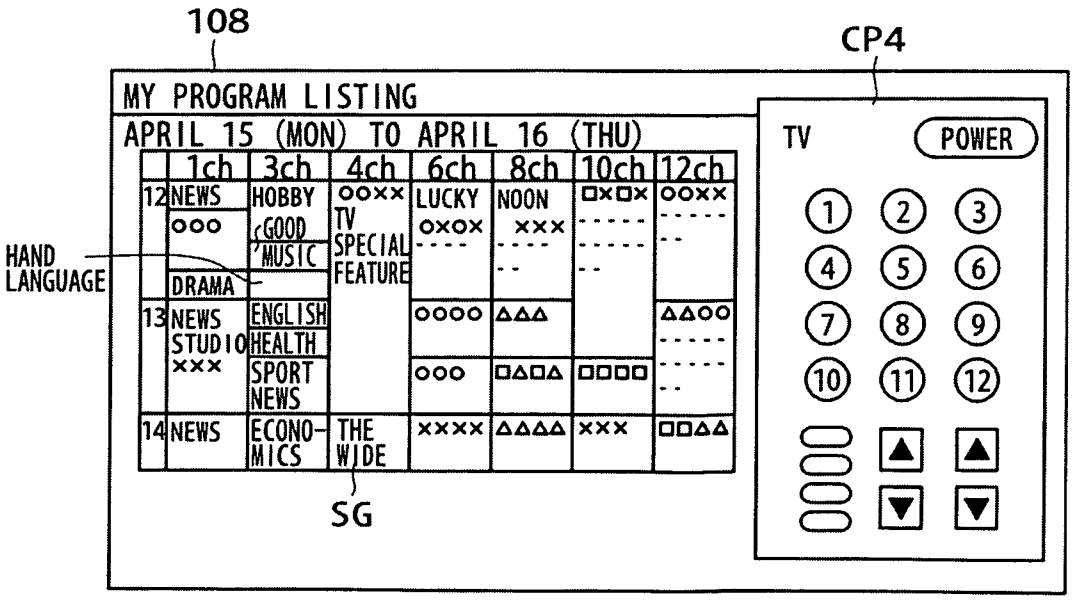

FIG. 12A

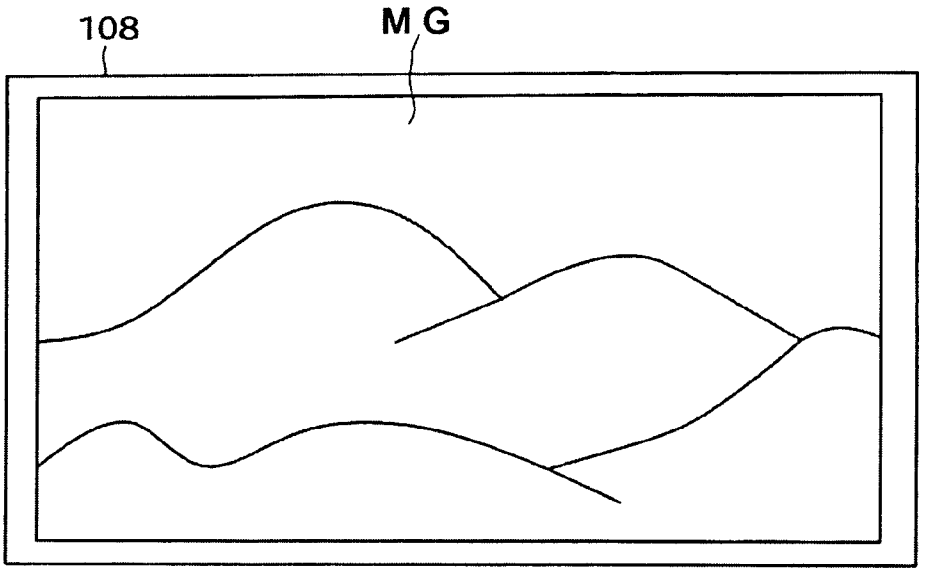

FIG. 12B

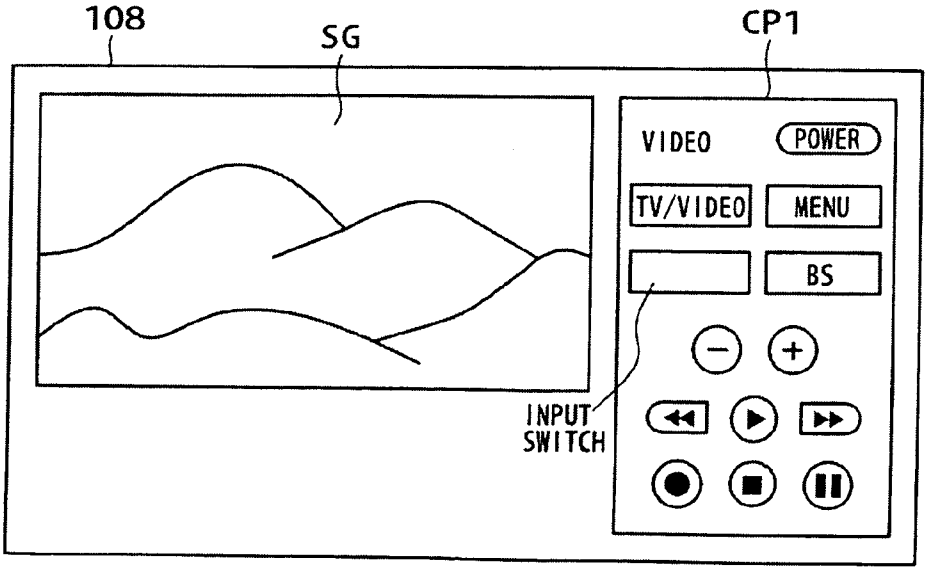

FIG. 13A

PRIOR ART

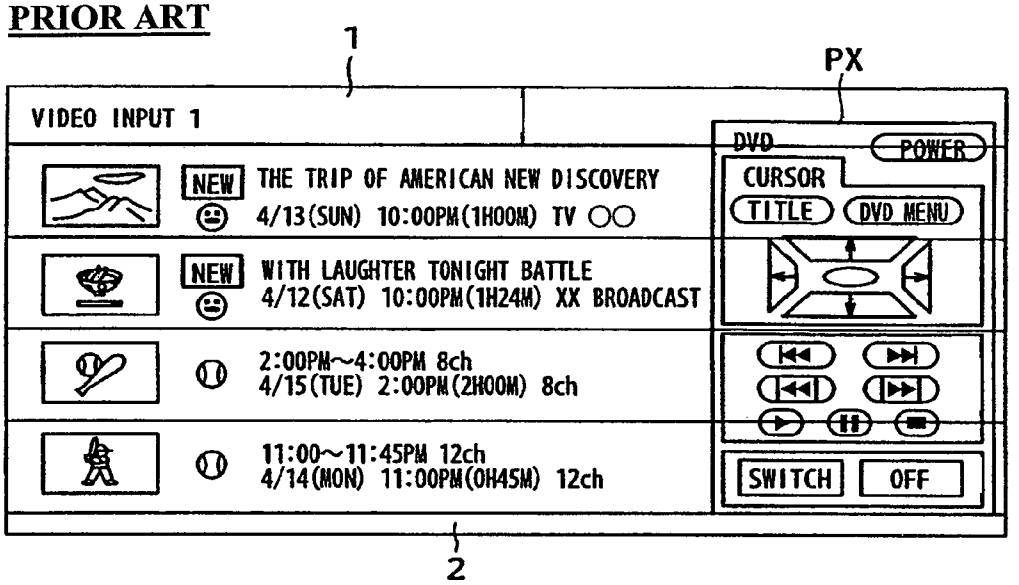

FIG. 13B

PRIOR ART

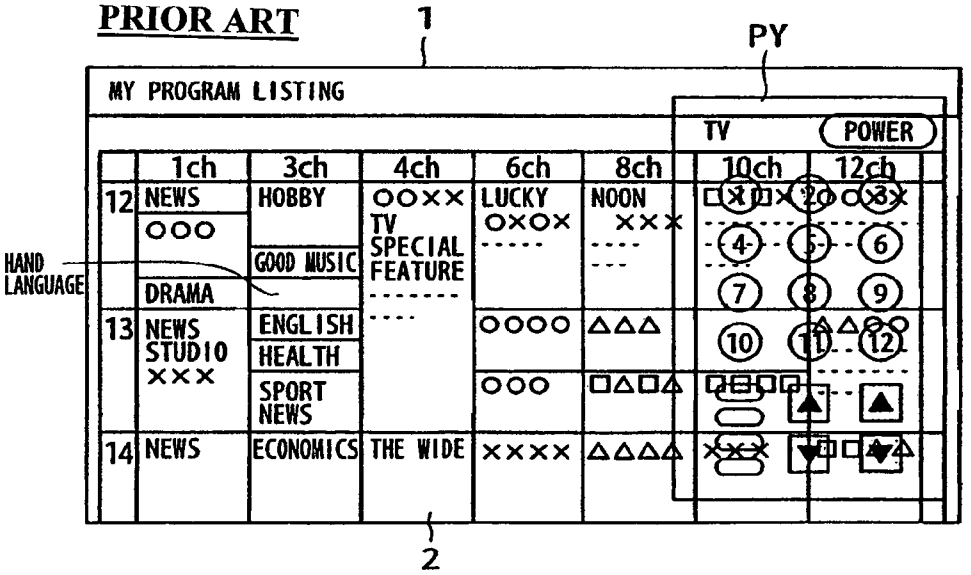

DISPLAY DEVICE, TWO-WAY COMMUNICATION SYSTEM AND DISPLAY INFORMATION USING METHOD

BACKGROUND OF THE INVENTION

Field of the Invention

The present invention relates to a display device having a function of receiving various operation inputs from a user, a two-way communication system providing the display device having the function of receiving various operation inputs from a user, and a display information using method used in the system.

There is now provided a display device such as a television receiver which is thinned and lightened in weight by using an LCD (liquid crystal display) or the like, so as to be portable and used within the reach of a user. The display device of this type does not require a remote commander (hereinafter referred to as "remote controller") which is a remote controller.

Also, it is troublesome to operate external input devices such as an STB (set-top box) that supplies a video signal or an audio signal to the display device, a satellite receiver that is called "IRD (integrated receiver decoder)", a VTR (video tape recorder), or a DVD (digital versatile disc) recorder by using remote controllers of the respective external input devices.

Under the above circumstances, JP2002-34023A has proposed a display device, a base device and a two-way communication system having the display device and the base device which are constituted, respectively, as follows: The display device has a function of the remote controller having a touch panel on a display screen of the display device, receiving an operation input from a user by means of operation display information displayed on the display screen and the touch panel, and allowing a remote control signal corresponding to the received operation input to be formed and sent. The base device supplies an information signal such as a video signal to the display device and is connected with an external input device such as a VTR or a DVD recorder. The two-way communication system has the display device and the base device each having the above structure.

SUMMARY OF THE INVENTION

However, in the case of using the technique disclosed in JP 2002-34023A, an image displayed on the entire display screen of the display device may hide behind the operation display information to make it difficult to see important information. In particular, there is a case in which the image displayed on the entire display screen of the display device is, for example, information including a large amount of character information such as recording history information from the DVD recorder or an EPG (electronic program guide) from the STB or the IRD. In this case, it may be hard to accurately comprehend the display information.

For example, there is a case in which the recording history information from the DVD recorder is displayed on the entire display screen of an LCD **1** onto which a touch panel **2** is attached as shown in FIG. **13**A. In this case, when a control panel PX that is the operation display information for the DVD recorder is displayed, it is hard to see a part of the recording history information, thereby making it hard to select desired information.

Also, there is a case in which the EPG from the STB or the IRD is displayed on the entire display screen of the LCD **1** onto which the touch panel **2** is attached as shown in FIG. **13**B. In this case, when a control panel PY that is the operation display information for the STB or the IRD is displayed, it is hard to see a part of the EPG, thereby making it hard to select a desired program.

In view of the above, an object of the present invention is to provide a device, a system and a method which prevent information displayed on a display screen from being hard to see so that an operation input using operation display information can always be appropriately conducted even in the case where the operation display information is displayed.

In order to achieve the above object, according to a first aspect of the present invention, there is provided a display device, comprising:

- receiving means for receiving an information signal;
- a display element for displaying an image corresponding to a display signal of the information signal that is received from the receiving means;
- operation display processing means for displaying operation display information for receiving an operation input from a user on the display element;
- adjusting means for adjusting at least a size of the image corresponding to the display signal of the information signal from the receiving means according to the operation display information so that the image is displayed on the display element;
- touch position detecting means disposed on a display screen of the display element for detecting a touch position on the display screen which is touched by the user; and
- control means for conducting processing corresponding to a display item of the operation display information which is displayed at the touch position on the display screen which is detected by the touch position detecting means.

According to the display device of the first aspect of the present invention, the image corresponding to the display signal of the information signal that is received by the receiving means is displayed on the display element. Also, the operation display information is displayed on the display element by the operation display processing means. Then, in the case where the operation display information is displayed, the size of the image to be displayed on the display element according to the display signal of the information signal is adjusted by the adjusting means.

That is, in the case where the operation display information is displayed on the display element, the image corresponding to the display signal of the received information signal is reduced so that the operation display information does not overlap with the image corresponding to the display signal of the received information signal. Then, the function of receiving the operation input from the user is realized by the operation display information and the touch position detecting means. Processing can be conducted according to the operation input from the user which is received through the receiving function under the control of the control means.

With the above structure, even in the case where the operation display information is displayed on the display element, all of the information from the image corresponding to the display signal is appropriately supplied to the user. Then, the instruction input is received from the user through the operation display information and the touch position detecting means, and processing can be conducted according to the instruction input.

Also, according to a second aspect of the present invention, there is provided the display device according to the first aspect, further comprising:

forming means for forming a remote control signal with respect to another electronic device which corresponds to the display item of the operation display information which is displayed at the touch position on the display screen which is detected by the touch position detecting means; and

transmitting means for transmitting the remote control signal formed by the forming means.

According to the display device of the second aspect of the present invention, the function of receiving the operation input from the user is realized by the operation display information and the touch position detecting means. The remote control signal corresponding to the operation input from the user which is received through the operation display information and the touch position detecting means is formed by the forming means. The formed remote control signal is transmitted through the transmitting means.

This makes it possible to add the function of the remote controller to the image display device and to remotely control an electronic device that is a supplier of the information signal such as a video signal which is supplied to the display device. Moreover, even in the case where the operation display information is displayed, the image derived from the display signal of the received information signal is prevented from being difficult to see.

According to the present invention, even in the case where the operation display information is displayed on the display screen of the display element, the image derived from the display signal of the received information signal can be reduced and displayed so as not to overlap with the operation display information. As a result, the use can input an appropriate instruction input without fail while confirming all of the display information which is displayed on the display screen of the display element.

Also, the size of the image derived from the display signal of the received information signal is automatically adjusted according to display or non-display of the operation display information. As a result, it is unnecessary for the user to conduct such troublesome work as instructing the size of the image derived from the display signal of the received information signal each time.

BRIEF DESCRIPTION OF THE DRAWINGS

These and other objects, features and advantages of the present invention will become more apparent upon consideration of the following description of the preferred embodiments of the present invention taken in conjunction with the accompanying drawings.

FIG. **1** is a diagram for explaining a two-way communication system in accordance with an embodiment of the present invention;

FIG. **2** is a block diagram for explaining a display device according to an embodiment of the present invention;

FIG. **3** is a block diagram for explaining a base device;

FIG. **4** is b block diagram for explaining a DVD device;

FIG. **5** is a flowchart for explaining processing that is conducted in the display device shown in FIG. **2**;

FIG. **6** is a flowchart subsequent to FIG. **5**;

FIG. **7** is a flowchart for explaining processing that is conducted in the base device shown in FIG. **3**;

FIG. **8** is a diagram for explaining processing that is conducted in the DVD device shown in FIG. **4**;

FIG. **9** is a diagram for explaining an example in which a plurality of external input devices are connected to the base device;

FIGS. **10**A to **10**C are diagrams for explaining examples of a control panel that is displayed on a display element of the display device, respectively;

FIGS. **11**A and **11**B are diagrams showing an example of the display of main display information having a normal size, and the display of size-reduced main display information and the control panel;

FIGS. **12**A and **12**B are diagrams showing another example of the main display information having the normal size and the display of the size-reduced main display information and the control panel; and

FIGS. **13**A and **13**B are diagrams for explaining a conventional display example in the case of displaying record history information and an EPG as well as a touch panel.

DETAILED DESCRIPTION OF THE PREFERRED EMBODIMENTS

Now, a device, a system and a method according to an embodiment of the present invention will be described with reference to the accompanying drawings.

[Outline of Two-Way Communication System]

FIG. **1** is a diagram for explaining a two-way communication system according to this embodiment, to which the system and the method according to the present invention are applied. As shown in FIG. **1**, the two-way communication system according to this embodiment is made up of a display device **100**, a base device (base station) **200**, and a DVD device (DVD recorder) **300** as an external input device.

The display device **100** is a display device to which the present invention is applied, and has an LCD **108** as the display element. The display device **100** is connected to the base device **200** through a radio communication so as to receive the information signal from the base device **200** and also to transmit a control signal to the base device **200**.

The base device **200** is connected to an antenna **201** that receives an analog terrestrial television signal, and includes a tuner that tunes in to the analog terrestrial television signal as will be described later. The base device **200** also includes a communication processor such as a modem or a terminal adaptor for connection to a communication network such as a telephone network or the Internet, so as to be connected to the telephone network or the Internet through a telephone line L. In FIG. **1**, a terminal MJ is a joining terminal for the telephone line L that is led out of the external.

Also, the base device **200** includes an external input terminal as will be described later, so as to be connected with various external input devices such as a DVD device, a VTR, an STB or an IRD. In this embodiment, as shown in FIG. **1**, the base device **200** is connected with the DVD device **300** as the external input device.

Then, the base device **200** tunes to the analog television signal in by means of its tuner. The base device **200** then compresses an information signal such as a video signal or an audio signal of a television program which is obtained by demodulation, or video data or audio data that is obtained from the communication network through its communication processor, or the video signal or the audio signal from the DVD device **300**, forms a transmitting signal and transmits the transmitting signal to the display device **100**.

The display device **100** receives the transmitting signal from the base device **200**, demodulates the transmitting signal, and extracts the video signal and a display signal such as text data from the demodulated transmitting signal. Then, the display device **100** displays an image corresponding to the display signal on an LCD **108**, extracts the audio signal from

the demodulated transmitting signal, and sounds a voice corresponding to the audio signal from a speaker.

Also, as shown in FIG. **1**, the display device **100** is so designed as to display a control panel CP which is operation display information for receiving an operation input made to control the DVD device **300** on the LCD **108**. Then, a touch panel **121** is attached onto the LCD **108** as will be described later, and can receive the operation input from the user by means of the display of the control panel CP and the touch panel **121**.

The control panel CP for the DVD device **300** is a so-called software key which is displayed by software to be executed by a control section of the display device **100**. In this embodiment, in a state where the operation display information such as the control panel CP is not displayed on the display screen of the LCD **108**, when a user's finger or the like is brought in contact with the touch panel **121** that is attached onto the display screen of the LCD **108**, the control panel CP is displayed. Also, when the finger is brought in contact with a predetermined operation key portion on the displayed control panel CP, the control panel CP that is displayed on the display screen can be erased, or another control panel can be displayed.

In this embodiment, as shown in FIG. **1**, the control panel CP is used for the DVD device **300**. In this example, as shown in FIG. **1**, the control panel CP is provided with various operation keys such as an on/off key of a power supply, a title key, a DVD menu key, arrow keys (an up arrow key, a down arrow key, a right arrow key, a left arrow key), a decision key, a backward skip key, a forward skip key, a fast rewind key, a fast forward key, are production key, a pause key, a stop key, a device change key, and a display off key of the control panel.

Also, a layout of the operation keys of the control panel for the DVD device shown in FIG. **1** is shown as one example, and various layouts can be taken. Accordingly, it is possible to form and display a control panel having more operation keys arranged other than the control panel CP shown in FIG. **1**. Alternatively, it is possible to form and display the control panel having only a minimum of operation keys.

Then, the display device **100** detects the touch position (coordinate position) on the touch panel **121** that is attached onto the LCD **108** with which the user's finger was in contact, discriminates the operation key (display item) of the control panel CP which is displayed at the touched position, and moves the display position of a cursor. Alternatively, the display device **100** forms an operation signal corresponding to the operation key which is touched, and transmits the operation signal to the base device **200** by radio.

That is, the control panel CP for the DVD and the touch panel **121** according to this embodiment function as a GUI (graphical user interface) for receiving an instruction input to the display device **100** and an instruction input to the DVD device **300**.

As shown in FIG. **1**, the base device **200** is connected with a remote control signal transmitter **250** through a joining terminal for connection to the remote control signal transmitter **250**. The remote control signal transmitter **250** generates a remote control signal corresponding to the operation signal from the display device **100**, and then transmits the remote control signal to the DVD device **300**.

The DVD device **300** originally has a remote control signal photoreceiver **345** such as a photodetector for optically receiving an infrared remote control signal from a remote controller of the DVD device **300**. Upon receiving the remote control signal from the remote control signal transmitter **250** that is connected to the base device **200**, the remote control signal photoreceiver **345** performs the remote control so as to conduct control according to the remote control signal. For example, the remote control signal photoreceiver **345** conducts the on/off operation of a power supply, or the reproduction, fast rewind or fast forwarding of intended contents which have been recorded in the DVD, or the pause or stop of those operation.

Accordingly, the user can move a cursor position by conducting the operation input that instructs the movement of the displayed cursor through the control panel CP that is displayed on the LCD **108** of the display device **100**, and the touch panel **121** in a so-called one-touch operation manner. Alternatively, the user can remotely controls the DVD device through the base device **200** by conducting the operation input with respect to the DVD device **300** in the so-called one-touch operation manner.

As described above, it is possible to conduct two-way radio communication between the display device **100** and the base device **200**. Also, it is possible to conduct two-way communication between the base device **200** and the DVD device **300** as the external input device.

Since the display device **100** is downsized and lightened in weight and also connected to the base device **200** by a radio communication, the display device **100** is suitable for carry. For that reason, when the user carries the display device **100** within an area that can communicate with the base device **200**, the user can reproduce and output the information signal that is supplied from the base device **200** so as to provide the information by means of the display device **100** everywhere.

Accordingly, as described above, the user can watch a television program which is tuned in by the tuner of the base device **200**, or watch the contents that have been recorded in the DVD loaded in the DVD device **300** by means of the display device **100**. Also, in the case where the base device **200** is connected with a VTR, an STB or an IRD as an external input device, the user can watch the contents from the VRT, the STB or the IRD.

Also, the user can acquire through the communication processor of the base device **200** information of a so-called web page that is provided on the Internet and watch the information of the web page by means of the display device **100**. Also, the user can receive e-mail addressed to the user and watch the e-mail displayed on the LCD **108** by means of the display device **100**. Further, the user can prepare and transmit an e-mail to an intended third party by means of the display device **100**.

In the case of preparing the e-mail, the user conducts predetermined operation with respect to the display device **100** so as to display on the LCD **108** a software keyboard consisting of, for example, alphabet keys, the Japanese syllabary and so on, and prepare the e-mail through the software keyboard and the touch panel **121**. Then, the user conducts predetermined operation, of example, operates the transmission key, thereby making it possible to transmit the prepared e-mail to the base device **200** and transmit the e-mail to the third party through the base device **200**.

As described above, the base device **200** is so designed as to connect an external input device such as the DVD device **300**, various information transmission mediums such as a communication network, for example, a terrestrial television broadcast or an Internet, and the display device **100**. Then, upon receiving the information signal from the base device **200**, the display device **100** reproduces and outputs the information signal for supply to the user. The display device **100** also forms the transmission information such as the e-mail and transmits the transmission information through the base device **200**.

Then, in the display device **100** according to this embodiment, when the operation display information such as the control panel CP is displayed, main display information MG is reduced in size and displayed so as not to make it difficult to see the main display information MG as described with respect to FIG. **12**. In the example shown in FIG. **1** the main display information MG is record history information related to the DVD that is loaded in the DVD device **300**, and is to be originally displayed on the entire display screen of the LCD **108**. However, the main display information MG is reduced in size and displayed in order to prevent the display area of the main display information MG from overlapping that of the control panel CP.

As will be described later, the main display information is not limited to the record history information of the DVD. For example, in the case where the control panel such as the image of the television program or the EPG (electronic program listing) is not displayed, the main display information is displayed on the entire display screen of the LCD **108** and supplied to the user. Accordingly, the control panel is regarded as so-called auxiliary display information which is displayed as required.

[Display Device **100**]

Then, the respective devices that constitute the two-way communication system according to this embodiment will be described in more detail. First, a description will be given of the display device **100** that conducts a change in the size of the main display information (a change in the size) according to the display/non-display of the control panel CP. FIG. **2** is a diagram for explanation of the display device **100** according to this embodiment.

As shown in FIG. **2**, the display device **100** includes a transmitting and receiving antenna **101**, an antenna shared section **102**, a receiving processor **103**, a decoder **104**, a size change processor **105**, an audio signal processor **109**, a speaker **110**, a transmitting signal forming section **111**, a transmitting processor **112**, a touch panel **121**, and a coordinate detector **122**.

The respective sections of the display device **100** according to this embodiment are controlled by a controller **130**. The controller **130** is a microcomputer having a CPU (central processing unit) **131**, a ROM (read only memory) **132**, a RAM (random access memory) **133**, and an EEPROM (electrically erasable programmable ROM) **134** connected to each other through a CPU bus **135**, as shown in FIG. **2**.

The ROM **132** has various processing programs that are executed in the display device **100** of this embodiment and data necessary for processing recorded therein. The RAM **133** is mainly used as an operation area of the various processing, for example, temporarily stores and holds data obtained in the various processing.

The EEPROM **134** is made up of a so-called nonvolatile memory that does not lose information stored and held even if a power supply turns off. For example, the EEPROM **134** can store and hold various setting parameters, a web page on the Internet which is acquired through the base device **200**, and an e-mail that is transmitted or received through the base device **200**.

First, the operation of the display device **100** at the time of receiving a radio signal from the base device **200** will be described. In this embodiment, a radio communication is conducted between the display device **100** and the base device **200**, for example, by using a protocol of an IEEE (institute electrical and electronics engineers) 802.11 system, or a protocol such as its developed protocol.

The radio signal from the base device **200** which conforms to a predetermined communication protocol is received by the transmitting and receiving antenna **101** of the display **100**. The radio signal is then supplied to the receiving processor **103** through the antenna shared section **102** (hereinafter simply referred to as "shared section"). The shared section **102** prevents the transmitting signal and the received signal from interfering with each other.

That is, the display device **100** can receive the signal from the base device **200** through the transmitting and receiving antenna **101**, and can also transmit the operation signal from the display device **100** through the transmitting and receiving antenna **101** by radio as will be described later. For that reason, the shared section **102** prevents the transmitting signal from the transmitting processor **112** from interfering with the received signal that is received through the transmitting and receiving antenna **101**.

The receiving processor **103** demodulates the signal supplied thereto, and then supplies the signal that has been demodulated to the decoder (extending processor) **104**. As described above, the base device **200** compresses an information signal such as a video signal or an audio signal of a television program which is tuned in to by its tuner, or display data such as text data or video data or audio data which is received through its communication processor, or the video signal or the audio signal of the contents from the DVD device **300**. The receiving processor **103** then transmits the compressed information data.

For that reason, upon receiving the received signal that has been demodulated from the receiving processor **103** and compressed, the decoder **104** of the display device **100** separates the video signal and the audio signal, and extends the separated signals (decompression), to thereby restore the original signal before data compression. Then, the decoder **104** supplies the display signal such as the restored video signal (digital video signal) to the size change processor **105**, and supplies the restored audio signal (digital audio signal) to the audio signal processor **109**.

The size change processor **105** reduces the size of the image to be displayed under the control from the controller **130** in the case where the operation display information such as the control panel CP is displayed as will be described later. In the case where the control panel CP is not displayed, a process of reducing the image is not conducted for displaying the image on the entire display screen of the LCD **108**, and the image that displays the image having the normal size is outputted.

More specifically, in the case where the control panel CP is displayed, the size change processor **105** thins out the digital video signal, reduces the size of the image corresponding to the supplied digital video signal, and forms a digital video signal for displaying the reduced image at a desired position of the LCD **108** under the control from the controller **130**. The digital video signal is converted into an analog video signal in the size change processor **105**, and then supplied to the OSD processor **106**.

In the case where the operation display information such as the control panel CP is not displayed, it is unnecessary to reduce the main display information to be displayed. Therefore, the size change processor **105** converts the digital video signal supplied thereto into an analog video signal, and then supplies the analog video signal to the OSD processor **106**.

The OSD processor **106** forms an analog video signal for displaying the control panel CP described above with reference to FIG. **1**, various messages or various guidance displays according to data that is supplied from the controller **130**. The OSD processor **106** then combines the analog video signal with the video signal from the size change processor **105**. That is, the OSD processor **106** is a so-called text/graphic

processor circuit for displaying auxiliary display information such as characters, graphics or symbols other than the main display information.

The video signal combined in the OSD processor **16** is supplied to the video signal processor **107**. In the case where it is unnecessary to combine the auxiliary display information such as the control panel CP, no display information is supplied to the OSD processor **106**. Therefore, the analog video signal from the size change processor **105** is supplied to the video signal processor circuit **107** as it is.

The video signal processor **107** forms a signal that is supplied to the LCD **108** according to the video signal that is supplied through the OSD processor **106**, and then supplies the signal to the LCD **108**. As a result, an image corresponding to the video signal that has been transmitted from the base device **200** by radio is displayed on the display screen of the LCD **108**. In this case, in the case where the auxiliary display information such as the control panel CP is combined in the OSD processor **106**, the display information such as the control panel CP is displayed together with the main display information that is reduced in the size change processor **105**.

That is, the video signal of the main display information which has been reduced in the size change processor **105** is combined with the auxiliary display information such as the control panel CP which has been formed according to the information from the controller **130** in the OSD processor **106**. As shown in the LCD **108** of the display device **100** in FIG. **1**, for example, the record history information of the DVD as the reduced main display information and the control panel CP can be combined together and displayed so as not to overlap with each other.

On the other hand, the audio signal amplifier **109** amplifies an audio signal supplied thereto to a predetermined level, and then supplies the audio signal to the speaker **110**. As a result, a voice corresponding to the audio signal that has been transmitted from the base device **200** by radio sounds from the speaker **110**.

As described above, the display device **100** receives the video signal and the audio signal which are transmitted from the base device **200** by radio, and reproduces and outputs the received video signal and audio signal for supplying to the user.

Now, a description will be given of the operation of the display device **100** in the case where the control panel is displayed on the LCD **108** of the display device **100** to receive the operation input from the user, and the operation signal corresponding to the operation input is transmitted to the base device **200**. In this example, as shown in FIG. **1**, the control panel CP for controlling the DVD device **300** is displayed to receive the operation input with respect to the DVD device **300** will be described.

As described above, the touch panel is attached onto the LCD **108** of the display device **100** according to this embodiment. In a state where the display device **100** is powered on and the control panel CP is not displayed, when the user' finger touches the touch panel **121**, the coordinate detector **122** detects the touch position (coordinate position) of the finger on the touch panel **121**, and then notifies the controller **130** of the touch position.

In a state where the control panel is not displayed, when the controller **130** is notified of the touch position by the coordinate detector **122**, the controller **130** judges that the notification is the display instruction of the control panel. In this embodiment, in order to first display the control panel CP for the DVD device **300**, the controller **130** reads necessary information from the ROM **132**, forms information for displaying the control panel CP, and supplies the information to the OSD processor **106**.

In addition, as described above, the controller **130** reduces the main display information in order to display it on the control panel CP, and instructs the formation of the video signal for displaying the main display information at a predetermined position on the display screen to the size change processor **105**.

As described above, in accordance with the control from the controller **130**, the size change processor **105** thins out the video signals from the decoder **104** to form the video signal for reducing and displaying the main display information corresponding to the video signal, and supplies the video signal to the OSD processor **106**.

Upon receiving the information from the controller **130**, the OSD processor **106** forms the video signal for displaying the control panel CP, and combines the video signal with a video signal for displaying the main display information to be reduced by the size change processor **105**. As a result, the OSD processor **106** displays the main display information MG and the control panel CP on the display screen of the LCD **108** so as not to overlap the display area of the main display information MG with the display area of the control panel CP as shown in FIG. **1**.

Then, when the user's finger touches a position on the touch panel **121** where an intended operation key of the control panel CP which is displayed on the display screen of the LCD **108** is displayed, the touch position is detected by the coordinate detector **122**, and then the controller **130** is notified of it. The controller **130** discriminates the operation key of the control panel CP which is displayed at the touch position on the touch panel **121** from the coordinate detector **122**, forms an operation signal corresponding to the operation key and supplies the operation signal to the transmitting signal forming section **111**.

The transmitting signal forming section **111** forms a transmitting signal to be transmitted to the base device **200** according to the operation signal from the controller **130**, and then supplies the transmitting signal to the transmitting processor **112**. The transmitting processor **112** modulates and amplifies the supplied transmitting signal to form a transmitting signal of a format that is actually transmitted, and transmits the transmitting signal to the base device **200** through the shared section **102** and the transmitting and receiving antenna **101** by radio.

In this manner, the operation signal that is transmitted from the display device **100** by radio is received by the base device **200**. Then, in this example, in the base device **200**, a remote control signal for the DVD device **300** is formed according to the operation signal from the display device **100**, and then transmitted to the DVD device **300** so as to remotely control the DVD device **300**.

Also, the display device **100** according to this embodiment is connected with a key input section **141** through an interface **140** (I/F in FIG. **2**). The key input section **141** has, for example, an on/off switch of a power supply. The operation input that has been received through the key input section **141** is supplied to the controller **130** through the I/F **140**, and the controller **130** executes processing such as power-on according to the operation key.

In this example, the description is given of a case in which the operation signal is transmitted to the DVD device **300** through the control panel CP for the DVD device **300**. However, the base device **200** can also be remotely controlled by means of the display device **100** as with the DVD device **300**.

That is, in the case of remotely controlling the base device **200** through the display device **100**, the control panel for the base device **200** is displayed on the display device **100**. The control device switchably displays the device to be controlled.

As will be described later, the base device **200** judges whether the operation signal from the display device **100** is intended for the base device **200** or for the external input device such as the DVD device **300** which is connected to the base device **200**. When the operation signal is intended for the external input device, the base device **200** transmits the operation signal to the external input device as described above.

When the operation signal from the display device **100** is intended for the base device **200**, the base device **200** is controlled by itself according to the operation signal. As a result, the analog terrestrial television signal in the base device **200** is tuned in to through the display device **100**, or the information is transferred through the communication processor of the base device **200**.

[Base Device **200**]

Now, the base device **200** shown in FIG. **1** will be described in more detail. FIG. **3** is a block diagram for explaining the base device **200** according to this embodiment. As shown in FIG. **3**, the base device **200** includes a tuner **202** that is connected to a receiving antenna **201** of the analog terrestrial television signal which is located outdoor, a demodulator **203**, an input terminal **204** of the video signal (Vd), an input terminal **205** of the audio signal (Au), a selector **206**, a compression processor **207**, a transmitting signal forming section **208**, a transmitting processor **209**, and an antenna shared section (hereinafter simply referred to as "shared section") **210**, a transmitting and receiving antenna **211** and a receiving processor **212**.

The respective sections of the base device **200** according to this embodiment are controlled by a controller **230**. The controller **230** is a microcomputer that is made up of a CPU **231**, a ROM **232**, a RAM **233**, and an EEPROM **234** through a CPU bus **235** as shown in FIG. **3**.

In this example, the ROM **232** has various processing programs that are executed in the base device **200** of this embodiment and data necessary for processing recorded therein. The RAM **233** is mainly used as an operation area of the various processing, for example, temporarily stores and holds data obtained in the various processing.

The EEPROM **234** is made up of a so-called nonvolatile memory that does not lose information stored and held even if a power supply turns off. For example, the EEPROM **234** can realize a so-called last channel memory function that stores and holds the information on a broadcast channel which has been tuned in to immediately before the power supply of the base device **200** has turned off, and tunes in to a broadcast signal of the channel that has been tuned in to immediately before the power supply has turned off after the power supply turns on.

Also, the controller **230** is connected with a communication processor **220**. The communication processor **220** is made up of an interface (hereinafter referred to as "I/F") section **221**, and a communication section **222**. The I/F section **221** is an interface between a communication line, that is, a telephone line in this embodiment and the base device **200**. The I/F section **221** receives a signal that is transmitted through the telephone line and transmits a signal from the base device **200** to the telephone line.

The communication section **222** demodulates the signal that has been received through the I/F section **221** and supplies the signal to the controller **230**. The communication section **222** also modulates the transmitting signal from the controller **230** and supplies the transmitting signal to the I/F section **221**. As a result, the communication section **222** can transmit and receive various data with respect to a third party to which the telephone line is connected.

The base device **200** according to this embodiment is connected to the Internet through the communication processor **220**, a telephone line L and a predetermined ISP (Internet service provider) so as to receive various information, and transmit and receive an e-mail through the Internet.

For that reason, the controller **230** controls the communication processor **220** so as to conduct on-hook or off-hook. The controller **230** has a function of a so-called dialer that transmits a dial signal to the telephone line when the controller **230** controls the communication processor **220** so as to conduct the off-hook.

Also, the controller **230** is connected with a remote control signal transmitter **250** through a remote control signal forming section **241**, an output terminal **242** of the remote control signal. The controller **230** is so designed as to form the remote control signal according to the operation signal from the display device **100** and send the remote control signal as described above.

Although being not shown, the controller **230** is connected with a key input section having an on/off key of the power supply and various setting keys provided therein so as to conduct the on/off operation of a main power supply for the base device **200** and various setting inputs through the key input section.

Then, in this embodiment, the tuner **202** of the base device **200** is supplied with a television signal that has been received by the receiving antenna **201** as shown in FIG. **3**. The tuner **202** tunes into the television signal among the television signals from the receiving antenna **201** according to a tuning instruction signal from the controller **230**, and then supplies the tuned television signal to the demodulator **203**. The demodulator **203** demodulates the television signal supplied thereto, and supplies a modulated signal (television program signal) to the selector **206**.

The selector **206** is supplied with the video signal that is inputted through the external input terminal **204** of the video signal, the audio signal that is inputted through the external input terminal **205** of the audio signal as well as the information from the controller **230**. The information that is supplied to the selector **206** from the controller **230** is information of a so-called web page which is taken in through the communication processor **220**, for example, which is published on the Internet, or information of e-mail.

The selector **206** switches over whether a signal from the demodulator **203** is outputted; a signal from the external input terminals **204** and **205** is outputted, or a signal from the controller **230** is outputted, according to a switch control signal from the controller **230**. The switch control signal that is supplied to the selector **206** from the controller **230** is formed in the controller **230** according to the operation signal that is transmitted from the display device **100** by radio as described above.

An output signal from the selector **206** is supplied to the compression processor **207**. The compression processor **207** compresses the signal supplied thereto by using a predetermined compression system. In the compression processor **207**, the signal from the selector **206** is compressed by, for example, using the data compression system such as the MPEG system or the Wavelet system.

The signal that has been compressed in the compression processor **207** is supplied to the transmitting signal forming section **208**. The transmitting signal forming section **208** forms a transmitting signal that conforms to a predetermined

communication protocol. As described above, in this embodiment, the base device **200** forms a transmitting signal that conforms to, for example, a protocol of the IEEE802.11 system or its developed protocol.

The transmitting signal that has been compressed in the compression processor **207** is supplied to the transmitting processor **209**. The transmitting processor **209** modulates or amplifies the transmitting signal according to the control signal from the controller **230**. The transmitting signal that has been processed in the transmitting processor **209** is transmitted through the shared section **210** and the transmitting and receiving antenna **211**. The shared section **210** prevents the transmitting signal from interfering with the receiving signal as with the shared section **102** of the display device **100** shown in FIG. **2**.

The video signal and the audio signal of the television program which has been tuned in to by the tuner **202**, the video signal and the audio signal that have been received through the external input terminals **204** and **205**, or text data, the video data and the audio data of the information that has been acquired through the communication processor **220** are compressed and transmitted by a predetermined communication protocol by radio. Thus, those signals or data can be supplied to the display device **100**.

Subsequently, the operation of the base device **200** in the case of receiving the operation signal that is transmitted from the display device **100** by radio will be described. The operation signal from the display device **100** which has been received through the transmitting and receiving antenna **211** is supplied to the receiving processor **212** through the shared section **210**. The receiving processor **212** demodulates the signal supplied thereto, subjects the signal to analog/digital conversion into a signal that can be treated by the controller **230**, and supplies the signal to the controller **230**.

When the signal from the receiving processor **212** is an operation signal for the external input device, that is, the DVD device **300** in this embodiment, the controller **230** controls to supply the received operation signal to the remote control signal forming section **241** and form the remote control signal according to the received operation signal.

The remote control signal forming section **241** forms a remote control signal that is supplied to the DVD device **300** which is an external input device on the basis of a signal from the controller **230**. The remote control signal forming section **241** then supplies the remote control signal to the remote control signal transmitter **250** through an output terminal **242** of the remote control signal which is connected to the remote control signal transmitter **250** in this embodiment.

The remote control signal transmitter **250** transmits the remote control signal from the remote control signal forming section **241** as an infrared remote control signal. In this manner, the remote control signal transmitter **250** transmits the operation signal for the DVD device **300** from the display device **100** as the infrared remote control signal so as to remotely control the DVD device **300**.

Also, when the signal from the receiving processor **212** is an operation signal for itself, that is, the base device **200**, the controller **230** controls the respective sections according to the received operation signal. As a result, the controller **230** can change tuning by means of the tuner **201**, or switch over the signal outputted from the selector **206**.

Also, when the signal from the receiving processor **212** is a request for acquiring an intended web page, a request for receiving e-mail, or a request for transmitting the e-mail, the controller **230** controls the communication processor **220**, and connects a telephone line with respect to a subscribed ISP to connect with the Internet. Then, the controller **230** can acquire the intended web page, receive the e-mail addressed to self, or transmit the e-mail to an intended third party.

In this manner, the base device **200** according to this embodiment receives, tunes in to and demodulates the television signal, and receives and demodulates the demodulated video signal and audio signal of the television program, the video signal and audio signal that are supplied from the external input device through the external input terminals **204** and **205**, video data and audio data which receive, or video data and audio data which are received through the communication processor **220** and the telephone line. The base device **200** then compresses the demodulated video data or audio data, and transmits the compressed data according to a predetermined communication protocol by radio.

In addition, the base device **200** according to this embodiment receives the operation signal that is transmitted from the display device **100** by radio, and forms and transmits a remote control signal for controlling itself or the external input device according to the operation signal. Also, the base device **200** transmits the transmission information such as an e-mail which is transmitted from the display device **100** by radio through the communication processor **220** according to the operation signal.

[DVD Device **300**]

Now, a description will be given of the DVD device **300** which is the external input device that is connected to the base device **200** in this embodiment as shown in FIG. **1**. FIG. **4** is a block diagram for explanation of the DVD device **300**.

As shown in FIG. **4**, the DVD device **300** according to this embodiment includes an input and output system of a digital, signal having a digital input and output terminal **301** and a digital interface **302**, an input system of an analog signal having a terrestrial tuner **303** to a synchronous control circuit **316**, an output system of the analog signal having an MPEG audio decoder **320** to an output terminal **329** of a separate video signal, a multiplex and separation circuit **317**, a buffer control circuit **318**, a DVD drive **319**, and a controller **340**.

In FIG. **4**, the controller **340** controls the entire DVD device **300**, and is formed of a microcomputer having a CPU **341**, a ROM **342**, a RAM **343** and an EEPROM **344** connected to each other through a bus.

Also, as shown in FIG. **4**, the controller **340** is connected with a photoreceiver **345** of an infrared remote control signal. The photoreceiver **345** optically receives the infrared remote control signal to the controller **340** from the external, converts the received signal into an electric signal, and then supplies the electric signal to the controller **340**. With this structure, the controller **340** controls the respective sections according to the received remote control signal, and conducts) various setting, for example, with respect to the EEPROM **344**.

The ROM **342** has various processing programs that are executed in the DVD device **300** of this embodiment and data necessary for processing recorded therein. The RAM **343** is mainly used as an operation area, for example, temporarily stores results during processing. Also, the EEPROM **344** is made up of a so-called nonvolatile memory for storing and holding data to be held even if a power supply turns off, for example, various setting data.

[Application of Digital Input]

Then, a description will be given of the operation of the DVD device **300** according to this embodiment in the case of receiving information through the respective input terminals. First, a description will be given of processing in the case of recording, in the DVD, a TS (transport stream) signal in which a digital video signal, a digital audio signal and a

control signal which are supplied through the digital input and output terminal **301** are brought into a packet and multiplexed in time division.

The TS signal (digital signal) that is received through the digital input and output terminal **301** from another external device such as the STB is supplied to the digital interface circuit **302**. The digital interface circuit **302** conducts format conversion on the supplied TS signal so that the TS signal complies with a system that is used by the DVD device **300** according to this embodiment. The digital interface circuit **302** then supplies the converted TS signal to the multiplex and separation circuit **317**.

The multiplex and separation circuit **317** further analyzes and generates the control signal, forms the TS signal (TS signal of the format which is recorded in the DVD loaded in the DVD drive **319**) including the control signal, and records the TS signal in the DVD loaded in the DVD drive **319** through the buffer control circuit **318**.

Also, the multiplex and separation circuit **317** separates the video data (video ES (elementary stream)) and the audio data (audio ES (elementary stream)) from the TS signal which is supplied from the digital interface circuit **302**, and then supplies those data to the MPEG (moving picture experts group) video decoder **324** and the MPEG audio decoder **320**.

The MPEG audio decoder **320** decodes the supplied audio data, obtains the audio data of a base band, and supplies the audio data to a post audio signal processor circuit **321**. The MPEG video decoder **324** decodes the supplied video data, obtains the video data of a base band, and supplies the video data to a post video signal processor circuit **325**.

The post video signal processor circuit **325** switches over between the video data from the MPEG video decoder **324** and the video data from a pre video signal processor circuit **314** that will be described later, conducts screen combination or filtering, and supplies the video data that has been processed to an OSD circuit **326**.

The OSD circuit **326** generates graphics and character data for screen display, processes the video data that has been supplied to the OSD circuit **326** so as to overlap the generated graphics and character data on each other or partially display the generated graphics and character data, and then supplies the video data that has been processed to an NTSC encoder **327**.

After converting the inputted video data (component digital video signal) into a YC signal, the NTSC encoder **327** conducts D/A conversion, generates an analog composite video signal and an analog separate video signal S, and outputs the composite video signal C through an output terminal **328** and the separate video signal through an output terminal **329**, respectively.

On the other hand, the post audio signal processor circuit **321** switches over between the audio data from the MPEG audio decoder **320** and the audio data from pre audio signal processor circuit **309**, conducts a filtering process, a fading process, and a talking speed converting process, and then supplies the processed audio data to an audio D/A converter **322**. The audio D/A converter **322** converts the supplied audio data into an analog audio signal, and then outputs the converted audio signal through an output terminal **323** of the analog audio signal.

The audio signal and the video signal are supplied to the base device **200** from the analog audio output terminal **323** and the analog video output terminals **328** and **329**.

[Application of Analog Input]

Now, a description will be given of the operation in the case of inputting the analog signal through the terrestrial tuner **303**, the analog audio input terminal **304** and the analog vide input terminals **305**, **306**, recording the inputted analog signal in the DVD loaded in the DVD driver **319**, or outputting the analog signal.

The terrestrial tuner **303** receives, tunes and demodulates the analog terrestrial broadcast signal, obtains the analog video signal (composite signal) and the analog audio signal, and then supplies those signals to an input switch circuit **307**. Also, the input switch circuit **307** also receives the analog audio signal that is supplied through the analog audio input terminal **304** and the composite vide signal C that is supplied through the analog video input terminal **305**.

The input switch circuit **307** selects and outputs an intended signal according to the control signal from the controller **340**. That is, the input switch circuit **307** switches over outputting the analog video signal and the analog audio signal from the terrestrial tuner **303**, or outputting the analog audio signal and the analog video signal from the analog audio input terminal **304** and the analog video input terminal **305**.

The analog audio signal among the signals that are outputted from the input switch circuit **307** is supplied to an analog/digital converter (hereinafter referred to as "A/D converter") **308**. The analog video signal (composite signal) is supplied to a YC separation circuit **311**. The YC separation circuit **311** separates the supplied analog video signal into Y and C, that is, into a brightness signal and a color difference signal, and then supplies those signals to an input switch circuit **312**. The input switch circuit **312** is also supplied with a separate video signal S from the external.

The input switch circuit **312** selects one of the separate video signal S from the external and the video signal from the YC separate circuit **311** according to an instruction from the controller **340**, and then supplies the selected video signal to an NTSC (national television system committee) decoder circuit **313**.

The NTSC decoder circuit **313** conducts the analog/digital conversion (hereinafter referred to as "A/D conversion") and chromatic decoding on the inputted analog video signal, converts the signal into a digital component video data (video data), and then supplies the converted data to the pre video signal processor circuit **314**. Also, the NTSC decoder **313** supplies a clock that is generated with reference to a horizontal synchronous signal of the inputted video signal, and a horizontal synchronous signal, a vertical synchronous signal and a field discrimination signal which are obtained by synchronous separation to the synchronous control circuit **316**.

The synchronous control circuit **316** generates a clock signal and a synchronous signal which provide timing required by the respective circuit blocks with reference to the respective supplied signals. The synchronous control circuit **316** then supplies those signals to the respective circuits that require those signals.

The pre video signal processor circuit **314** subjects the inputted video data to various video signal processing such as pre-filtering, and the processed video data to the MPEG video encoder **315** and the post video signal processor circuit **325**.

The MPEG video encoder **315** subjects the video data from the pre video signal processor circuit **314** to an encoding process such as block DCT (discrete cosine transform) to generate a video ES, and then supplies the video ES to the multiplex and separation circuit **317**.

On the other hand, the audio signal that has been selected by the input switch circuit **307** is supplied to the pre audio signal processor circuit **309** after having been converted into a digital audio signal (audio data) by the A/D converter **308**. The pre audio signal processor circuit **309** subjects the supplied audio data to filtering, and then supplies the filtered audio data to the MPEG audio encoder **310**.

After compressing the supplied audio data according to the MPEG format, the MPEG audio encoder **310** generates an audio ES and then supplies the audio ES to the multiplex/separation circuit **317** as in the video data.

The multiplex and separation circuit **317** multiplexes the video ES from the MPEG video encoder **315**, the audio ES from the MPEG audio encoder **310**, and various control signals during recording. In other words, during recording, the multiplex and separation circuit **317** combines and multiplexes the inputted MPEG video ES, MPEG audio ES and various control signals, and generates, for example, the TS signal of the MPEG system. The TS signal that is generated in the multiplex and separation circuit **317** is recorded in the DVD loaded in the DVD drive **319** through the buffer control circuit **318**.

Also, as shown in FIG. **4**, the audio data from the pre audio signal processor circuit **309** is also supplied to the post audio signal processor circuit **321**. The video data from the pre video signal processor circuit **314** is also supplied to the post video signal processor circuit **325**.

Then, the post audio signal processor circuit **321** and the D/A converter **322** function to form and output the analog audio signal. The post video signal processor circuit **325**, the OSD circuit **326** and the NTSC encoder **327** function to form and output the analog video signal.

That is, the video data and the audio data to be recorded can be reproduced and outputted while the analog signal that is supplied through the terrestrial tuner **303**, the analog audio input terminal **304** and the analog video input terminals **305**, **306** is converted into a digital signal, and then recorded in the DVD loaded in the DVD drive **319**.

Otherwise, it is possible that the signals from the terrestrial tuner **303**, the analog audio input terminal **304** and the analog video input terminals **305** and **306** are converted into digital signals and then outputted as digital signals to the external device through the digital interface **302** and the digital input and output terminals **301**.

[Reproduction of Data from the DVD Loaded in the DVD Drive **319**]

Subsequently, a description will be given of the operation of the DVD device **300** in the case of reproducing the video signal and the audio signal that have been recorded in the DVD loaded in the DVD drive **319** in the above manner. An intended TS signal to be reproduced from the DVD loaded in the DVD drive **329** is read and then supplied to the multiple and separation circuit **317** through the buffer control circuit **318** under the control from the controller **340**.

During reproduction, the multiplex and separation circuit **317** separates the video ES and the audio ES from the TS signal read from the DVD loaded in the DVD drive **319**. Then, the multiplex and separation circuit **317** supplies the separated audio ES to the MPEG audio decoder **320**, and supplies the separated video ES to the MPEG video decoder **324**.

The processing in the respective circuits subsequent to the MPEG audio decoder **320** and the processing in the respective circuits subsequent to the MPEG video decoder **324** are described in the case of using the digital input. That is, the analog audio signal is formed and outputted from the audio ES that has been supplied to the MPEG audio decoder **320**, and the analog video signal is formed and outputted from the video ES that has been supplied to the MPEG video decoder **324**.

As a result, the audio signal and the video signal which are outputted through the analog audio output terminal **323** and the analog video output terminals **328** and **329** can be supplied to the base device **200**.

Otherwise, it is possible that the digital video signal and the digital audio signal which are read from the DVD loaded in the DVD drive **319** are outputted through the digital interface **302** and the digital input and output terminal **301**, and then supplied to an external device.

In this embodiment, the video data and the audio data are compressed in the MPEG system. However, it is possible to use another compression system, or it is possible to process the video data and the audio data which remain uncompressed without being compressed.

As described above, the DVD device **300** used in this embodiment can read and decode the data of intended contents which have been recorded in the DVD loaded in the DVD drive **319**, and supply the decoded data to the base device **200** as the analog video signal and the analog audio signal.

It is also possible that the remote control signal that has been transmitted from the remote control commander signal transmitter (remote control mouse) which is connected to the base device **200** is optically received by the photoreceiver **345** to conduct processing according to the remote control signal from the base device **200**. In this case, the remote control signal that is transmitted from the remote control signal transmitter **250** of the base device **200** corresponds to the control signal from the display device **100**, as described above.

Accordingly, when the user of the display device **100** operates the display device **100**, the operation signal is transmitted to the base device **200** from the display device **100**. Also, the remote control signal for the DVD device **300** is formed from the operation signal in the base device **200**, and then transmitted to the DVD device **300**. The DVD device **300** conducts processing according to the remote control signal.

[Processing in the Respective Devices in the Case of Remotely Controlling the DVD Device **300**]

Subsequently, a description will be given of the respective processing of the display device **100**, the base device **200** and the DVD device **300** in the case of remotely controlling the DVD device **300** through the control panel CP that is displayed on the LCD **108** of the display device **100** with reference to flowcharts of FIGS. **5** to **8**.

[Processing of the Display Device **100**]

Subsequently, FIGS. **5** and **6** are flowcharts for explaining the processing that is executed in the controller **130** of the display device **100** after a power supply of the display device **100** turns on. As shown in FIG. **5**, upon turning on the power supply, the controller **130** of the display device **100** monitors a detection output from the coordinate-detector **122**, judges whether a touch of the user on the touch panel **121** is detected, or not (Step S**1**), and gets a standby state until the touch on the touch panel **121** is detected.

In the judging process of Step S**1**, when the touch on the touch panel **121** is detected, the controller **130** controls the size change processor **105** so as to reduce the video signal from the decoder **104** so that the main display information to be displayed on the display screen of the LCD **108** according to the video signal does not overlap with the control panel CP as described above (Step S**2**).

In addition, the controller **130** in this embodiment controls to supply, to the OSD processor **106**, data for displaying the control panel CP for the DVD **300**, and combine the video signal from the size change processor **105** and video signal for displaying the control panel CP, and displays the control panel CP on the display screen of the LCD **108** (Step S**3**).

In the processing up to Step S**3**, as shown in FIG. **1**, the main display information which is an image to be reduced which is derived from the video signal transmitted from the base device **200** and the control panel CP are so displayed as

not to overlap the respective display contents with each other on the display screen of the LCD **108**.

The controller **130** of the display device **100** accepts the touch on the displayed control panel by the user, and gets in a standby state until the control panel CP is touched by the user (Step S**4**). In the judging process of Step S**4**, when it is judged that the operation input from the user is accepted, the controller **130** specifies the operation key of the control panel that is displayed at a touch position on the basis of the detection output from the coordinate detector **122** (Step S**5**.

Then, the controller **130** of the display device judges whether or not the specified operation key is intended for the external, that is, is intended for the base device **200** or the DVD device **300** (Step S**6**). In the judging process of Step S**6**, when the specified operation key is intended for the external, the controller **130** forms an operation signal according to the specified operation key (Step S**7**), and then transmits the operation signal to the base device **200** through the transmitting signals forming section **111**, the transmitting processor **112**, the shared section **102** and the transmitting and receiving antenna **101** by radio (Step S**8**). Then, the processing from Step S**4** is repeated, and the controller **130** accepts the operation input from the user through the control panel.

In the judging process of Step S**6**, when it is judged that the operation key specified in Step S**5** is not intended for the external, that is, the operation key to be treated in the display device **100**, the processing is advanced to processing shown in FIG. **6** where it is judged whether or not the specified operation key instructs the erasing of the control panel (Step S**9**).

In the judging process of Step S**9**, it is judged that the specified operation key instructs the erasing of the control panel. In this case, the main display information is changed in size, and the thinning process of the video signal is stopped so that the main display information corresponding to the video signal from the base device **200** which is to be reduced and displayed has a normal size (Step S**11**). Then, the processing starting from Step S**1** shown in FIG. **5** is repeated.

In the judging process of Step S**9**, when it is judged that the specified operation key does not instruct the erasing of the control panel, it is judged whether the specified operation key instructs the display of another control panel, or not (Step S**12**). In the judging process of Step S**12**, when it is judged that the specified operation key instructs the display of another control panel, it is judged whether a change in the size of the display image is required, or not (Step S**13**).

The judging process of Step S**13** is a process of judging whether a change in the size of the main display information is necessary or not, because the control panel to be newly displayed is different in size from the control panel that has been already displayed. In the judging process of Step S**13**, when it is judged that a change in the size of the main display information is necessary, the controller **130** controls the size change processor **105** to conduct a reducing process or an enlarging process so that the size of the main display information meets the control panel to be newly displayed (Step S**14**).

The controller **130** supplies information for displaying the control panel which is instructed from the user to the OSD processor **106**, and displays the main display information and the new control panel so as not to overlap their display areas with each other (Step S**15**). Then, the controller **130** repeats the processing starting from Step S**4** shown in FIG. **5**.

In the judging process of Step S**12**, when it is judged that the display of another control panel is not instructed, the controller **130** executes another processing in the display device **100**, for example, a change in the display position of the cursor (Step S**16**), and repeats the processing starting from Step S**4** shown in FIG. **5**.

As described above, the display device **100** according to this embodiment displays the control panel for accepting the operation input on the LCD **108**, and accepts the operation input from the user by using the control panel display, the touch panel **121** that is attached onto the display screen of the LCD **108**, and the coordinate detector **122**. Then, the display device **100** forms the operation signal according to the accepted operation input, and transmits the operation signal to the base device **200**.

Then, even in the case where the control panel is displayed, the size and the display position of the main display information derived from the video signal from the base device **200** are adjusted according to the size and the display position of the displayed control panel. Therefore, the main display information and the control panel are so displayed as not to overlap with each other, and it is not hard to see the main display information by the control panel.

[Processing in the Base Device **200**]

Subsequently, a description will be given of processing in the base device **200** that receives the operation signal that is transmitted from the display device **100** by radio with reference to a flowchart of FIG. **7**. The processing shown in FIG. **7** is a process to be executed in the controller **230** of the base device **200** after a main power supply turns on in the base device **200**.

Upon turning on the main power supply of the base device **200**, the base device **200** monitors an output signal from the receiving processor **212**, and judges whether or not the receiving processor **212** receives the operation signal from the display device **100** (Step S**21**). In the judging process of Step S**21**, when it is judged that the operation signal from the display device **100** is not received, the processing starting from Step S**21** is repeated.

In the judging process of Step S**21**, when it is judged that the operation signal from the display device **100** is received, the controller **230** of the base device **200** judges whether or not the operation signal from the display device **100** is intended for the base device **200** (Step S**22**).

In the judging process of Step S**22**, when it is judged that the operation signal from the display device **100** is intended for the base device **200**, the controller **230** of the base device **200** executes the processing according to the operation signal received from the display device **101** (Step S**23**). The controller **230** then controls the tuner **202** to change a broadcast signal to be tuned into or conduct the switch operation of the selector **206**. Then, the processing starting from Step S**21** is repeated. In this manner, the base device **200** can be remotely controlled by using the display device **100**.

Also, in the judging process of Step S**22**, when it is judged that the operation signal from the display device **100** is not intended for the base device **200**, the controller **230** controls the remote control signal forming section **241**, and then forms the remote control signal according to the operation signal received from the display device **100** (Step S**24**).

The remote control signal formed in Step S**24** is supplied to the remote control signal transmitter **250** through the output terminal **242** of the remote control signal of the base device **200**. Then, the remote control signal is transmitted to the DVD device **300** that is an external input device as an infrared remote control signal (Step S**25**). As a result, the DVD device **300** can be remotely controlled through the base device **200** by means of the display device **100**.

[Processing in the DVD Device **300**]

Subsequently, a description will be given of the processing in the DVD device **300** that optically receives an infrared

remote control signal transmitted from the remote control signal transmitter **250** of the base device **200** with reference to a flowchart of FIG. **8**. The processing shown in FIG. **7** is a process that is executed in the controller **340** of the DVD device **300** in the case where the DVD device **300** turns on.

The controller **340** of the DVD device **300** judges whether or not the photoreceiver **345** of the remote control signal optically receives a remote control signal addressed to the DVD device **300** (Step S**31**). In the judging process of Step S**31**, when the controller **340** judges that the remote control signal addressed to the DVD device **300** is not optically received, the controller **340** returns the control to the processing of Step S**31**, and waits for the reception of the remote control signal addressed to the DVD device **300**.

In the judging process of Step S**31**, when the controller **340** judges that the remote control signal addressed to the DVD device **300** is optically received, the controller **340** of the DVD device **300** forms a control signal according to the remote control signal addressed to the DVD device **300** (Step S**32**). The controller **340** then supplies the control signal to the respective related sections, to thereby conduct processing according to the received remote control signal (Step S**33**).

As described above, in the two-way communication system according to this embodiment, the image and the voice corresponding to the video signal and the audio signal from the base device **200** can be observed and heard by means of the display device **100**. In addition, in the two-way communication system according to this embodiment, the base device **200** can be remotely controlled by using the display device **100**. Also, the DVD device **300** can be remotely controlled through the base device **200** by using the display device **100**. That is, the display device **100** has both of a function of a monitor receiver and a function of a remote controller.

In this embodiment, the base device **200** is connected with the DVD device **300** as shown in FIG. **1**. However, the present invention is not limited to this structure. As described above, the base device **200** can be connected with not only the DVD device **300** but also various external input devices such as a VTR, an IRD or an STB.

Also, as shown in FIG. **9**, the base device **200** can be connected with a plurality of external input devices such as the DVD device **300**, the VTR **400**, or a BS digital tuner **500** by provision of a plurality of external input terminals. In this case, the plurality of external input terminals are connected to the selector **206** of the base device **200** shown in FIG. **3**, so as to be switchable under the control of the controller **230**.

As shown in FIG. **9**, in the case where a plurality of external input devices are connected to the base device **200**, the control panel corresponding to the external input device that is connected to the base device **200** is displayed on the display screen of the display device **100**.

FIGS. **10**A to **10**C are diagrams for explaining a display example of the control panels corresponding to the plurality of external input devices which are displayed on the display device **100**. FIG. **10**A is a control panel CP for the DVD device **300** which includes various operation keys such as an on/off key of a power supply, arrow keys and a decision key as described above.

FIG. **10**B is a control panel CP**1** for the VTR, which has a pause key, a fast-forward key, a rewind key, a reproduction, key, a stop key, and a record key in correspondence with the on/off key of a power supply and the operation keys of the VTR. Also, FIG. **10**C is a control panel CP**2** for the BS digital tuner, which provides an on/off key of a power supply and numerical keys for channel selection.

In this embodiment, as shown in FIGS. **1** and **10**A to **10**C, the control panel is displayed at a right side of the LCD **108**. When the user's finger repeatedly touches the touch panel other than the display area of the control panel, the control panels corresponding to the base device **200** and the respective external input devices which are connected to the base device **200** can be displayed in a rotation fashion.

More specifically, in the display device **100** according to this embodiment, the control panels are displayed in the rotation fashion, for example, in the order of (1) the control panel CP for the DVD device, (2) the control panel CP**1** for the VTR **200**, (3) the control panel CP**2** for the BS digital tuner **400**, (4) control panel erasing, and (5) the control panel for the DVD device.

In this case, as described above, the control panel for the base device **200** which has a selector switch key is displayed, and the selector switch key of the control panel is so operated as to switch over the selector **206** of the base device **200** for outputting a signal from an intended external input device. Thereafter, the control panel of the intended external input device is displayed and operated, thereby making it possible to remotely control the intended external input device through the display device **100** and the base device **200**.

As described above, with the use of the control panel that is displayed on the LCD **108** of the display device **100** and the touch panel, the on/off operation of the power supply for the base device **200**, a change of the channel, the switch of the selector **206**, the on/off operation of the power supply for the external input device that is connected to the base device **200**, and other operation controls can be remotely controlled. That is, in the case where the external input device is the VTR or the DVD device, it is possible to conduct the remote control according to the operation keys provided in the respective devices, such as the on/off operation of the power supply, pause, fast-forwarding, rewind, reproduction, stop or record.

The remote control of the base device **200** and the external input device that is connected to the base device **200** is not limited to the above remote control. For example, when the base device **200** and the DVD device **300** are adaptive for bilingual voices (double voices), switching between the main voice and the auxiliary voice can be remotely controlled through the control panel of the display device **100** with the provision of a switch key that switches over between the main voice and the auxiliary voice. Also, in the case where the external input device is the VTR or the DVD device, a reproduction speed adjusting key is disposed on the control panel, thereby making it possible to remotely control the adjustment of the reproduction speed through the control panel of the display device **100**.

As described above, the remote control that is conducted through the control panel displayed on the LCD **108** of the display device **100** can perform various remote control by the provision of various operation keys on the control panel according to the functions of the device to be operated. That is, the base device **200** is used as a so-called gateway, and various source information can be watched on the display device **100**.

Also, in order to smoothly operate a plurality of external input devices, it is possible that the remote control signal transmitters **250** of the same number as that of the external input devices are connected to the base device **200**, and the respective remote control signal transmitters are located in the vicinity of the plurality of external input devices.

As described above, the operation display information for operating the base device **200** and the external input device that is connected to the base device **200** is displayed on the LCD **108** of the display device **100**. Then, the base device **200**

and the external input device that is connected to the base device **200** can be remotely controlled by using the operation display information.

For example, in the case where a digital broadcast receiver such as the STB or the IRD is connected to the base device **200**, the EPG of the digital broadcast which is supplied from the STB or the IRD can be displayed on the entire display screen of the LCD **108** as the main display information, as shown in FIG. **11**A. Also, as shown in FIG. **11**B, the image of the EPG which is the main display information is reduced and displayed, the control panel CP**4** for the STB or the IRD is displayed, and an intended broadcast program is selected from the EPG, thereby making it possible to watch the selected broadcast program.

Even in the case where the EPG of the analog terrestrial broadcast is received from the base device **200** and displayed, the control panel for the base device **200** and the EPG can be so displayed as not to overlap their display areas with each other, likewise.

Also, in the case where a VTR, a DVD device or a hard disc device is connected to the base device **200**, an image derived from the video signal from those devices is displayed on the LCD **108** of the display device **100** as the main display information as shown in FIG. **12**A. In this case, when the control panel for the VTR or the DVD device is going to be displayed, the reproduced image which is the main display information is reduced in size and displayed, and the control panel CP**1** for the VTR and the DVD device is displayed for conducting operation such as reproduction stop, pause, fast forwarding, or fast rewind, as shown in FIG. **12**B.

Otherwise, in the case of displaying an image of the analog terrestrial broadband program from the base device **200**, the control panel for the base device **200** and the image of the broadband program can be so displayed as not to overlap their display areas with each other, likewise.

The base device **200** can be connected with the DVD device, the VTR, the STB, the BS digital tuner that is called "IRD", various reproducing devices, or recording and reproducing devices such as a hard disk device, as described above. The image corresponding to the display signal of the information signal from those devices is displayed on the LCD **108** of the display device **100**. In this event, the present invention can be applied to a case in which various control panels that are the operation display information are displayed.

Also, as understood from the above description, in the above embodiment, the transmitting and receiving antenna **101**, the shared section **102** and the receiving processor **103** in the display device **100** cooperate with each other to realize the function of a receiving means. Also, the controller **130** and the OSD processor **106** realize the function of an operation display processing means, and the controller **130** and the size change processor **105** realize the function of a touch position detecting means. Further, the touch panel **121** and the coordinate detecting means **122** realize the function of a touch position detecting means, and the controller **130** realizes the function of a control means. In addition, the controller **130** realizes the function of a forming means for forming the remote control signal. The transmitting signal forming means **111**, the transmitting processor **112**, the shared section **102**, and the transmitting and receiving antenna **101** cooperate with each other to realize the function of a transmitting means.

In the above embodiment, in the case of displaying the operation display information such as the control panel CP, the image derived from the video signal of the information signal that is supplied from the base device **200**, or the display signal such as the text data is reduced in size. In this case, a reduction ratio can be variously adapted according to the size of the control panel to be displayed together. Accordingly, the reduction ratio can be made different between the longitudinal direction and the lateral direction.

Also, in the case of reducing the image that is derived from the video signal or the display signal such as the text data of the information signal supplied from the base device **200**, a display position of the reduced image on the display screen can be adjusted. For example, it is possible to adjust the position of the main display information which is reduced at an arbitrary position on the display screen such as upper shift, lower shift or centering.

That is, the size change processor **105** of the display device **100** can change not only the change in the display size of the image but also the display position of the reduced image on the display screen.

Also, in this embodiment, when the user's finger repeatedly touches the touch panel other than the display area of the control panel, the control panels corresponding to the base device **200** and the respective external input devices which are connected to the base device **200** are subjected to rotation and displayed. However, the present invention is not limited to the above structure.

For example, switch icons of the control panels for the respective switchable devices may be disposed on the respective control panels so that the control panel for the intended device is displayed by operating the switch icon.

Also, as described above, the base device **200** includes the tuner **202**, and the communication processor **220**. However, the present invention is not limited to this structure. The base device **200** per se may have the function of a VTR, the function of a DVD, or the function of an STB or an IRD.

Also, the base device **200** may not provide the tuner **202** and the communication processor **220** as well as the function of a VTR, the function of a DVD, or the function of an STB or an IRD, but may merely receive a signal from the external input device and transmit the received signal by radio.

Also, the present invention is applicable to a display device unit having a storage device incorporated thereinto, which displays information from the storage device as the main display information, not depending on the information signal from the external. That is, the display device has a display element such as an LCD whose display screen is provided with a touch panel. The display device can display the information read from the storage device of the display device on the display element as the main display information, and display the control panel which is the operation display information for accepting the operation input from the user. In the display device thus structured, the size and the display position of the main display information can be changed so that the main display information and the operation display information do not overlap with each other.

Also, in the above mentioned embodiment, the display device **100** and the base device **200** are connected by a radio communication, the information signal from the external input device to the base device **200** is connected by wiring through a joining cable, and a remote control signal from the base device **200** to the external input device is connected by a radio communication using an infrared ray, between the base device **200** and the external input device. However, the present invention is not limited to the above structure.

The display device **100** and the base device **200** may be connected to each other by wiring, or the remote control signal from the base device **200** to the external input device can be transmitted by wiring. Also, the information signal and

the remote control signal can be transmitted and received between the base device **200** and the external input device by a radio communication.

Also, the connection of the Internet can be conducted through a so-called broadband communication, or can be conducted through a LAN (local area network) such as a home network system.

The foregoing description of the preferred embodiments of the invention has been presented for purposes of illustration and description. It is not intended to be exhaustive or to limit the invention to the precise form disclosed, and modifications and variations are possible in light of the above teachings or may be acquired from practice of the invention. The embodiments were chosen and described in order to explain the principles of the invention and its practical application to enable one skilled in the art to utilize the invention in various embodiments and with various modifications as are suited to the particular use contemplated. It is intended that the scope of the invention be defined by the claims appended hereto, and their equivalents.

What is claimed is:

1. A display device comprising:

a coordinate-detector which detects a touch of a user on a display;

a controller controlling display of a control panel and a main video signal received by a receiving processor on the display;

a decoder decoding the main video signal to separate the main video signal into a digital video signal;

a size changing device, receiving the main video signal output from the decoder, and reducing or enlarging a size of the main video signal in accordance with control signals of the controller, the size changing device reducing the size of the main video signal by thinning out digital video data of the main video signal and forming a reduced main video signal for display at a desired position on the display upon detection of a touch of the user to initiate display of the control panel, the size changing device enlarging the size of the main video signal by stopping the thinning out of the digital video data of the main video signal and forming an enlarged main video signal for display on the display upon detection of the touch of the user to erase the control panel from the display, and the size changing device reducing or enlarging the size of the main video signal by, respectively, thinning or stopping thinning of the digital video data of the main video signal upon detection of the touch of the user to display a new control panel different from a currently displayed control panel, thereby forming the reduced main video signal or the enlarged main video signal, respectively, to meet the size of the new control panel;

a first processing device, connected to an output of the size changing device, the first processing device (a) forms a control panel video signal of a remote controller corresponding to the control panel, for controlling an external device, according to data supplied from the controller and (b) combines the reduced main video signal or the enlarged main video signal from the size changing device and the control panel video signal;

a second processing device, connected to an output of the first processing device, which displays the combined reduced main video signal or enlarged main video signal and the control panel video signal received from the first processing device, wherein the reduced main video signal and the enlarged main signal do not overlap with the control panel video signal and the control panel video signal is displayed at a touch position based on the detection from the coordinate detector; and

the controller specifies an operation key of the control panel, and the controller determines whether the specified operation key is intended for the external device.

2. The display device according to claim **1**, wherein when the specified operation key is intended for the external device, the controller forms an operation signal according to the specified operation key, and then transmits the operation signal to the external device through a transmitting signals forming section, and when the specified operation key is not intended for the external device, the operation key to be processed in the display device and the controller determines whether the specified operation key instructs erasing of the control panel.

3. A two-way communication system comprising:

a base device; and

a display device including

a coordinate-detector detects a touch of a user on a display;

a controller controlling display of a control panel and a main video signal received by a receiving processor on the display;

a decoder decoding the main video signal to separate the main video signal into a digital video signal;

a size changing device, receiving the main video signal output from the decoder, and reducing or enlarging a size of the main video signal in accordance with control signals of the controller, the size changing device reducing the size of the main video signal by thinning out digital data of the main video signal and forming a reduced main video signal for display at a desired position on the display upon detection of a touch of the user to initiate display of the control panel, the size changing device enlarging the size of the main video signal by stopping the thinning out of the digital video data of the main video signal and forming an enlarged main video signal for display on the display upon detection of the touch of the user to erase the control panel from the display, and the size changing device reducing or enlarging the size of the main video signal by, respectively, thinning or stopping thinning of the digital video data of the main video signal upon detection of the touch of the user to display a new control panel different from a currently displayed control panel, thereby forming the reduced main video signal or the enlarged main video signal, respectively, to meet the size of the new control panel;

a first processing device, connected to an output of the size changing device, the first processing device (a) forms a control panel video signal of a remote controller corresponding to the control panel, for controlling an external device, according to data supplied from the controller and (b) combines the reduced main video signal or the enlarged main video signal from the size changing device and the control panel video signal;

a second processing device, connected to an output of the first processing device, displays the combined reduced main video signal or enlarged main video signal and a control panel video signal received from the first processing device, wherein the reduced main video signal and the enlarged main video signal do not overlap with the control panel video signal and the control panel video signal is displayed at a touch position based on the detection from the coordinate detector; and

the controller specifies an operation key of the control panel, and the controller determines whether the specified operation key is intended for the base device.

4. The two-way communication system according to claim **3**, wherein when the specified operation key is intended for the base device, the controller forms an operation signal according to the specified operation key, and then transmits the operation signal to the base device through a transmitting signals forming section, and when the specified operation key is not intended for the base device, the operation key to be processed in the display device and the controller determines whether the specified operation key instructs erasing of the control panel.

5. A display information method comprising the steps of:

detecting a touch of a user on a display;

controlling display of a control panel and a main video signal received by a receiving processor on the display;

detecting the main video signal by a decoder to separate the main video signal into a digital video signal;

reducing or enlarging a size of a main video signal in accordance with control signals by thinning out digital video data of the main video signal and forming a reduced main video signal for display at a desired position on the display upon detection of a touch of the user to initiate display of the control panel, wherein enlarging the size of the main video signal being by stopping the thinning out of the digital video data of the main video signal and forming an enlarged main video signal for display on the display upon detection of the touch of the user to erase the control panel from the display and reducing or enlarging the size of the main video signal by, respectively, thinning or stopping thinning of the digital video data of the main video signal upon detection of the touch of the user to display a new control panel different from a currently displayed control panel, thereby forming the reduce main video signal or the enlarged main video signal, respectively, to meet the size of the new control panel;

forming a control panel video signal of a remote controller corresponding to the control panel, for controlling an external device, according to data supplied from a controller;

combining the reduced main video signal or the enlarged main video signal and the control panel video signal;

displaying the reduced main video signal or the enlarged main video signal and the control panel video signal, wherein the reduced main video signal or the enlarged main video signal do not overlap with the control panel video signal and the control panel video signal is displayed at a touch position based on the detection; and

specifying an operation key of the control panel, and determining whether the specified operation key is intended for the external device.

6. The display information method according to claim **5**, wherein when the specified operation key is intended for the external device, forming an operation signal according to the specified operation key, and then transmitting the operation signal to the external device and when the specified operation key is not intended for the external device, processing the operation key in the display device and determining whether the specified operation key instructs erasing of the control panel.

7. A non-transitory computer readable medium embodied with a computer program for a display device comprising the steps of:

detecting a touch of a user on a display;

controlling display of a control panel and a main video signal received by a receiving processor on the display;

decoding the main video signal by a decoder to separate the main video signal into a digital video signal;

reducing or enlarging the size of the main video signal in accordance with control signals by thinning out digital video data of the main video signal and forming a reduced main video signal for display at a desired position on the display upon detection of a touch of the user to initiate display of the control panel, wherein enlarging the size of the main video signal being by stopping the thinning out of the digital video data of the main video signal and forming an enlarged main video signal for display on the display upon detection of the touch of the user to erase the control panel from the display and reducing or enlarging the size of the main video signal by, respectively, thinning or stopping thinning of the digital video data of the main video signal upon detection of the touch of the user to display a new control panel different from a currently displayed control panel, thereby forming the reduce main video signal or the enlarged main video signal, respectively, to meet the size of the new control panel;

forming a control panel video signal of a remote controller corresponding to the control panel, for controlling an external device, according to data supplied from a controller;

combining the reduced main video signal or the enlarged main video signal and the control panel video signal;

displaying the reduced main video signal or the enlarged main video signal and the control panel video signal, wherein the reduced main video signal or the enlarged main video signal do not overlap with the control panel video signal and the control panel video signal is displayed at a touch position based on the detection; and

specifying an operation key of the control panel, and determining whether the specified operation key is intended for the external device.

8. The non-transitory computer readable medium according to claim **7**, wherein when the specified operation key is intended for the external device, forming an operation signal according to the specified operation key, and then transmitting the operation signal to the external device, and when the specified operation key is not intended for the external device, processing the operation key in the display device and determining whether the specified operation key instructs erasing of the control panel.

* * * * *