UNITED STATES PATENT AND TRADEMARK OFFICE

BEFORE THE PATENT TRIAL AND APPEAL BOARD

VOLKSWAGEN GROUP OF AMERICA, INC.,
Petitioner

v.

YECHEZKAL EVAN SPERO,
Patent Owner

Case IPR2023-00318
U.S. Patent No. 9,955,551 C1

DECLARATION OF JIANZHONG JIAO, PH.D., IN SUPPORT OF PETITION FOR *INTER PARTES* REVIEW OF U.S. PATENT NO. 9,955,551

Mail Stop PATENT BOARD
Patent Trial and Appeal Board
U.S. Patent & Trademark Office
P.O. Box 1450
Alexandria, VA 22313-1450

TABLE OF CONTENTS

I. INTRODUCTION 1
II. SUMMARY OF GROUNDS 2
III. SUMMARY OF OPINIONS 2
IV. QUALIFICATIONS 3
V. MATERIALS CONSIDERED 7
VI. LEGAL STANDARDS 9
A. My Understanding of Claim Construction 10
B. A Person of Ordinary Skill in the Art 11
C. My Understanding of Obviousness 12
VII. LEVEL OF ORDINARY SKILL IN THE ART 17
VIII. OVERVIEW OF THE ’551 PATENT CLAIMS 18
A. Technology Overview of the Patent Claims 18
B. Independent Claims 56, 64, 72, and 80 27
C. Prosecution History Summary 32
D. Level of Ordinary Skill in the Art 33
E. Claim Construction 33
1. “electronic circuitry apparatus for the controlled powering of the LEDs” 33
IX. OVERVIEW OF APPLIED REFERENCES 34
A. Ground 1 – Beam and Satonaka 34
1. U.S. Patent No. 6,144,158 to Beam 34
2. Japanese Patent Publication No. H7-101291 to Satonaka 38
B. Ground 2 – U.S. Patent No. 6,049,749 to Kobayashi with Beam-Satonaka 40
C. Ground 3 – Karlsson and Nakamura 45
1. WIPO Patent Publication No. 1998/054030 to Karlsson 45
2. Japanese Patent Publication No. JPH07-65603 to Nakamura 49
D. Ground 4 - Gotou with Karlsson-Nakamura 53

X. GROUND 1: BEAM AND SATONAKA RENDER OBVIOUS CLAIMS 56, 57, 62-65, 70-73, 78-81 , AND 86-87 55

A. A POSA would have been motivated to combine Beam and Satonaka with a reasonable expectation of success. 56

B. Independent Claim Structural Elements.....61

1. [56.P]/[64.P]/[72.P]/[80.P] "An illuminating device having automatic control of light provided to an illuminated area comprising" 62

2. [56.1]/[64.1]/[72.1]/[80.1] "a structure for incorporating illuminating device elements, wherein the structure comprises a motor vehicle" 63

3. [56.2]/[64.2]/[72.2]/[80.2] "a plurality of individually controllable LEDs incorporated in the structure via at least one headlamp mounted to the structure, each headlamp including at least one of the LEDs, the LEDs in communication with a power source"...64

4. [56.3]/[64.3]/[72.3]/[80.3] "electronic circuitry apparatus for the controlled powering of the LEDs and other of the illuminating device elements" 66

5. [56.4]/[64.4]/[72.4]/[80.4] "one or more processors".....69

6. [56.5]/[64.5]/[72.5]/[80.5] "one or more sensors, including one or more cameras, placed on the structure for detecting coordinate-specific information about the illuminated area, at least one of said cameras in communication with power, and in communication with at least one of the one or more processors" 69

(a) Beam discloses this element. 69

(b) Satonaka also discloses this element. 71

(c) It would have been obvious to modify Beam in view of Satonaka with a reasonable expectation of success.....72

7. [56.6]/[64.6]/[72.6]/[80.6] "a controller, including at least one of the one or more processors, integrated with the structure via mounting, in communication with the LED controlling power electronic circuitry apparatus, said controller arranged to process the information communicated from the cameras and to automatically control the light provided to the illuminated area" 75

8. [56.7]/[64.7]/[72.7]/[80.7] "memory storing instructions that, when executed by one or more processors of the controller, enable the controller to:" 76

C. Independent Claim 56 Instructions 77

1. [56.8] "determine, based on data from one or more of the sensors, a vertical and horizontal position associated with the at least one other vehicle;" 77

2. [56.9] "select a first cluster of the LEDs based at least in part on at least one of the vertical and horizontal position compared to known aimings of light associated with the first cluster; and"...80

3. [56.10] "reduce intensity of illumination to non-glaring illumination of a first area associated with the at least one other vehicle, relative intensity of illumination on both sides of the first area at elevations common with the first area illuminated by a second cluster of the LEDs, by control of emission from the first cluster." 82

D. Claim 57 "The illuminating device of claim 56, wherein: the data includes image data; the control of emission of the first cluster includes a change of at least one of color or intensity or control of at least one LED of the first cluster into a nonemitting state; at least one of the first cluster second cluster includes a plurality of the LEDs and at least one of the first cluster or the second cluster includes non-contiguous LEDs; and the known light aimings associated with the first cluster is based at least on art on known directionality of light emitted by LEDs of the first cluster exiting from the at least one headlamp." 83

E. Claims 62/70/78/86 "The illuminating device of claim 56, further including one or more optical control elements to control light emitted from one or more of the LEDs." 87

F. Claims 63/71/79/87 "The illuminating device of claim 62, wherein the optical control elements include at least one of one or more reflectors, refractors or lenses." 87

G. Independent Claim 64 Instructions 89

1. [64.8] "select a first cluster of the LEDs having light associated there that is directed towards the other vehicle based at least in part on first data from one or more of the sensors indicating a first position associated with the other vehicle;" 89

2. [64.9] "control a first change to one or more characteristics of the light associated with the first cluster of the LEDs that is directed towards the other vehicle, that diminishes glare to a driver of the other vehicle when the other vehicle is at the first position;" 91

3. [64.10] "select a second, different cluster of the LEDs having light associated therewith that is directed towards the other vehicle based at least in part on second, subsequent data from one or more of the sensors indicating a second, subsequent position associated with the other vehicle; and" 93

4. [64.11] "control a second, subsequent change, to one or more characteristics of the light that is subsequently directed towards the other vehicle, that diminishes glare to the driver of the other vehicle when the other vehicle is at the second position." 94

H. Claim 65 "The illuminating device of claim 64, wherein: the first data or second data includes image data; at least one of the first or second change to characteristics of light associated with at least one of the first or second cluster of LEDs includes at least one of a change to color, to intensity, or a change of at least one LED respective cluster to a non-emitting state; at least one of the first cluster or the second cluster includes a plurality of the LEDs and at least one of the first cluster or the second cluster includes non-contiguous LEDs; and the light that is directed or subsequently directed towards the other vehicle is determined based at least in part on known directionality of light emitted by the respective first or second cluster exiting the at least one headlamp." 96

I. Independent Claim 72 Instructions 99

1. [72.8] "determine a target based on first data from one or more of the sensors;" 99

2. [72.9] "determine a first target location based on the first data; from one or more of the LEDs" 100

3. [72.10] "select a cluster of the LEDs having light associated therewith that is directed at the target, determined based on the first target location;" 100

4. [72.11] "vary illumination provided to the target by the selected cluster, relative to illumination provided to areas laterally adjacent

to the target and provided by at least one LED different from LEDs in the selected cluster; 102

5. [72.12] "maintain a variance of illumination provided to the target relative to the laterally adjacent areas, when subsequent data from one or more of the cameras indicates a change in position of the target relative to the motor vehicle, by repeating the determination of target location, selection of the cluster and variance to illumination provided to the target, relative to the laterally adjacent areas, based on the subsequent data." 104

J. Claim 73 "The illuminating device of claim. 72, wherein: the variation of illumination provided to the target includes variation in at least one of color or intensity at least a change of at least one LED of the selected cluster to a non-emitting state; the cluster includes a plurality of the LEDs and the cluster includes non-contiguous LEDs; the light directed at the target is determined based at least in part on known directionality of light emitted by the first cluster exiting/ram the at least one headlamp; and at least one of the first data or the subsequent data includes image data." 104

K. Independent Claim 80 Instructions 108

1. [80.8] "identify, based on data received from one or more of the sensors, a plurality of positions associated with the target as the target move relative to the motor vehicle; and" 108

2. [80.9] "change, responsive to the positions associated with the target, first light associated with one or more LEDs aimed toward at least a portion of the target, relative to second light associated with other one or more of the LEDs aimed laterally adjacent the target on either side, as the target moves relative to the motor vehicle." 110

L. Claim 81 "The illuminating device of claim 80, wherein: the data includes image data; the memory further stores instructions that when executed by one or more processors of the controller, enable the controller to select a first cluster of LEDs, associated with the first light, for the change, based at least in part on known aimings of the first light associated with the first cluster having a correlation to the at least the portion, the known aimings based at least in part on at least one of known directionality of light emitted by the first cluster or known

directionality of light emitted by the first cluster exiting the headlamp; and the change to emission of one or more LEDs aimed to towards the at least the portion includes a change to intensity or color or a chance of a least one of the LEDs to a non-emitting state.”.....112

XI. GROUND 2: BEAM, SATONAKA, AND KOBAYASHI RENDER OBVIOUS CLAIMS 58–61, 66–69, 74–77, AND 82–85. 115

A. A POSA would have been motivated to combine Beam, Satonaka, and Kobayashi with a reasonable expectation of success. 115

B. Claims 58/66/74/82 “The illuminating device of claim 56, wherein the memory further stores instructions that when executed by one or more processors of the controller, enable the controller to: identify an upcoming road curvature along a road on which the motor vehicle is traveling; and accommodate the upcoming road curvature by adaptation of a light pattern of at least one of the at least one headlamps.”.....126

C. Claims 59/67/75/83 “The illuminating device of claim 58, wherein: the change to emission of the one or more LEDs aimed towards the at least the portion includes a change to intensity or color or a change of at least one of the LEDs to a non-emitting state; the memory further stores instructions that when executed by one or more processors of the controller, enable the controller to select a first cluster of LEDs, associated with the first light, for the change, based at least in part on known aimings of the first light associated with the first cluster having a correlation to the at least the portion, the known aimings based at least in part on at least one of known directionality of light emitted by the first cluster or known directionality of light emitted by the first cluster exiting the headlamp; and the memory further stores instructions that when executed by one or more processors of the controller, enable the controller to accommodate the road curvature by changing illumination in at least a direction of the road curvature by adaptation of the light pattern in at least one of color, intensity or spatial distribution by modification of light associated with one or more of the LEDs.” 128

D. Claims 60/68/76/84 “The illuminating device claim 58, wherein identification of the upcoming road curvature is based at least in

part on map data and wherein the adaptation of the light pattern is based at least in part on the map data." 134

E. Claim 61/69/77/85 "The illuminating device of claim 58, wherein the identification of the upcoming road curvature is based at least in part on sensor data provided by one or more of the sensors of the vehicle and wherein the adaptation of the light pattern is based in part on map data." 134

XII. GROUND 3: KARLSSON AND NAKAMURA RENDER OBVIOUS CLAIMS 56, 57, 62–65, 70–73, 78–81, AND 86–87 135

A. A POSA would have been motivated to combine Karlsson and Nakamura with a reasonable expectation of success. 138

B. Independent Claim Structural Elements.....143

1. [56.P]/[64.P]/[72.P]/[80.P] "An illuminating device having automatic control of light provided to an illuminated area comprising" 143

2. [56.1]/[64.1]/[72.1]/[80.1] "a structure for incorporating illuminating device elements, wherein the structure comprises a motor vehicle" 144

3. [56.2]/[64.2]/[72.2]/[80.2] "a plurality of individually controllable LEDs incorporated in the structure via at least one headlamp mounted to the structure, each headlamp including at least one of the LEDs, the LEDs in communication with a power source".145

4. [56.3]/[64.3]/[72.3]/[80.3] "electronic circuitry apparatus for the controlled powering of the LEDs and other of the illuminating device elements" 145

5. [56.4]/[64.4]/[72.4]/[80.4] "one or more processors".....146

6. [56.5]/[64.5]/[72.5]/[80.5] "one or more sensors, including one or more cameras, placed on the structure for detecting coordinate-specific information about the illuminated area, at least one of said cameras in communication with power, and in communication with at least one of the one or more processors" 147

(a) Karlsson discloses this element. 147

(b) Nakamura discloses this element.....149

(c) It would have been obvious to modify Karlsson in view of Nakamura with a reasonable expectation of success....149

7. [56.6]/[64.6]/[72.6]/[80.6] "a controller, including at least one of the one or more processors, integrated with the structure via mounting, in communication with the controlling power electronic circuitry apparatus, said controller arranged to process the information communicated from the cameras and to automatically control the light provided to the illuminated area" 150

8. [56.7]/[64.7]/[72.7]/[80.7] "memory storing instructions that, when executed by one or more processors of the controller, enable the controller to:" 151

C. Independent Claim 56 instructions.....152

1. [56.8] "determine, based on data from one or more of the sensors, a vertical and horizontal position associated with the at least one other vehicle;" 152

2. [56.9] "select a first cluster of the LEDs based at least in part on at least one of the vertical and horizontal position compared to known aimings of light associated with the first cluster; and".154

3. [56.10] "reduce intensity of illumination to non-glaring illumination of a first area associated with the at least one other vehicle, relative intensity of illumination on both sides of the first area at elevations common with the first area illuminated by a second cluster of the LEDs, by control of emission from the first cluster." 156

D. Claim 57 "The illuminating device of claim 56, wherein: the data includes image data; the control of emission of the first cluster includes a change of at least one of color or intensity or control of at least one LED of the first cluster into a nonemitting state; at least one of the first cluster second cluster includes a plurality of the LEDs and at least one of the first cluster or the second cluster includes non-contiguous LEDs; and the known light aimings associated with the first cluster is based at least on art on known directionality of light emitted by LEDs of the first cluster exiting from the at least one headlamp." 158

E. Claims 62/70/78/86 "The illuminating device of claim 56, further including one or more optical control elements to control light emitted from one or more of the LEDs." 160

F. Claims 63/71/79/87 "The illuminating device of claim 62, wherein the optical control elements include at least one of one or more reflectors, refractors or lenses." 161

G. Independent Claim 64 instructions.....162

1. [64.8] "select a first cluster of the LEDs having light associated there that is directed towards the other vehicle based at least in part on first data from one or more of the sensors indicating a first position associated with the other vehicle;" 162

2. [64.9] "control a first change to one or more characteristics of the light associated with the first cluster of the LEDs that is directed towards the other vehicle, that diminishes glare to a driver of the other vehicle when the other vehicle is at the first position;" ..164

3. [64.10] "select a second, different cluster of the LEDs having light associated therewith that is directed towards the other vehicle based at least in part on second, subsequent data from one or more of the sensors indicating a second, subsequent position associated with the other vehicle; and." 165

4. [64.11] "control a second, subsequent change, to one or more characteristics of the light that is subsequently directed towards the other vehicle, that diminishes glare to the driver of the other vehicle when the other vehicle is at the second position." 166

H. Claim 65 "The illuminating device of claim 64, wherein: the first data or second data includes image data; at least one of the first or second change to characteristics of light associated with at least one of the first or second cluster of LEDs includes at least one of a change to color, to intensity, or a change of at least one LED respective cluster to a non-emitting state; at least one of the first cluster or the second cluster includes a plurality of the LEDs and at least one of the first cluster or the second cluster includes non-contiguous LEDs; and the light that is directed or subsequently directed towards the other vehicle is determined based at least in part on known directionality of light emitted by the respective first or second cluster exiting the at least one headlamp." 167

I. Independent Claim 72 instructions.....169

1. [72.8] "determine a target based on first data from one or more of the sensors;" 169

2. [72.9] "determine a first target location based on the first data; from one or more of the LEDs" 170

3. [72.10] "select a cluster of the LEDs having light associated therewith that is directed at the target, determined based on the first target location;" 171

4. [72.11] "vary illumination provided to the target by the selected cluster, relative to illumination provided to areas laterally adjacent to the target and provided by at least one LED different from LEDs in the selected cluster; 172

5. [72.12] "maintain a variance of illumination provided to the target relative to the laterally adjacent areas, when subsequent data from one or more of the cameras indicates a change in position of the target relative to the motor vehicle, by repeating the determination of target location, selection of the cluster and variance to illumination provided to the target, relative to the laterally adjacent areas, based on the subsequent data." 174

J. Claim 73 "The illuminating device of claim. 72, wherein: the variation of illumination provided to the target includes variation in at least one of color or intensity at least a change of at least one LED of the selected cluster to a non-emitting state; the cluster includes a plurality of the LEDs and the cluster includes non-contiguous LEDs; the light directed at the target is determined based at least in part on known directionality of light emitted by the first cluster exiting/ram the at least one headlamp; and at least one of the first data or the subsequent data includes image data." 175

K. Independent Claim 80 instructions.....177

1. [80.8]"identify, based on data received from one or more of the sensors, a plurality of positions associated with the target as the target move relative to the motor vehicle; and" 177

1. [80.9] "change, responsive to the positions associated with the target, first light associated with one or more LEDs aimed toward at least a portion of the target, relative to second light associated with other one or more of the LEDs aimed laterally adjacent the target on either side, as the target moves relative to the motor vehicle." 179

L. Claim 81 "The illuminating device of claim 80, wherein: the data includes image data; the memory further stores instructions that when executed by one or more processors of the controller, enable the controller to select a first cluster of LEDs, associated with the first light, for the change, based at least in part on known aimings of the first light associated with the first cluster having a correlation to the at least the portion, the known aimings based at least in part on at least one of known directionality of light emitted by the first cluster or known directionality of light emitted by the first cluster exiting the headlamp; and the change to emission of one or more LEDs aimed to towards the at least the portion includes a change to intensity or color or a chance of a least one of the LEDs to a non-emitting state." 180

XIII. GROUND 4: KARLSSON, NAKAMURA, AND GOTOU RENDER OBVIOUS CLAIMS 58–61, 66–69, 74–77, AND 82–85. 182

A. A POSA would have been motivated to combine Karlsson, Nakamura, and Gotou with a reasonable expectation of success. 182

B. Claims 58/66/74/82 "The illuminating device of claim 56, wherein the memory further stores instructions that when executed by one or more processors of the controller, enable the controller to: identify an upcoming road curvature along a road on which the motor vehicle is traveling; and accommodate the upcoming road curvature by adaptation of a light pattern of at least one of the at least one headlamps." 185

C. Claims 59/67/75/83 "The illuminating device of claim 58, wherein: the changed emission includes a change to at least one of intensity or color or a change of at least one LED of the cluster to a non-emitting state; the cluster includes a plurality of the LEDS and the cluster includes non-contiguous LEDs; and the memory further stores instructions that, when executed one or more processors of the controller, enable the controller to accommodate the road curvature by changing illumination in at least a direction of the road curvature by adaptation of the light pattern in at least one of color, intensity or spatial distribution by LEDs." 186

D. Claims 60/68/76/84 "The illuminating device claim 58, wherein identification of the upcoming road curvature is based at least in

part on map data and wherein the adaptation of the light pattern is based at least in part on the map data." 187

E. Claim 61/69/77/85 "The illuminating device of claim 58, wherein the identification of the upcoming road curvature is based at least in part on sensor data provided by one or more of the sensors of the vehicle and wherein the adaptation of the light pattern is based in part on map data." 188

XIV. THE ALLEGED SECONDARY CONSIDERATIONS DO NOT DEMONSTRATE NONOBVIOUSNESS 189

CONCLUSION 191

I. INTRODUCTION

I, Dr. Jianzhong Jiao, declare as follows:

1. I have been retained on behalf of Volkswagen Group of America, Inc. ("VWGoA" or "Petitioner") for the above-captioned *inter partes* review proceeding to provide my expert opinions and expert knowledge. I understand that this proceeding involves U.S. Patent No. 9,955,551 ("the '551 patent") titled "Detector Controlled Illuminating System," to Yechezkal Evan Spero, and that Torchlight Technologies, LLC has purported to be the exclusive licensee of the '551 patent. I understand that the Petition submitted by Petitioner challenges claims 56-87 of the '551 patent.

2. The '551 patent describes, generally, adaptive headlamp systems and methods. I am familiar with the technology described in the '551 patent as of its earliest possible priority date, July 12, 2002.

3. I have been asked to provide my independent technical review, analysis, insights, and opinions regarding the '551 patent and the references that form the basis for the grounds of unpatentability set forth in the Petition for *inter partes* review of the '551 patent filed by Petitioner.

4. In preparing this declaration, I have reviewed and am familiar with all the documents cited in this declaration. I have reviewed and am familiar with the '551 patent and its file history, including the history of the reexamination

proceeding that resulted in the challenged claims. I confirm that to the best of my knowledge, the accompanying exhibits are true and accurate copies of what they purport to be, and that an expert in the field would reasonably rely on them to formulate opinions such as those set forth in this declaration.

5. I am being compensated at my customary rate of $400 per hour for my work on this case. My compensation is not dependent upon my opinions, my testimony, or the outcome of this case.

II. SUMMARY OF GROUNDS

6. I understand that the Petition for *inter partes* review of the ’551 patent filed by Petitioner asserts the following Grounds of unpatentability:

Ground	References	Basis	Claims Challenged
1	Beam, Satonaka	§103	56-57, 62-65, 70-73, 78-81, 86-87
2	Beam, Satonaka, Kobayashi	§103	58-61, 66-69, 74-77, 82-85
3	Karlsson, Nakamura	§103	56-57, 62-65, 70-73, 78-81, 86-87
4	Karlsson, Nakamura, Gotou	§103	58-61, 66-69, 74-77, 82-85, 86-87

III. SUMMARY OF OPINIONS

7. In my opinion, the challenged claims of the ’551 patent would have been obvious in view of the combinations of references Petitioner asserts in the context of common knowledge and industry practice at the time of its filing.

8. Therefore, it is my opinion that the challenged claims would have been obvious in view of the disclosures in the asserted prior art references, as described in detail below.

IV. QUALIFICATIONS

9. My experience and education are detailed in my curriculum vitae ("CV"), a copy of which is provided as Exhibit 1004. My CV also lists peer-reviewed publications on which I am the primary author or a named author, and identifies parties on behalf of whom I have previously provided expert testimony.

10. I received my B.S. degree in Mechanical Engineering from the Beijing Polytechnic University in Beijing, China in 1980. Immediately thereafter, I completed my M.S. degree in Applied Physics from the Beijing Institute of Posts and Telecommunications in Beijing, China in 1983. I thereafter attended Rensselaer Polytechnic Institute for graduate studies for the Ph.D. program for Physics in 1985. I thereafter received my Ph.D. degree in Electrical Engineering from Northwestern University in Evanston, IL in 1989.

11. I worked at General Motors Corporation from 1989 to 1993 as a Senior Development Engineer on automotive lighting applications including leading and managing R&D projects to implement automotive lighting using LEDs and other technologies.

12. I worked at North American Lighting, Inc., a Koito Group Company, from 1993 to 2007 as a Manager and then General Manager of Engineering Technology on a variety of matters, including: strategic planning for new technology implementation including HID, LED, adaptive front-lighting system (AFS) technologies; establishing and managing an engineering team over four departments (Optical Design, Electronic Technologies, Engineering Analysis, Regulation and Standards); and growth of revenue and expansion of the U.S. customer base.

13. I worked at OSRAM Opto-Semiconductors Inc. from 2007 to 2015 as a Director of Regulations and Emerging Technologies on a variety of matters, including: establishing strategies for LED technology and applications; managing LED technology strategies and implementations in automotive lighting, general illumination, horticulture lighting, intelligent lighting, human centric lighting, displays, and others applications; managing activities relating to LED and lighting regulations and standards; and interfacing with academia, industrial consortium programs, and governmental agencies on technology development in LEDs and lighting applications.

14. Since 2015, I have been self-employed as a consultant in the areas of LEDs, lasers, and lighting technologies, and the applications for industry, governmental agencies, and professional associations. I am also currently

involved in the academic arena through a variety of professional activities. For example, I serve as an instructor for short courses, workshops, and seminars for the SAE International (formerly Society of Automotive Engineers, Mar. 2003 – present); for the Society of International Optical Engineers (Jan. 2009 – Jan. 2014); for Strategies in Light (May 2011 – 2021); and for Light Fair International (May 2010 – present). I have also served as an adjunct professor, an assistant professor, and a teaching/research assistant at several universities in the U.S. and around the world, including Fudan University (Shanghai, China), Lawrence Technological University (Southfield, MI), Purdue University Anderson Campus (Anderson, IN), Northwestern University (Evanston, IL), and the Beijing Institute of Posts and Telecommunications (Beijing, China).

15. I am currently active in the following professional organizations: SAE International (SAE, since 1989 as an SAE Fellow Member); International Society for Optical Engineering (SPIE, since 1989 as an SPIE Senior Member); Illuminating Engineering Society (IES, since 2007); and International Commission on Illumination (CIE – U.S.A, since 2007).

16. I have served in the leadership roles in several U.S. professional associations, trade associations, and standardization organizations that are developing LED and LED lighting standards, including: former Chair of the Plant Growth LED Lighting Committee of the American Society of Agricultural

and Biological Engineers (ASABE); former Chair of the Lighting Standard Committee of SAE; former Treasurer of the Testing Procedures Committee of IES; current Vice Chair of the Light Sources Committee of IES; current Chair of the Computer Committee of IES; Member of the Roadway Lighting Committee of IES; and Member of Standard Technical Panel of UL.

17. I have received various honors and awards over the years, including: SAE James M. Crawford Executive Standards Committee Outstanding Achievement Award (2022); Senior Member of SPIE (2015); SAE Arch T. Colwell Cooperative Engineering Medal (2010); SAE Fellow (2008); SAE Technical Standards Board Outstanding Contribution Award (2008); SAE Forest R. McFarland Award (2007 and 2000); and Excellence in Oral Presentation Award at the SAE 2005 World Congress (2005).

18. I have written over fifty technical papers and articles and have served as editor on fifteen books on LEDs and lighting technologies, as listed on my CV. EX1004. I have been invited to deliver numerous speeches and presentations on LEDs and LED lighting at various conferences since 1995.

19. Additionally, I am an inventor for nine U.S. patents: U.S. Patent No. 7,144,141 entitled “Self-Aim Vehicle Light Device”; U.S. Patent No. 7,059,754 entitled “Apparatus and Method for Providing a Modular Vehicle Light Device”; U.S. Patent No. 6,953,261 entitled “Reflector Apparatus for a Tubular

Light Source"; U.S. Patent No. D503,004 entitled "Vehicle Fog Lamp"; U.S. Patent No. 6,623,132 entitled "Light Coupler Hingedly Attached to a Light Guide for Automotive Lighting"; U.S. Patent No. 6,305,813 entitled "Display Device Using a Light Guide for Exterior Automotive Lighting"; U.S. Patent No. 6,007,224 entitled "Automotive Headlamp Reflector and Method for its Design"; U.S. Patent No. 5,390,265 entitled "Fiber Optic Light Coupler"; and U.S. Patent No. 5,197,792 entitled "Illuminator Device for a Display Panel."

20. A detailed description of my professional qualifications, including a listing of my specialties/expertise and professional activities, is contained in my CV. EX1004.

V. MATERIALS CONSIDERED

21. In formulating my opinions, I have relied upon my training, knowledge, and experience that are relevant to the '551 patent. Furthermore, I have specifically considered the following documents, in addition to other sources cited in this Declaration:

Exhibit #	Description
1001	U.S. Patent No. 9,955,551 B2 to Spero ("the '551 patent")
1002	File History of Ex Parte Reexamination of U.S. Patent No. 9,955,551, Control No. 90/014,815
1004	Curriculum Vitae of Dr. Jianzhong Jiao
1005	U.S. Patent No. 6,144,158 to Beam
1008	U.S. Patent No. 6,049,749 to Kobayashi
1009	WIPO Patent Publication No. 2002/004247 to Braun *et al.*
1010	WIPO Patent Publication No. 1998/054030 to Karlsson

Exhibit #	Description
1012	U.S. Patent No. 5,588,733 to Gotou
1013	English Translation of Japanese Unexamined Patent Application Publication H7-65603 to Nakamura *et al*.
1014	English Translation of Japanese Unexamined Patent Application Publication H7-101291 to Satonaka *et al*.
1015	Westermann, "History and Scientific Back-up," 48th Session of GRE, EUREKA Project 1403, Informal Document No. 30, April 30, 2002
1016	"Adaptive Front Lighting Systems (AFS)," 48th Session of GRE, EUREKA Project 1403, Informal Document No. 28, April 12, 2002
1017	Hogrefe et al., "Adaptive Light Pattern – A New Way to Improve Light Quality," SAE Transactions, Vol. 106, No. 6, February 27, 1997
1018	Löwenau et al., "Adaptive Light Control – A New Light Concept Controlled by Vehicle Dynamics and Navigation, SAE Transactions, Vol. 107, No. 6, pp. 33-38, February 26, 1998
1019	Manassero et al., "Adaptive Headlamp: A contribution for Design and Development of Motorway Light," SAE Transactions, Vol. 107, No. 6, February 26, 1998
1020	Michael Hamm, "System Strategies for Adaptive Lighting Systems," 2001 Symposium: Progress in Automobile Lighting (PAL), pp. 368-380, September 26, 2001
1023	Manassero et al., Adaptive Lighting Systems: Technical Solutions and Methodological Approach for Photometric Specifications, Progress in Automotive Lighting Vol. 6, pp. 514-525 (1999).
1024	Hanno Westermann, Lighting Performance Requirements in Vehicle Lighting Exemplified by System Requirements for AFS, Progress in Automotive Lighting Vol. 6, pp. 807-820 (1999).
1025	Diem et al., Analysis of the Eye-Movement Behaviour During Use Moveable Headlamps, Progress in Automotive Lighting Vol. 5, pp. 185-207 (1999).

Exhibit #	Description
1026	Kobayashi & Sugimoto, Development of the Phase-I AFS Front Lighting System, Progress in Automotive Lighting Vol. 5, pp. 449-464 (1999).
1027	Alejandro Vukotiich, Evaluation of the applicability of digital maps for the reconstruction of the real street shape, Progress in Automotive Lighting Vol. 6, pp. 774-790 (1999).
1028	Bernhard Wörner, Adaptive Frontlighting – Experimental System, Development and Functional Evaluation, Progress in Automotive Lighting Vol. 6, pp. 844-853 (1999).
1030	Assessment of Headlamp Glare and Potential Countermeasures, Survey of Advanced Front Lighting System (AFS) Research and Technology, National Highway Traffic Safety Administration (2005)
1034	U.S. Patent No. 6,127,947 to Uchida *et al*.
1035	*Ex Parte* Reexamination Certificate of U.S. Patent No. 9,955,552 to Spero, issued Aug. 19, 2022
1036	U.S. Patent No. 5,523,193 to Nelson
1037	U.S. Patent Application 2004/0052090 to Pederson
1038	U.S. Patent No. 4,662,746 to Hornbeck
1039	U.S. Patent No. 5,061,049 to Hornbeck
1040	U.S. Patent No. 5,933,183 to Enomoto *et al*.

VI. LEGAL STANDARDS

22. I have also relied upon various legal principles (as explained to me by Petitioner's counsel) in formulating my opinions. My understanding of these principles is summarized below.

23. I have been told the following legal principles apply to analysis of patentability. I also have been told that, in an *inter partes* review proceeding, a patent claim may be deemed unpatentable if it is shown by a preponderance of

evidence that the claim is anticipated by one prior art reference under 35 U.S.C. § 102, or rendered obvious by one or more prior art references under 35 U.S.C. § 103.

24. I understand that documents and materials, such as printed publications or patents, that qualify as prior art can be used to render a patent claim as anticipated or as obvious.

25. I understand that once the claims of a patent have been properly construed, the second step in determining anticipation or obviousness of a patent claim requires a comparison of the properly construed claim language to the prior art on a limitation-by-limitation basis.

A. My Understanding of Claim Construction

26. I understand that during an *inter partes* review proceeding, claims are to be construed in light of the specification as would be read by a person of ordinary skill in the relevant art ("POSA") at the time of the purported priority date. I understand that claim terms are given their ordinary and customary meaning as would be understood by a POSA in the context of the entire disclosure. A claim term, however, will not receive its ordinary meaning if the patentee acted as his own lexicographer and clearly set forth a definition of the claim term in the specification. In this case, the claim term will receive the definition set forth in the patent.

27. I understand that claims may be expressed as a means or step for performing a specified function without the recital of structure, material, or acts that support this function. These claims are construed to cover the corresponding structure, material, or acts described in the specification, and equivalents. Construing these so-called "means-plus-function" claims requires looking to the specification and interpreting the claim language in light of the corresponding structure, material, or acts described in the specification.

28. I further understand that the use of the phrases "means for" or "step for" followed by a function triggers a presumption that the relevant term falls under means-plus-function claiming. I also understand that the absence of these terms triggers a presumption that the relevant term does not recite a means-plus-function term. This presumption can be overcome if the claim term does not recite sufficient structure, material, or acts to perform the relevant function.

B. A Person of Ordinary Skill in the Art

29. I understand that a POSA is presumed to be aware of all pertinent art, thinks along conventional wisdom in the art, and is a person of ordinary creativity—not an automaton.

30. I have been asked to consider the level of ordinary skill in the field that someone would have had at the time the alleged invention was made. In deciding the level of ordinary skill, I considered the following:

- the levels of education and experience of persons working in the field;
- the types of problems encountered in the field; and
- the sophistication of the technology.

31. I understand that the relevant time for considering whether a claim would have been obvious to a POSA is at the time of the alleged invention, which I have been told to assume for this case is July 12, 2002.

32. Regardless of if I use "I" or "POSA" during my technical analysis below, all of my statements and opinions are to be understood to be based on how a POSA would have understood or read a document at the time of the alleged invention.

C. My Understanding of Obviousness

33. I understand that a patent claim is unpatentable if the claimed invention would have been obvious to a POSA at the time of the alleged invention. I understand that this means that even if all of the elements of the claim cannot be found in a single prior art reference that would anticipate the claim, the claim can still be unpatentable.

34. It is my understanding that to obtain a patent, a claimed invention must have been, as of its earliest possible priority date, non-obvious in view of the prior art in the field. I understand that a patent claim is obvious when the differences between the subject matter sought to be patented and the prior art are

such that the subject matter as a whole would have been obvious to a POSA at the time the alleged invention was made.

35. When considering the issues of obviousness, I have been told that I am to do the following:

- Determine the scope and content of the prior art;
- Ascertain the differences between the prior art and the claims at issue;
- Resolve the level of ordinary skill in the pertinent art; and
- Consider evidence of secondary indicia of non-obviousness (if available).

36. With respect to determining the proper scope of prior art to examine, I understand that in order for a prior art reference to be properly used in an obviousness ground under 35 U.S.C. § 103, the prior art reference must be analogous art to the claimed invention. I have been told that a reference is analogous art to the claimed invention only if: (1) the reference is from the same field of endeavor as the claimed invention; or (2) the reference is reasonably pertinent to the particular problem solved by the inventor.

37. I understand that factors relevant to determining the proper field of endeavor include the inventor's explanations of the subject matter (including the patent specification), as well as the claimed invention's structure and function. And I further understand that to be reasonably pertinent to the particular

problem solved by the inventor, a prior art reference must logically commend itself to the inventor's attention in considering his or her problem.

38. I have been told that an analogous reference may be modified or combined with other analogous references or with the POSA's own knowledge if the person would have found the modification or combination obvious. I have also been told that a POSA is presumed to know all relevant, analogous prior art, and that the obviousness analysis may take into account the inferences and creative steps that a POSA would employ.

39. In determining whether a prior art reference would have been combined with another prior art reference or other information known to a POSA, I have been told that the following principles may be considered:

- A combination of familiar elements according to known methods is likely to be obvious if it yields predictable results;
- The simple substitution of one known element for another is likely to be obvious if it yields predictable results;
- The use of a known technique to improve similar devices, products, or methods in the same way is likely to be obvious if it yields predictable results;
- The application of a known technique to a prior art reference that is ready for improvement is likely obvious if it yields predictable results;

- Any need or problem known in the field and addressed by the reference can provide a reason for combining the elements in the manner claimed;
- A skilled artisan often will be able to fit the teachings of multiple references together like a puzzle; and
- The proper analysis of obviousness requires a determination of whether a POSA would have a "reasonable expectation of success"—not "absolute predictability" of success—in achieving the claimed invention by combining prior art references.

40. I understand that whether a prior art reference renders a claim unpatentable as obvious is determined from the perspective of a POSA. I have also been told that, while there is no requirement for the prior art to contain an express suggestion to combine known elements to achieve the claimed invention, a suggestion to combine known elements to achieve the claimed invention may come from the prior art as a whole or individually, as filtered through the knowledge of a POSA. In addition, I have been told the inferences and creative steps a POSA would employ are also relevant to the determination of obviousness.

41. I also understand that when a work is available in one field, design alternatives and other market forces can prompt variations of it, either in the

same field or in another. I have also been told that if a POSA can implement a predictable variation and would see the benefit of doing so, that variation is likely to be obvious. I have been told that in many fields, there may be little discussion of obvious combinations, and in these fields market demand—not scientific literature—may drive design trends. I have been told that when there is a design need or market pressure and there are a finite number of predictable solutions, a POSA has good reason to pursue those known options.

42. I have been told there is no rigid rule prescribing a reference or combination of references must contain a "teaching, suggestion, or motivation" to combine references. But I also have been told that the "teaching, suggestion, or motivation" test can be a useful guide in establishing a rationale for combining elements of the prior art. I have been told this test poses the question as to whether there is an express or implied teaching, suggestion, or motivation to combine prior art elements in a way that realizes the claimed invention, and that it seeks to counter impermissible hindsight analysis.

43. Further, it is my understanding that a claim or claim element that has no patentable difference between another claim or claim element means that the same prior art references can be applied to those claims or claim elements. Additionally, it is my understanding that a claim or claim element that has no patentable difference between another claim or claim element means that there

is no difference in what is required from a technical standpoint, and the same prior art citations disclose the respective features. In addition, it is my understanding that a claim or claim element that has no patentable difference between another claim or claim element means and that there are some individual features across the claim sets or claim element sets that are similar, but have no patentable difference between them, for the same reasons. I have identified a claim or claim element that has no patentable difference between another claim or claim element throughout this declaration as appropriate, and the same prior art references are applied to those limitations as provided in the analysis.

VII. LEVEL OF ORDINARY SKILL IN THE ART

44. In my opinion, a POSA in the context of the ’551 patent as of July 12, 2002 (the earliest possible priority date of the ’551 patent)[1] would have had a bachelor of science (B.S.) degree in mechanical engineering, electrical engineering, optical engineering, applied physics, or an equivalent field, as well as at least 2 years of industry experience in the area of automotive lighting and lighting-control systems. The POSA may work as part of a team, for example, with computer

[1] For this declaration, I have been asked to assume that July 12, 2002, is the earliest effective priority date, but the POSA definition would not change even if a later priority date is used.

engineers to integrate, program, etc., controllers and various control inputs to affect control of a given light source.

45. Experience could take the place of some formal training, as domain knowledge may be learned on the job. This description is approximate, and a higher level of education or skill might make up for less experience and vice versa.

46. As an academic teaching, and an engineer-by-trade conducting engineering research, product design, and testing at the time of the ’551 patent filing, I am particularly qualified to determine the level of ordinary skill in the art and recount the expectations of a B.S. degree and beyond in the above-cited engineering fields. I am very familiar with the technology of the ’551 patent before, during, and after the July 12, 2002 timeframe. By this date, I had over 13 years of post-doctoral experience working with these technologies. *See above*, Section IV.

VIII. OVERVIEW OF THE ’551 PATENT CLAIMS

A. Technology Overview of the Patent Claims

47. The ’551 patent claims relate to motor vehicle headlamps; however the specification of the ’551 patent focuses primarily on *non-vehicle* applications. Of the approximately 100 columns of description, most all of the vehicular headlamp disclosure is centered around Figure 15.

48. Because the focus of the claims relates to motor vehicle headlamp systems and methods, I provide the following historical background related to

automotive headlamps, the application of adaptive front lighting systems/beam control, known glare-reduction techniques, anti-blinding systems, etc., including use of LEDs as light sources for headlamps.

49. By mid-2000 and several years before the earliest possible priority date, all the technologies claimed in the ’551 patent were well known by developers of automotive lighting systems, and specifically the adaptive automotive lighting systems. No individual elements of the ’551 patent claims were new, and there was nothing new about the manner in which those elements were combined in the claims. I know this because I had firsthand experience in automotive lighting systems and closely followed the real-time history of the development of such systems.

50. Indeed, Grounds 1 and 3 demonstrate why it would have been obvious for an adaptive headlamp system to utilize known sensor inputs to output multiple directional (angular) light distributions with a predefined dimmed or desired illuminance, in response to the sensor inputs. And Grounds 2 and 4 demonstrate why it would have been obvious to modify the system to use sensor data to illuminate curved roadways.

51. Adaptive lighting for headlamps to control one or more illumination characteristics was well known. As early as the 1940s and 1950s, vehicles such as the Tucker Torpedo and Citroen DS-19 included headlamps that swiveled with the

turning angle of the wheels via mechanical linkage. EX1030, NHTSA Survey, 3-4. Most notably with relation to the technology claimed in the ’551 patent, from about 1992 to 1999, a global consortium of headlamp and automobile manufacturers participated in the EUREKA Project to advance development of adaptive front lighting systems (AFS). EX1015, Westermann, 3-6; EX1016, AFS Presentation, 0001-19; EX1023, Manassero, 514-515; EX1024, Westermann, 819. The EUREKA Project was a well-known consortium that a POSA would have been aware of. The EUREKA Project investigated, studied, and recommended AFS functions, including dynamic road illumination, glare control, explored reflectance of pedestrians and road signs, and other headlamp features. EX1015, 4.

52. By 1997, adaptive (dynamic) lighting’s potential to increase road safety, driving safety, and drivers’ visual comfort as an improvement over fixed (static) headlamps was well known. EX1017, Hogrefe, 3-10. Other background references support this finding. EX1018, Löwenau, 33-36 (“A new light concept called Adaptive Light Control (ALC) is developed with the aim to improve night time traffic safety.”); EX1019, Manassero, 1-2 (“A major breakthrough in improving visibility, safety and comfort under all driving conditions is given by a headlamp with adjustable light intensity and beam pattern according to the vehicle speed, steering wheel angles and different driving conditions.”); EX1020, Hamm, 368, 370, 374-378 (“The car’s sensors analyze and evaluate the driving situation and generate

a light distribution that is adapted to that particular situation. In this process, not only the driver's comfort is increased but the visibility is improved also. This has a direct positive impact on traffic safety."); EX1024, 819 ("The challenge of such a system approach and the necessary and not so easy change towards performance and system requirements was clearly seen - but also the prospects of possible safety improvement."); EX1025, Diem, 202 ("One explanation could be that because of the available luminous flux in direction of driving, the driver has the ability to recognize the subsequent direction peripherally and can fixate other interesting objects in the road area. With other words the driver has more time for driving and the tiredness of the eyes could be reduced."); EX1028, Wörner, 844 ("The driver's comfort and safety can be improved considerably by adaptive motor vehicle headlighting, with the today's [*sic*] technical means in lighting design and manufacturing, as well as sensors and communication systems in cars.").

53. Further, individually controllable spatial light modulators (SLMs), including digital mirror devices (DMDs), producing directional light beams with different angles/aimings were well known for illumination applications, including adaptive vehicle lighting applications. EX1005, Beam, 4:26-59 ("spatial light modulator"), 8:4-17 ("digital mirror devices"), FIGS. 1, 2, 4; EX1009, Braun, 21:13-16 ("digital mirror device, a 'DMD' device, and each luxel 76 comprises a micromirror"), 14:12-33; FIGS. 2-5; EX1010, Karlsson, 5:11-15 ("Micro Mirrors"),

14:1-15, FIGS. 3, 6, 14; EX1038, Hornbeck, 1:12-10:3, FIGS. 1-3; EX1039, Hornbeck, 9:16-11:11, FIGS. 1-6; EX1040, Enomoto, 1:16-30, FIGS. 1, 2A-2C; EX1036, Nelson, 3:52-4:32, FIGS. 2-6.

54. Adaptive lighting commonly used multiple directional light sources (e.g., multiple directional beams, such as light modules or beam contributors) to produce an adaptive light pattern (angular light intensity distribution) by varying illumination characteristics including beam intensity, beam shape, beam color, beam direction around curved roads, and glare reduction. EX1017, 3-10 ("[A] curve or an intersection can be adaptively illuminated before reaching actually the point when the steering wheel is turned or the turn indicator is operated."); EX1018, 33-36 ("The advantage of using Adaptive Light Control is shown in Fig. 5, where one observes a country road lit correctly. Instead of illuminating some fields or trees, the available light is directed dynamically in the direction where it is actually needed, enhancing the visual information for the driver."); EX1019, 1-2 ("A major breakthrough in improving visibility, safety and comfort under all driving conditions is given by a headlamp with adjustable light intensity and beam pattern according to the vehicle speed, steering wheel angles and different driving conditions."); EX1020, 368, 370, 374-378 ("The results show, that significant improvements can be proven by the adaptive headlamp system, without generating additional glare for oncoming traffic.").

55. As an example, Exhibit 1017, Hogrefe, shows how adapted light patterns can increase safety on curved roads, at high speeds, and within cities, for example, by varying improved lateral illuminance (shaping the beam pattern to provide more light around curves), increasing projection length of the beam to improve driver's visibility, and expanding the beam width to capture a wider angle, for example. And as Hogrefe's Figure 3 explains, "the individual light *pattern* of multiple sub-units sum up to the total adaptive light pattern." EX1017, FIG. 3 (emphasis in original).

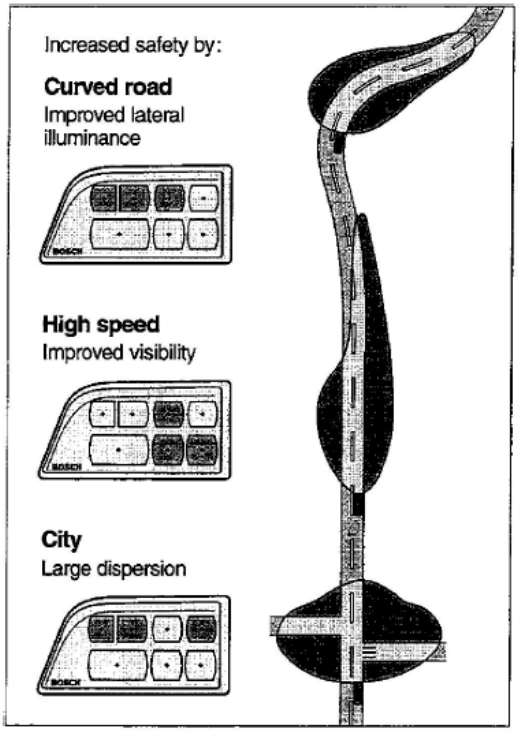

Fig.1: Three standard driving situations with adapted light pattern seen from the bird eye's view.

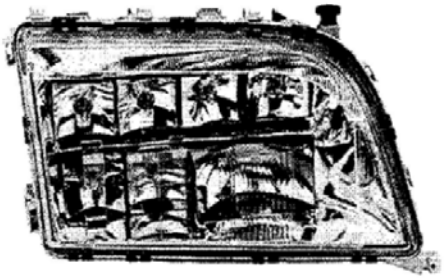

Fig 4: ALP *headlamp* sample

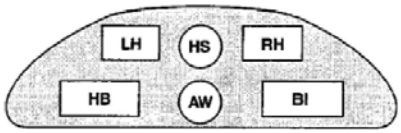

Single components:

LH Left hand bend
RH Right hand bend
HB High beam
BI Basic illumination
AW Adverse weather illumination
HS Hot spot

Fig. 5 Advanced ALP sample layout

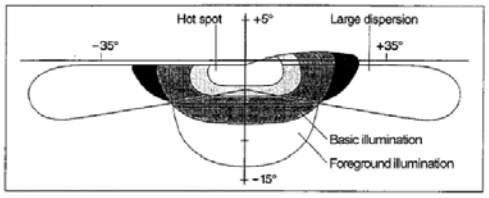

Fig. 3: Light pattern of multiple beam *headlamp* (*Isolux* curves in wall projection): The individual light *pattern* of multiple sub-units sum up to the total adaptive light pattern

EX1017, FIGS. 1, 3-5.

56. Adaptive lighting to reduce glare in a portion of an oncoming or following driver's field-of-view was also well known. In 1999, a POSA in the

industry understood that the beam pattern in AFS systems could be adapted for different driving, weather, and environment conditions, and to keep glare at a lower level when meeting or following other vehicles on the road. EX1023, 514-515. AFS systems could use existing sensor signals on the vehicle to measure and collect ambient conditions, then to modify the lighting performance to the traffic conditions, and to prevent deteriorating glare effects for other road users. EX1024, 815-816.

57. By 2000, adaptive headlamp systems with multiple directional light beams were developed with various means of sensors to detect surroundings while driving and resulted in glare reduction for oncoming and preceding vehicle drivers. EX1005, 1:5-3:44, 4:9-59; EX1010, 1:10-26, 9:18-26, 20:29-32; *see also* EX1015, 6-18, 21; EX1016, 0001-19 ("[A]ll GRE experts acknowledge the experience with the new technology of front lighting, designed to improve the illumination and to adapt it to various driving situations, whilst reducing glare."); EX1009, 6:4-7 ("According to an aspect of some embodiments of the present invention, the pattern recognition application identifies oncoming vehicles and automatically adjusts illumination provided by the luxels to prevent glare from light provided by the luxels from blinding a driver of the oncoming vehicle."), 16:6-25, 20:15-33. Further, arrays of independently controlled narrow-beam directional light sources, for example, light-emitting diode (LED) arrays, were developed with sufficient

illuminance, directionality, and dynamic control as an alternative to traditional incandescent and gas discharge bulbs to provide adaptive light patterns and real-time feedback. EX1005, 1:5-3:44, 4:9-59; EX1010, 1:10-26, 9:18-26, 20:29-32; EX1015, 6-18, 21; EX1009, 16:6-25, 20:15-33.

58. As I explain in this declaration, the ’551 patent claims are directed to systems and methods previously known in the art for adaptively controlling headlamp illumination characteristics. The ’551 patent claims recite known control schemes implemented by a known controller to control multiple directional light sources based on sensor data of a field-of-view. For example, the light emissions from a selected cluster of LEDs are changed to prevent glare directed at oncoming traffic. Thus, a known control input is applied to a known way of controlling headlamp output light patterns and intensity.

59. As an example, independent claim 24 recites, in part, a system to:

> *determine coordinates corresponding to an[]other vehicle*, based on the coordinate-specific information;
> *select a cluster of the LEDs that emit light toward at portion of the other vehicle* based on the LEDs having emission aimings associated with the first coordinates; and
> *change emission* of the selected cluster of LEDs relative to emission of other LEDs not included in the cluster to create headlamp illumination that preserves a first level of illumination illuminating past the other vehicle *while preventing glare* to a driver of the other vehicle.

EX1035, Reexam Cert, 1:51-63.[2]

60. The dependent claims merely add known features: changing emissions including intensity, illuminating a road curvature; optical elements like lenses, tracking multiple vehicles, etc.

61. The ’551 patent’s system includes headlamp 270, controller 279, and sensors 280 on vehicle 271. EX1001, 51:65-54:18, FIG. 15. Headlamp 270 includes one or more clusters 276 (290), 281 (282), 285 (286), 287 (288, 289) of differently aimed solid-state light sources (SLSs) such as light-emitting diodes (LEDs) 275, 277, 278, 283, 284, respectively. EX1001, 53:8-56:49, FIG. 15.

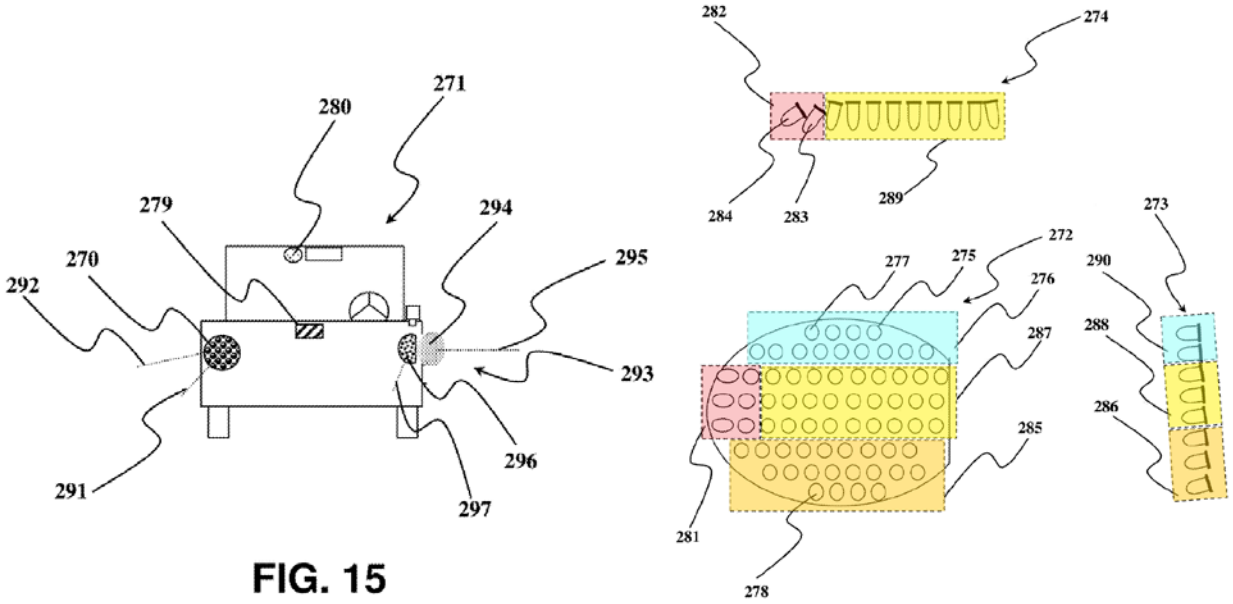

EX1001, FIG. 15 (annotated).

[2] Emphasis added throughout, unless noted.

62. The ’551 patent goes on and describes that controller 279 receives traffic data of oncoming vehicles from sensors 280 and determines the maximum illumination allowable for the traffic situation without blinding oncoming traffic. EX1001, 51:65-54:23, FIG. 15. But unsurprisingly, the ’551 patent’s specification leaves it to a POSA to determine the “predefined illuminance,” without describing an illuminance level, numerical value, algorithms, or control steps to achieve this. And a POSA would have readily incorporated multiple directional beam control and a predefined illuminance in an adaptive headlamp system, as demonstrated by the applied prior art. Such element (predefined illuminance) was well known and a POSA would have had no challenges in doing so.

B. Independent Claims 56, 64, 72, and 80

63. The independent claims recite patentably indistinct or substantially similar elements and concepts such that the same prior art disclosures are applicable to and map to corresponding elements across the independent claims. That is, even if the words used in a corresponding claim or corresponding claim feature are not exactly the same, the concepts, functions, and scope, are the same. And so the same prior art applies.

64. For example, each of the independent begins with seven identical structural elements. These elements include common structures like “a plurality of individually controllable LEDs,” “one or more processors,” “one or more sensors,”

and "a controller." The table below shows how these elements are identical, or for [40.5], patentably indistinct.

Table 1: Independent Claim Structural Elements

Independent Claim Structural Elements			
Claim 56	Claim 64	Claim 72	Claim 80
[56.P] An illuminating device having automatic control of light provided to an illuminated area comprising:	[64.P] An illuminating device having automatic control of light provided to an illuminated area comprising:	[72.P] An illuminating device having automatic control of light provided to an illuminated area comprising:	[80.P] An illuminating device having automatic control of light provided to an illuminated area comprising:
[56.1] a structure for incorporating illuminating device elements, wherein the structure comprises a motor vehicle;	[64.1] a structure for incorporating illuminating device elements, wherein the structure comprises a motor vehicle;	[72.1] a structure for incorporating illuminating device elements, wherein the structure comprises a motor vehicle;	[80.1] a structure for incorporating illuminating device elements, wherein the structure comprises a motor vehicle;

Independent Claim Structural Elements			
Claim 56	Claim 64	Claim 72	Claim 80
[56.2] a plurality of individually controllable LEDs incorporated in the structure via at least one headlamp mounted to the structure, each headlamp including at least one of the LEDs, the LEDs in communication with a power source;	[64.2] a plurality of individually controllable LEDs incorporated in the structure via at least one headlamp mounted to the structure, each headlamp including at least one of the LEDs, the LEDs in communication with a power source;	[72.2] a plurality of individually controllable LEDs incorporated in the structure via at least one headlamp mounted to the structure, each headlamp including at least one of the LEDs, the LEDs in communication with a power source;	[80.2] a plurality of individually controllable LEDs incorporated in the structure via at least one headlamp mounted to the structure, each headlamp including at least one of the LEDs, the LEDs in communication with a power source;
[56.3] electronic circuitry apparatus for the controlled powering of the LEDs and other of the illuminating device elements;	[64.3] electronic circuitry apparatus for the controlled powering of the LEDs and other of the illuminating device elements;	[72.3] electronic circuitry apparatus for the controlled powering of the LEDs and other of the illuminating device elements;	[80.3] electronic circuitry apparatus for the controlled powering of the LEDs and other of the illuminating device elements;
[56.4]one or more processors;	[64.4] one or more processors;	[72.4] one or more processors;	[80.4] one or more processors;

Independent Claim Structural Elements			
Claim 56	Claim 64	Claim 72	Claim 80
[56.5]one or more sensors, including one or more cameras, placed on the structure for detecting coordinate-specific information about the illuminated area, at least one of said cameras in communication with power, and in communication with at least one of the one or more processors;	[64.5] one or more sensors, including one or more cameras, placed on the structure for detecting coordinate-specific information about the illuminated area, at least one of said cameras in communication with power, and in communication with at least one of the one or more processors	[72.5] one or more sensors, including one or more cameras, placed on the structure for detecting coordinate-specific information about the illuminated area, at least one of said cameras in communication with power, and in communication with at least one of the one or more processors;	[80.5] one or more sensors, including one or more cameras, placed on the structure for detecting coordinate-specific information about the illuminated area, at least one of said cameras in communication with power, and in communication with at least one of the one or more processors

Independent Claim Structural Elements			
Claim 56	Claim 64	Claim 72	Claim 80
[56.6] a controller, including at least one of the one or more processors, integrated with the structure via mounting, in communication with the LED controlling power electronic circuitry apparatus, said controller arranged to process the information communicated from the cameras and to automatically control the light provided to the illuminated area; and	[64.6] a controller, including at least one of the one or more processors, integrated with the structure via mounting, in communication with the LED controlling power electronic circuitry apparatus, said controller arranged to process the information communicated from the cameras and to automatically control the light provided to the illuminated area; and	[72.6] a controller, including at least one of the one or more processors, integrated with the structure via mounting, in communication with the LED controlling power electronic circuitry apparatus, said controller arranged to process the information communicated from the cameras and to automatically control the light provided to the illuminated area; and	[80.6] a controller, including at least one of the one or more processors, integrated with the structure via mounting, in communication with the LED controlling power electronic circuitry apparatus, said controller arranged to process the information communicated from the cameras and to automatically control the light provided to the illuminated area; and
[56.7] memory storing instructions that, when executed by one or more processors of the controller, enable the controller to:	[64.7] memory storing instructions that, when executed by one or more processors of the controller, enable the controller to:	[72.7] memory storing instructions that, when executed by one or more processors of the controller, enable the controller to:	[80.7] memory storing instructions that, when executed by one or more processors of the controller, enable the controller to:

65. The remaining elements of the independent claims are instructions that operate the processor to perform certain steps. These instructions use varied

terminology and order to recite the same, basic three-step process: (1) detect other vehicle in the traffic using the sensors; (2) select a cluster of LEDs that illuminates the detected vehicle in the traffic; (3) adjust the light emissions of the selected cluster of LEDs (e.g., by reducing their light intensity) to prevent glare of the detected vehicle in the traffic. Certain independent claims also recite maintaining the track the target vehicle as it moves relative to the headlight (e.g., claim 72), or performing this three-step process for multiple clusters (e.g., claim 64). But, these are unpatentable differences that are a simple variation of the three-step process I outline here.

C. Prosecution History Summary

66. I understand that Patent Owner requested reexamination of the ’551 patent by submitting original claim 6 for reexamination over a pair of prior art references. EX1002, 0035-37. I also understand that Patent Owner at the same time added 64 new claims. EX1002, 0035-37, 0568-589. The Office instituted reexamination for claim 6 only, and issued a single non-final Office Action, which rejected claim 6 over the art, and interpreted “electronic circuit[ry] apparatus” as a means-plus-function element. EX1002, 0929-939. Patent Owner canceled claim 6 and argued against the claim interpretation. EX1002, 0965-967. The Office allowed the new claims and rejected Patent Owner’s traversal of the interpretation of “electronic circuitry.” EX1002, 0973-980.

D. Level of Ordinary Skill in the Art

67. A POSA at the time of the alleged invention would have had a bachelor's degree (B.S.) in mechanical engineering, electrical engineering, optical engineering, applied physics, or an equivalent field, as well as at least 2 years of industry experience in the area of automotive lighting and lighting-control systems. The POSA may work as part of a team, for example, with computer engineers to integrate, program, etc., controllers and various control inputs to affect control of a given light source.

E. Claim Construction

68. As above, I understand that during an *inter partes* review proceeding, claims are to be construed in light of the specification as would be read by a POSA at the time of the purported priority date. In my opinion, none of the claim terms require a specific construction, and I apply the plain and ordinary meaning of each claim term I discuss in this declaration.

1. "electronic circuitry apparatus for the controlled powering of the LEDs"

69. I understand that during reexamination, the Office interpreted this term (found in all of the independent claims) as a means-plus-function element, and identified exemplary corresponding structure as "logic control electronics unit 7." EX1002, 0929-939; EX1001, 25:30-52. Under any construction, this term is unpatentable, and I discuss both the plain and ordinary meaning and the

alleged means-plus-function construction below. If the Board interprets this term as a means-plus-function element, the Office's identified structure or equivalent—e.g., the '551 patent's "logic control electronics unit 7," EX1001, 25:30-52—is disclosed by the prior art.

IX. OVERVIEW OF APPLIED REFERENCES

A. Ground 1 – Beam and Satonaka

1. U.S. Patent No. 6,144,158 to Beam

70. Beam discloses automotive adaptive anti-blinding headlights (AABH) that control the intensity and angular position of one or more narrow microbeams. EX1005, Abstract. Beam's AABH system detects headlights/taillights of vehicles ahead, and adjusts the headlight to provide significantly reduced illumination in certain areas, protecting the vision of other drivers. EX1005, 4:9-25, FIG. 1. Sensor 107 inputs data to controller 108, which controls illuminator 109. EX1005, 4:9-25, FIG. 1.

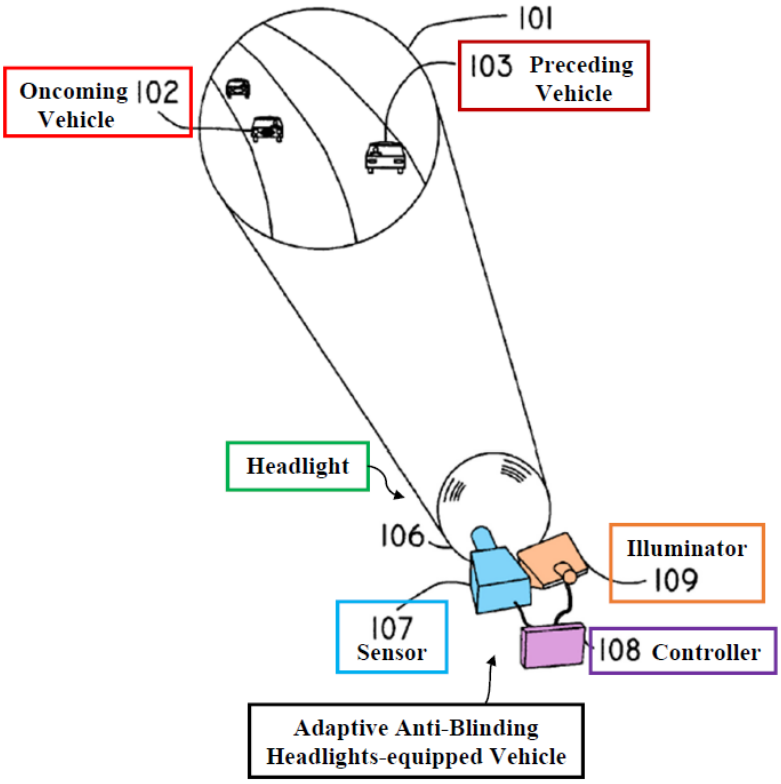

EX1005, FIG. 1 (annotated).

71. Beam uses the term "microbeam," as light emitted from a "microbeam source," which includes "*individual, controllable, light-emitting diodes*" (LEDs). So, for clarity, when I refer to Beam's system and its LEDs, a POSA would have understood that all instances of "microbeam" in Beam's disclosure correlate with "*individual, controllable, light-emitting diodes (LEDs)*." Relatedly, as Beam uses the term "source," a POSA would have understood that the term "source" may include not only the *emitter* but also may include lenses/optics, packaging, etc.

72. Beam's LEDs are therefore controllable in direction, pattern, intensity, etc.—all with the purpose of providing enhanced safety to the driver

and others. EX1005, 3:8-44; 6:53-7:13. Because headlamps are critical safety features in the motor vehicle, the overarching purpose of providing enhanced safety to the driver and others (whether in other vehicles, or pedestrians, etc.) makes sense—any additional features or elements that improve safety would have been a focus of a POSA.

73. Beam's controller 108 uses imaged data from sensor 107 to determine a particular area (or section) of microbeams to be reduced. EX1005, 4:26-59, FIGS. 2, 5. Rays from lamp 202 fall on and are reflected or blanked (attenuated) by spatial light modulator 203 mounted on support 204 to produce an overall beam pattern comprising many individually, differently aimed microbeams. EX1005, 4:26-59, FIGS. 2, 5.

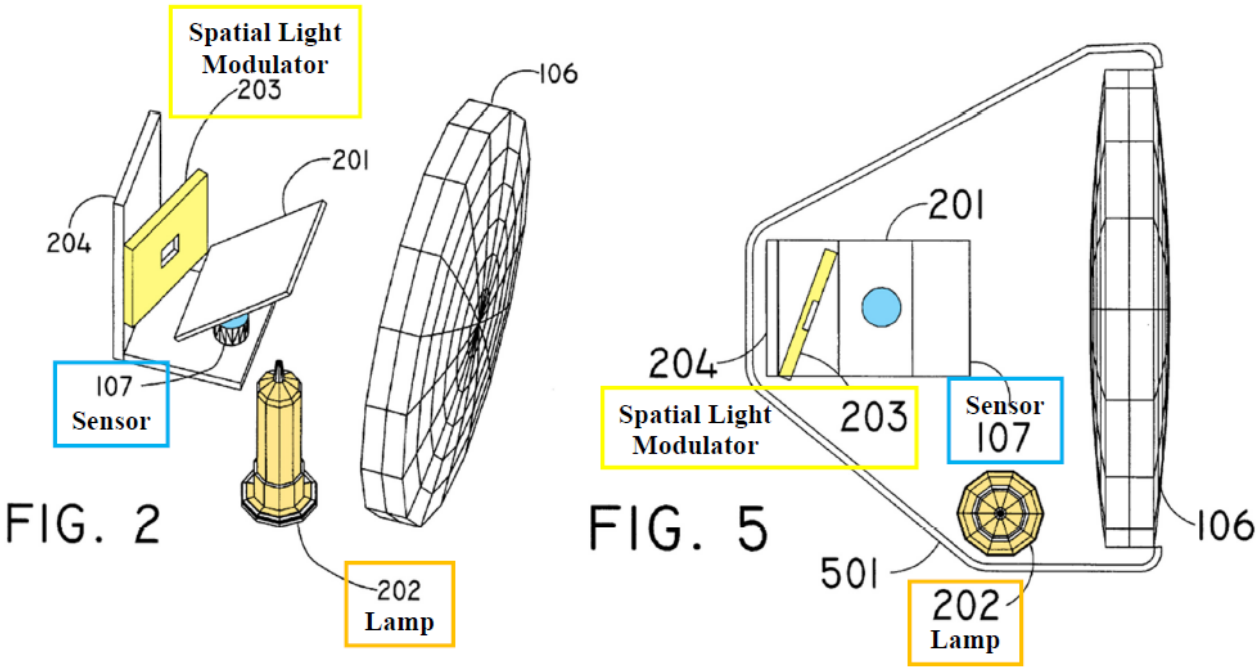

EX1005, FIGS. 2 and 5 (annotated).

74. As explained, Beam's microbeams are arranged in an X-Y matrix and the intensity and angular position of each microbeam are independently controlled. EX1005, 4:26-59, FIGS. 2, 5. Controller 108 selectively reduces illumination of microbeams falling on a particular object or objects, which commands spatial light modulator 203 in illuminator 109 to either divert or attenuate the selected microbeams. EX1005, 4:26-59, FIGS. 2, 5.

75. As shown in the annotated figures below, Beam's system automatically provides the illumination with significantly reduced intensity, represented by shaded dark areas, to specific vehicle areas in circles 104, 105 where the light from the system is being projected to, for the purpose of *reducing blinding* of drivers of oncoming/preceding vehicles 102, 103—*while retaining high intensity illumination in unshaded areas*. EX1005, 2:53-3:3, 4:9-25, FIGS. 1C-1D.

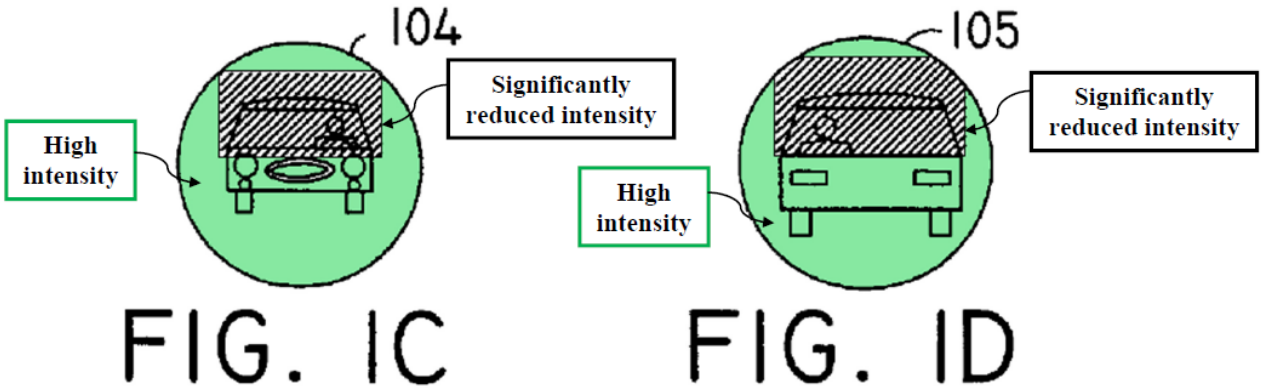

EX1005, FIGS. 1C and 1D (annotated).

76. Beam's AABH system does this via an optical system 106, sensor 107 (e.g., camera), controller 108, and illuminator 109. EX1005, 4:9-25. Data from sensor 107 are input to controller 108, thereby controlling illuminator 109 to illuminate an area 101. EX1005, 4:9-25.

77. Beam explains:

> *When an oncoming vehicle's headlights are detected* (whether or not it is equipped with the AABH system), *an area slightly wider than the headlight spacing and approximately six feet high, and whose bottom edge is centered on the oncoming headlights, is dimmed in the beam-bundle of the vehicle equipped with the AABH system*. As the positions of both vehicles move, the *blanked area tracks the location of the oncoming vehicle, dynamically varying in position and in size*.

EX1005, 6:19-27, 5:46-54; *see also* EX1005, 2:59-3:3, 4:10-25.

78. And in the example with reference to Figures 2 and 5, controller 108 selectively commands reduction of illumination of microbeams falling on a particular object or objects, which commands spatial light modulator 203 in illuminator 109 to either divert or attenuate the selected microbeams. EX1005, 5:46-54; *see also* EX1005, 2:59-3:3, 4:10-25, 8:4-17 (explaining that the microbeams may be from LEDs).

2. Japanese Patent Publication No. H7-101291 to Satonaka

79. Satonaka discloses an adaptive vehicle headlamp system that changes the headlight's brightness for illumination direction and range for either

high beam and/or low beam based on detection of other proceeding and oncoming vehicles in traffic. EX1014, ¶¶7-11. Satonaka's headlamps 18 and 20 are controlled by a control device 50 having memory and processing capabilities. EX1014, ¶¶16-17, 21-22. A camera 22 is connected to the controller via a separate image processing device 48. EX1014, ¶22.

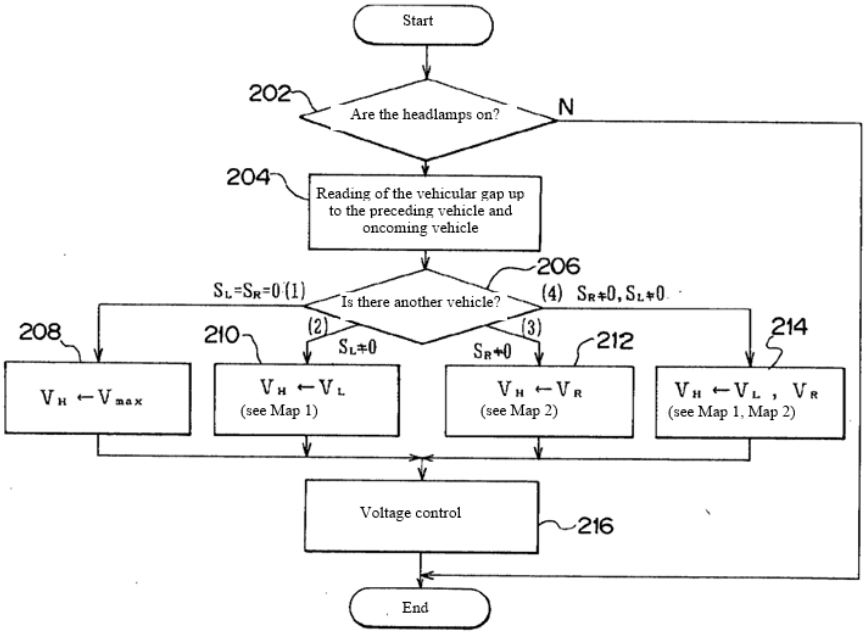

EX1014, FIG. 6.

80. Satonaka discloses a detailed algorithm by which controller 50 determines which lighting mode to activate. EX1014, ¶¶25-38. An image taken by camera 22 is processed by first determining the position of roadway markings (so-called "white lines") by examining each image pixel for a specific brightness. EX1014, ¶¶25-29. Each pixel has an x-y coordinate, which enables

the definition of a "vehicle recognition area Wp" bounded by the detected white lines and a preset lower bound. EX1014, ¶29.

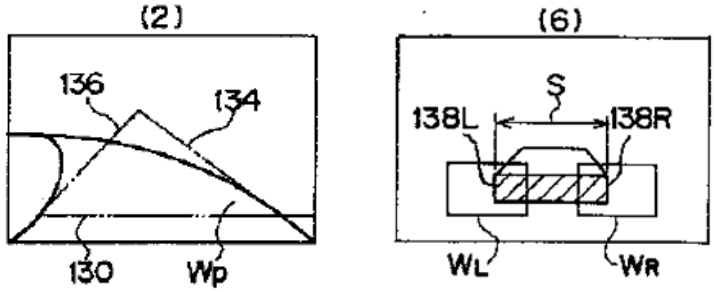

EX1014, FIG. 4 (2), (6) (excerpt).

81. The pixels in area Wp are then processed to determine if a vehicle is present by comparing the values of each pixel to a predetermined value. EX1014, ¶¶30-31. The system then determines the width "S" of the vehicle based on the processed pixels, and uses that width to determine the distance between the headlamps and either the proceeding or oncoming vehicle. EX1014, ¶¶32-33. Based on this distance, the controller then activates the required lighting to prevent glare on the other vehicle drivers and improve driver's visibility while no other vehicles are detected. EX1014, ¶¶35-45.

B. Ground 2 – U.S. Patent No. 6,049,749 to Kobayashi with Beam-Satonaka

82. Kobayashi discloses a motor vehicle system (e.g., lighting device) that controls shaping of light (e.g., changing an "irradiating" or "illumination" direction, range, shape, etc.) based at least in part on map data/information, including GPS data and navigation beacon data. *See* EX1008, Abstract, 1:10-63.

83. Kobayashi's ECU 10 receives input "from GPS navigation device 29, steering sensor 13, vehicle speed sensor 14, direction indicating switch 15, and automatic control changeover switch 16." EX1008, 17:8-15; *see also* EX1008, FIGS. 1, 6, 10:1-11:4. "GPS navigation device 29 corresponding to the road profile calculating means 2 includes: GPS receiving section 32, gyrosensor 33, calculating section 34, guide route setting section 35, map information output section 36, and display section 37." EX1008, 17:16-20.

FIG. 12

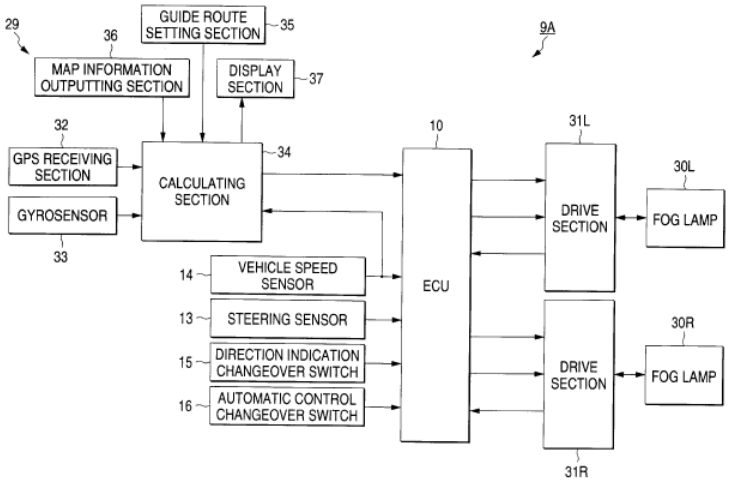

EX1008, FIG. 12.

FIG. 1

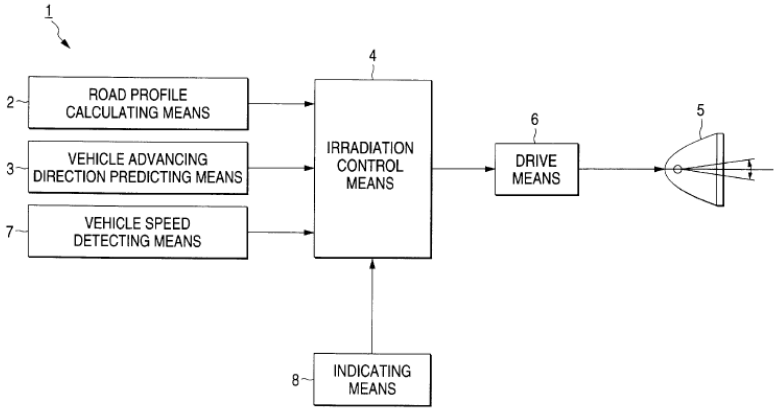

EX1008, FIG. 1.

FIG. 6

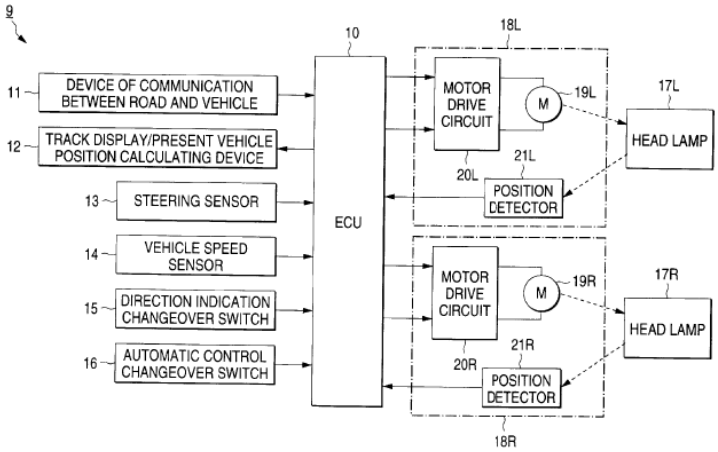

EX1008, FIG. 6.

84. GPS navigation device 29 sends information about the road profile and the present vehicle position to ECU 10. EX1008, 17:39-40. In turn, output signals of ECU 10 are sent to drive sections 31L, 31R of the fog lamps 30L, 30R (which are head lamps) that are arranged at the left and right front portion of the vehicle, respectively. EX1008, 17:39-40, FIGS. 1, 6, 12, 3:9-20. ECU 10

processes information in Figure 12 in substantially the same way as that of Kobayashi's Figure 9 example. *See* EX1008, 11:34-14:52 (including representative lookup tables); *see also* EX1008, 17:41-50, FIG. 9.

FIG. 9

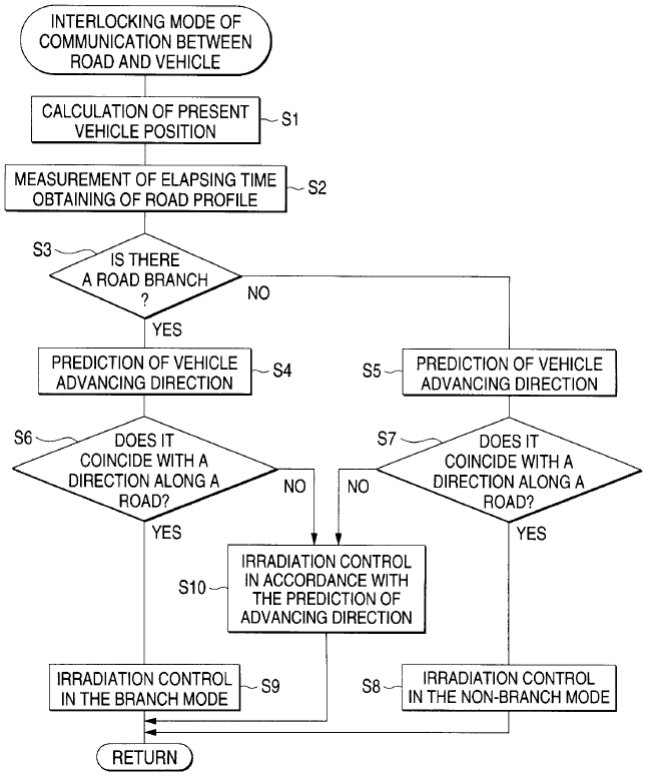

EX1008, FIG. 9.

85. Figure 12 uses map data (e.g., by GPS navigation device 29) as the method of obtaining information, to implement the more general system diagram in Figure 1. EX1008, 17:44-50. And a scheduled course of the vehicle which is set by the guide route setting section 35 is fed to the prediction of the vehicle advancing direction in steps S4 and S5. EX1008, 17:44-50.

86. Kobayashi's road profile calculating means 2 (using map data such as GPS data) and vehicle advancing direction predicting means 3 cooperate with control means 4 to alter the direction/shape/intensity of headlamp 5. EX1008, 3:9-50, FIG. 1. Kobayashi discloses whole or partial directional control, including via portions of the lighting device or plurality of components composing the lighting device, e.g., reflecting mirrors, plurality of lighting devices, etc. *See generally* EX1008, 6:4-62.

87. Kobayashi's system responds to real-world conditions—multiple curves, intersections, etc. As an example, Figure 10 shows that the illumination control (including shaping/reshaping light and directionality) of vehicle K can be planned and controlled on curved roads r1 and R1 with the driver's line of sight to improve safety. For example, when vehicle K turns to the left (point A), the left shoulder is illuminated (the shape is adjusted towards the left shoulder), and when vehicle K turns to the right on a subsequent curve (point C), the right shoulder is illuminated (the light is reshaped towards the right shoulder). EX1008, 14:53-15:28. While Figure 10 is described in more detail relating to beacons 27 and 28, the GPS and other map data are also accounted for in ECU 10. *See also* EX1008, FIG. 12, 17:3-18:67. Moreover, a POSA would have understood that the beacons 27 and 28 also convey map data, e.g., as road profile information.

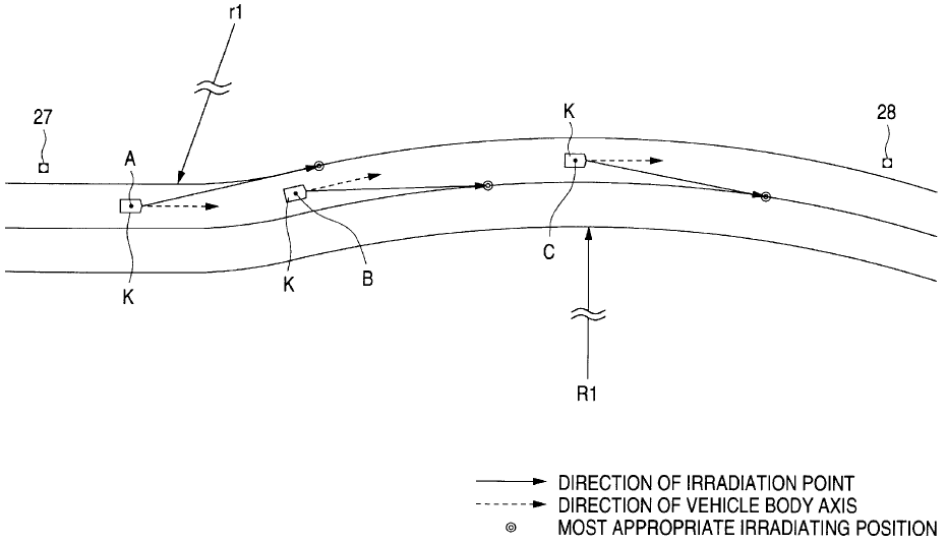

EX1008, FIG. 10.

C. Ground 3 – Karlsson and Nakamura

1. WIPO Patent Publication No. 1998/054030 to Karlsson

88. Karlsson discloses a headlight having spotlight beams and sensors to detect oncoming traffic and automatically control a lighting pattern to reduce blinding of oncoming traffic. EX1010, Abstract, 2:30-35.[3] Lighting device 24 provides light beam 7 controlled by light source 2, light modulator means 3, and control means 14 based on light detected by sensor 9, 23, whose intensity and pattern are optimally adapted to the road and prevent glaring. EX1010, 9:18-26, FIG. 3.

[3] In this declaration, for Karlsson, I use page:line citation format.

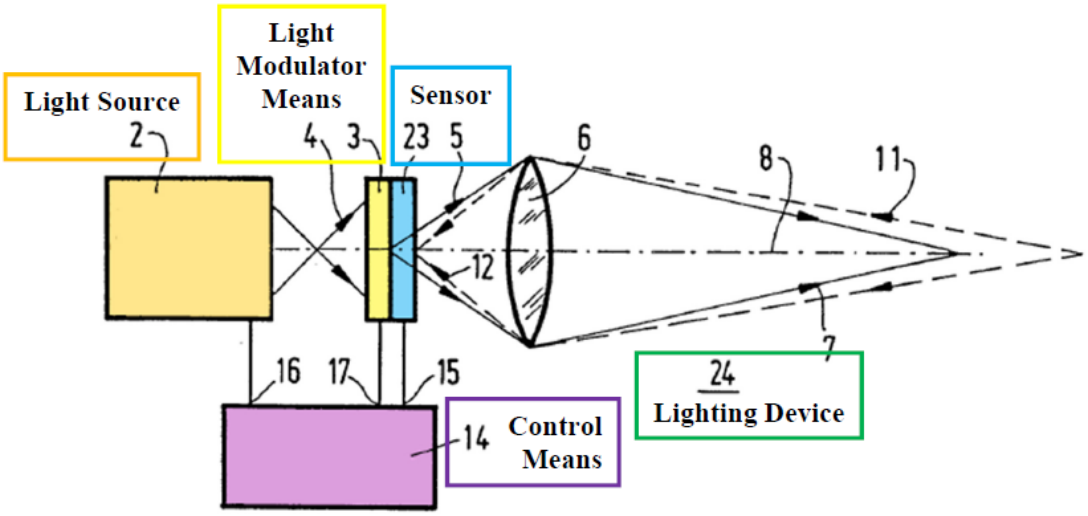

EX1010, FIG. 3 (annotated).

89. Lighting device 24 includes a plurality of controllable spotlight beams for forming light beam 7. EX1010, 13:24-14:4, FIG. 6. Spotlight beams 34 are obtained by light source 2 composed of a grid of separate light sources, such as LEDs, controlled individually or in groups. EX1010, 13:24-14:4, FIG. 6.

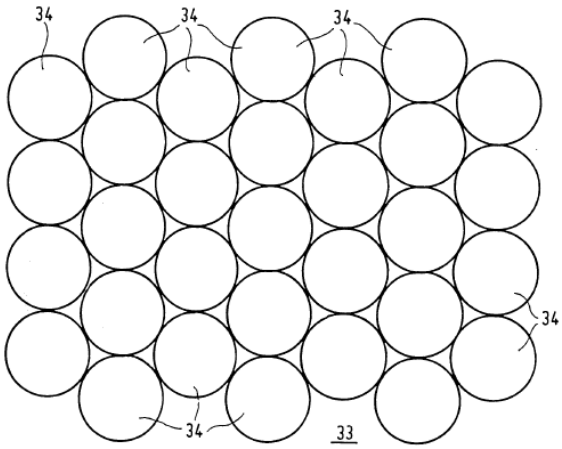

FIG. 6

EX1010, FIG. 6.

90. Karlsson's automotive headlights (headlamps) include LEDs that are automatically controlled in direction and/or intensity. In an example, sensors detect oncoming traffic and a lighting pattern of the LEDs is automatically changed to reduce blinding of oncoming traffic. EX1010, Abstract. Karlsson's lighting device automatically varies an LED pattern in an efficient manner and with maximum sensitivity in response to control signals delivered by light-sensitive sensors. EX1010, 2:30-35, FIG. 3.

91. The spotlight beams (from LEDs) are controlled such that patterns of the emitted light beam are automatic and responsive to inputs. EX1010, 13:24-14:4. Switching one or more LEDs on or off or adjusting the intensity of the light emitted provides a desired pattern and intensity. EX1010, 13:24-14:4; *see also* EX1010, FIG. 3. Karlsson's spotlight beams 34 can be provided by a light source 2 composed of a grid of separate LEDs, which can be controlled individually or in groups. EX1010, 13:24-14:4; *see also* EX1010, FIG. 3. The headlight includes a spatial distribution of LEDs (D, I, and D/I) and spotlight sensors S. EX1010, 19:18-20:3, FIGS. 6, 14. The resulting emitted light beam 50 is represented as a window that can shift in the plane from left to right and from top to bottom and produced by LEDs based on the data from inputs, e.g., data sensed from spotlight sensors S. EX1010, 19:18-20:3, FIGS. 6, 14.

92. Emitted light beam 50 shifts in the plane from left to right and top to bottom, produced by spotlight sources D (dipped light), I (main-beam light), and D/I (dipped and main-beam lights) based on data from spotlight sensors S. EX1010, 19:18-20:3, FIG. 14.

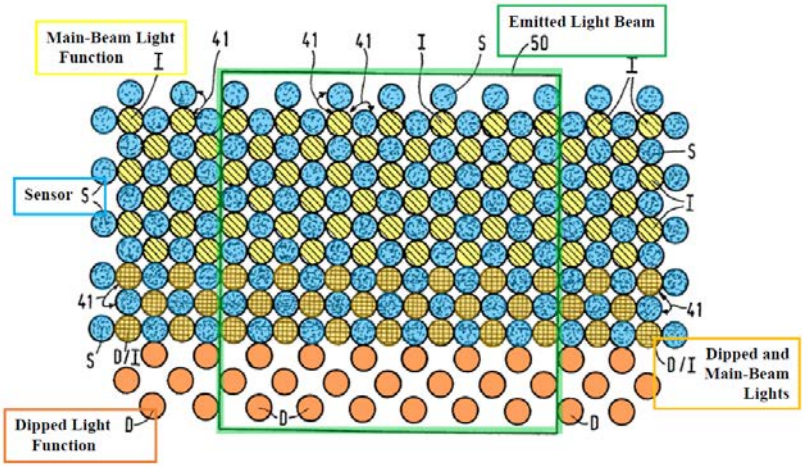

EX1010, FIG. 14 (annotated).

93. Processor-controlled control means 14 is synchronized to light source 2, light modulator means 3, and sensor 23 to produce adaptive light beam 7, 50. EX1010, 20:12-32, 21:36-22:4, FIG. 15.

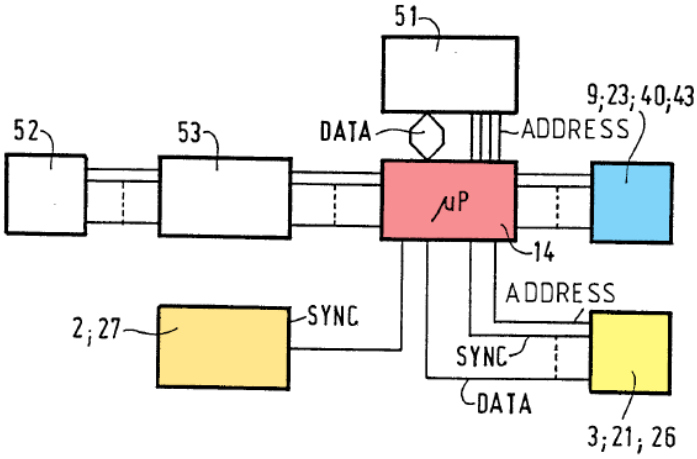

EX1010, FIG. 15 (annotated).

2. Japanese Patent Publication No. JPH07-65603 to Nakamura

94. Nakamura also discloses an automatic vehicle headlamp system that reduces glare and tracks changing road conditions. EX1013, ¶¶7-10. Nakamura uses control apparatus 50 "for the control of the distribution of light from headlamps 18 and 20." EX1013, ¶24. An "actuator 86 is anchored onto the [vehicle] frame" and is connected to a "needle 86A" such that actuator 86 can move needle 86A in the left-right direction of the vehicle. EX1013, ¶¶20-21. Needle 86A is anchored to the rear of headlamp 18, and thus headlamp 18 can be aimed to the left or to the right by actuator 86, which is controlled by control apparatus 50. EX1013, ¶¶19-20. The headlamp structure also includes an "actuator 88" that connects to "rack part 88A" via a "pinion 88B" that is also controlled by control apparatus 50. EX1013, ¶21. Movement of rack part 88A alters the vertical orientation of a "shade 44S" that is positioned inside of headlamp 18, which controls the vertical extent of the illumination from headlamp 18. EX1013, ¶21. Headlamp 20 has corresponding structure. EX1013, ¶22.

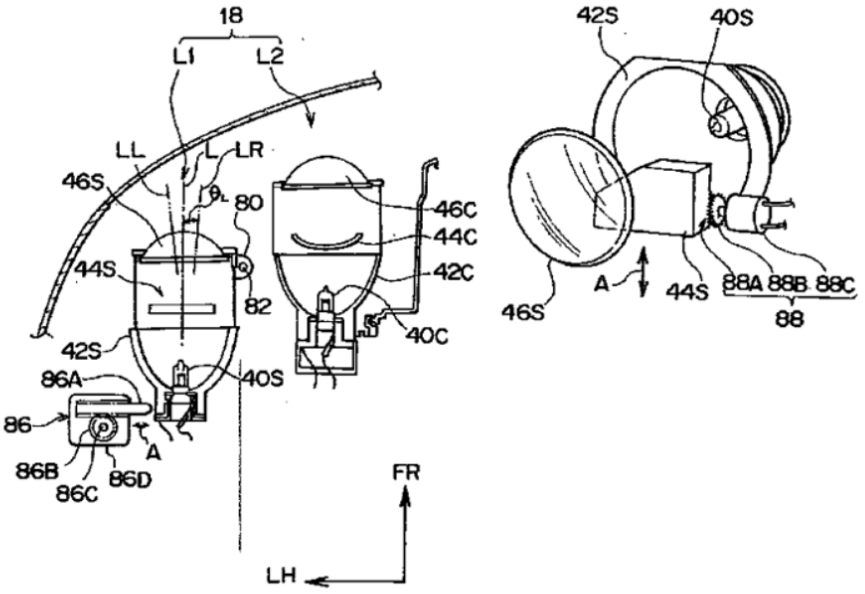

EX1013, FIG. 2.

95. Nakamura's control apparatus 50 receives several different inputs to determine an appropriate light illumination pattern. EX1013, ¶¶25-45. A first variable is a "deviation angle φ" is a measure of the deviation between the straight-forward direction of the vehicle and an estimate of where the driver is looking based on an image-based detection of a road curvature. EX1013, ¶¶27-33. An example of this angle is shown below. Nakamura's system uses the actuators described above to move the beams of light from headlamps 18 and 20 by deviation angle φ to illuminate the road. EX1013, ¶33.

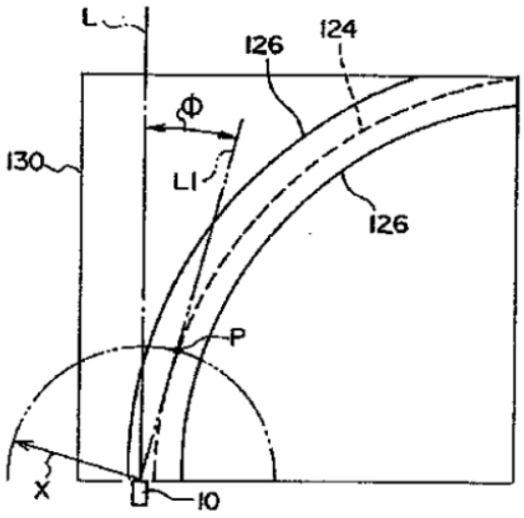

EX1013, FIG. 9.

96. Nakamura also discloses a detection system for other vehicles as part of an anti-blinding (glare control) system. EX1013, ¶¶34-48. An image processing apparatus 48 processes signals from camera 22 to detect other vehicles. EX1013, ¶¶34-48. An image taken by camera 22 is processed by first determining the position of roadway markings (so-called “white lines”) by examining each image pixel for a specific brightness. EX1013, ¶¶35-37. Each pixel has an x-y coordinate, which enables the definition of a “vehicle recognition region Wp” bounded by the detected white lines and a preset lower bound. EX1013, ¶37.

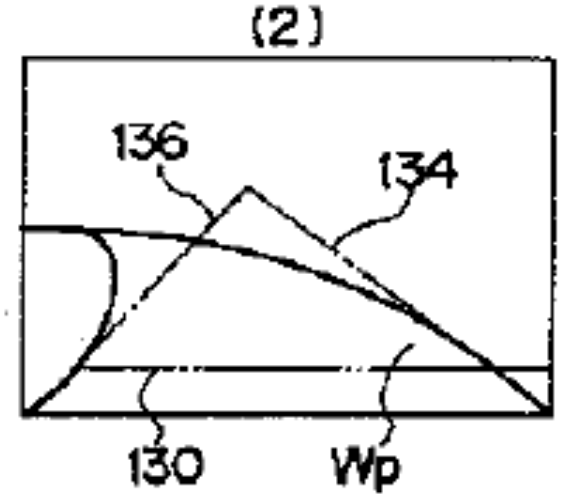

EX1013, FIG. 10 (2).

97. The pixels in area Wp are then processed to determine if a vehicle is present by comparing the values of each pixel to a predetermined value. EX1013, ¶¶40-42. The system then determines the width "S" of the vehicle based on the processed pixels, and uses that width to determine the distance between the headlamps and either the proceeding or oncoming vehicle. EX1013, ¶¶42-46 Based on this distance, the controller then activates the required lighting to prevent glare of the other vehicle drivers. EX1013, ¶¶45-47.

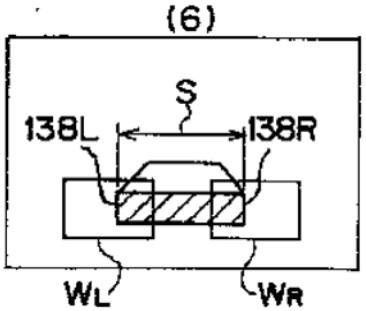

EX1013, FIG. 10, (6).

D. Ground 4 - Gotou with Karlsson-Nakamura

98. Gotou's headlight direction can be adjusted based on map data from GPS. EX1012, Abstract, 1:6-47, 1:51-59, 3:24-4:49, 8:9-41. Gotou compares systems using steering wheel-based directional control, EX1012, 1:21-29, with navigation system control, EX1012, 1:30-40. When "a *curved part* or the like is *foreseen in advance in reference to both map information of the navigation system* and information of the proper or subject vehicle position on the map, and the lighting region is changed *before* entering the *curved part.*" EX1012, Abstract, 1:6-47, 1:51-59, 3:24-4:49, 8:9-41.

FIG. 2

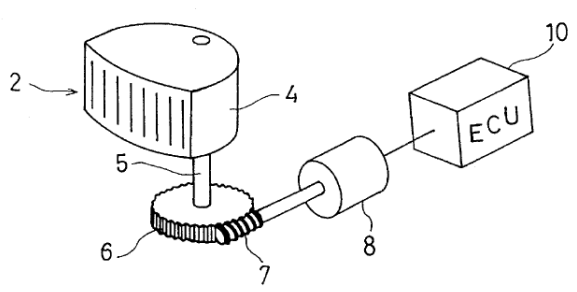

EX1012, FIG. 2.

99. Navigation system 30 sends map data to light distributing control ECU 10, which controls light shaping from the headlampsa. EX1012, 3:52-62. Gotou provides additional details of the navigation system 30, including the GPS receiver 34, e.g. EX1012, 4:1-29.

100. Light distribution control ECU 10 receives additional inputs, such as turn switch 11, steering angle sensor 12, vehicle speed sensor 13, etc. *See* EX1012, 3:52-67. ECU 10 processes the information and signals to determine an optical axis angle θ, and outputs a signal to motor driver 14 to achieve the optical axis angle θ. EX1012, 3:62-67, FIG. 4.

FIG.4

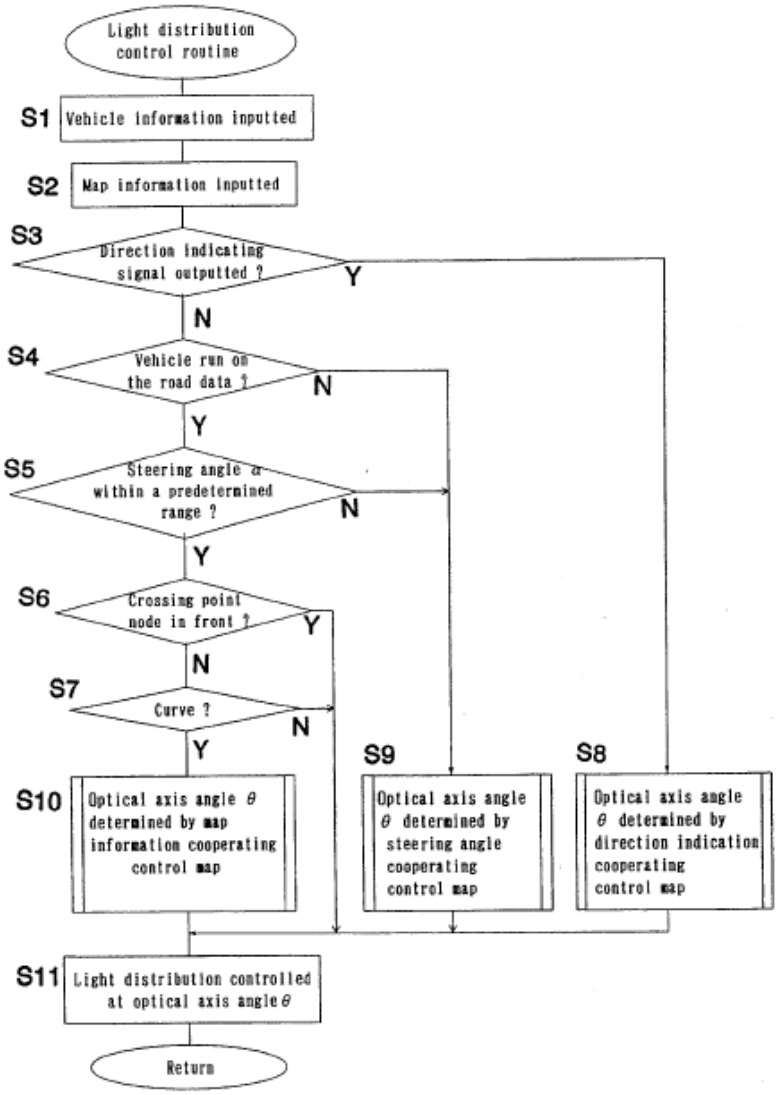

EX1012, FIG. 4.

X. GROUND 1: BEAM AND SATONAKA RENDER OBVIOUS CLAIMS 56, 57, 62-65, 70-73, 78-81 , AND 86-87

101. It is my opinion that Beam explicitly or implicitly discloses every feature recited in claims 56, 57, 62-65, 70-73, 78-81 , and 86-87. However, to avoid doubt, Beam is combined with Satonaka for [56.5]/[64.5]/[72.5]/[80.5], which require coordinates/coordinate-specific information be collected by the sensors and determined by the controller. As Satonaka demonstrates, the use of coordinates to identify the position of a detected vehicle was well known, and thus these claims are at least obvious.

102. Beam's adaptive headlight system detects oncoming traffic and dims a portion of the headlight beam to prevent glare. EX1005, 4:9-25; Section IX.A.1. Beam "sens[es] the presence and *location* of headlights and taillights ahead of the car on which it [Beam's system] is mounted." EX1005, 2:53-56. Beam's controller 108 receives an image from sensor 107 that is formed with pixels, and "uses appropriate algorithms on the incoming data to determine the [pixel] *locations* to be blanked, and stores them in memory 1106." EX1005, 5:33-48. Beam further discloses "determining the coordinates of said oncoming or following vehicle." EX1005, 8:27-28. Thus, Beam discloses receiving an image in the form of an array of pixels, and processing those pixels to determine which area of the image contains a vehicle (and, thus, which area should be "blanked" in Beam's terms). Beam explains how each pixel is *selected* in a

process involving "clock generator 1102" producing a line clock and dot clock used to select the pixel to be processed. EX1005, 5:33-44.

103. If Patent Owner argues that Beam does not explicitly disclose determining and storing coordinates, it would have been obvious to modify Beam to do so in view of Satonaka. Satonaka's adaptive headlight system detects vehicles by processing an "image 120…that was obtained by camera 22." EX1014, ¶26. "Each pixel … identifies a position based on the *coordinates* (X_n, Y_n)." EX1014, ¶25. Satonaka details a multi-step algorithm by which the pixels are processed to determine (1) the boundaries of the roadway, and (2) the location of a vehicle in the roadway. EX1014, ¶¶25-44; Thus, Satonaka discloses that the pixels are each associated with a coordinate system (here, an X, Y system) to plot the location of traffic.

A. A POSA would have been motivated to combine Beam and Satonaka with a reasonable expectation of success.

104. Beam and Satonaka are from the same technical field—adaptive vehicle headlight systems. EX1005, 3:8-45, 6:53-7:13; EX1014, ¶¶7-11. Beam's adaptive headlight system detects oncoming traffic and dims a portion of the headlight beam to prevent glare. EX1005, 4:9-25; Section V.A. Beam "sens[es] the presence and *location* of headlights and taillights ahead of the car on which it [Beam's system] is mounted." EX1005, 2:53-56. Beam's controller 108 receives an image from sensor 107 that is formed with pixels, and "uses

appropriate algorithms on the incoming data to determine the [pixel] locations to be blanked, and stores them in memory 1106." EX1005, 2:53-56, 5:33-48. Beam further discloses "determining the coordinates of said oncoming or following vehicle." EX1005, 8:27-28. Thus, Beam discloses receiving an image in the form of an array of pixels, and processing those pixels to determine which area of the image contains a vehicle (and, thus, which area should be "blanked" in Beam's terms). Beam explains how each pixel is *selected* in a process involving "clock generator 1102" producing a line clock and dot clock used to select the pixel to be processed. EX1005, 5:33-44.

105. If Patent Owner argues that Beam does not explicitly disclose determining and storing coordinates, it would have been obvious to modify Beam to do so because of determining and storing coordinates was well known. For example, a POSA would have searched for references that disclose how pixel locations are *stored* in memory—a well-known image processing technique—such as disclosed in Satonaka. Satonaka's adaptive headlight system detects vehicles by processing an "image 120…that was obtained by camera 22." EX1014, ¶26. "Each pixel … identifies a position based on the *coordinates* (X_n, Y_n)." EX1014, ¶25. Satonaka details a multi-step algorithm by which the pixels are processed to determine (1) the boundaries of the roadway, and (2) the location of a vehicle in the roadway. EX1014, ¶¶25-44. Thus, Satonaka

discloses that the pixels are each associated with a coordinate system (here, an X, Y system) to plot the location of traffic.

106. If Patent Owner argues that Beam does not explicitly disclose producing and storing coordinates with its images, it would have been obvious to a POSA to modify Beam's algorithm to include the coordinates of the pixels as taught by Satonaka. This would have expressly provided the algorithm details that already exist implicitly in Beam's system, therefore allowing the position of the headlights to be determined based on the coordinates of the pixels that are processed per Beam's algorithm to determine the locations to be "blanked." EX1005, 5:33-44. This modification only involves basic programming changes to the algorithm stored on Beam's memory, not changes to Beam's physical components.

107. Beam "*automatically sens[es] the presence and location* of headlights and taillights ahead of the car on which it is mounted." EX1005, 2:53-56. Beam uses that location to "determine which microbeams must be reduced in intensity to protect the other drivers." EX1005, 4:16-19. "To accomplish this, the *spatial* locations (a POSA would have understood that spatial locations are defined per coordinates) of the sources are *mapped into controller 108*." EX1005, 4:53-57. Thus, Beam relies on the location of the

detected sources to determine the proper light sources to attenuate to prevent glare.

108. Satonaka's algorithm uses coordinates to quantify the spatial locations of detected headlights in a similar system. *See* Section IX.A.2; EX1014, ¶¶25-44. Like Beam, Satonaka's system detects headlights and processes the resulting camera image to determine the location of those headlights using X,Y coordinates for each pixel. EX1014, ¶¶25-44; EX1005, 4:9-59, 5:29-54. Thus, in view of Satonaka, a POSA would have found the explicit details that are implicit in Beam.

109. This modification would also have been a simple combination of known elements in the prior art: Beam's system and Satonaka's coordinate-based pixel mapping method. Similarly, this modification would also have been the use of a known technique (Satonaka's coordinate teachings) to improve a similar system (Beam's AABH). This combination would have had the predictable result of providing the algorithm details implicit in Beam's system from Satonaka's known technique of mapping pixels using coordinates. Satonaka's coordinate teachings would have predictably allowed each of Beam's pixels to be identified by location, and, correspondingly, allow each target vehicle to be identified by spatial coordinates. This would further ensure Beam accurately "tracks the location of the oncoming vehicle, dynamically

varying in position and in size," improving illumination quality and safety for drivers. EX1005, 6:24-27.

110. A POSA would have had a reasonable expectation of success performing this modification. A POSA would have understood *how* to combine the teachings of Beam and Satonaka, for example, by simply modifying software instructions stored in memory of Beam's controller/processor in view of Satonaka. This modification requires no physical changes, only basic programming changes, which would have been well within the skill of a POSA. Additionally, both Beam and Satonaka use the same basic architecture—a camera connected with processing circuitry and memory—and Satonaka provides details of how to implement the coordinate mapping of its pixels. EX1005, 5:33-52; EX1014, ¶¶22, 27. This would have provided a POSA with an easily applicable example (from Satonaka) to be implemented on a structurally similar system (Beam).

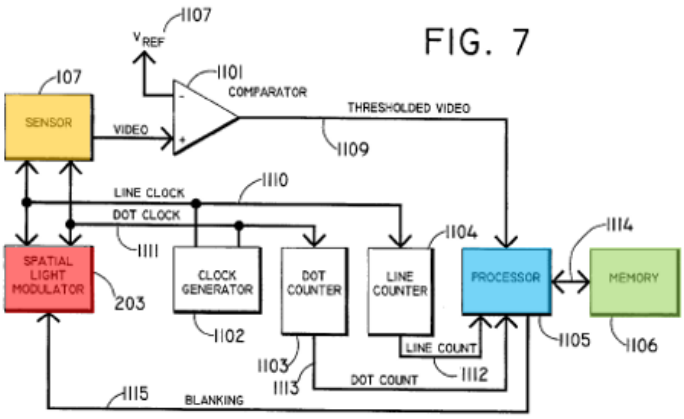

Beam

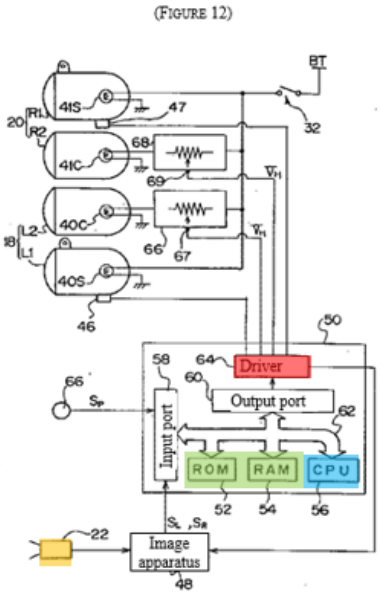

Satonaka

EX1005, FIG. 7 (annotated); EX1014, FIG. 12 (annotated)

B. Independent Claim Structural Elements

111. Each independent claim recites "an illuminating device" with several identical or patentably indistinct structural elements, including "memory storing instructions." The only differences between these claims are the stored instructions—and even the instructions recite similar or patentable indistinct elements. The structural elements are treated together below.

1. [56.P]/[64.P]/[72.P]/[80.P][4] "An illuminating device having automatic control of light provided to an illuminated area comprising"

112. Beam discloses "a method and apparatus for automatically reformatting the pattern of a [headlight] beam from a light source to prevent it from illuminating certain areas in the vicinity of a light forward of it." EX1005, 1:5-9. Beam's "illuminator 109…projects the light through optical system 106 to illuminate an area shown as 101." EX1005, 4:18-21, 1:20-21; 5:3-16.

[4] Appendix A compares claims treated together. For identical claim language, I only include the text of the first claim/claim element in the header throughout this declaration. I include all claim language in Appendix B for reference. Furthermore, I understand from counsel that Patent Owner has filed a request to correct several typographical errors in the claims, and that this request remains pending as of the date I signed this declaration. I reserve the right to update my opinion to the extent that the request is approved and the claim language changes.

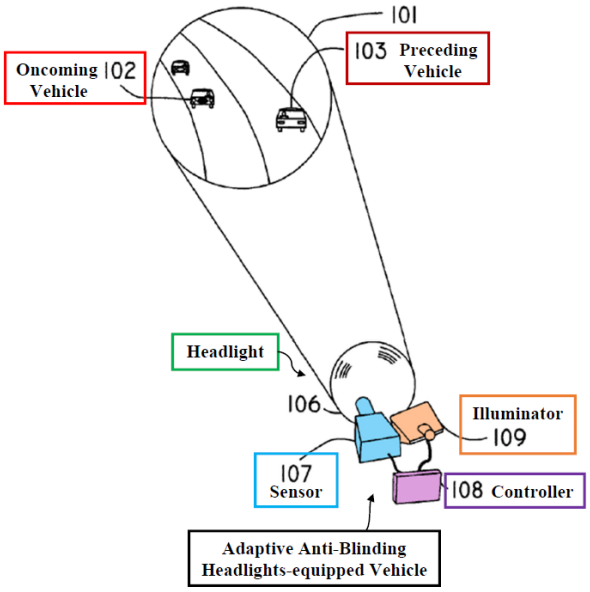

EX1005, FIG. 1 (annotated).

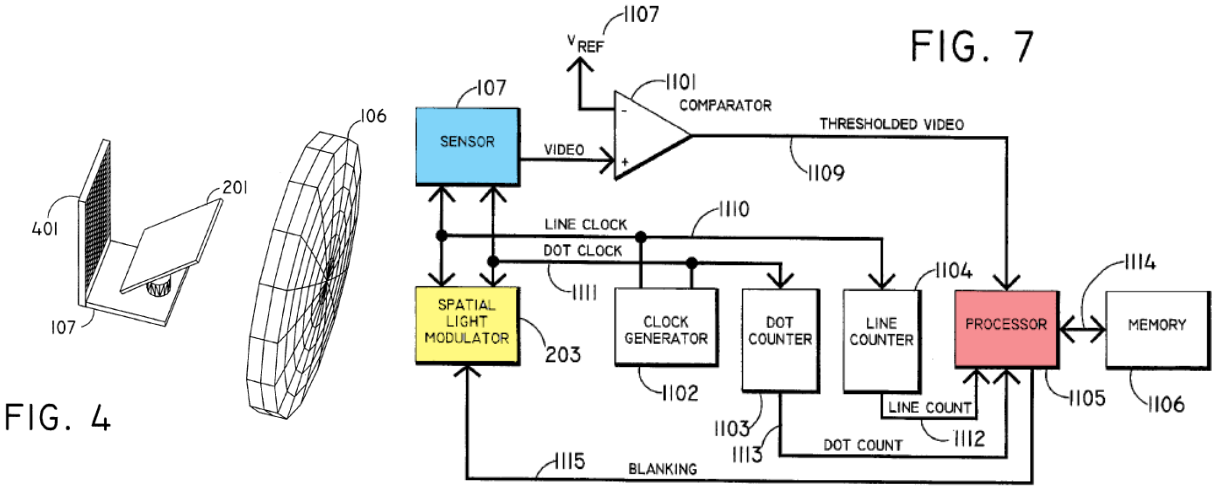

EX1005, FIGS. 4, 7 (annotated).

113. In view the above, Beam discloses these elements.

2. [56.1]/[64.1]/[72.1]/[80.1] "a structure for incorporating illuminating device elements, wherein the structure comprises a motor vehicle"

114. Beam discloses, "[i]n a typical automotive installation, two AABH units will be mounted on a vehicle, facing forward, just as are conventional

headlights." EX1005, 6:8-11. Beam's AABH includes "illuminating device elements," including an "illuminator 109," an "optical system 106," and a "controller 108" that are all mounted to the vehicle structure. EX1005, 1:5-22, 5:3-16.

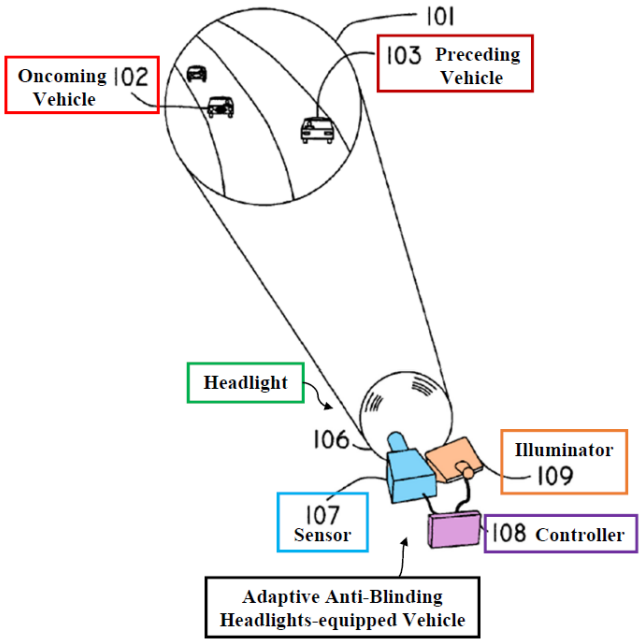

EX1005, FIG. 1 (annotated).

115. In view the above, Beam discloses these elements.

3. [56.2]/[64.2]/[72.2]/[80.2] "a plurality of individually controllable LEDs incorporated in the structure via at least one headlamp mounted to the structure, each headlamp including at least one of the LEDs, the LEDs in communication with a power source"

116. Beam's "FIG. 4 depicts a system similar to that of FIG. 2 except that the lamp 202 and spatial light modulator 203 are replaced by an *array of light sources 401* which are individually controlled." EX1005, 5:3-6. Beam

discloses that the individually controlled light sources can be "*light-emitting diodes [LEDs]*, lasers, incandescent lamps, arc lamps and electroluminescent lamps." EX1005, 8:4-12.

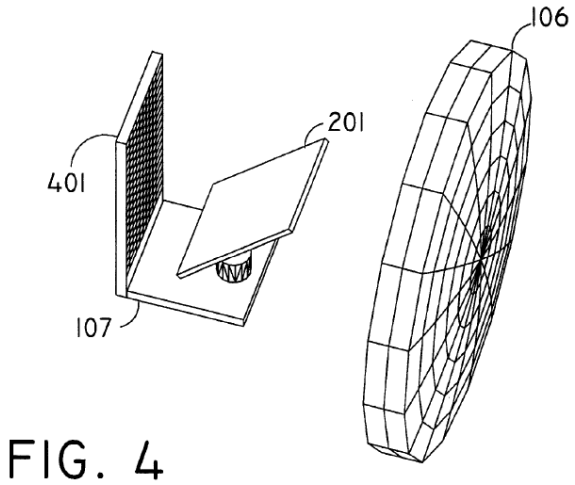

EX1005, FIG. 4.

117. A POSA would have understood that Beam's AABH units, and therefore the LEDs in array 401, are connected to a power source (all examples of the light sources including LEDs disclosed by Beam are electrically powered light sources, and they are in communication with power source in order to be operated). Other components of Beam's AABH, for example, sensor 107 produce "video or other *electrical* signals," which at least implies the connection to a power source. EX1005, 4:32-36. LEDs use a power source to operate, and thus a POSA would have understood (or at least found it obvious) that Beam's LEDs are connected to a power source. For example, Pederson, EX1037, discloses LED vehicle lights and discusses an advantage of using LEDs: "an

LED light source which draws less current and/or has *a reduced power requirement from a power source* for a vehicle." EX1037, ¶¶35, 55.

118. While it is my opinion that Beam discloses or at least suggests connecting the LEDs to power, to the extent that connecting the LEDs to a power source is not disclosed or obvious in view of Beam alone, Satonaka discloses that its vehicle headlamps light sources are "connected to battery BT." EX1014, ¶23. A POSA would have been motivated to connect Beam's AABH (and the LEDs in the AABH) to a power source to provide power to the LEDs for operation. This would have ensured the proper operation of Beam's AABH to allow the LEDs to create illumination. Such a modification, if necessary, would also be a simple combination of known prior art elements in predictable ways. A POSA would have had a reasonable expectation of success because these are basic structural elements connected in ways that would have been well within the POSA's skill.

119. In view the above, Beam and Satonaka disclose or render obvious these elements.

4. [56.3]/[64.3]/[72.3]/[80.3] "electronic circuitry apparatus for the controlled powering of the LEDs and other of the illuminating device elements"

120. Unsurprisingly, given its limited focus on vehicle lighting, the '551 patent does not discuss what "other of the illuminating device elements" in its

vehicle LED headlamp are controlled by the electronic circuitry apparatus. Regardless, Beam discloses "controller module uses the sensor spatial data (video)…to *control the Illuminator*." EX1005, 6:14-19, FIGS. 1, 1C-1D, 7. "Controller 108 selectively commands reduction of the energy of the microbeams falling on a particular object" by "command[ing] spatial light modulator 203 in illuminator 109 to either divert the selected microbeams or to attenuate them." EX1005, 4:48-57. The LEDs in Figure 4 are part of a "system similar to that of FIG. 2 except that lamp 202 and spatial light modulator 203 are replaced by an array of light sources 401." EX1005, 5:3-9. This means that spatial light modulator 203 is replaced with the circuitry for "controlled powering of the LEDs," as claimed, to selectively control "the energy of the microbeams" (LEDs). Because this circuitry takes the place of spatial light modulator 203, it would be part of controller 108 as shown in Figure 7, and therefore would meet the requirements of the means-plus-function structure for this term (electronic circuitry apparatus), and would also meet the broader plain meaning of this term. EX1005, 5:3-9. Thus, the equivalent LED control circuitry is present in Figure 4's system.

121. Again, the '551 patent unsurprisingly does not discuss in detail the "other of the illuminating elements" that are controlled by the electronic circuitry apparatus. However, in my opinion a POSA would have understood

that Beam's controller 108 controls the operation of, and therefore the powering of, parts of Beam's illuminating device including at least sensor 107, dot counter 1103, line counter 1104, memory 1106, and buses 1111/1113. EX1005, 5:33-54. This is because these elements are electronically connected to the controller, EX1005, FIG. 7, and because the controller is the element that regulates the function of these elements. A POSA would have understood, or at least found it obvious, that controller 108 would use additional control circuitry that would have been part of the electronic control circuitry for this purpose.

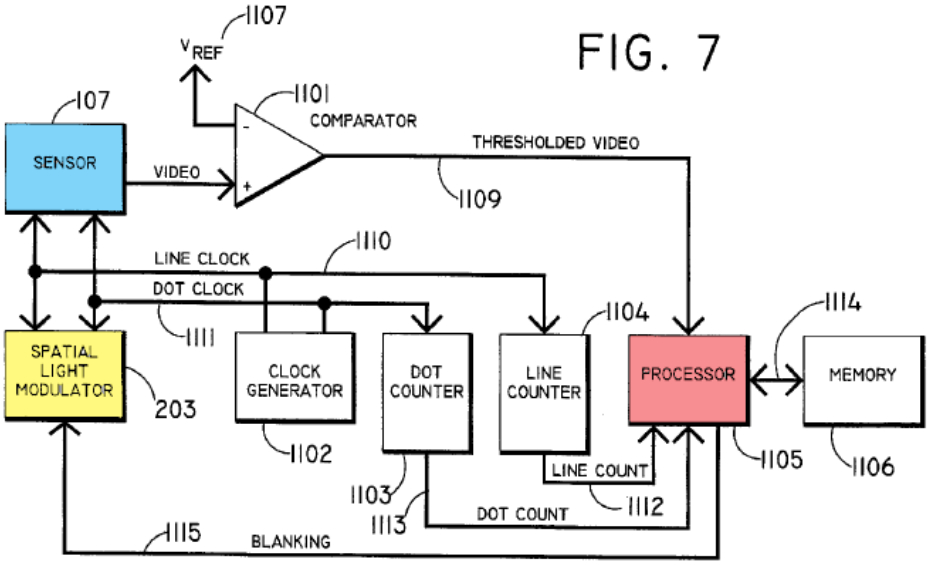

EX1005, FIG. 7 (annotated).

122. In view the above, Beam discloses or renders obvious these elements.

5. [56.4]/[64.4]/[72.4]/[80.4] "one or more processors"

123. Beam's Figure 7 shows "the *electronics portion of controller 108…* [showing] the input to *a processor 1105*." EX1005, 5:33-36, 5:46-48.

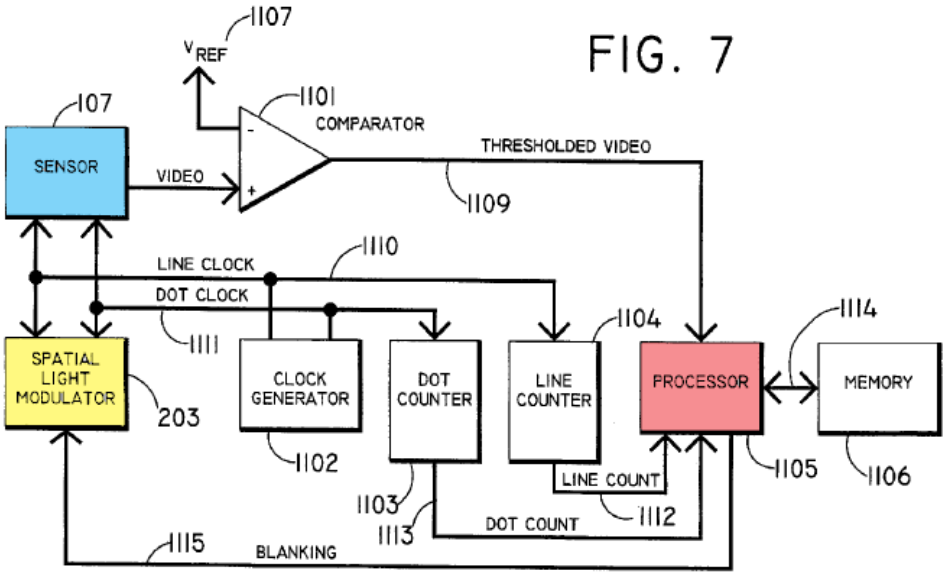

EX1005, FIG. 7 (annotated).

124. In view the above, Beam discloses these elements.

6. [56.5]/[64.5]/[72.5]/[80.5] "one or more sensors, including one or more cameras, placed on the structure for detecting coordinate-specific information about the illuminated area, at least one of said cameras in communication with power, and in communication with at least one of the one or more processors"

(a) Beam discloses this element.

125. Beam's "*imaging sensor* (such as a *video camera*) faces forward." EX1005, 6:12-13. Images from "*the sensor* and are converted to *video* or other *electrical signals*." EX1005, 5:10-13. Because the camera creates "electrical signals," a POSA would have understood that the camera is "in communication with power" as claimed. EX1005, 5:10-13. To the extent that this standard,

powered connection is not expressly disclosed by Beam, Satonaka discloses that its vehicle headlamps are in communication with power (e.g., Satonaka's headlamp is "connected to battery BT"). EX1014, ¶23. The camera in Beam is part of the AABH and would therefore also be in communication with power because a POSA would have undoubtedly been motivated to connect Beam's AABH to a power source in view of Satonaka. A POSA would have had a reasonable expectation of success because these are basic structural elements connected in ways that would have been well within the POSA's skill.

126. Sensor 107 (the camera) is connected to processor 1105: "[t]he spatial scene *data from sensor 107* is thresholded to eliminate weak signals and *becomes the input to a processor 1105*." EX1005, 5:34-36. This scene data is in the form of "pixel[s]," each of which have an associated "location" received by the processor. EX1005, 5:36-39. Beam also "determin[es] *coordinates* of…oncoming vehicle[s]" based on the presence of headlights detected by the camera, further reinforcing that Beam's sensor system detects the claimed "coordinate-specific information." EX1005, 8:23-27. A POSA would have therefore understood that the pixels *received by the camera*, and the *location data associated with them*, is "coordinate-specific information about the illuminated area" as claimed because Beam discloses determining *coordinates* from the sensor data. For example, Beam's system steps through each pixel in

the pixel array by means of a line clock and a dot clock that increment to identify the pixel to be examined, which, in turn, corresponds to the coordinates of that pixel. EX1005, 5:36-44.

(b) Satonaka also discloses this element.

127. Alternatively, it would have been obvious to a POSA to modify Beam's system to map each pixel with coordinates, as taught by Satonaka, to provide the algorithmic detail implicit in Beam. Section X.A; EX1014, ¶¶25-25. Satonaka's adaptive headlight system detects vehicles by processing an "image 120…that was obtained by camera 22." EX1014, ¶26. "Each pixel … identifies a position based on the *coordinates* (X_n, Y_n)." EX1014, ¶25. Satonaka details a multi-step algorithm by which the pixels are processed to determine (1) the boundaries of the roadway, and (2) the location of a vehicle in the roadway. EX1014, ¶¶25-44. Thus, Satonaka discloses that the pixels are each associated with a coordinate system (here, an X, Y system) to plot the location of traffic.

128. Satonaka's algorithm uses coordinates to quantify the spatial locations of detected headlights in a similar system. *See* Section IX.A.2; EX1014, ¶¶25-44. Like Beam, Satonaka's system detects headlights and processes the resulting camera image to determine the location of those headlights using X,Y coordinates for each pixel. EX1014, ¶¶25-44; EX1005,

4:9-59, 5:29-54. Thus, in view of Satonaka, a POSA would have found the details that are implicit in Beam.

(c) It would have been obvious to modify Beam in view of Satonaka with a reasonable expectation of success.

129. If Patent Owner argues that Beam does not disclose producing and storing coordinates with its images, it would have been obvious to a POSA to modify Beam's algorithm to include the coordinates of the pixels as taught by Satonaka. This would have expressly provided the algorithm details that already exist implicitly in Beam's system, therefore allowing the position of the headlights to be determined based on the coordinates of the pixels that are processed per Beam's algorithm to determine the locations to be "blanked." EX1005, 5:33-44. This modification only involves basic programming changes to the algorithm stored on Beam's memory, not changes to Beam's physical components.

130. Thus, Beam's camera would detect the claimed "coordinate-specific information" as modified by Satonaka.

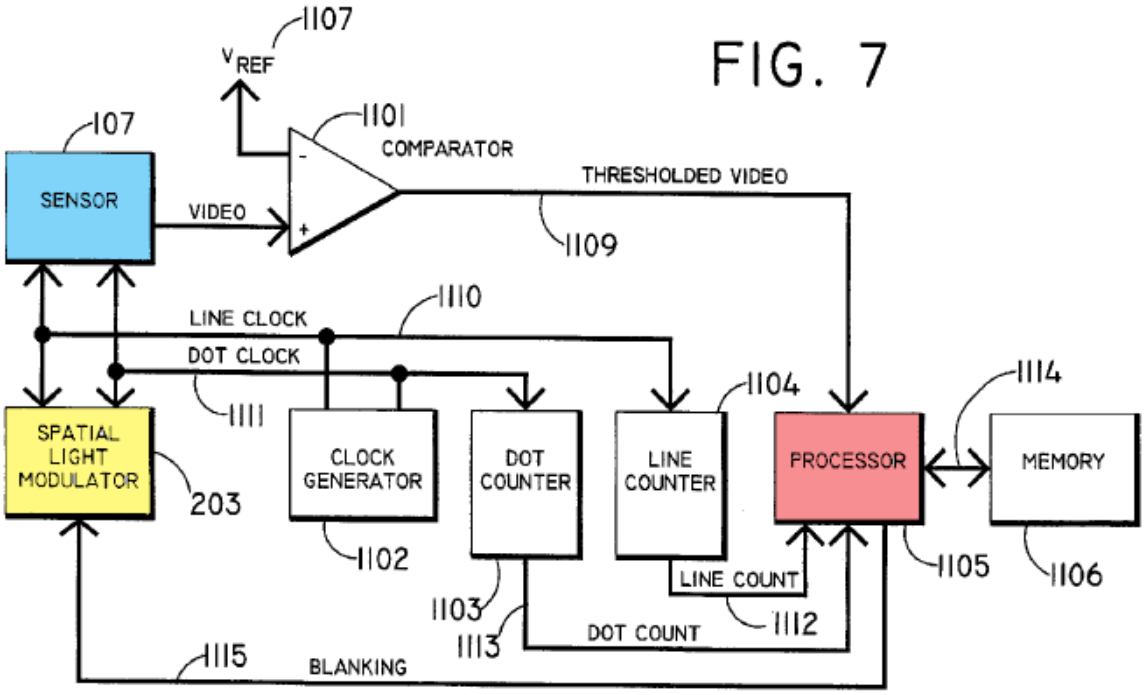

EX1005, FIG. 7 (annotated).

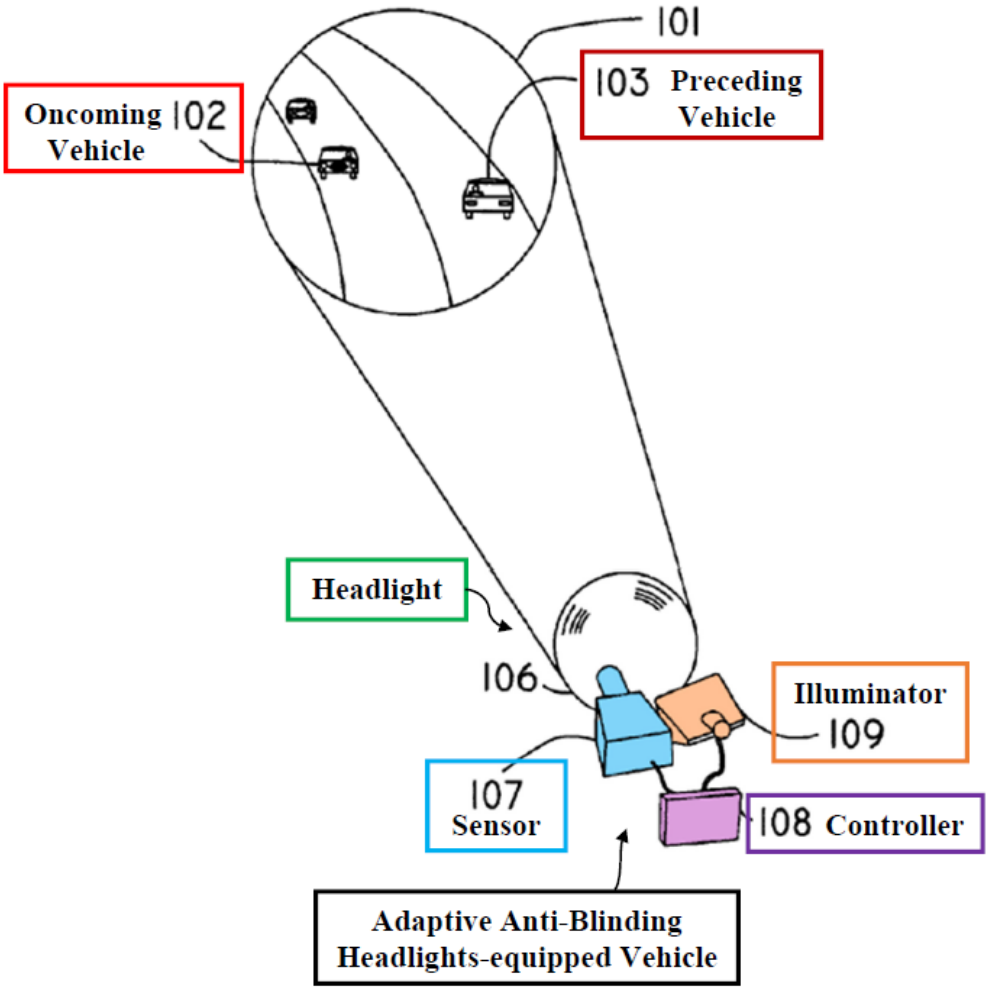

EX1005, FIG. 1 (annotated).

131. In view the above, Beam and Satonaka disclose or render obvious these elements.

7. [56.6]/[64.6]/[72.6]/[80.6][5] "a controller, including at least one of the one or more processors, integrated with the structure via mounting, in communication with the LED controlling power electronic circuitry apparatus, said controller arranged to process the information communicated from the cameras and to automatically control the light provided to the illuminated area"

132. Beam's sensor output "drives controller 108, which uses the data to determine the size and position of the light emitters to be dimmed." EX1005, 5:10-15. "FIG. 7 is a block diagram of the electronics portion of *controller 108*…[showing] *processor 1105*." EX1005, 5:33-36, 5:46-48. Thus, controller 108 includes the processor, and is "in communication with the controlling power electronic circuitry apparatus" as claimed for the reasons discussed above. Section X.B.4. Further, controller 108 uses the sensor data "to determine which microbeams must be reduced in intensity to protect the other drivers." EX1005, 2:15-19. Beam's system "provides all of these functions *automatically*" and operates "continuously and dynamically" and therefore "automatically control[s]" the illumination as claimed. EX1005, 2:63-65, 5:65-6:4, 1:5-18 ("a

[5] The "controlling power electronic circuitry apparatus" lacks antecedent basis. I assume this is an error and that this element intended to refer to the "electronic circuitry apparatus" of [24.3]/[32.3]/[40.3]/[48.3] for purposes of this report.

method and apparatus for *automatically* reformatting the pattern of a beam from a light source"). I note that Figure 7 in Beam shows the communication between Process 1105 and sensors 107, spatial light modulator 203 (the LED drivers), and memory 1106.

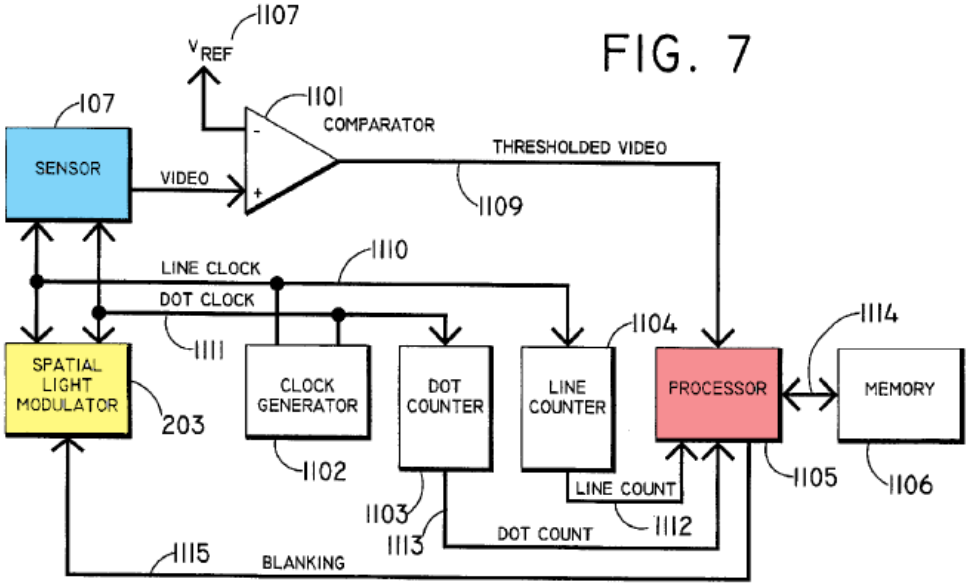

EX1005, FIG. 7 (annotated).

133. In view the above, Beam discloses these elements.

8. [56.7]/[64.7]/[72.7]/[80.7] "memory storing instructions that, when executed by one or more processors of the controller, enable the controller to:"

134. Beam's "[p]rocessor 1105 uses *appropriate algorithms* on the incoming data to determine the locations to be blanked, and stores them in *memory 1106*." EX1005, 5:46-48, 5:33-36, 6:8-39. Thus, Beam's stored algorithms are "instructions" as claimed because the algorithm causes the controller to perform certain steps. A POSA would have understood that the

algorithms are stored in memory 1106 at least because this allows Beam's processor 1105 to operate per the algorithm. EX1005, 5:33-36, 5:46-48; 6:8-39. Beam's Figure 7 supports this understanding because of the use of a bi-directional arrow between memory 1106 and processor 1105. EX1005, 5:33-36, 5:46-48; 6:8-39.

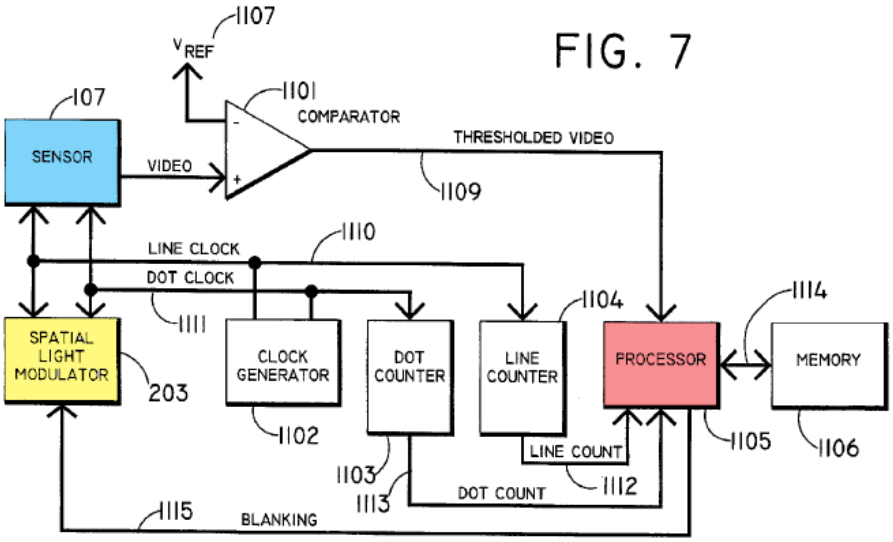

EX1005, FIG. 7 (annotated).

135. In view the above, Beam discloses these elements.

C. Independent Claim 56 Instructions

136. As I discuss below, Beam and, to the extent necessary, Beam and Satonaka disclose or render obvious these instructions.

1. [56.8] "determine, based on data from one or more of the sensors, a vertical and horizontal position associated with the at least one other vehicle;"

137. Beam's "controller module uses the sensor spatial data (video) to determine whether there are illumination sources (headlights or tail lights)

present in the headlight's field-of-view, [and] *determines their location* relative to the Adaptive Anti-Blinding Headlights beam." EX1005, 6:14-17. Thus, Beam's system determines a location of the other traffic (via headlights or taillights) using the coordinate-specific information (the video data from the camera). A POSA would have understood, or at least found it obvious, that Beam's system stores those locations using some type of spatial coordinate to identify where the other traffic is located with respect to the AABH. EX1005, 5:46-48. A POSA would understand that coordinates define the location of the target vehicle, and that this location would include the vertical and horizontal position as claimed. This enables Beam's system to determine which areas in the overall illuminated area need to be "blanked" to reduce the illumination, preventing other drivers from being blinded. EX1005, 5:33-54.

138. Alternatively, it also would have been obvious to modify Beam's system to include coordinates associated with each pixel, as taught by Satonaka. Section X.A. Satonaka's adaptive headlight system detects vehicles by processing an "image 120…that was obtained by camera 22." EX1014, ¶26. "Each pixel … identifies a position based on the *coordinates* (X_n, Y_n)." EX1014, ¶25. Satonaka details a multi-step algorithm by which the pixels are processed to determine (1) the boundaries of the roadway, and (2) the location of a vehicle in the roadway. EX1014, ¶¶25-44. Thus, Satonaka discloses that the pixels are

each associated with a coordinate system (here, an X, Y system, which is horizontal (X) and vertical (Y) position) to plot the location of traffic. Satonaka's algorithm uses coordinates to quantify the spatial locations of detected headlights in a similar system. *See* Section IX.A.2; EX1014, ¶¶25-44. Like Beam, Satonaka's system detects headlights and processes the resulting camera image to determine the location of those headlights using X,Y coordinates for each pixel. EX1014, ¶¶25-44; EX1005, 4:9-59, 5:29-54. Thus, in view of Satonaka, a POSA would have found the details that are implicit in Beam.

139. If Patent Owner argues that Beam does not disclose producing and storing coordinates with its images, it would have been obvious to a POSA to modify Beam's algorithm to include the coordinates of the pixels as taught by Satonaka. This would have expressly provided the algorithm details that already exist implicitly in Beam's system, therefore allowing the position of the headlights to be determined based on the coordinates of the pixels that are processed per Beam's algorithm to determine the locations to be "blanked." EX1005, 5:33-44. This modification only involves basic programming changes to the algorithm stored on Beam's memory, not changes to Beam's physical components.

140. The modified system would determine which pixels/coordinates correspond to the vehicle, and record those coordinates, as taught by both Beam and Satonaka. EX1005, 5:33-54; EX1014, ¶¶25-34.

141. In view the above, Beam and Satonaka disclose or render obvious this element.

2. [56.9] "select a first cluster of the LEDs based at least in part on at least one of the vertical and horizontal position compared to known aimings of light associated with the first cluster; and"

142. Beam discloses that, after determining the location of the other traffic, Beam's controller "will then control the light output of *a group selected from a multiplicity of narrow angle beams* (microbeams) which comprise the overall headlight beam pattern." EX1005, 2:53-59. Further, "[b]y controlling an area determined by analyzing the position of the lights sensed ahead, the area of the beam that would dazzle the driver will be darkened." EX1005, 2:56-3:3. This is possible because "[t]he *angular position or attenuation of each of the microbeams* is independently set" based on the "*spatial locations of the sources* [being] mapped into controller 108." EX1005, 4:46-48, 4:53-57. Thus, Beam selects the cluster of LEDs having the claimed "aimings," or direction, that correspond with the detected vehicle (via the vertical and horizontal positions as discussed above in [56.8]) based on the predetermined position and location of each LED (which is equivalent to knowing each LED's direction). I note that the

selected cluster or group in Beam may consist of a single or multiple LEDs, depending on how much of the light field must be darkened. The result of this process is shown below, where a selected group of microbeams results in "illumination in the shaded areas being significantly reduced to protect the vision of oncoming drivers." EX1005, 4:21-27.

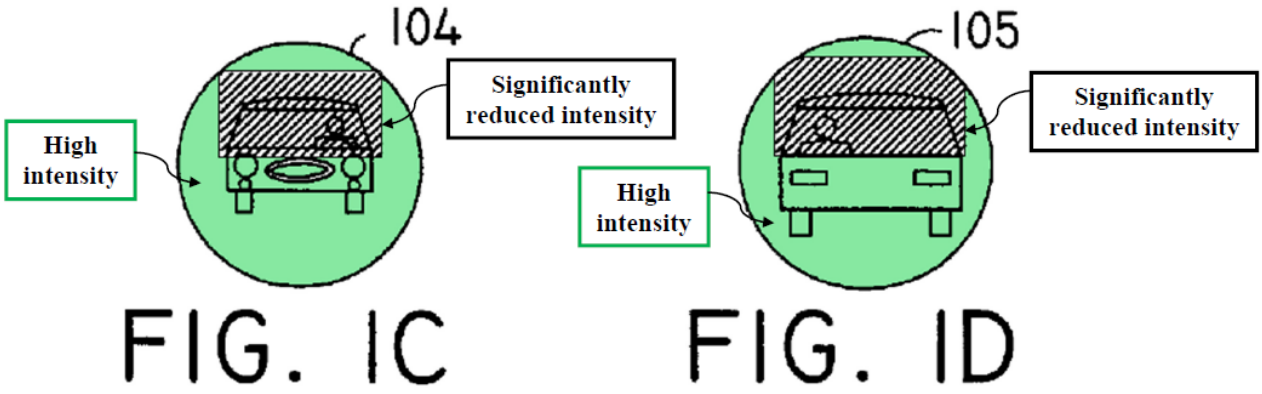

EX1005, FIGS. 1C-1D (annotated).

143. Beam's system uses an array of individually controllable LED's as the microbeam sources. EX1005, 5:3-16. So each LED is selectively controlled to produce a microbeam. Thus, the selection of microbeams described above would result in selecting a group of LEDs corresponding to the detected traffic.

144. In view the above, Beam discloses this element.

3. [56.10] "reduce intensity of illumination to non-glaring illumination of a first area associated with the at least one other vehicle, relative intensity of illumination on both sides of the first area at elevations common with the first area illuminated by a second cluster of the LEDs, by control of emission from the first cluster."

145. Beam discloses "[b]y controlling an area determined by analyzing the position of the lights sensed ahead, *the area of the beam that would dazzle the driver will be darkened*." EX1005, 2:56-3:3. As shown below, the selected group of LEDs results in "illumination in the shaded areas being *significantly reduced to protect the vision of oncoming drivers*." EX1005, 4:21-24. Reducing illumination is "chang[ing] emission" as claimed because the reduced illumination lowers the intensity of the LEDs. And, as Beam explains, "[t]he resulting beam is at *full intensity except* in areas that would dazzle a driver ahead." EX1005, 4:57-59. This high intensity area is created by a "second cluster" of LEDs (microbeam sources) as claimed. EX1005, 4:57-59. As shown below, the reduced intensity area is in a field of higher intensity that extends on both sides, above, and below, the reduced intensity area. EX1005, FIGS. 1C-1D. The reduced intensity (grey) and higher intensity (green) areas are at a common elevation as shown below.

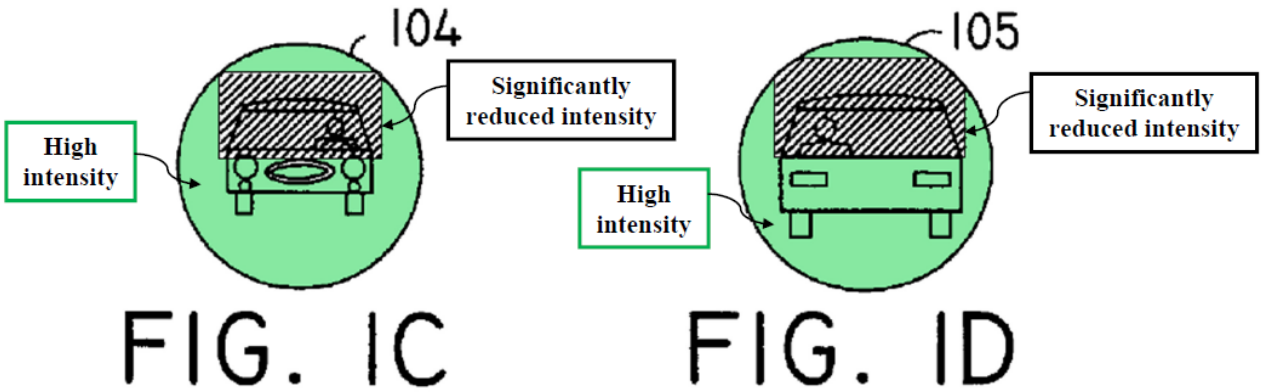

EX1005, FIGS. 1C-1D (annotated).

146. In view the above, Beam discloses this element.

D. Claim 57 "The illuminating device of claim 56, wherein: the data includes image data; the control of emission of the first cluster includes a change of at least one of color or intensity or control of at least one LED of the first cluster into a nonemitting state; at least one of the first cluster second cluster includes a plurality of the LEDs and at least one of the first cluster or the second cluster includes non-contiguous LEDs; and the known light aimings associated with the first cluster is based at least on art on known directionality of light emitted by LEDs of the first cluster exiting from the at least one headlamp."

147. Beam's sensor is a camera, which produces image data. Section X.6; EX1005, 6:12-13. For the changed emission element, Beam reduces the illumination of the LEDs in the selected group, which a POSA would have understood as reducing "intensity" of the LEDs as claimed. EX1005, 4:21-25. Beam discloses determining "which *microbeams* must be reduced in intensity to protect the other drivers," which confirms that multiple microbeams (LEDs) would be part of a group. EX1005, 4:16-19. Further, a POSA would have understood, or at least found it obvious, that a plurality of LEDs would have

been selected as part of Beam's selected "group" because a single LED is unlikely to cover sufficient area to fully shade a target vehicle as shown in FIGs. 1C-1D. EX1005, 2:53-56. This is especially the case as the target vehicle gets closer and takes up more of the illuminated area. I note that the changed emissions element includes three changes presented in the alternative (intensity, color, non-emitting state), and thus I understand that Beam's change in intensity discloses this term.

148. For the non-contiguous element, Beam also discloses that the glare-reduction process "can be done for any number of vehicles that fall in the headlight beam [area]." EX1005, 2:62-65. This means that when there are two or more separated vehicle targets, as would be the case in most situations with multiple other vehicles present, Beam's system would select a cluster of LEDs that are non-contiguous to cover all of the vehicle targets. For example, in the multi-vehicle situation in Beam's Figure 1, applying the disclosed dimmed areas as shown in Figures 1C-1D would have resulted in larger areas of fully illuminated beam (and thus, undimmed LEDs) between oncoming vehicle 102 and preceding vehicle 103. I have created an annotated Figure 1 that shows the non-contiguous dimmed areas of Figures 1C-1D. The fact that there are high intensity areas (green) between the low intensity areas (grey) means that the

LEDs creating the low intensity areas are not contiguous because they are separated by LEDs emitting high intensity light to form the green areas.

149. Regarding the known aimings element, as discussed in [56.9], Beam selects the LEDs in the first cluster for glare prevention because "[t]he *angular position or attenuation of each of the[] microbeams* is independently set" based on the "*spatial locations of the sources* [being] mapped into controller 108." EX1005., 4:46-48, 4:53-57. Thus, each LED has a preset direction, or "known aiming" as claimed.

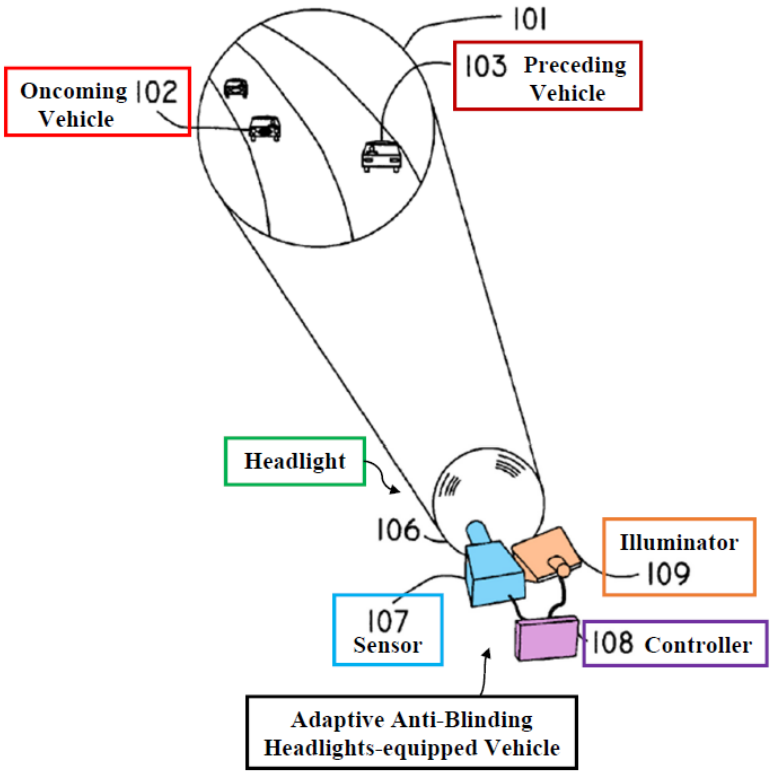

EX1005, FIG. 1 (excerpt, annotated).

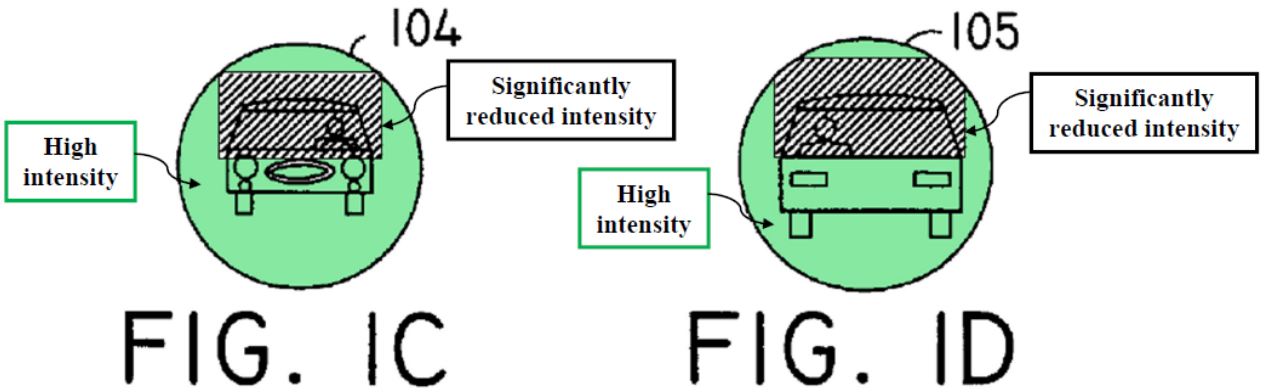

EX1005, FIGS. 1C-1D (excerpt, annotated).

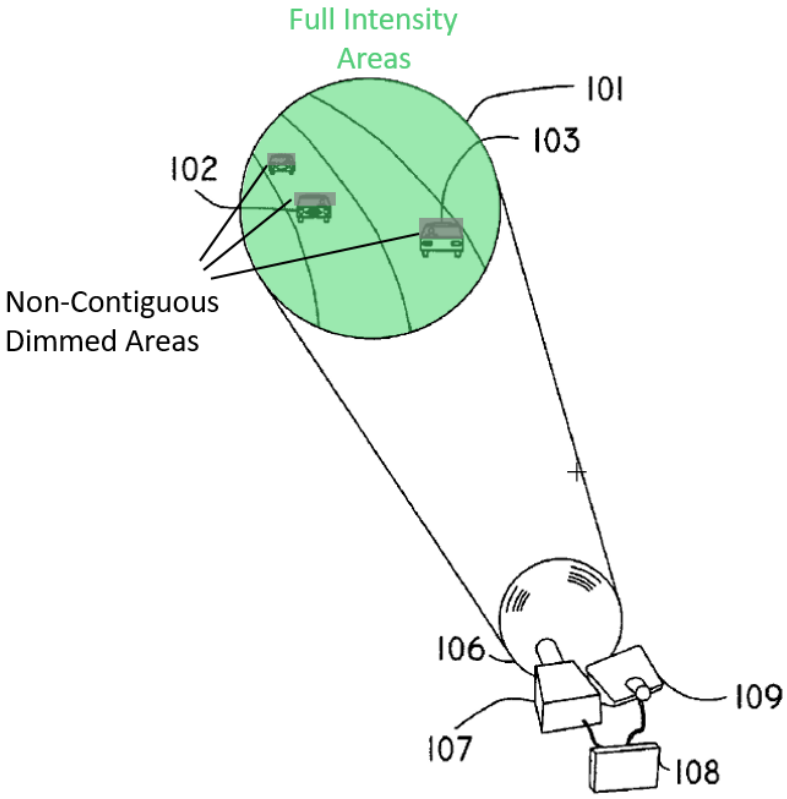

EX1005, FIG. 1 (excerpt, annotated).

150. In view the above, Beam discloses this claim.

E. Claims 62/70/78/86 "The illuminating device of claim 56, further including one or more optical control elements to control light emitted from one or more of the LEDs."

151. Beam discloses "output from the active emitters [the LEDs] is projected through optical system 106." EX1005, 5:15-16. Beam discloses these claims with at least beamsplitter 201 and spatial light modulator 203. EX1005, 4:26-59, 5:17-21, 8:4-12, 1:63-65, FIGS. 2, 5. These are examples of optical control elements for controlling the LED light.

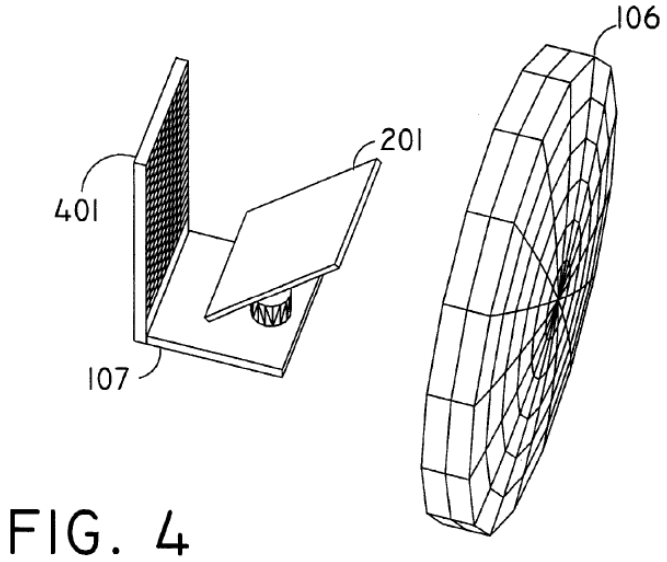

EX1005, FIG. 4.

152. Thus, Beam discloses or renders obvious these claims.

F. Claims 63/71/79/87 "The illuminating device of claim 62, wherein the optical control elements include at least one of one or more reflectors, refractors or lenses."

153. The LED emissions in Beam pass through optical system 106. Section X.E (citing EX1005, 5:15-16.) Beam further discloses "a spatial light

modulator selected from the group consisting of digital mirror devices, liquid crystal devices, and grating light valves for selectively controlling the intensity of individual microbeam sources…" EX1005, 8:4-12. A digital mirror device is a reflector. A POSA would have understood, or at least found it obvious, that optical system 106 is a system that redirects input light to form a desired light output distribution, which is the definition of "optical system". Such system includes reflective, and/or refractive features based on well-known geometric optics principles.

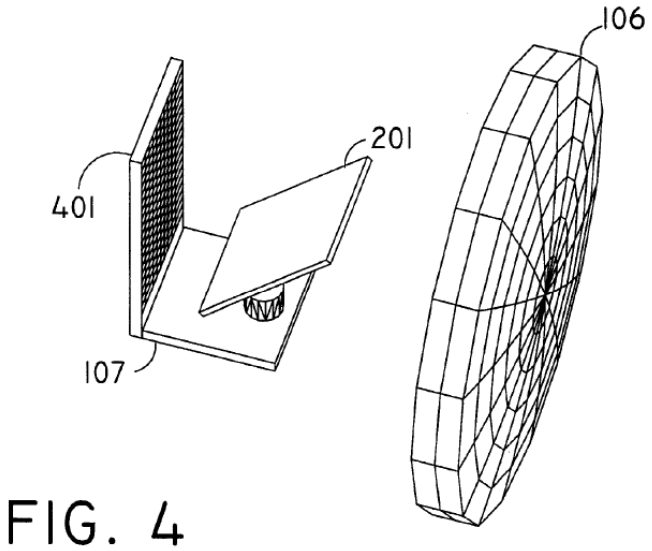

EX1005, FIG. 4.

154. In view the above, Beam discloses or renders obvious these claims.

G. Independent Claim 64 Instructions

1. [64.8] "select a first cluster of the LEDs having light associated there that is directed towards the other vehicle based at least in part on first data from one or more of the sensors indicating a first position associated with the other vehicle;"

155. [64.8] is patentably indistinct from elements [56.8] and [56.9], and is disclosed by Beam for the same reasons. Sections X.C.1-2. The coordinates discussed in [56.8] and [56.9] from the sensors are "data from one or more of the sensors indicating a first position" of the target vehicle as claimed because vehicle coordinates show the position of the vehicle.

156. Beam's "controller module uses the sensor spatial data (video) to determine whether there are illumination sources (headlights or tail lights) present in the headlight's field-of-view, [and] *determines their location* relative to the Adaptive Anti-Blinding Headlights beam." EX1005, 6:14-19. Thus, Beam's system determines a location (or "first position" as claimed) of the other traffic (via headlights or taillights) using the coordinate-specific information (the video data from the camera). A POSA would have understood, or at least found it obvious, that Beam's system stores those locations using some type of spatial coordinate to identify where the other traffic is located with respect to the AABH. EX1005, 5:46-48. This enables Beam's system to determine which areas in the overall illuminated area need to be "blanked" to reduce the illumination, preventing other drivers from being blinded. EX1005, 5:33-54.

157. Beam discloses that, after determining the location of the other traffic, Beam's controller "will then control the light output of *a group selected from a multiplicity of narrow angle beams* (microbeams) which comprise the overall headlight beam pattern." EX1005, 2:53-59. Further, "[b]y controlling an area determined by analyzing the position of the lights sensed ahead, the area of the beam that would dazzle the driver will be darkened." EX1005, 2:56-3:3. This is possible because "[t]he *angular position or attenuation of each of the microbeams* is independently set" based on the "*spatial locations of the sources* [being] mapped into controller 108." EX1005, 4:46-48, 4:53-57. Thus, Beam selects the cluster of LEDs that correspond with the detected vehicle (via the detected positions as discussed above). I note that the selected cluster or group in Beam may consist of a single or multiple LEDs, depending on how much of the light field must be darkened. The result of this process is shown below, where a selected group of microbeams results in "illumination in the shaded areas being significantly reduced to protect the vision of oncoming drivers." EX1005, 4:21-27.

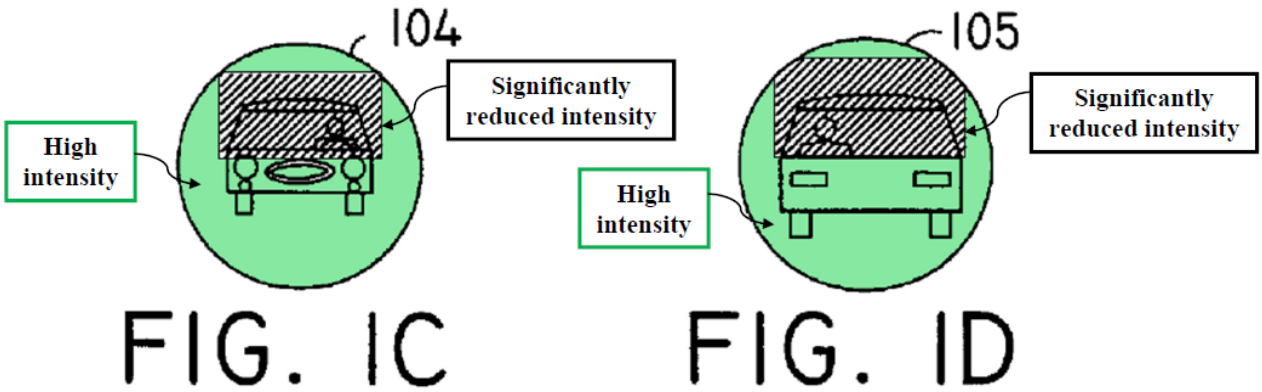

EX1005, FIGS. 1C-1D (annotated).

158. Beam's system uses an array of individually controllable LED's as the microbeam sources. EX1005, 5:3-16. So each LED is selectively controlled to produce a microbeam. Thus, the selection of microbeams described above would result in selecting a group of LEDs corresponding to the detected traffic.

159. In view the above, Beam discloses this element.

2. [64.9] "control a first change to one or more characteristics of the light associated with the first cluster of the LEDs that is directed towards the other vehicle, that diminishes glare to a driver of the other vehicle when the other vehicle is at the first position;"

160. Element [64.9] is patentably indistinct from element [56.10], and is disclosed by Beam for the same reasons. Sections X.C.3. The reduced intensity is a "characteristic" of the LEDs as claimed.

161. Beam discloses "[b]y controlling an area determined by analyzing the position of the lights sensed ahead, *the area of the beam that would dazzle the driver will be darkened*." EX1005, 2:56-3:3. As shown below, the selected

group of LEDs results in "illumination in the shaded areas being *significantly reduced to protect the vision of oncoming drivers*." EX1005, 4:21-24. Reducing illumination is "chang[ing] emission" as claimed because the reduced illumination lowers the intensity of the LEDs. And, as Beam explains, "[t]he resulting beam is at *full intensity except* in areas that would dazzle a driver ahead." EX1005, 4:57-59. This high intensity area is created by a "second cluster" of LEDs (microbeam sources) as claimed. As shown below, the example of a reduced intensity area is inside of a field of higher intensity that extends on both sides, above, and below, the reduced intensity area. EX1005, FIGs 1C-1D. The reduced intensity (grey) and higher intensity (green) areas may be at a common elevation as shown below.

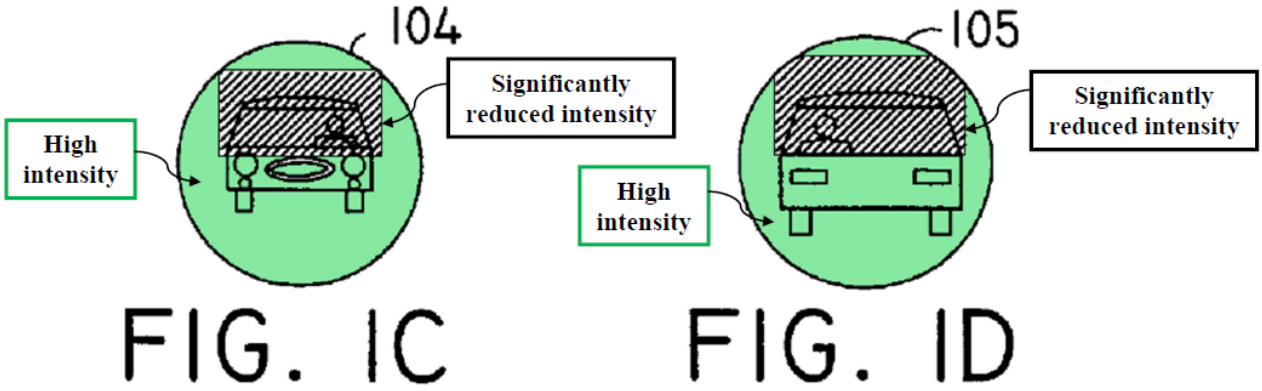

EX1005, FIGS. 1C-1D (annotated).

162. In view the above, Beam discloses this element.

3. [64.10] "select a second, different cluster of the LEDs having light associated therewith that is directed towards the other vehicle based at least in part on second, subsequent data from one or more of the sensors indicating a second, subsequent position associated with the other vehicle; and"

163. Beam discloses that "[m]ultiple vehicles … are accommodated simultaneously by the system" and that the glare-reduction process "can be done for any number of vehicles that fall in the headlight beam [area]." EX1005, 2:62-63, 6:27-28. A second vehicle at a different position uses a different cluster of LEDs than the first vehicle, and thus Beam's system would "select a second, different cluster" of LEDs to accommodate the second vehicle as claimed. The remainder of [64.10] is a patentably indistinct duplication of [64.8]. Section X.G.1; EX1005, 2:56-3:3.

164. As discussed above, Beam's "controller module uses the sensor spatial data (video) to determine whether there are illumination sources (headlights or tail lights) present in the headlight's field-of-view, [and] *determines their location* relative to the Adaptive Anti-Blinding Headlights beam." EX1005, 6:14-19. Thus, Beam's system determines a location of the other traffic (via headlights or taillights) using the coordinate-specific information (the video data from the camera). A POSA would have understood, or at least found it obvious, that Beam's system stores those locations using some type of spatial coordinate to identify where the other traffic is located with

respect to the AABH. EX1005, 5:46-48. A POSA would understand that coordinates define the location of the target vehicle, and that this location would include the vertical and horizontal position as claimed. This enables Beam's system to determine which areas in the overall illuminated area need to be "blanked" to reduce the illumination, preventing other drivers from being blinded. EX1005, 5:33-54.

165. In view the above, Beam discloses this element.

4. [64.11] "control a second, subsequent change, to one or more characteristics of the light that is subsequently directed towards the other vehicle, that diminishes glare to the driver of the other vehicle when the other vehicle is at the second position."

166. Element [64.11] is a patentably indistinct duplication of [64.9] for a second vehicle, which Beam discloses for the reasons discussed in [64.10]. Sections X.G.2-3.

167. As discussed above, Beam discloses "[b]y controlling an area determined by analyzing the position of the lights sensed ahead, *the area of the beam that would dazzle the driver will be darkened*." EX1005, 2:56-3:3. As shown below, the selected group of LEDs results in "illumination in the shaded areas being *significantly reduced to protect the vision of oncoming drivers*." EX1005, 4:21-24. Reducing illumination is "chang[ing] emission" as claimed because the reduced illumination lowers the intensity of the LEDs. And, as

Beam explains, "[t]he resulting beam is at *full intensity except* in areas that would dazzle a driver ahead." EX1005, 4:57-59. This high intensity area is created by a "second cluster" of LEDs (microbeam sources) as claimed. EX1005, 4;57-59. As shown below, the example of a reduced intensity area is inside of a field of higher intensity that extends on both sides, above, and below, the reduced intensity area. EX1005, FIGs. 1C-1D. The reduced intensity (grey) and higher intensity (green) areas may be at a common elevation as shown below.

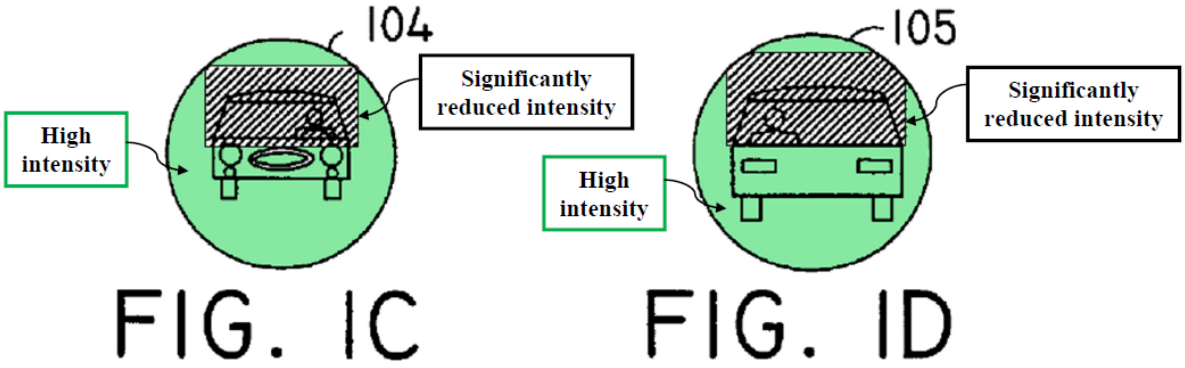

EX1005, FIGS. 1C-1D (annotated).

168. In view the above, Beam discloses this element.

H. Claim 65 "The illuminating device of claim 64, wherein: the first data or second data includes image data; at least one of the first or second change to characteristics of light associated with at least one of the first or second cluster of LEDs includes at least one of a change to color, to intensity, or a change of at least one LED respective cluster to a non-emitting state; at least one of the first cluster or the second cluster includes a plurality of the LEDs and at least one of the first cluster or the second cluster includes non-contiguous LEDs; and the light that is directed or subsequently directed towards the other vehicle is determined based at least in part on known directionality of light emitted by the respective first or second cluster exiting the at least one headlamp."

169. Claim 65 is patentably indistinct from claim 57 and is disclosed by Beam accordingly. Section X.D.

170. As discussed above, Beam's sensor is a camera, which produces image data. Section X.6; EX1005, 6:12-14. For the changed emission element, Beam reduces the illumination of the LEDs in the selected group, which a POSA would have understood as reducing "intensity" of the LEDs as claimed. EX1005, 4:21-25. Beam discloses determining "which *microbeams* must be reduced in intensity to protect the other drivers," which confirms that multiple microbeams (LEDs) would be part of a group. EX1005, 4:16-19. Further, a POSA would have understood, or at least found it obvious, that a plurality of LEDs would have been selected as part of Beam's selected "group" because a single LED is unlikely to cover sufficient area to fully shade a target vehicle as shown in Figures 1C-1D. EX1005, 2:53-56. This is especially the case as the target vehicle gets closer and takes up more of the illuminated area. I note that

the changed emissions element includes three changes presented in the alternative (intensity, color, non-emitting state), and thus I understand that Beam's change in intensity discloses this term.

171. For the non-contiguous element, Beam also discloses that the glare-reduction process "can be done for any number of vehicles that fall in the headlight beam [area]." EX1005, 2:62-65. This means that when there are two or more separated vehicle targets, as would be the case in most situations with multiple other vehicles present, Beam's system would select a cluster of LEDs that are non-contiguous to cover all of the vehicle targets. For example, in the multi-vehicle situation in Beam's Figure 1, applying the disclosed dimmed areas as shown in Figures 1C-1D would have resulted in larger areas of fully illuminated beam (and thus, undimmed LEDs) between oncoming vehicle 102 and preceding vehicle 103. I have created an annotated Figure 1 that shows the non-contiguous dimmed areas of Figures 1C-1D. The fact that there are high intensity areas (green) between the low intensity areas (grey) means that the LEDs creating the low intensity areas are not contiguous because they are separated by LEDs emitting high intensity light to form the green areas.

172. Regarding the known aimings element, as discussed above, Beam selects the LEDs in the first cluster for glare prevention because "[t]he *angular position or attenuation of each of the[] microbeams* is independently set" based

on the "*spatial locations of the sources* [being] mapped into controller 108." EX1005, 4:46-48, 4:53-57. Thus, each LED has a preset direction, or "known aiming" as claimed.

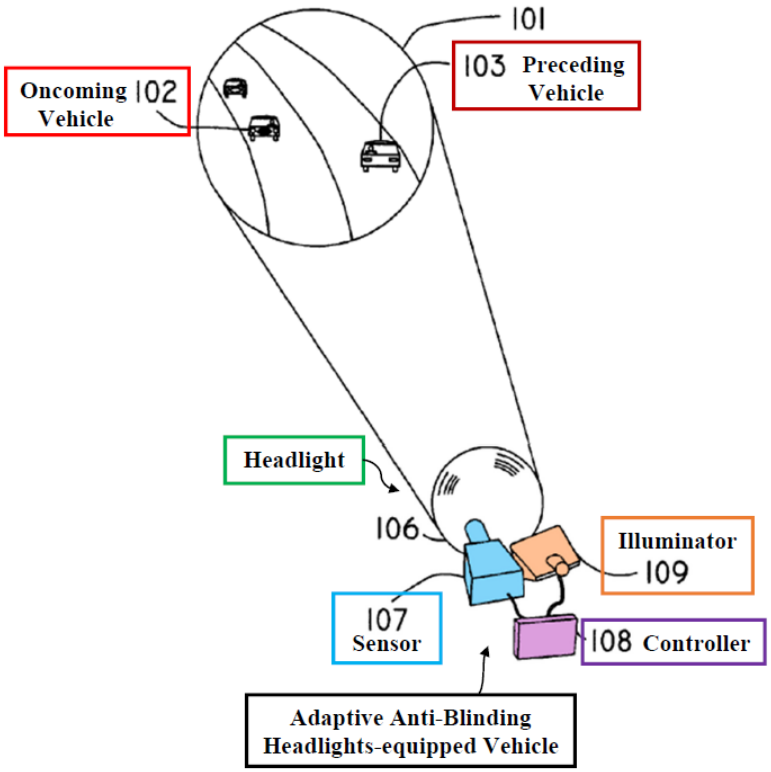

EX1005, FIG. 1 (annotated, excerpt).

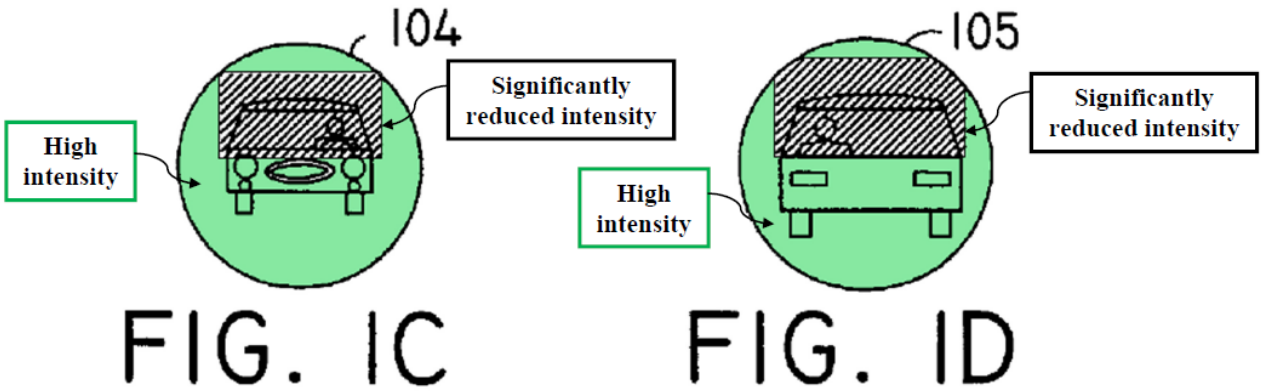

EX1005, FIGS. 1C-1D (annotated).

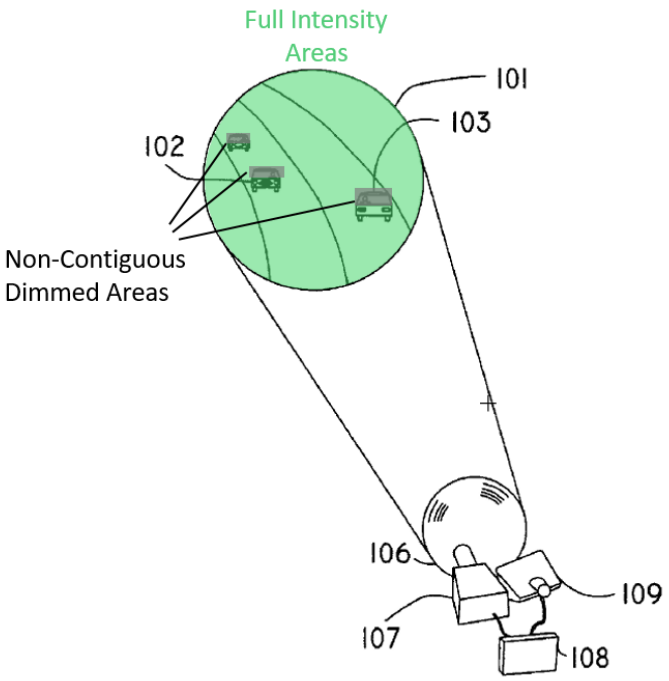

EX1005, FIG. 1 (annotated, excerpt).

173. In view the above, Beam discloses this claim.

I. Independent Claim 72 Instructions

1. [72.8] "determine a target based on first data from one or more of the sensors;"

174. Claim element [72.8] is patentably indistinct from [56.8] and is taught by Beam for the reasons discussed above. Section X.C.1.

175. As I discuss above, Beam's "controller module uses the *sensor spatial data* (video) to determine whether there are illumination sources (headlights or tail lights) present in the headlight's field-of-view, [and] *determines their location* relative to the Adaptive Anti-Blinding Headlights

beam." EX1005, 6:14-19. Thus, Beam's system determines a location of the other traffic (via headlights or taillights) using sensor information (the video data from the camera).

176. In view the above, Beam discloses this element.

2. [72.9] "determine a first target location based on the first data; from one or more of the LEDs"

177. Claim element [72.9] is patentably indistinct from claim element [56.8], and is disclosed by Beam for the same reasons. Sections X.C.1.

178. As I discuss above, Beam's "controller module uses the *sensor spatial data* (video) to determine whether there are illumination sources (headlights or tail lights) present in the headlight's field-of-view, [and] *determines their location* relative to the Adaptive Anti-Blinding Headlights beam." EX1005, 6:14-19. Thus, Beam's system determines a location of the other traffic (via headlights or taillights) using sensor information (the video data from the camera).

179. In view the above, Beam discloses this element.

3. [72.10] "select a cluster of the LEDs having light associated therewith that is directed at the target, determined based on the first target location;"

180. Claim element [72.10] is patentably indistinct from [56.9] and is taught by Beam for the reasons discussed above. Section X.C.2.

181. Beam discloses that, after determining the location of the other traffic, Beam's controller "will then control the light output of *a group selected from a multiplicity of narrow angle beams* (microbeams) which comprise the overall headlight beam pattern." EX1005, 2:53-59. Further, "[b]y controlling an area determined by analyzing the position of the lights sensed ahead, the area of the beam that would dazzle the driver will be darkened." EX1005, 2:56-3:3. This is possible because "[t]he *angular position or attenuation of each of the microbeams* is independently set" based on the "*spatial locations of the sources* [being] mapped into controller 108." EX1005, 4:46-48, 4:53-57. Thus, Beam selects the cluster of LEDs that correspond with the detected vehicle (via the location discussed above in [72.9]) based on the predetermined position and location of each LED (which is equivalent to knowing each LED's direction). I note that the selected cluster or group in Beam may consist of a single or multiple LEDs, depending on how much of the light field must be darkened. The result of this process is shown below, where a selected group of microbeams results in "illumination in the shaded areas being significantly reduced to protect the vision of oncoming drivers." EX1005, 4:21-24.

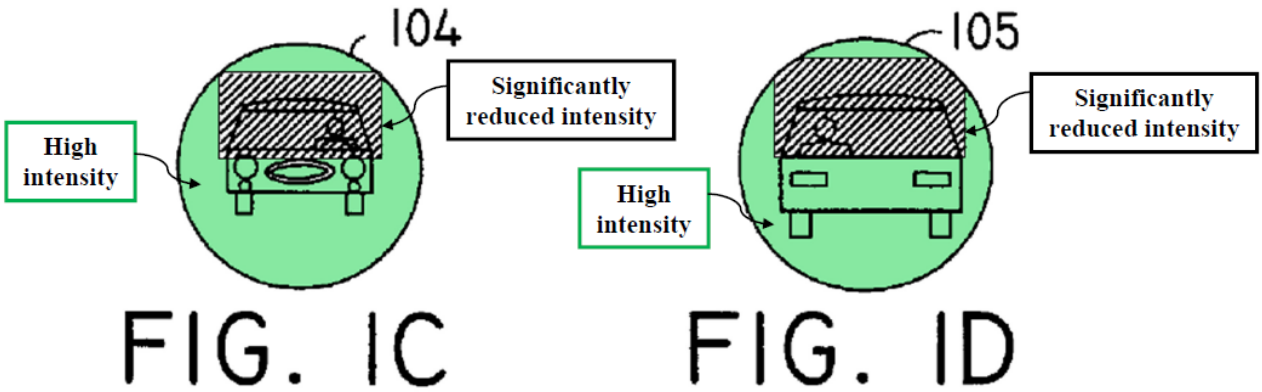

EX1005, FIGS. 1C-1D (annotated).

182. Beam's system uses an array of individually controllable LED's as the microbeam sources. EX1005, 5:3-16. So each LED is selectively controlled to produce a microbeam. Thus, the selection of microbeams described above would result in selecting a group of LEDs corresponding to the detected traffic.

183. In view the above, Beam discloses this element.

4. [72.11] "vary illumination provided to the target by the selected cluster, relative to illumination provided to areas laterally adjacent to the target and provided by at least one LED different from LEDs in the selected cluster;

184. Claim element [72.11] is patentably indistinct from [56.10] and is taught by Beam for the reasons discussed above. Section X.C.2. The reduced illumination intensity of [56.10] is a type of variation in illumination as recited in [72.11]. As discussed in [56.10] and shown below, this variation occurs with respect to the adjacent (the adjacency can be both laterally and otherwise) higher intensity illumination.

185. As I discuss above, Beam discloses "[b]y controlling an area determined by analyzing the position of the lights sensed ahead, *the area of the beam that would dazzle the driver will be darkened*." EX1005, 2:56-3:3. As shown below, the selected group of LEDs results in "illumination in the shaded areas being *significantly reduced to protect the vision of oncoming drivers*." EX1005, 4:21-24. Reducing illumination is "vary[ing] illumination" as claimed because the reduced illumination lowers the intensity of the LEDs. And, as Beam explains, "[t]he resulting beam is at *full intensity except* in areas that would dazzle a driver ahead." EX1005, 4:57-59. This high intensity area is created by a "second, different cluster" of LEDs (microbeam sources) as claimed. EX1005, 4:57-59. As shown below, the example of a reduced intensity area is inside of a field of higher intensity that extends on both sides (i.e., laterally adjacent to), above, and below, the reduced intensity area.

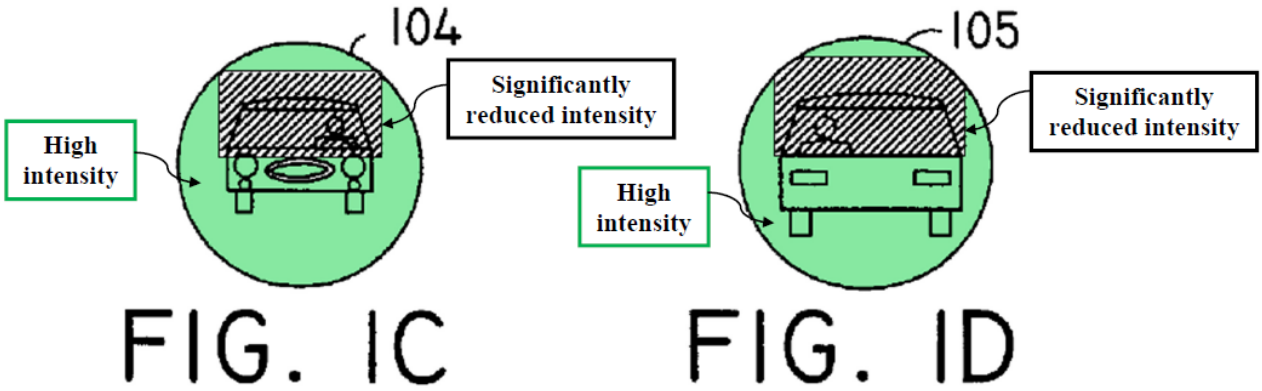

EX1005, FIGS. 1C-1D (annotated).

186. In view the above, Beam discloses this element.

5. [72.12] "maintain a variance of illumination provided to the target relative to the laterally adjacent areas, when subsequent data from one or more of the cameras indicates a change in position of the target relative to the motor vehicle, by repeating the determination of target location, selection of the cluster and variance to illumination provided to the target, relative to the laterally adjacent areas, based on the subsequent data."

187. Beam discloses that "[a]s the positions of both vehicles move, the blanked area tracks the location of the oncoming vehicle, dynamically varying in position and in size." EX1005, 6:24-27. Thus, Beam's system actively follows (tracks) the target vehicle and updates the area of diminished illumination to account for the relative motion of the target vehicle and the AABH. Beam would accomplish this step by repeating the determination, selection, and variance steps discussed above because of the automatic nature of Beam's system. EX1005, 1:5-9.

188. In view the above, Beam discloses this element.

J. Claim 73 "The illuminating device of claim. 72, wherein: the variation of illumination provided to the target includes variation in at least one of color or intensity at least a change of at least one LED of the selected cluster to a non-emitting state; the cluster includes a plurality of the LEDs and the cluster includes non-contiguous LEDs; the light directed at the target is determined based at least in part on known directionality of light emitted by the first cluster exiting/ram the at least one headlamp; and at least one of the first data or the subsequent data includes image data."

189. Claim 73 is patentably indistinct from claim 65, and is disclosed or rendered obvious by Beam for the same reasons. Sections X.H.

190. As discussed above, As discussed above, Beam's sensor is a camera, which produces image data. Section X.6; EX1005, 6:12-13. For the changed emission element, Beam reduces the illumination of the LEDs in the selected group, which a POSA would have understood as reducing "intensity" of the LEDs as claimed. EX1005, 4:21-25. Beam discloses determining "which *microbeams* must be reduced in intensity to protect the other drivers," which confirms that multiple microbeams (LEDs) would be part of a group. EX1005, 4:16-19. Further, a POSA would have understood, or at least found it obvious, that a plurality of LEDs would have been selected as part of Beam's selected "group" because a single LED is unlikely to cover sufficient area to fully shade a target vehicle as shown in Figures 1C-1D. EX1005, 2:53-56. This is especially the case as the target vehicle gets closer and takes up more of the illuminated area. I note that the changed emissions element includes three changes presented in the alternative (intensity, color, non-emitting state), and thus I understand that Beam's change in intensity discloses this term.

191. For the non-contiguous element, Beam also discloses that the glare-reduction process "can be done for any number of vehicles that fall in the headlight beam [area]." EX1005, 2:62-65. This means that when there are two or more separated vehicle targets, as would be the case in most situations with multiple other vehicles present, Beam's system would select a cluster of LEDs

that are non-contiguous to cover all of the vehicle targets. For example, in the multi-vehicle situation in Beam's Figure 1, applying the disclosed dimmed areas as shown in Figures 1C-1D would have resulted in larger areas of fully illuminated beam (and thus, undimmed LEDs) between oncoming vehicle 102 and preceding vehicle 103. I have created an annotated Figure 1 that shows the non-contiguous dimmed areas of Figures 1C-1D. The fact that there are high intensity areas (green) between the low intensity areas (grey) means that the LEDs creating the low intensity areas are not contiguous because they are separated by LEDs emitting high intensity light to form the green areas.

192. Regarding the known aimings element, as discussed above, Beam selects the LEDs in the first cluster for glare prevention because "[t]he *angular position or attenuation of each of the[] microbeams* is independently set" based on the "*spatial locations of the sources* [being] mapped into controller 108." EX1005, 4:53-57, 4:46-48. Thus, each LED has a preset direction, or "known aiming" as claimed.

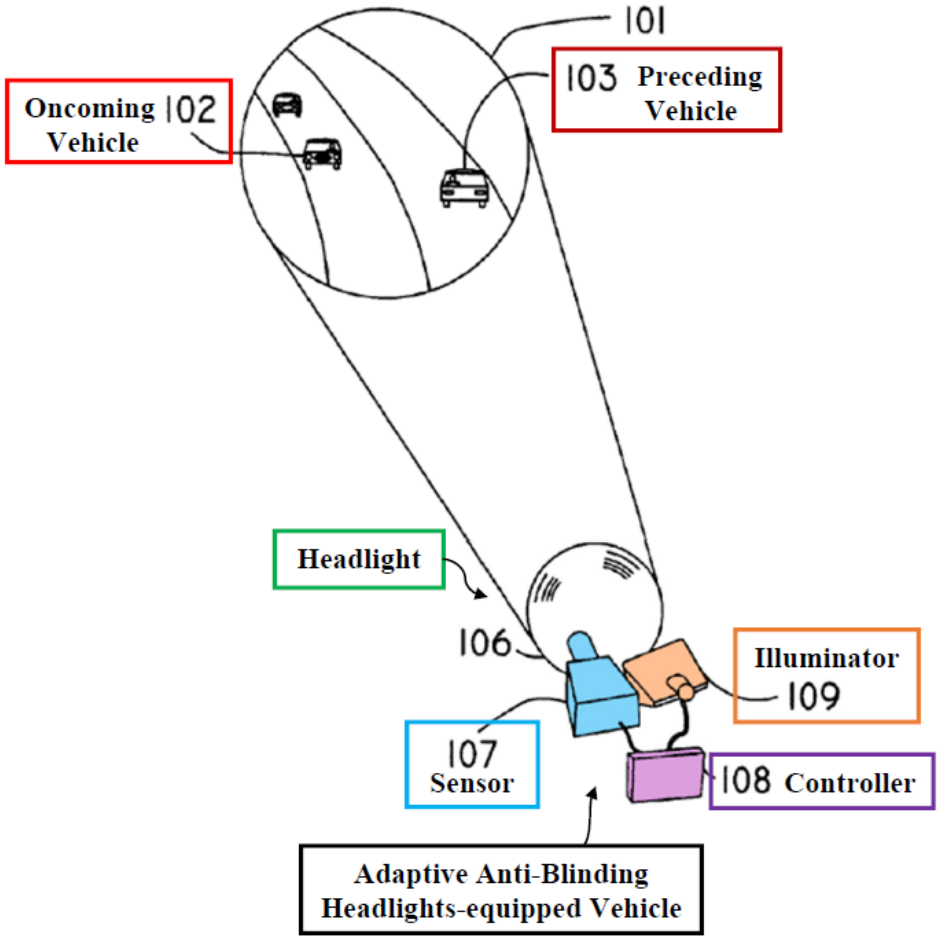

EX1005, FIG. 1 (annotated, excerpt).

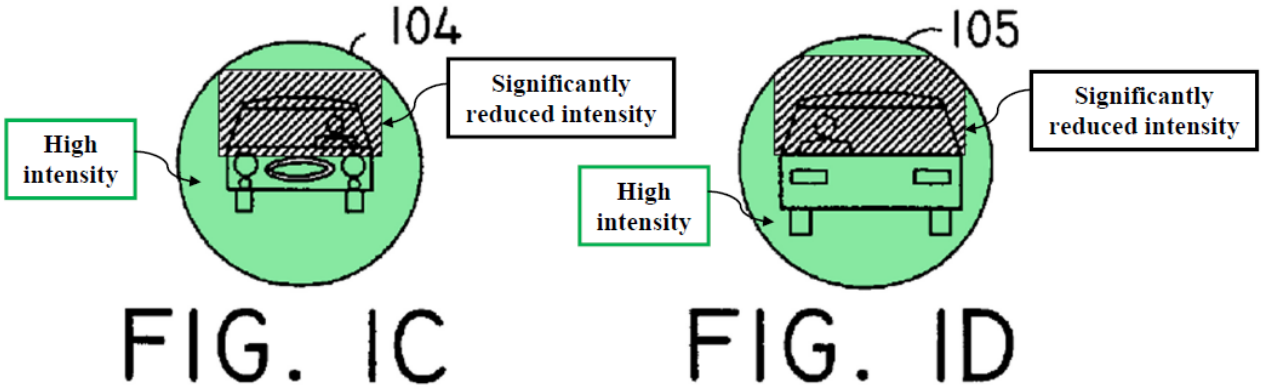

EX1005, FIGS. 1C-1D (annotated).

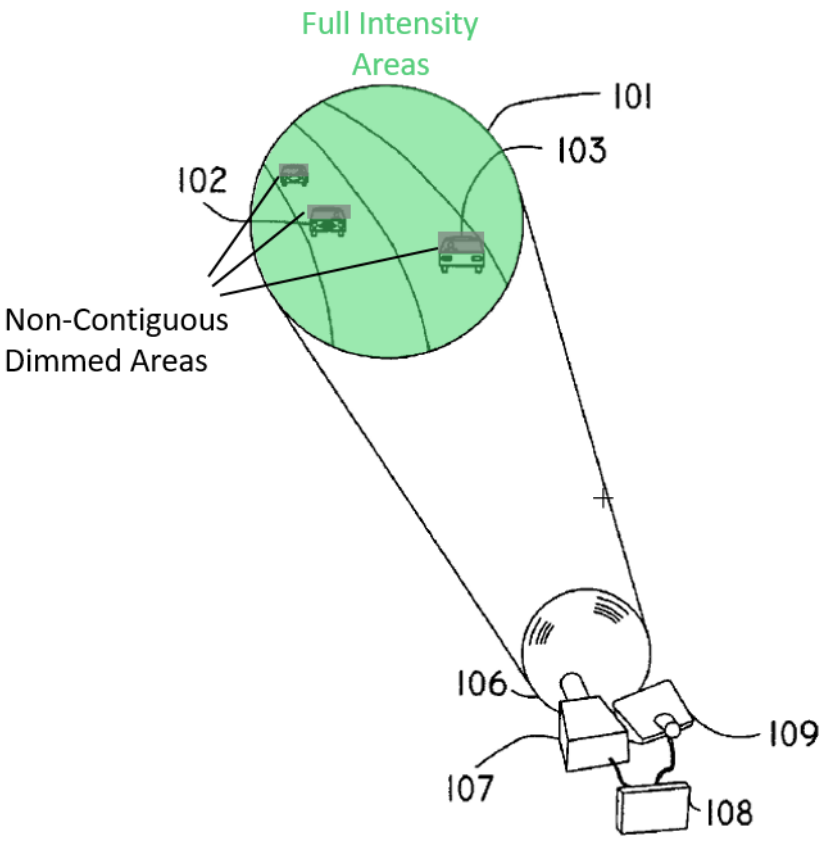

EX1005, FIG. 1 (annotated, excerpt).

193. In view the above, Beam discloses this claim.

K. Independent Claim 80 Instructions

1. [80.8] "identify, based on data received from one or more of the sensors, a plurality of positions associated with the target as the target move relative to the motor vehicle; and"

194. Claim element [80.8] is similar to claim element [56.8], but further requires that the system identify "a plurality of positions" of the target vehicle as the target moves. Section X.C.1. As discussed in claim element [72.12], Beam discloses tracking the target vehicle as it moves and updating the position

accordingly. Section X.I.5. Thus, Beam's system identifies a plurality of positions associated with vehicle movement as claimed.

195. As discussed above, Beam's "controller module uses the sensor spatial data (video) to determine whether there are illumination sources (headlights or tail lights) present in the headlight's field-of-view, [and] *determines their location* relative to the Adaptive Anti-Blinding Headlights beam." EX1005, 6:14-19. Thus, Beam's system determines a location of the other vehicle (via headlights or taillights) using the coordinate-specific information (the video data from the camera). A POSA would have understood, or at least found it obvious, that Beam's system stores those locations using some type of spatial coordinate to identify where the other vehicle is located with respect to the AABH. EX1005, 5:46-48. A POSA would understand that coordinates define the location of the target vehicle, and that this location would include the vertical and horizontal position as claimed. This enables Beam's system to determine which areas in the overall illuminated area need to be "blanked" to reduce the illumination, preventing other drivers from being blinded. EX1005, 5:33-54. Beam discloses that "[a]s the positions of both vehicles move, the blanked area tracks the location of the oncoming vehicle, dynamically varying in position and in size." EX1005, 6:24-27. Thus, Beam's system actively follows (tracks) the target vehicle and updates the area of

diminished illumination to account for the relative motion of the target vehicle and the AABH.

196. In view the above, Beam discloses this element.

2. [80.9] "change, responsive to the positions associated with the target, first light associated with one or more LEDs aimed toward at least a portion of the target, relative to second light associated with other one or more of the LEDs aimed laterally adjacent the target on either side, as the target moves relative to the motor vehicle."

197. This Claim element [80.9] is disclosed by Beam's vehicle tracking functionality. Beam controls the beam area "by analyzing the position of the lights sensed ahead" and reducing the intensity of the beam that would dazzle the driver. EX1005, 2:56-3:3. Figures 1C-1D show the result, where the selected group of microbeams (formed by selected LEDs) results in "illumination in the shaded areas being significantly reduced to protect the vision of oncoming drivers." EX1005, 4:21-25. This reduced intensity light in the selected group discloses the "change" of the selected cluster. Further, "[t]he resulting beam is at *full intensity* except in areas that would dazzle a driver ahead," which means there are at least two different illumination intensities—full intensity illumination and reduced illumination at the target. EX1005, 4:57-59. Thus, the first light in Beam (the reduced intensity light) is formed in a broader field of different intensity (the full intensity light), including higher intensity light positioned laterally. Beam's reduced illumination area targets the portion of the

other vehicle containing the driver. EX1005, 4:9-25. As shown by the green, high-intensity illumination below, areas on both sides (laterally adjacent), above, and below the reduced illumination beam are part of the full-intensity beam.

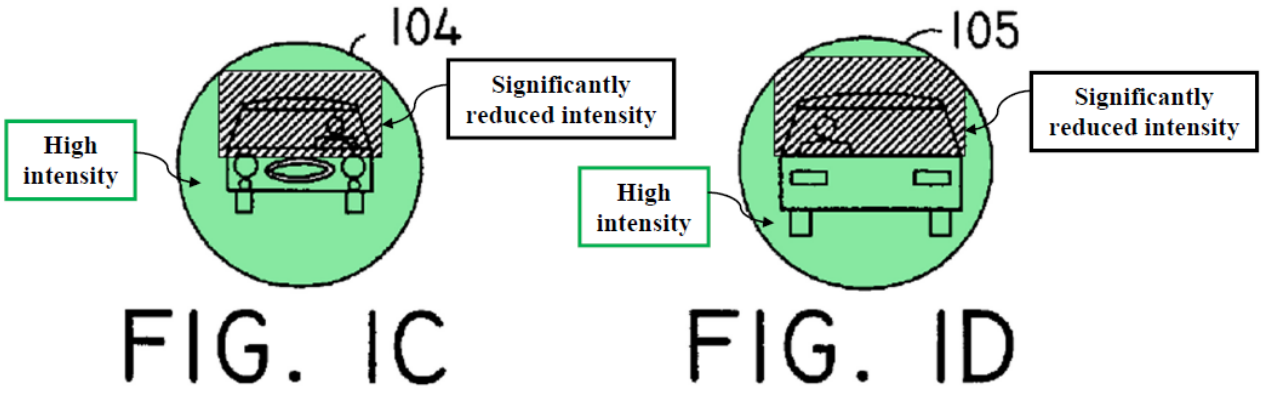

EX1005, FIGS. 1C-1D (annotated).

198. Beam discloses that "[a]s the positions of both vehicles move, the blanked area tracks the location of the oncoming vehicle, dynamically varying in position and in size." EX1005, 6:24-27. Thus, Beam's system actively follows (tracks) the target vehicle and updates or changes the area of diminished illumination to account for the relative motion of the target vehicle and the AABH.

199. In view the above, Beam discloses this element.

L. Claim 81 "The illuminating device of claim 80, wherein: the data includes image data; the memory further stores instructions that when executed by one or more processors of the controller, enable the controller to select a first cluster of LEDs, associated with the first light, for the change, based at least in part on known aimings of the first light associated with the first cluster having a correlation to the at least the portion, the known aimings based at least in part on at least one of known directionality of light emitted by the first cluster or known directionality of light emitted by the first cluster exiting the headlamp; and the change to emission of one or more LEDs aimed to towards the at least the portion includes a change to intensity or color or a chance of a least one of the LEDs to a non-emitting state."

200. Claim 81 is patentably indistinct from claim 57 and is taught by Beam for the same reasons. Sections X.D.

201. As I discuss above, Beam's sensor is a camera, which produces image data. Section X.6; EX1005, 6:12-13. For the changed emission element, Beam reduces the illumination of the LEDs in the selected group, which a POSA would have understood as reducing "intensity" of the LEDs as claimed. EX1005, 4:21-25. Beam discloses determining "which *microbeams* must be reduced in intensity to protect the other drivers," which confirms that multiple microbeams (LEDs) would be part of a group. EX1005, 4:16-19. Further, a POSA would have understood, or at least found it obvious, that a plurality of LEDs would have been selected as part of Beam's selected "group" because a single LED is unlikely to cover sufficient area to fully shade a target vehicle as shown in Figures 1C-1D. EX1005, 2:53-56. This is especially the case as the

target vehicle gets closer and takes up more of the illuminated area. I note that the changed emissions element includes three changes presented in the alternative (intensity, color, non-emitting state), and thus I understand that Beam's change in intensity discloses this term.

202. Regarding the known aimings element, as discussed in [56.9], Beam selects the LEDs in the first cluster for glare prevention because "[t]he *angular position or attenuation of each of the[] microbeams* is independently set" based on the "*spatial locations of the sources* [being] mapped into controller 108." EX1005, 4:46-48, 4:53-57. Thus, each LED has a preset direction, or "known aiming" as claimed.

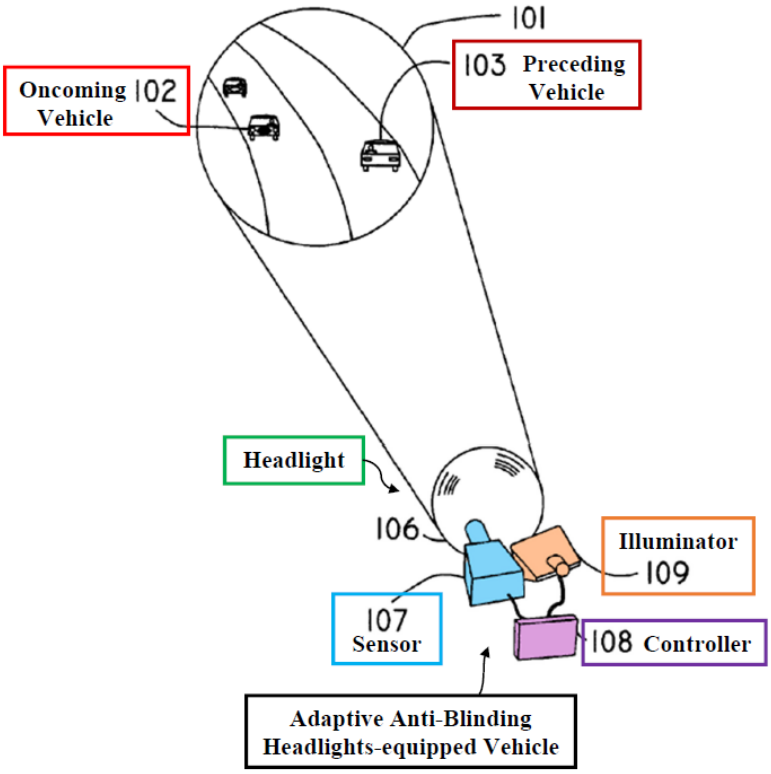

EX1005, FIG. 1 (excerpt, annotated).

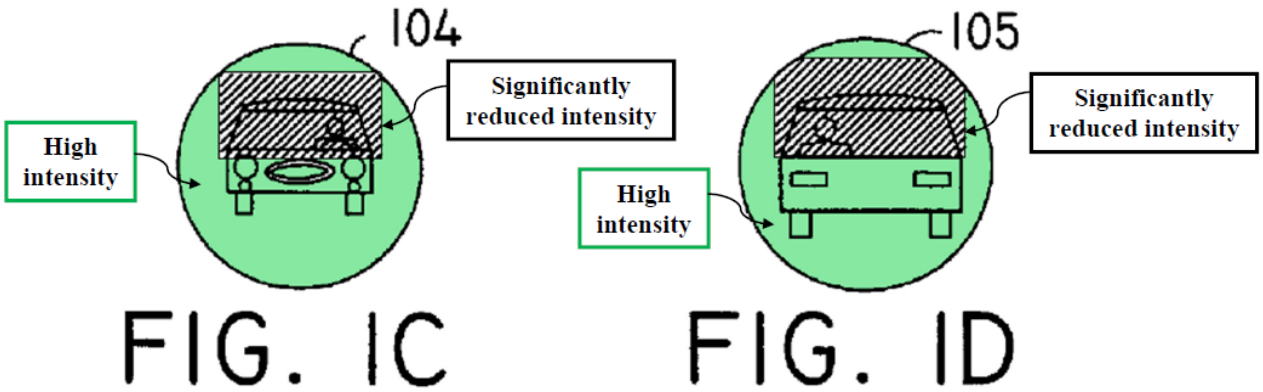

EX1005, FIGS. 1C-1D (excerpt, annotated).

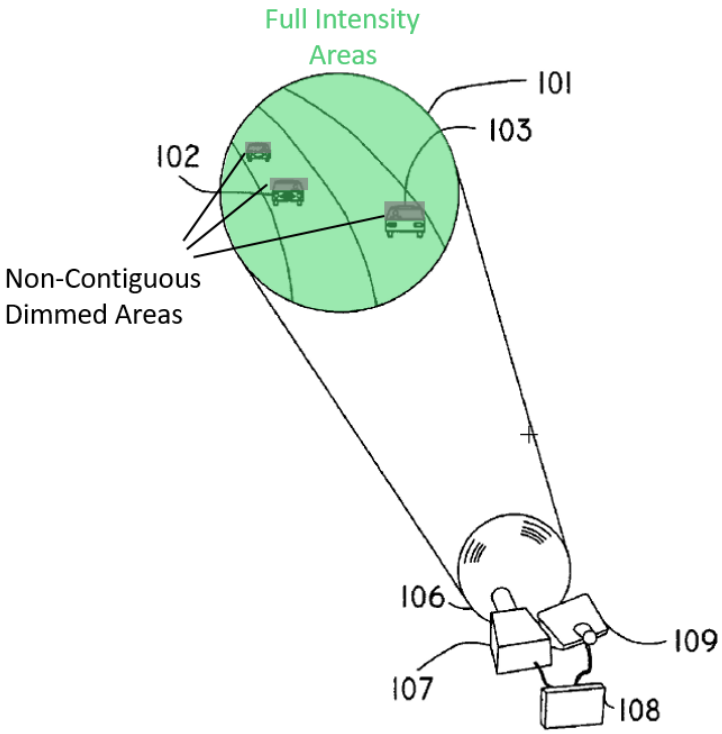

EX1005, FIG. 1 (excerpt, annotated).

203. In view the above, Beam discloses this claim.

204. Thus, Beam and Satonaka render obvious claims 24, 25, 30-33, 38-41, 46-49, and 54-55 of the ’551 patent.

XI. GROUND 2: BEAM, SATONAKA, AND KOBAYASHI RENDER OBVIOUS CLAIMS 58–61, 66–69, 74–77, AND 82–85.

A. A POSA would have been motivated to combine Beam, Satonaka, and Kobayashi with a reasonable expectation of success.

205. As above, a POSA would have motivated to incorporate Satonaka's coordinate teachings in Beam's system. Section X.A. Kobayashi is from the same technical field as Beam and Satonaka—adaptive vehicle headlights. EX1008, Abstract, 1:10-2:35. A POSA would have been motivated to modify Beam's adaptive anti-blinding *headlamp* system to use known *map data* functions, as implemented by Kobayashi's ECU 10, to further *control* Beam's *directional LEDs*, thereby improving driver safety—an express purpose of Beam's AABH system. *See, e.g.*, EX1005, 3:8-44, 5:33-54, 6:53-7:13.

206. *First*, a POSA would have understood that including an additional source of input data for Beam's controller 108, namely from the *known technique* using *map data* as in Kobayashi, would have enhanced Beam's AABH system by increasing or directing illumination *based on the road curvature*, thereby improving road safety (including driver and non-driver, e.g., pedestrian safety), along with driver's comfort, and providing light to where it is needed for the vehicle driver. Such map data input benefits were well known for use in vehicle headlamps. *See, e.g.*, EX1023, 525 ("The introduction of data coming from accurate navigation systems comes as a first logical consequence. This predictive system would make possible to anticipate the needed light

distribution avoiding dangerous changes in the beam during critical driving conditions such as curves and crossing."); EX1025, 186 ("The newly developed moveable headlamps are controlled by path prediction based on the vehicle's dynamics and navigation data."). *Second*, a POSA would have incorporated the *known components* of Kobayashi's road profile calculating means 2 and vehicle advancing direction predicting means 3 (e.g., including GPS navigation device 29 as described in EX1008, Abstract, 1:10-35, 4:60-64 and Figures 1, 10, 12) into Beam's AABH system (e.g., into sensor 107 and controller 108). Kobayashi's techniques of means 2 and means 3 are examples of practical execution of the Beam's discussion of "[d]ata from sensor 107 are input to a controller 108," thereby controlling illuminator 109 to illuminate an area 101. EX1005, 4:10-21. Kobayashi demonstrates that the GPS navigation devices are built to be connected with means 2, EX1008, 17:14-32, and which can synthetically predict a vehicle advancing direction at which the driver aims by means 3, EX1008, 4:6-8. Doing so would have provided *road curvature* data of Beam's detected scene 101, allowing Beam's AABH system to increase illumination in a direction of the *road curvature in advance of the curve* like Kobayashi, thereby further improving safety.

207. Beam and Kobayashi's systems are from the same field of motor vehicle headlamps (headlights), and include the same building blocks. Both

disclose controllable (adaptive) headlamps with dynamic illumination to provide the most appropriate light, in the right direction and right area. And both include, for example, components such as controllable headlamps, input sensors, and one or more controllers, processors, and memory to execute commands and control the direction, shape, and/or intensity of light output emanating from the headlamps.

208. For clarity, a POSA would have understood that processors in this field indeed generally include memory, such as with ECUs, and that such common controller and ECU components were well known. *See*, *e.g.*, EX1034, FIG. 2, 1:24-38 (describing ECUs controlling a headlamp turning-on operation in response to certain control inputs), 14:7-51 (describing ECU 12i shown in Figure 2 including input/output interface 58i, CPU (processor), and three types of memory (RAM, ROM, and EPROM)):

FIG. 2

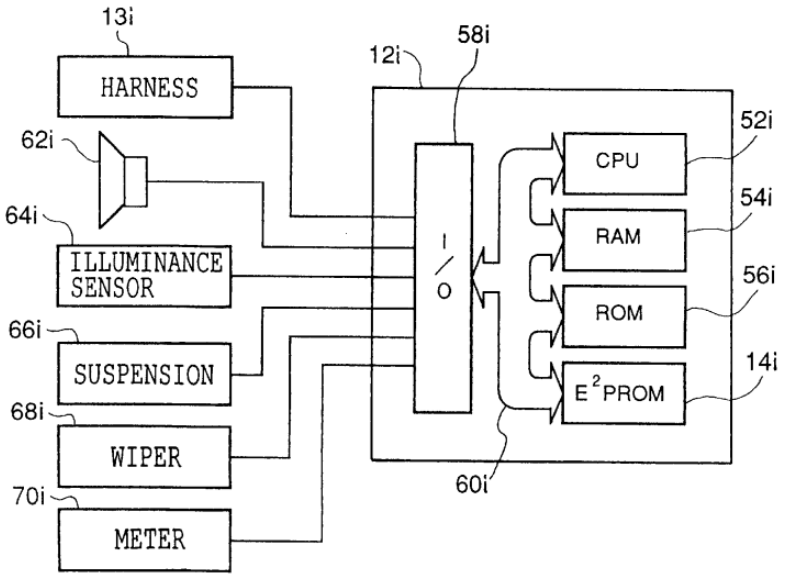

EX1034, FIG. 2.

209. Beam and Kobayashi's controllers/ECUs are shown below to illustrate the similarity:

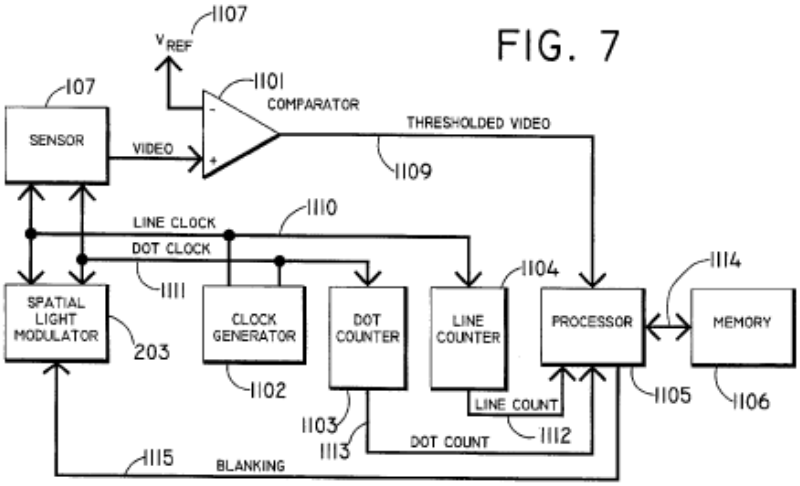

EX1005, FIG. 7.

FIG. 12

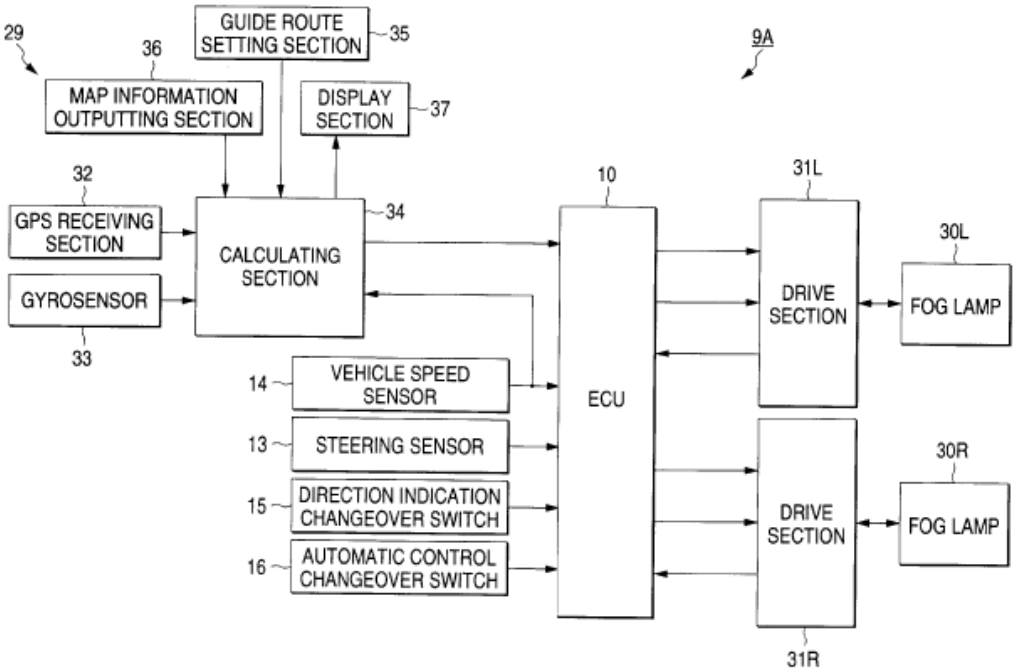

EX1008, FIG. 12.

210. Moreover, driver safety is paramount in both Beam's and Kobayashi's systems—for both the driver of the vehicle equipped with the adaptive headlamp system and others on the road. *See, e.g.*, EX1005, 3:8-44, 5:33-54, 6:53-7:13; EX1008, 15:6-28.

211. More specifically, Beam's *techniques* and system of controlling individual LEDs emphasizes safety of the vehicle's driver and other drivers. EX1005, 3:8-44; 6:53-7:13. Beam recognizes that controllable headlamps "provide greatly improved safety and comfort to the motoring public," and that providing a "brighter headlight beam while simultaneously protecting the drivers of all vehicles ahead," increases safety. EX1005, 3:8-44. Beam's AABH

enables "the driver to see more clearly at night," while protecting other drivers from glare. EX1005, 3:8-44.

212. Beam's controller 108 uses input data from sensor 107 to determine which LEDs to adjust the light protections to other vehicle drivers on the road, while maintaining appropriate forward lighting. EX1005, 4:16-19. The system "*determine[s] the location of light sources* forward of the apparatus and us[es] that information to *control the intensity, and/or the angular position*, of one or more" LEDs. *See* EX1005, Abstract. Such control is "*dynamically varying* in position and in size," in response to the control input. EX1005, 5:46-54.

213. Beam also recognizes prior systems that control headlamps in response to changes in the vehicle's position (e.g., tilt on a hill) and steering mechanism (e.g., along a curve) and acknowledges those systems' safety benefits—while noting that more active systems decrease the compromise between "reducing glare and providing enough light to the driver for adequate visibility." *See* EX1005, 1:60-2:6, 2:15-22. Indeed, Beam notes that "[o]ne of the problems exhibited by existing headlights lies in the fact that the headlight operates in only one of two modes, either as a 'high beam' or as a 'low beam.'" EX1005, 1:20-34.

214. Beam does not specifically disclose using map data, such as from GPS or navigation beacons, as an input to control the intensity and/or angular

position of the LEDs (or their resultant beam) of its system, but it would have been obvious to a POSA to do so. This would have made Beam's system even more active and sophisticated than prior systems, as Beam seeks to do (*see* EX1005, 2:15-22), and further achieves Beam's purpose of improving driver safety. EX1005, 3:8-44; 6:53-7:13. Kobayashi provides additional active and sophisticated techniques, specifically map data-based control.

215. Kobayashi's *techniques and system components*, like Beam, seek to enhance driver safety—using *map data*-based control to do so. EX1008, 15:6-28. Specifically, Kobayashi explains that controlling the shape of the light to correspond with the driver's changing line of sight (ahead of a curve on a *curved road*) enhances safety. EX1008, 15:6-28. Kobayashi's road profile calculating means 2 and vehicle advancing direction predicting means 3 are inputs to control means 4, which alters the direction of light from headlamp 5 in response to *map data* input, thus directing light where it is most needed at a given time. EX1008, 3:9-50, FIG. 1. Kobayashi discloses whole or partial directional control, including via portions of the lighting device or components composing the lighting device, e.g., reflecting mirrors, plurality of lighting devices, etc. *See generally* EX1008, 6:4-62. Kobayashi's system responds to real-world conditions, multiple curves, intersections, etc., *see* EX1008, 11:34-14:52, including representative lookup tables, *see also* EX1008, 17:41-50.

216. As an example, Kobayashi's Figure 10 shows that the illumination control (including shaping/reshaping light and directionality) of vehicle K can be planned and controlled on roads with multiple curves, r1, R1, etc. For example, when vehicle K turns to the left (point A), the left shoulder is illuminated (the shape is adjusted towards the left shoulder). Likewise, when vehicle K turns to the right on a subsequent curve (point C), the right shoulder is illuminated (the light is reshaped towards the right shoulder). EX1008, 14:53-15:28; *see also* EX1008, FIG. 12, 17:3-18:67.

217. It is my opinion, therefore, that a POSA would have understood that including an additional source of input data for Beam's controller 108, namely map data as in Kobayashi, would have enhanced Beam's AABH system by increasing illumination based on the road curvature (and directing light to needed areas), thereby improving driver safety. Doing so would have merely been applying Kobayashi's known technique (using map data from Kobayashi's GPS to shape and re-shape light and/or adjust intensity) to Beam's similar, known device (dynamic AAHB system that directs light to needed areas), in the same way. Kobayashi's known technique of utilizing map data to control light shape and/or intensity around curves is fully described along with its benefits (e.g., improved safety), such that a skilled artisan would have readily applied it to similar systems, such as Beam's AABH system, in the same way.

218. Indeed, such GPS/navigation map data control inputs were shown to be advantageous and well known. As described in Section VIII.A, headlamps were known to be "controlled by path prediction based on a vehicle's dynamics and navigation data." EX1025, 186. Kobayashi explained further in a separate publication (EX1026) that vehicle sensors, with the addition of data, such as map data, from GPS navigation systems gave additional advantages by providing more accurate information on driving regions. EX1026, 461-462 ("To obtain more accurate information on driving regions, it is advantageous to use data from a GPS navigation system."). *See also* EX1024, 815-816. And as I have previously described, the increased accuracy of navigation systems at that time made it possible to anticipate the light distribution needed during critical driving conditions, such as curves and crossings—this principle was well known. EX1023, 525 ("This predictive system would make possible to anticipate the needed light distribution avoiding dangerous changes in the beam during critical driving conditions such as curves and crossing."); EX1027, Abstract.

219. Additionally, a POSA would have recognized that such a modification would have been nothing more than combining *known prior art elements* (e.g., Beam's adaptive, directional-controllable LED headlamps with Kobayashi's irradiating (light) directional control based on map data via road

profile calculating means 2 and vehicle advancing direction predicting means 3 (e.g., including GPS navigation device 29) according to *known methods* (disclosed in Kobayashi) to yield *predictable results* (e.g., improving safety for the vehicle equipped with the adaptive lighting system and other vehicles on the road, better directional control of the lighting where it is needed at a given time, preemptive control *before* the vehicle enters a *curve*, etc.).

220. A POSA would have had a reasonable expectation of success combining Beam and Kobayashi. Indeed, a POSA would have understood *how* to combine the teachings of Beam and Kobayashi, for example, by simply modifying the software instructions stored in the memory of Beam's controller/processor (e.g., ECU) to adjust and direct light of the LEDs appropriately in view of Kobayashi's map data. A POSA would also have found it straightforward to combine Kobayashi's road profile calculating means 2 and vehicle advancing direction predicting means 3 (e.g., including GPS navigation device 29) with Beam's system.

221. Such modifications would have been routine and well within the skill of a POSA due to the similarities in Beam's and Kobayashi's adaptive light control systems and methods—all of the common components of both Beam's and Kobayashi's system were well known and there would have been no limitations for a POSA to make such modification. Indeed, both Beam and

Kobayashi describe several different control inputs—a POSA would have understood that adding an additional control input would have been a routine, simple programming and system integration exercise. Indeed, processors or ECUs such as in Beam's and Kobayashi's system are readily reprogrammed, designed for additional inputs, etc. This type of programming and sensor addition was common by the earliest possible priority date of the '551 patent. *See* EX1034.

222. As I have explained, in applying Kobayashi's technique to Beam, a POSA would have simply been applying a known technique in a predictable way—namely, *controlling LED headlamps/headlights in part based on map data*—in the same way as already disclosed in the art. And in combining Beam's system with Kobayashi's road profile calculating means 2 and vehicle advancing direction predicting means 3 (e.g., simply revising control input/output on an ECU), a POSA would have simply been combining known elements according to known methods (disclosed in Kobayashi) to yield predictable results (additional light control for improving safety for the vehicle equipped with the adaptive lighting system and other vehicles on the road).

223. My experience at General Motors Corporation (1989 to 1993) engaged in automotive lighting technology development and applications, and at North American Lighting, Inc., a Koito Group Company, (1993 to 2007) in

charge of automotive lighting technology R&D, both support these positions. I had first-hand knowledge and practice in strategic planning and executions for technology implementation including LED and adaptive front-lighting system (AFS) technologies.

224. Now that I have provided a detailed overview of why it would have been obvious to combine Beam and Kobayashi, I address each of the claim elements and specific disclosures in the references that show such obviousness.

B. Claims 58/66/74/82 "The illuminating device of claim 56, wherein the memory further stores instructions that when executed by one or more processors of the controller, enable the controller to: identify an upcoming road curvature along a road on which the motor vehicle is traveling; and accommodate the upcoming road curvature by adaptation of a light pattern of at least one of the at least one headlamps."

225. As explained above, a POSA would have been motived to combine Beam with Kobayashi to add map-based curve anticipation to improve performance of Beam's system. Section XI.A. Kobayashi discloses a lighting device that steers light ("changing an irradiating direction") based in part on map data received from GPS navigation device 29, controlled via ECU 10. EX1008, Abstract, 17:8-15. For example, "the vehicle advancing direction is predicted" and "irradiation control of the [headlight] lamp is conducted in accordance with the course." EX1008, 17:51-61. Kobayashi uses map data from GPS navigation device 29 to predict and adjust illumination toward an

advancing direction of the vehicle, including tracking upcoming road curvatures. EX1008, Abstract, 1:10-2:35, 4:60-64, FIGS. 1, 10, 12.

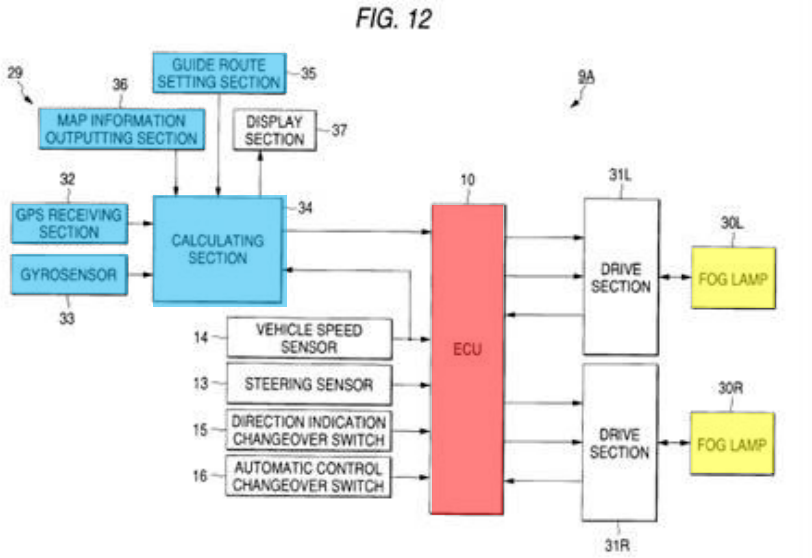

EX1008, FIG. 12 (annotated).

226. A POSA would have incorporated Kobayashi's road profile calculating means 2, EX1008, Abstract, 1:10-2:35, 4:60-64, FIGS. 1, 10, 12, into Beam's AABH (e.g., with sensor 107 and controller 108). Section XI.A. By including an additional data source for Beam's controller 108, Kobayashi's map data, a POSA would have realized the safety enhancement to Beam's AABH by increasing illumination based on the road curvature.

227. In view of the above, Beam, Satonaka, and Kobayshi render obvious these claims.

C. Claims 59/67/75/83 "The illuminating device of claim 58, wherein: the change to emission of the one or more LEDs aimed towards the at least the portion includes a change to intensity or color or a change of at least one of the LEDs to a non-emitting state; the memory further stores instructions that when executed by one or more processors of the controller, enable the controller to select a first cluster of LEDs, associated with the first light, for the change, based at least in part on known aimings of the first light associated with the first cluster having a correlation to the at least the portion, the known aimings based at least in part on at least one of known directionality of light emitted by the first cluster or known directionality of light emitted by the first cluster exiting the headlamp; and the memory further stores instructions that when executed by one or more processors of the controller, enable the controller to accommodate the road curvature by changing illumination in at least a direction of the road curvature by adaptation of the light pattern in at least one of color, intensity or spatial distribution by modification of light associated with one or more of the LEDs."

228. The first elements of these claims are patentably indistinct from claim 57, and disclosed by Beam for the same reasons. Section X.D. The final element of this claim is similar to claim 58, but requires that the road curvature tracking be accomplished by "changing illumination in at least a direction of the road curvature by adaptation of the light pattern in at least one of color, intensity or spatial distribution by LEDs." Section XI.B. In Beam, a POSA would have been motivated to adapt the LED light pattern to illuminate the road curve by altering, for example, the intensity or distribution of the LEDs so that the curved roadway is properly lit.

229. As I discuss above, for the changed emission element, Beam reduces the illumination of the LEDs in the selected group, which a POSA would have understood as reducing "intensity" of the LEDs as claimed. EX1005, 4:21-25. Beam discloses determining "which *microbeams* must be reduced in intensity to protect the other drivers," which confirms that multiple microbeams (LEDs) would be part of a group. EX1005, 4:16-19. Further, a POSA would have understood, or at least found it obvious, that a plurality of LEDs would have been selected as part of Beam's selected "group" because a single LED is unlikely to cover sufficient area to fully shade a target vehicle as shown in Figures 1C-1D. EX1005, 2:53-56. This is especially the case as the target vehicle gets closer and takes up more of the illuminated area. I note that the changed emissions element includes three changes presented in the alternative (intensity, color, non-emitting state), and thus I understand that Beam's change in intensity discloses this term.

230. For the non-contiguous element, Beam also discloses that the glare-reduction process "can be done for any number of vehicles that fall in the headlight beam [area]." EX1005, 2:62-65. This means that when there are two or more separated vehicle targets, as would be the case in most situations with multiple other vehicles present, Beam's system would select a cluster of LEDs that are non-contiguous to cover all of the vehicle targets. For example, in the

multi-vehicle situation in Beam's Figure 1, applying the disclosed dimmed areas as shown in Figures 1C-1D would have resulted in larger areas of fully illuminated beam (and thus, undimmed LEDs) between oncoming vehicle 102 and preceding vehicle 103. I have created an annotated Figure 1 that shows the non-contiguous dimmed areas of Figures 1C-1D. The fact that there are high intensity areas (green) between the low intensity areas (grey) means that the LEDs creating the low intensity areas are not contiguous because they are separated by LEDs emitting high intensity light to form the green areas.

231. Regarding the known aimings element, as discussed in claim element [56.9], Beam selects the LEDs in the first cluster for glare prevention because "[t]he *angular position or attenuation of each of the[] microbeams* is independently set" based on the "*spatial locations of the sources* [being] mapped into controller 108." EX1005, 4:46-48, 4:53-57. Thus, each LED has a preset direction, or "known aiming" as claimed.

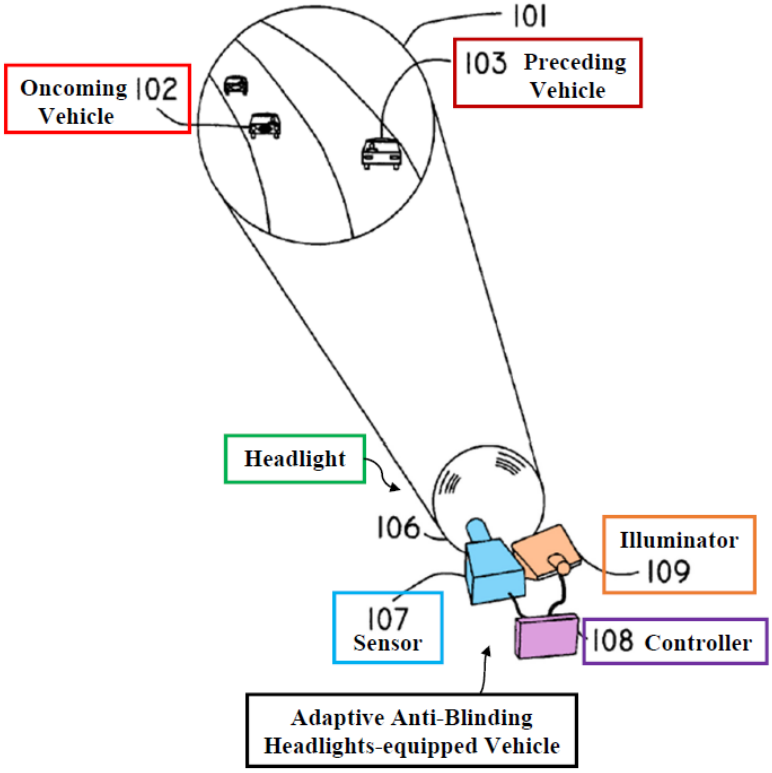

EX1005, FIG. 1 (excerpt, annotated).

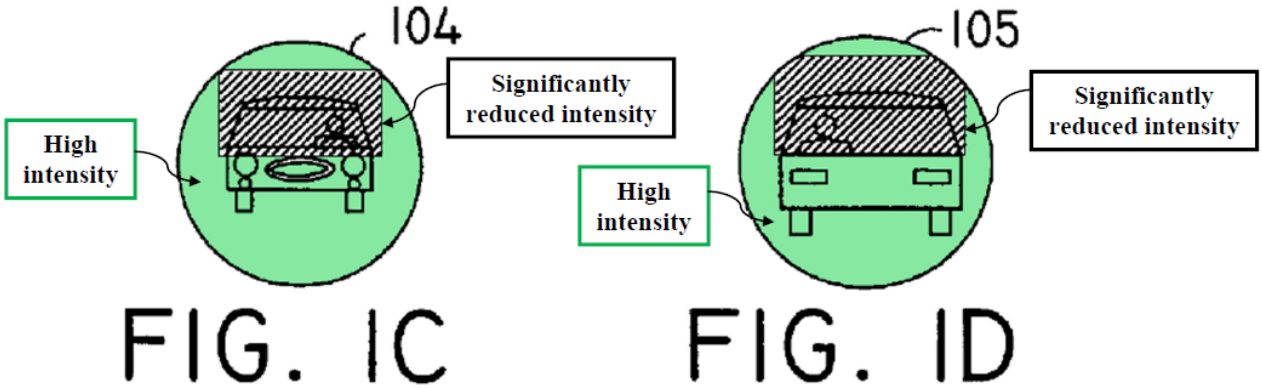

EX1005, FIGS. 1C-1D (excerpt, annotated).

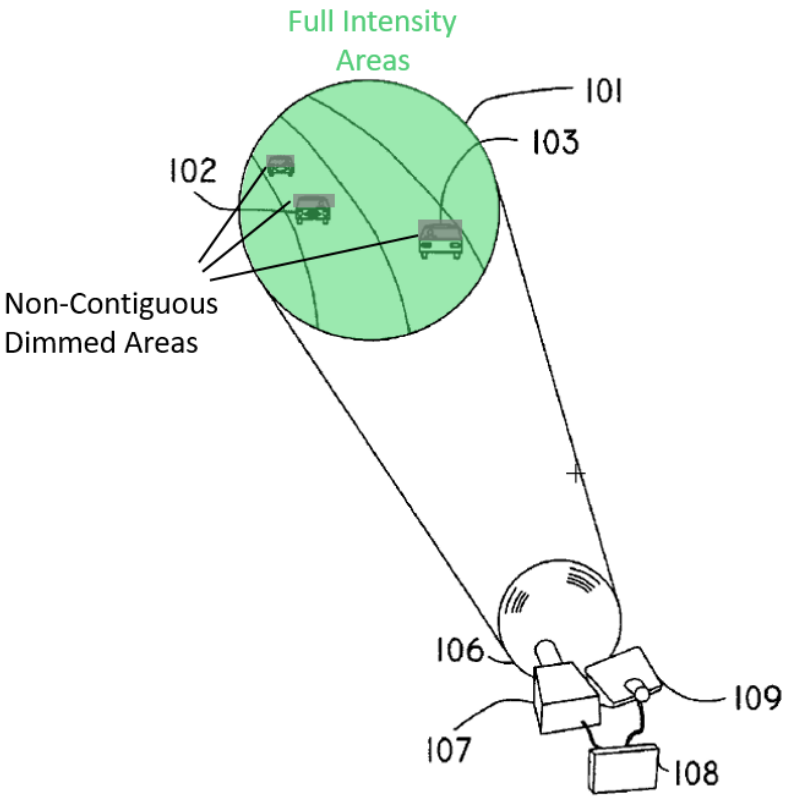

EX1005, FIG. 1 (excerpt, annotated).

232. As explained above, a POSA would have been motived to combine Beam with Kobayashi to add map-based curve anticipation to improve performance of Beam's system. Section XI.A. Kobayashi discloses a lighting device that steers light ("changing an irradiating direction") based in part on map data received from GPS navigation device 29, controlled via ECU 10. EX1008, Abstract, 17:8-15. For example, "the vehicle advancing direction is predicted" and "irradiation control of the [headlight] lamp is conducted in accordance with the course." EX1008, 17:49-64. Kobayashi uses map data from

GPS navigation device 29 to predict and adjust illumination toward an advancing direction of the vehicle, including tracking upcoming road curvatures. EX1008, Abstract, 1:10-2:35, 4:60-64, FIGS. 1, 10, 12.

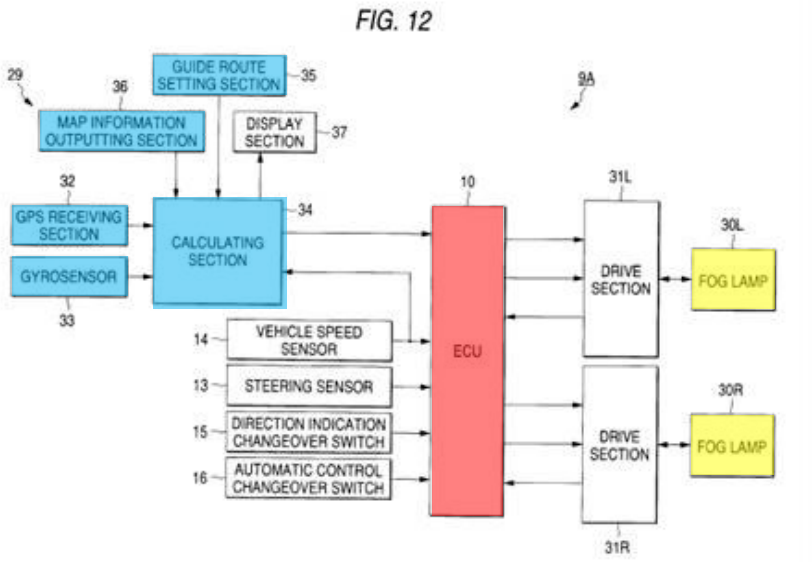

EX1008, FIG. 12 (annotated).

233. A POSA would have incorporated Kobayashi's road profile calculating means 2, EX1008, Abstract, 1:10-2:35, 4:60-64, FIGS. 1, 10, 12, into Beam's AABH (e.g., with sensor 107 and controller 108). Section XI.A. By including an additional data source for Beam's controller 108, Kobayashi's map data, a POSA would have realized the safety enhancement to Beam's AABH by increasing illumination based on the road curvature.

234. In view the above, Beam, Satonaka, and Kobayashi render obvious these claims.

D. Claims 60/68/76/84 "The illuminating device claim 58, wherein identification of the upcoming road curvature is based at least in part on map data and wherein the adaptation of the light pattern is based at least in part on the map data."

235. Kobayashi discloses a "map information output section 36" used with a GPS sensor to send "road data" to the ECU for the road curvature prediction process. EX1008, 17:16-28, 17:41-67. Kobayashi also uses a scheduled course of the vehicle set by the "guide route setting section 35" for "prediction of the vehicle advancing direction" to further adjust the path of the headlights. EX1008, 17:44-50. This predicted path is "map data" as claimed that is used to adapt the light pattern. Thus, modified Beam would include map data as part of its inputs to predict the upcoming road curvatures. Section XI.A.

236. In view of the above, Beam, Satonaka, and Kobayshi render obvious these claims.

E. Claim 61/69/77/85 "The illuminating device of claim 58, wherein the identification of the upcoming road curvature is based at least in part on sensor data provided by one or more of the sensors of the vehicle and wherein the adaptation of the light pattern is based in part on map data."

237. Kobayashi discloses sensors that are used as part of the road curvature prediction process. For example, a "GPS receiving section 32," a "gyrosensor 33," and a "vehicle speed sensor 14" are all used as input into the road prediction process. EX1008, 7:17-28. Kobayashi also discloses a scheduled course of the vehicle set by the "guide route setting section 35" for "prediction

of the vehicle advancing direction" to further adjust the path of the headlights. EX1008, 17:44-51, 17:17-28, 17:41-67. Thus, modified Beam would include various sensors and map data (the scheduled course of the vehicle) as part of its inputs to predict the upcoming road curvatures. Section XI.A.

238. In view the above, Beam, Satonaka, and Kobayashi render obvious these claims.

239. Thus, Beam, Satonaka, and Kobayashi render obvious claims 26-29, 58–61, 66–69, 74–77, and 82–85 in of the '551 patent.

XII. GROUND 3: KARLSSON AND NAKAMURA RENDER OBVIOUS CLAIMS 56, 57, 62–65, 70–73, 78–81, AND 86–87

240. It is my opinion that Karlsson explicitly or implicitly discloses every feature recited in claims 56, 57, 62–65, 70–73, 78–81, and 86–87. However, to avoid doubt, Karlsson is combined with Nakamura for claim elements [56.5]/[64.5]/[72.5]/[80.5] that require coordinates/coordinate-specific information be collected by the sensors and determined by the controller. As Nakamura demonstrates, the use of coordinates to identify the position of a detected vehicle was well-known, and thus these claims are at least obvious. Similarly, Nakamura is used to avoid doubt regarding Karlsson's image detection location disclosures relating to vertical and horizontal position for claim elements [56.8] and [56.9]. Nakamura is also used to avoid doubt

regarding Karlsson's ability to detect multiple vehicles in, for example, claim 57, claim elements [64.10], [64.11], claims 65 and 73.

241. Karlsson's adaptive headlight system detects oncoming traffic and dims a portion of the headlight beam to prevent glare. EX1010, Abstract, 2:30-35, 9:18-26. Controllable headlamps "significantly increase the driving comfort and the road safety," and "glaring and blinding of oncoming traffic [is] effectively prevented," increasing safety. EX1010, 9:18-26. Karlsson enables "higher light intensity," for example "when driving on dark, unilluminated roads," while protecting others from glare. EX1010, 1:21-26, 1:10-13.

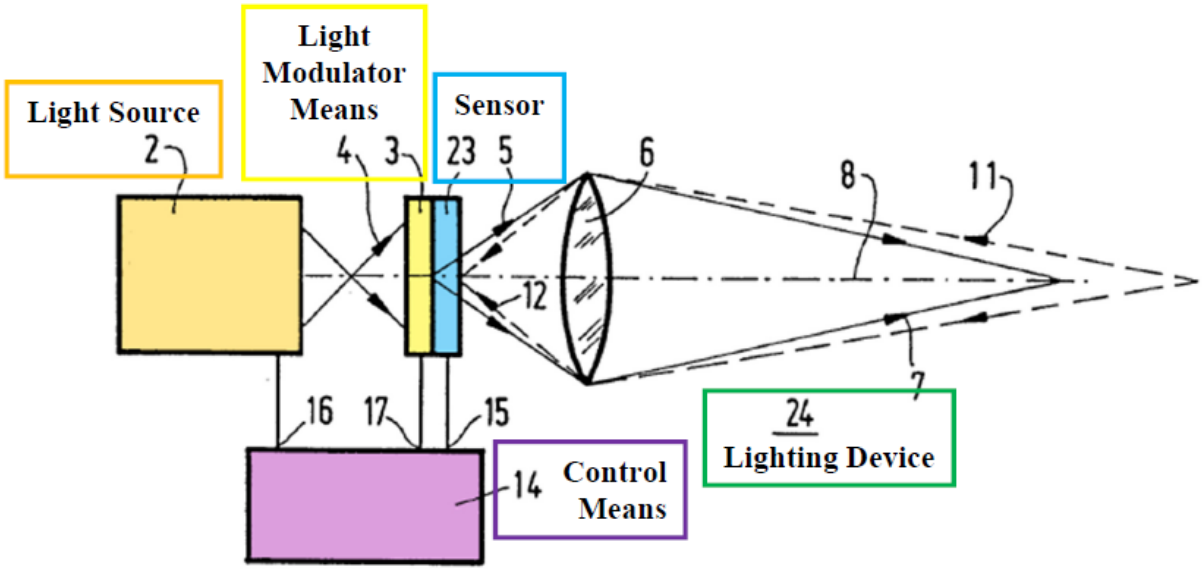

EX1010, FIG. 3 (annotated).

242. Karlsson's "sensors 9 and 23 are preferably designed to be capable of *precisely determining the direction* and intensity of the detected light 11." EX1010, 12:19-22. "[T]he electric signal fed to the input 15 of the control

means 14 by the light-sensitive sensor 9 is processed by the control means 14 into output signals…to control the lighting means." EX1010, 9:13-17. Thus, Karlsson discloses receiving an image and processing that to determine which area of the image contains a vehicle to control the headlights. However, Karlsson does not specify how the detected target images are stored and processed to determine which LEDs to be dimmed to avoid glare.

243. Nakamura discloses an automatic headlight system detects vehicles by processing an "image 120 that is [the] image that was obtained by camera 22." EX1013, ¶36. "Each pixel of the image that is formed by the image signal identifies a position based on the *coordinates* (X_n, Y_n)." EX1013¸ ¶25. Nakamura discloses a multi-step algorithm by which the pixels are processed to determine: (1) the boundaries of the roadway, and (2) the location of a vehicle in the roadway. EX1013, ¶¶36-47. Thus, Nakamura discloses that the pixels are each associated with a coordinate system (here, an X,Y system) to plot the location of the other traffic. Nakamura's algorithm uses coordinates to quantify the spatial locations of detected headlight targets in a system that is functionally similar to Karlsson's. EX1013, ¶¶36-47. Like Karlsson, Nakamura's camera detects lights from other vehicles' headlamps and tail lamps, and processes the resulting image to determine their location using X,Y pixel coordinates. EX1013, ¶¶36-47; EX1010, 2:30-35, 9:18-26, 13:24-14:4, FIG. 3.

244. If Patent Owner argues that Karlsson does not disclose producing and storing coordinates with its images, it would have been obvious to a POSA to modify Karlsson's system to include the coordinates of the pixels, and the corresponding vehicle recognition process as taught by Nakamura. This would have expressly provided the algorithm details that are already implicit in Karlsson's system, therefore allowing the coordinates of the traffic ahead to be determined based on the video sensor data. This modification only involves basic programming changes, and no changes to Karlsson's physical components.

A. A POSA would have been motivated to combine Karlsson and Nakamura with a reasonable expectation of success.

245. Karlsson and Nakamura are from the same technical field—adaptive vehicle headlight systems. EX1010, 1:3-7, 3:7-16; EX1013, ¶¶1, 7-9. Karlsson's adaptive headlight system detects oncoming traffic and dims a portion of the headlight beam to prevent glare. EX1010, Abstract, 2:30-35, 9:18-26. Karlsson's techniques and system of controlling individual spotlight beams emphasize safety of all drivers. EX1010, 1:16-26, 4:17-21, 9:18-26. Controllable headlamps "significantly increase the driving comfort and the road safety," and "glaring and blinding of oncoming traffic [is] effectively prevented," increasing safety. EX1010, 9:18-26. Karlsson enables "higher light

intensity," for example "when driving on dark, unilluminated roads," while protecting others from glare. EX1010, 1:21-26, 1:10-13.

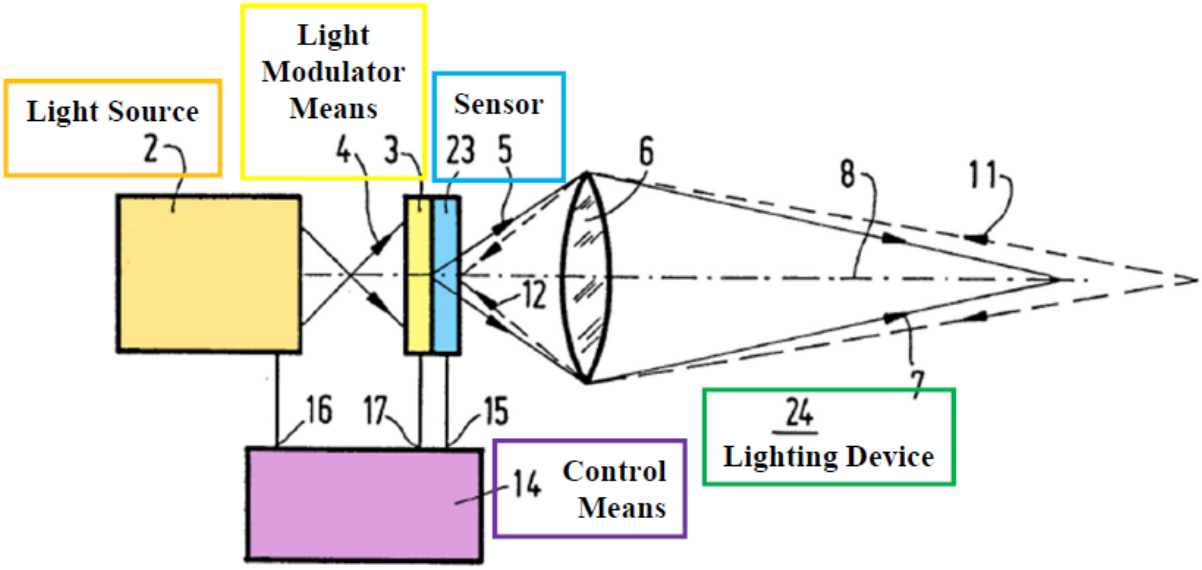

EX1010, FIG. 3 (annotated).

246. Karlsson's "sensors 9 and 23 are preferably designed to be capable of *precisely determining the direction* and intensity of the detected light 11." EX1010, 12:19-22. "[T]he electric signal fed to the input 15 of the control means 14 by the light-sensitive sensor 9 is processed by the control means 14 into output signals…to control the lighting means." EX1010, 9:13-17. Thus, Karlsson discloses receiving an image and processing that to determine which area of the image contains a vehicle to control the headlights. In my opinion, a POSA would have understood that this processing and storage involves the use of coordinate-specific information, and produces coordinates that correspond to the direction of the detected light sources. However, Karlsson does not

explicitly specify how the detected target images are stored and processed to determine which LEDs to be dimmed to avoid glare.

247. This would have led a POSA to search for known techniques detailing how sensor information, like the images recorded in Karlsson, are stored and processed to determine which portions of the headlight beam need to be dimmed for glare reduction. For example, Nakamura discloses an automatic headlight system detects vehicles by processing an "image 120 that is [the] image that was obtained by camera 22." EX1013, ¶36. "Each pixel of the image that is formed by the image signal identifies a position based on the *coordinates* (X_n, Y_n)." EX1013¸ ¶25. Nakamura discloses a multi-step algorithm by which the pixels are processed to determine: (1) the boundaries of the roadway, and (2) the location of a vehicle in the roadway. EX1013, ¶¶36-47. Thus, Nakamura discloses that the pixels are each associated with a coordinate system (here, an X,Y system) to plot the location of the other traffic.

248. If Patent Owner argues that Karlsson does not disclose producing and storing coordinates with its images, it would have been obvious to a POSA to modify Karlsson's system to include the coordinates of the pixels, and the corresponding vehicle recognition process as taught by Nakamura. This would have expressly provided the algorithm details that are already implicit in Karlsson's system, therefore allowing the coordinates of the traffic ahead to be

determined based on the video sensor data. This modification only involves basic programming changes, and no changes to Karlsson's physical components.

249. Karlsson teaches that "means for automatically adjusting the pattern of the light beam" use "sensors…[that] *precisely determin[e] the direction* and intensity of the detected light 11." EX1010, 6:34-7:1, 12:19-22. That direction is a spatial location because the distance to the target is only important insofar as it affects the area to be dimmed. "[T]he pattern and the intensity of the light beam 7 are…controlled in such a manner that no light at all or light having a low intensity is emitted in those *directions from which light is detected*." EX1010; 9:18-22. Thus, Karlsson's system relies on the location of the detected sources to determine the proper light sources to attenuate to prevent glare.

250. Nakamura's algorithm uses coordinates to quantify the spatial locations of detected headlight targets in a system that is functionally similar to Karlsson's. Like Karlsson, Nakamura's camera detects lights from other vehicles' headlamps and tail lamps, and processes the resulting image to determine their location using X,Y pixel coordinates. EX1013, ¶¶36-47; EX1010, 2:30-35, 9:18-26, 13:24-14:4, FIG. 3. Thus, a POSA would have applied Nakamura's teachings to implement what is implicit in Karlsson.

251. This modification would also have been a simple combination of known elements in the prior art: Karlsson's system and Nakamura's coordinate-based pixel mapping. The combination would have had the predictable result of providing the algorithm details implicit in Karlsson's system through Nakamura's known technique of mapping pixels in an image using coordinates because the modification allows each pixel to be identified by location. This modification would also have been the use of a known technique (Nakamura's coordinate teachings) to improve a similar system (Karlsson's headlight system). This would further ensure Karlsson's system accurately identifies traffic ahead and dims its headlights appropriately, improving illumination quality and safety for drivers. A POSA would have had a reasonable expectation of success performing this modification. A POSA would have understood *how* to combine the teachings of Karlsson and Nakamura, for example, by simply modifying software instructions stored in memory of Karlsson's controller/processor (e.g., ECU) to include the pixel coordinates and corresponding algorithm in Nakamura. This modification involves no physical changes, and only basic programming changes, which would have been well within a POSA's skill. Furthermore, both Karlsson and Nakamura use the same overall sensor system architecture—a camera connected with processing circuitry and memory—and Nakamura explains how to implement the

coordinate mapping of the pixels received by a camera. EX1010, 11:7-36; EX1013, ¶¶25-27, 36-44. This would have provided a POSA with an easily applicable example (from Nakamura) to be implemented on a structurally similar system (Karlsson).

B. Independent Claim Structural Elements

1. [56.P]/[64.P]/[72.P]/[80.P] "An illuminating device having automatic control of light provided to an illuminated area comprising"

252. Karlsson discloses "*a lighting device*, in particular a headlight of a motor vehicle, wherein the *pattern of the emitted light beam* is varied automatically in an efficient manner." EX1010, 2:30-35. Karlsson's "lighting device 24" is "for producing the desired light beam 7." EX1010, 11:7-10, FIG. 3.

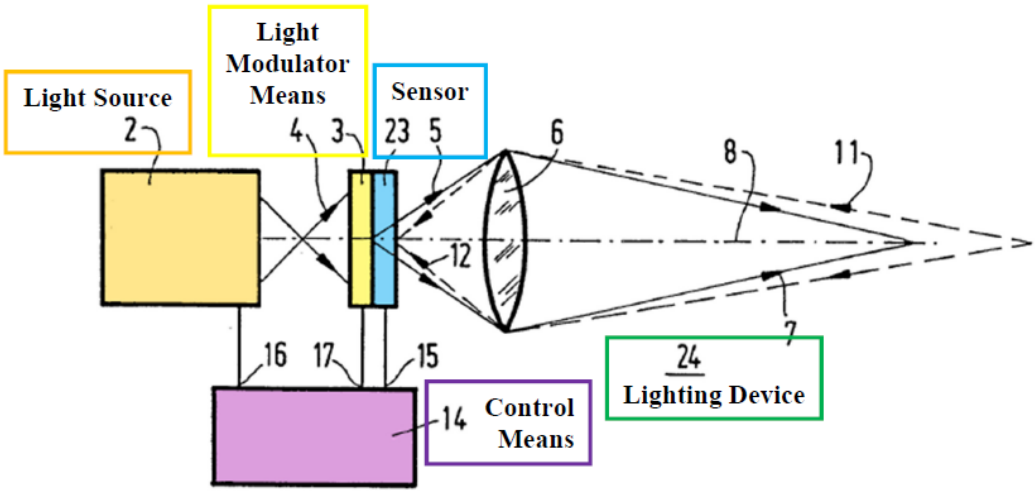

EX1010, FIG. 3 (annotated).

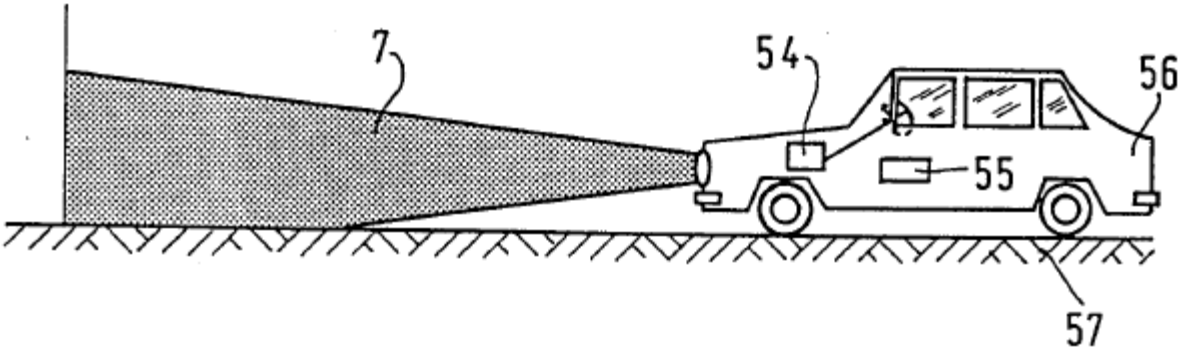

EX1010, FIG. 16.

253. In view the above, Karlsson discloses these elements.

2. [56.1]/[64.1]/[72.1]/[80.1] "a structure for incorporating illuminating device elements, wherein the structure comprises a motor vehicle"

254. Karlsson discloses "a…*headlight of a motor vehicle*." EX1010, 2:30-32, FIG. 16, 11:29-32, 20:16-32.

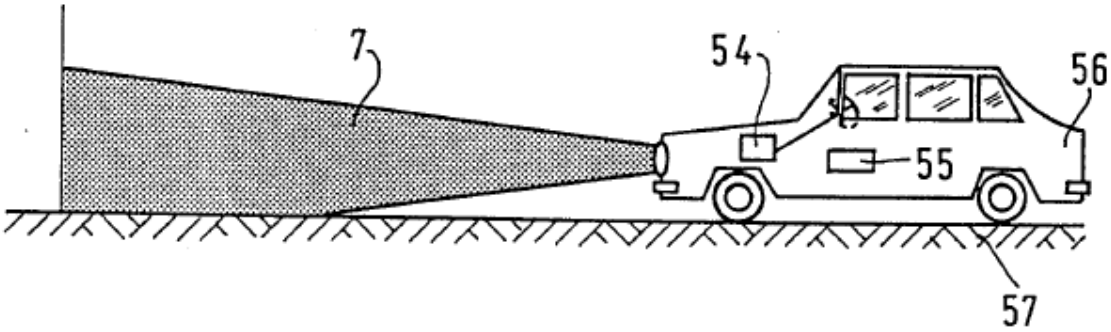

EX1010, FIG. 16.

255. In view the above, Karlsson discloses these elements.

3. [56.2]/[64.2]/[72.2]/[80.2] "a plurality of individually controllable LEDs incorporated in the structure via at least one headlamp mounted to the structure, each headlamp including at least one of the LEDs, the LEDs in communication with a power source"

256. Karlsson focuses on "headlights of a car" that include "a plurality of controllable spotlight beams…*for example, a light beam from [a] LED*." EX1010, 11:29-32, 13:24-29. To the extent that this embodiment differs from other embodiments in Karlsson, it would have been obvious to use LEDs as individually-controlled light sources because light patterns using LEDs "can be simply effected by switching one or more of the spotlight beams 34 [the LEDs] on and/or off, or by adapting the intensity" of the LEDs. EX1010, 13:33-36.

257. Karlsson states "[f]or the sake of clarity, the *electric energy source or the power supply source* for the light source 2…are not shown." EX1010, 8:35-9:2. Thus, a POSA would have understood that Karlsson's headlamps, including its LEDs, are connected to a power supply.

258. In view the above, Karlsson discloses these elements.

4. [56.3]/[64.3]/[72.3]/[80.3] "electronic circuitry apparatus for the controlled powering of the LEDs and other of the illuminating device elements"

259. Karlsson's "*control means 14* are arranged to selectively switch the individual small light sources, or a group of individual small light sources, on and off, or to selectively adjust the light intensity of a respective spotlight beam 34…so as to provide a desired lighting pattern." EX1010, 14:22-30. Karlsson

includes "an *electrical connection* between the [the LEDs]…which, for example, may consist of *transistors or the like*." EX1010, 19:36-20:5. A POSA would have understood these electric circuitry components (e.g., transistors) are for controlled powering of the LEDs because of their known functions and arrangement. Because this circuitry is part of the controller (control means 14), it meets both the plain meaning and any potential means-plus-function structure for this term.

260. Regarding the feature that the electronic control circuitry control powers the claimed "other of the illuminating device elements," Karlsson's electronic circuity includes "control electronics 41" integrated into a combined "printed circuit board." EX1010, 20:1-20:10. A POSA would have understood, or found obvious, that control electronics 41 would control the powering of at least the sensors because they are intended to control operation of these components.

261. In view the above, Karlsson discloses these elements.

5. [56.4]/[64.4]/[72.4]/[80.4] "one or more processors"

262. Karlsson's system includes "*processor-controlled control means 14*." EX1010, 20:12-15, FIG. 15. And, "[t]he control means may likewise be built up of various components, *such as a microprocessor*, a microcontroller,

programmable logic circuits, or of discrete logic components." EX1010, 21:36-22:3.

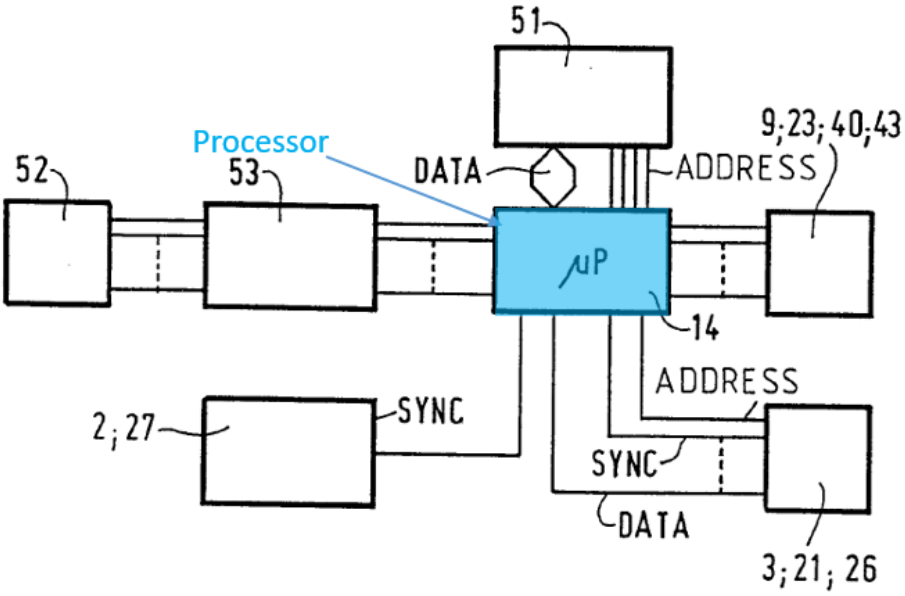

FIG. 15

EX1010, FIG. 15 (annotated).

263. In view the above, Karlsson discloses these elements.

6. [56.5]/[64.5]/[72.5]/[80.5] "one or more sensors, including one or more cameras, placed on the structure for detecting coordinate-specific information about the illuminated area, at least one of said cameras in communication with power, and in communication with at least one of the one or more processors"

(a) Karlsson discloses this element.

264. Karlsson discloses "the *light-sensitive sensors* 9 and 23 are preferably designed to be capable of precisely determining the direction and the intensity of the detected light 11…in the case of a light-sensitive sensor 23, a

photo-sensitive plate as used in *modern video cameras* [can be used]." EX1010, 12:19-24. Karlsson discloses that a power source powers "the light-sensitive sensor 9." EX1010, 8:37-9:1. A POSA would have understood that, like sensor 9, sensor 23 is connected to the power source to enable Karlsson's system to receive sensor data. A POSA also would have understood (or found obvious) that sensor 23 is connected to the power source in view of the disclosure regarding sensor 9 at least to fully implement Karlsson's system. Karlsson also discloses that "control means 14 are arranged to selectively switch the individual small light sources, or a group of individual small light sources, on and off…in *response to a control signal from sensor means 23*." EX1010, 14:22-30. Thus, Karlsson's control means 14, which includes the processor, is in communication with sensor 23 to receive the control signal.

265. Karlsson's "sensors 9 and 23 are preferably designed to be capable of *precisely determining the direction* and intensity of the detected light 11," which is a spatial location of the detected light. EX1010, 12:19-22. "[T]he pattern and the intensity of the light beam 7 are…controlled in such a manner that no light at all or light having a low intensity is emitted in those *directions from which light is detected*." EX1010, 9:18-22. A POSA would have therefore understood that images received by the camera, and the direction data associated

with them, is "coordinate-specific information about the illuminated area" as claimed because the "spatial location" is stored in a format (as coordinates).

(b) Nakamura discloses this element.

266. Nakamura discloses an automatic headlight system detects vehicles by processing an "image 120 that is [the] image that was obtained by camera 22." EX1013, ¶36. "Each pixel of the image that is formed by the image signal identifies a position based on the coordinates (Xn, Yn)." EX1013¸ ¶25. Nakamura discloses a multi-step algorithm by which the pixels are processed to determine: (1) the boundaries of the roadway, and (2) the location of a vehicle in the roadway. EX1013, ¶¶36-47. And the camera is in communication with power, "[S]ensor 66, and camera 22 via image processing apparatus 48 are connected to input port 58… signal will be outputted from control terminal". EX1013, ¶23-24. Thus, Nakamura discloses that the pixels are each associated with a coordinate system (here, an X,Y system) to plot the location of the other traffic, and camera is in communication with power.

267. In view the above, Nakamura disclose these elements.

(c) It would have been obvious to modify Karlsson in view of Nakamura with a reasonable expectation of success.

268. Alternatively, it would have been obvious to a POSA to modify Karlsson's system to map the image with coordinates, as taught by Nakamura, to provide the algorithmic detail implicit in Karlsson. Section XII.A; EX1013,

¶¶36-47. Thus, Karlsson's camera would produce the claimed "coordinate-specific information" as modified by Nakamura.

269. In view the above, the combination of Karlsson and Nakamura discloses these elements.

7. [56.6]/[64.6]/[72.6]/[80.6] "a controller, including at least one of the one or more processors, integrated with the structure via mounting, in communication with the controlling power electronic circuitry apparatus, said controller arranged to process the information communicated from the cameras and to automatically control the light provided to the illuminated area"

270. In Karlsson "*control means 14* are arranged to selectively switch the individual small light sources, or a group of individual small light sources, on and off… in response to a control signal from *sensor means 23*, so as to provide a desired lighting pattern." EX1010, 14:22-30. Further, "[t]he desired pattern and intensity of the light beam 7 are determined on the basis of the light 11 that is detected by the light sensitive sensor" by control means 14. EX1010; 9:6-8. Thus, the processor in control means 14 is processing the information (data base on detected light 11) from the cameras in Karlsson. A POSA would have understood that control means 14, which includes a processor, is "in communication with" the electronic control circuitry discussed above, because otherwise the processor cannot command the electrical circuitry to power on/off or dim the desired LEDs as Karlsson discloses. Sections XI.B.4, XI.B.5.

Karlsson also discloses that its system is "arranged for *automatically* forming a lighting pattern." EX1010, 20:6-10.

271. In view the above, Karlsson discloses these elements.

8. [56.7]/[64.7]/[72.7]/[80.7] "memory storing instructions that, when executed by one or more processors of the controller, enable the controller to:"

272. Karlsson discloses "Figure 15 is based on processor-controlled control means 14 comprising data, address, synchronisation and signaling links, [and] *memory means 51*." EX1010, 20:12-15. Further, "*non-volatile memor*y *51* [of the] type PROM, EPROM or EEPROM may be used for storing and recording the various adjustments." EX1010, 22:3-4. A POSA would have understood that the steps taken by the processor discussed above in [24.6] are "instructions" because they govern operation of the processor. Further, a POSA would have understood that these instructions must be stored for access by the processor in memory 51 because otherwise the processor (and control means 14) would not be able to access the instructions for operation.

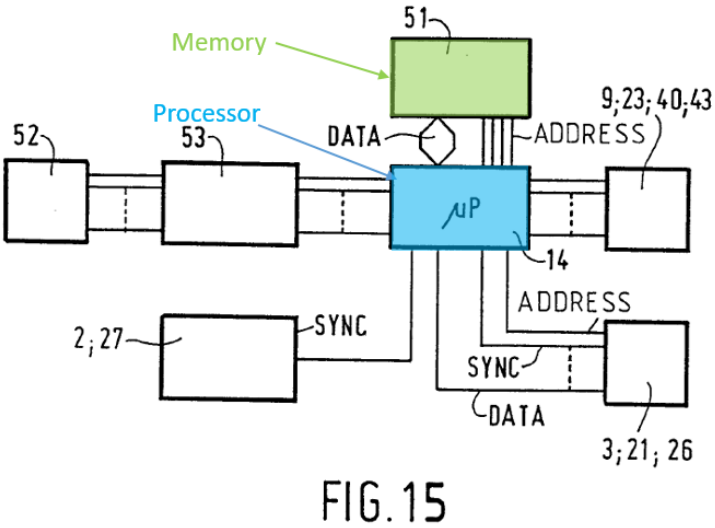

EX1010, FIG. 15 (annotated).

273. In view the above, Karlsson discloses these elements.

C. Independent Claim 56 instructions

1. [56.8] "determine, based on data from one or more of the sensors, a vertical and horizontal position associated with the at least one other vehicle;"

274. Karlsson's "light-sensitive sensor…*detects* the distribution and the intensity of light in the *area ahead of a vehicle*" for "*detecting* light from *oncoming traffic*." EX1010, 2:2-4, Abstract, FIGS. 3, 14, 3:17-21 ("*light of oncoming traffic*"), 12:19-24 ("precisely determining the *direction* and the *intensity* of the *detected light 11*"), 5:16-32, 3:27-31. This information is processed to determine the location of the target vehicle, allowing the appropriate LEDs to be controlled. EX1010, 2:2-4, Abstract, FIGS. 3, 14, 3:18-21 ("*light of oncoming traffic*"), 12:19-24 ("precisely determining the *direction*

and the *intensity* of the *detected light 11*"), 5:16-32, 3:27-31. A POSA would have therefore understood that Karlsson at least implicitly discloses determining vertical and horizontal positions (i.e., coordinates) because the calculated vehicle locations are recorded in some format.

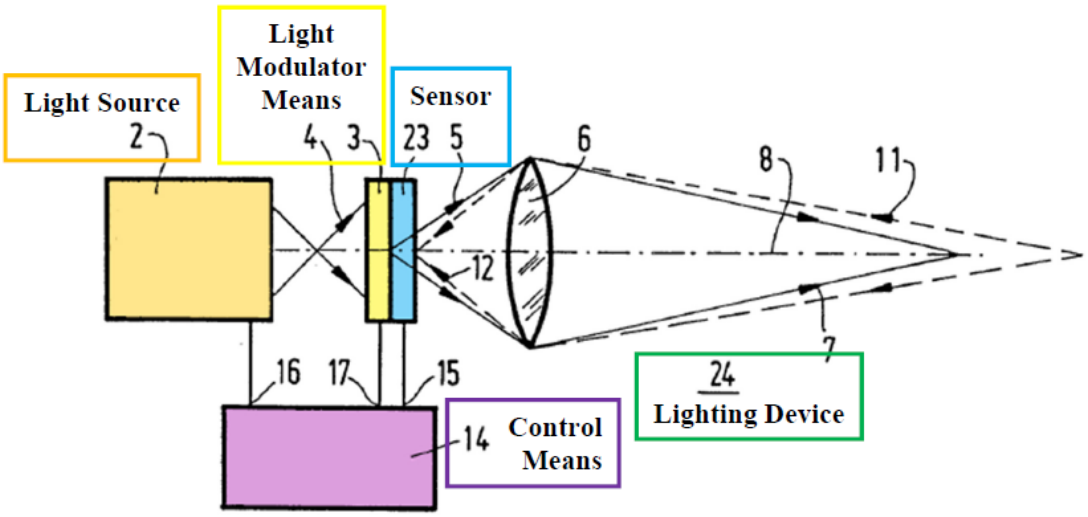

EX1010, FIG. 3 (annotated).

275. Nakamura also discloses determining coordinates. Nakamura discloses an automatic headlight system detects vehicles by processing an "image 120 that is [the] image that was obtained by camera 22." EX1013, ¶36. "Each pixel of the image that is formed by the image signal identifies a position based on the coordinates (Xn, Yn)." EX1013¸ ¶25. Nakamura discloses a multi-step algorithm by which the pixels are processed to determine: (1) the boundaries of the roadway, and (2) the location of a vehicle in the roadway. EX1013, ¶¶36-47. Thus, Nakamura discloses that the pixels are each associated with a coordinate system (here, an X,Y system) to plot the location of the other

traffic. This X, Y coordinate system discloses horizontal (X) and vertical (Y) positions.

276. As discussed above, it would have been obvious to modify Karlsson's system to include coordinates associated with the detected image, as taught by Nakamura. Section XI.A; EX1013, ¶25. The modified system would determine which portions of the sensed image correspond to the vehicle, and record those coordinates, as taught by Nakamura. EX1013, ¶¶25, 36-44.

277. In view the above, the combination of Karlsson and Nakamura discloses this element.

2. [56.9] "select a first cluster of the LEDs based at least in part on at least one of the vertical and horizontal position compared to known aimings of light associated with the first cluster; and"

278. Karlsson's "light beam 7… [is] controlled in such a manner that *no light at all* or *light having a low intensity* is emitted in those directions from which light is detected…[thus] *glaring or blinding of oncoming traffic* is effectively *prevented*." EX1010, 9:18-26, FIGS. 3, 14, 15. Further, the "*part of the light beam* which might cause *inconvenience to oncoming traffic* is automatically *suppressed*." EX1010, 2:7-9. "[L]ight source 2 [] is composed of a grid of separate light sources, such as *LEDs*, which can preferably be controlled either individually or in *groups*." EX1010, 14:1-4, 14:26-30. Thus, Karlsson discloses selecting a group, or cluster, of LEDs that emits the part of the light

beam that creates glare to reduce blinding. As Karlsson discloses this cluster or group may consist of a single LED, or multiple LEDs. EX1010, 14:1-4, 14:26-30. As I discuss above in Section XII.B.6, Nakamura discloses the use of coordinates associated with the detected traffic: "Each pixel of the image that is formed by the image signal identifies a position based on the coordinates (X_n, Y_n)." EX1013¸ ¶25. Karlsson's LEDs are "controlled in such a manner that no light at all or light having a low intensity is emitted in those *directions* from which light is detected." EX1010, 9:18-21. This teaches the claimed "known aimings of the first light" because the known aiming is the direction of the dimmed area that corresponds to the target vehicle. Thus, Karlsson selects a cluster of LEDs that correspond to the direction (the claimed "known aimings") of the target vehicle.

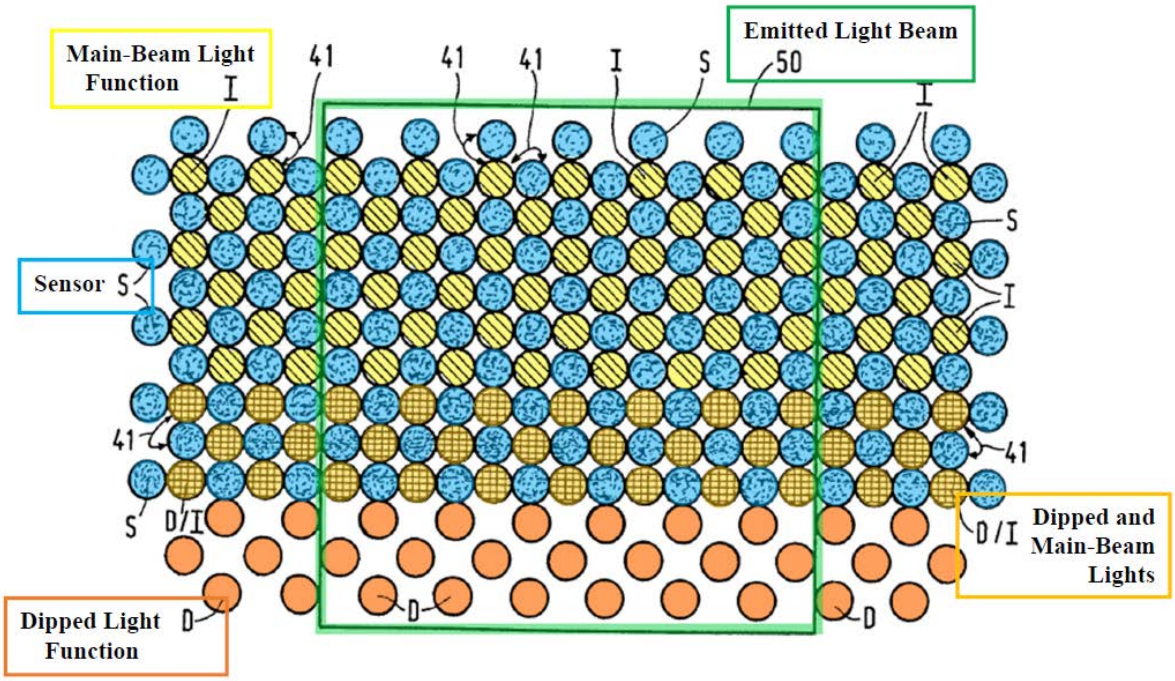

EX1010, FIG. 14 (annotated).

279. In view the above, the combination of Karlsson and Nakamura discloses this element.

3. [56.10] "reduce intensity of illumination to non-glaring illumination of a first area associated with the at least one other vehicle, relative intensity of illumination on both sides of the first area at elevations common with the first area illuminated by a second cluster of the LEDs, by control of emission from the first cluster."

280. Karlsson's "light beam 7…[is] controlled in such a manner that *no light at all* or *light having a low intensity* is emitted in those directions from which light is detected…[thus] *glaring or blinding of oncoming traffic* is effectively *prevented*." EX1010, 9:18-26, FIGS. 3, 14, 15. The remaining areas of light beam 7 are left at full intensity ("main-beam" or "high beam" in Karlsson's terms), "permitting a light intensity which is generally *higher than that of conventional dipped headlights*." EX1010, 1:21-24, Abstract, FIGS. 3, 14, 15, 2:7-9 ("*part of the light beam*…is automatically suppressed, whilst *retaining an optimum lighting* effect for the driver").

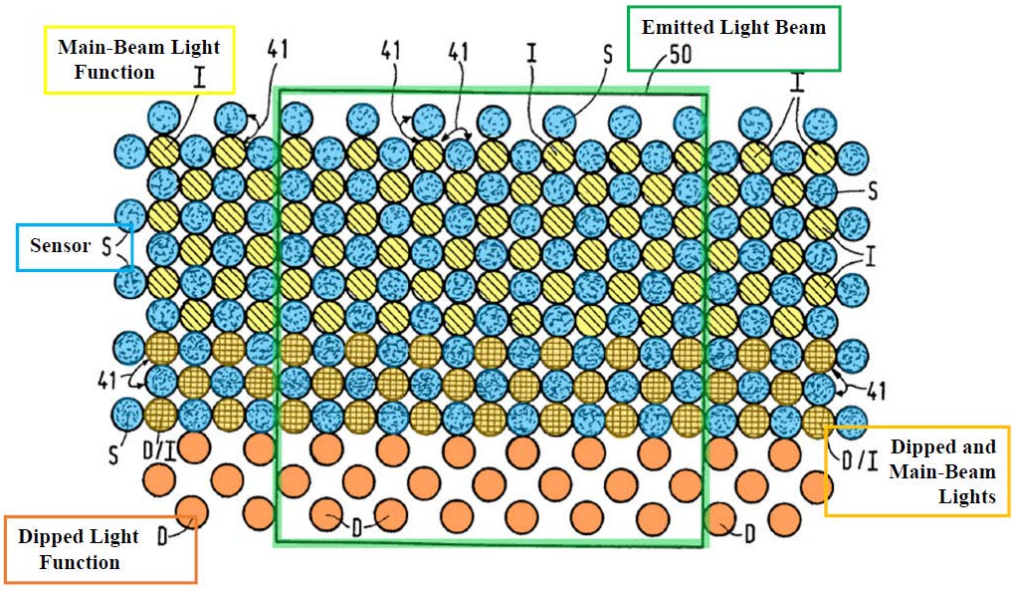

EX1010, FIG. 14 (annotated).

281. A POSA would also have understood that positioning the main beam (full intensity) LEDs all around the reduced illumination area provides the "optimum lighting effect" for the driver because doing so maximizes the area that is fully illuminated. EX1010, 2:7-9. In the alternative, it would have been obvious to a POSA to configure Karlsson's system to surround the reduced illumination area with full illumination to the greatest extent possible for the same reason. This would result in the high intensity and low intensity light being at a common elevation, as claimed.

282. In view the above, Karlsson discloses this element.

D. Claim 57 "The illuminating device of claim 56, wherein: the data includes image data; the control of emission of the first cluster includes a change of at least one of color or intensity or control of at least one LED of the first cluster into a nonemitting state; at least one of the first cluster second cluster includes a plurality of the LEDs and at least one of the first cluster or the second cluster includes non-contiguous LEDs; and the known light aimings associated with the first cluster is based at least on art on known directionality of light emitted by LEDs of the first cluster exiting from the at least one headlamp."

283. Karlsson's sensor is a camera and produces image data. EX1010, 12:19-24. Regarding the controlled emission element, Karlsson discloses that "light beam 7…[is] controlled in such a manner that *no light at all* or *light having a low intensity* is emitted in those directions from which light is detected." EX1010, 9:18-26, FIGS. 3, 14, 15. Thus, Karlsson discloses a change in emission that includes a change in intensity.

284. Regarding the non-contiguous element, Karlsson's cluster can be selected "for forming random patterns of the light beam" to "provide a desired lighting pattern." EX1010, 13:24-29, 14:26-32. A POSA would have understood that Karlsson's system would automatically function to detect and reduce illumination on any number of targets vehicles. This is especially the case because Karlsson references protecting "traffic" from glare, which a POSA would have understood includes multiple vehicles because of the general volume of vehicles present on the roadways in the relevant timeframe. EX1010, 9:18-26. When there are two or more separated vehicle targets, as would be the

case in most situations with multiple other vehicles present, Karlsson's system would select two areas of non-contiguous LEDs to form the dimmed cluster of LEDs that to cover all of the vehicle targets.

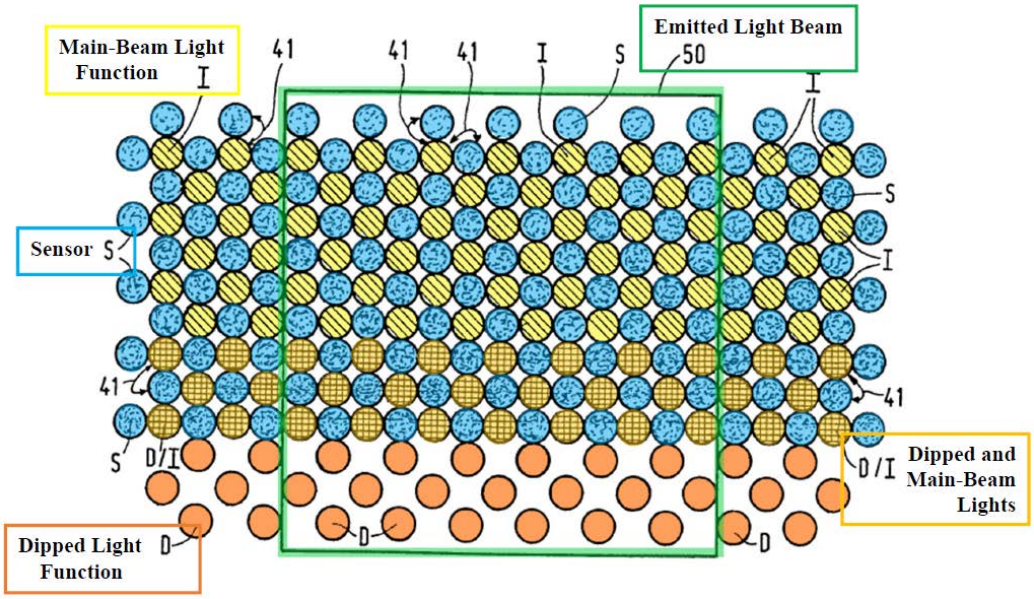

EX1010, FIG. 14 (annotated).

285. In my opinion, a POSA would have understood that Karlsson addresses, or at least suggests, detecting multiple vehicles, and therefore would select non-contiguous LEDs to address multiple, spaced-apart vehicles. However, to the extent that Karlsson does not do so, Nakamura discloses that it was known to detect multiple "*vehicles* (proceeding and oncoming vehicles)" and adjust the headlights to "not expose other *vehicles* to glare." EX1013, ¶¶35, 45. To the extent that Karlsson does not disclose detecting and adjusting light based on multiple vehicles, it would have been obvious to modify Karlsson's programming in view of Nakamura to do so because this would improve safety

and system performance in the likely event of multiple other vehicles being present. This means that Karlsson's modified system would have selected non-contiguous LEDs to address multiple, spaced-apart vehicles.

286. Regarding the known aimings element, Karlsson's LEDs are "controlled in such a manner that no light at all or light having a low intensity is emitted in those *directions* from which light is detected." EX1010, 9:18-22. This teaches the claimed "known aimings of the first light" because the known aiming is the direction of the dimmed area that corresponds to the target vehicle. Thus, Karlsson selects a cluster of LEDs that correspond to the direction (the claimed "known aimings") of the target vehicle.

287. In view the above, Karlsson and Nakamura disclose or render obvious this claim.

E. Claims 62/70/78/86 "The illuminating device of claim 56, further including one or more optical control elements to control light emitted from one or more of the LEDs."

288. Light from Karlsson's LEDs passes through a "lens 6", which is an optical control element. EX1010, 11:10-11, FIG. 3. Karlsson also discloses optical control elements including light modulator means "which may be of a type which transmits light or of a type which reflects light, are switched in such a manner during operation that the desired beam pattern is obtained. Light

modulator means … Suspended Particle Devices (SPDs) … Liquid Crystal Devices (LCDs), Micro Mirrors, Quantum Wells and the like." EX1010, 5:7-15.

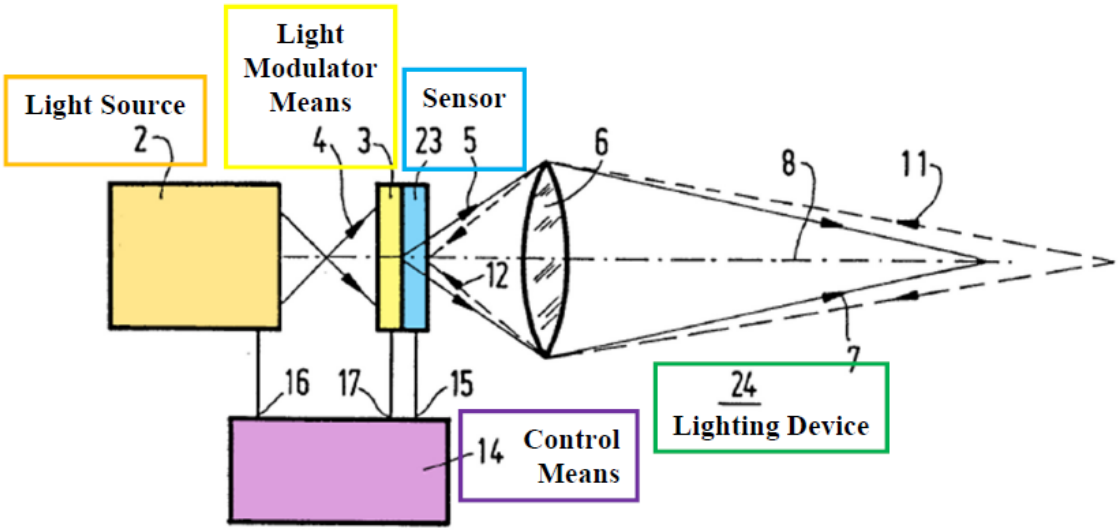

EX1010, FIG. 3 (annotated).

289. In view the above, Karlsson discloses these claims.

F. Claims 63/71/79/87 "The illuminating device of claim 62, wherein the optical control elements include at least one of one or more reflectors, refractors or lenses."

290. Light from Karlsson's LEDs passes through a "lens 6". EX1010, 11:10-11, FIG. 3.

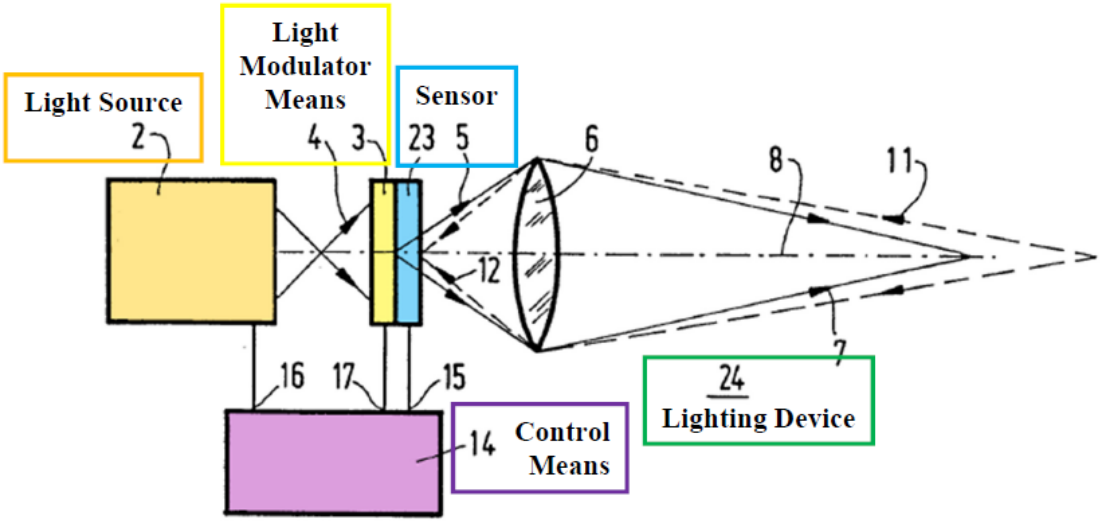

EX1010, FIG. 3 (annotated).

291. In view the above, Karlsson discloses these claims.

G. Independent Claim 64 instructions

1. [64.8] "select a first cluster of the LEDs having light associated there that is directed towards the other vehicle based at least in part on first data from one or more of the sensors indicating a first position associated with the other vehicle;"

292. [64.8] is patentably indistinct from elements [56.8] and [56.9], and is disclosed by Beam for the same reasons. Sections XII.C.1-2. The coordinates discussed in [56.8] and [56.9] from the sensors are "data from one or more of the sensors indicating a first position" of the target vehicle as claimed because vehicle coordinates show the position of the vehicle.

293. Karlsson's "light-sensitive sensor…*detects* the distribution and the intensity of light in the *area ahead of a vehicle*" for "*detecting* light from *oncoming traffic*." EX1010, 2:2-4, Abstract, FIGS. 3, 14, 3:17-31 ("*light of*

oncoming traffic"), 12:19-24 ("precisely determining the *direction* and the *intensity* of the *detected light 11*"), 5:16-32. This information is processed to determine the location of the target vehicle, allowing the appropriate LEDs to be controlled. EX1010, 2:2-4, Abstract, FIGS. 3, 14, 3:18-31 ("*light of oncoming traffic*"), 12:19-24 ("precisely determining the *direction* and the *intensity* of the *detected light 11*"), 5:16-32.

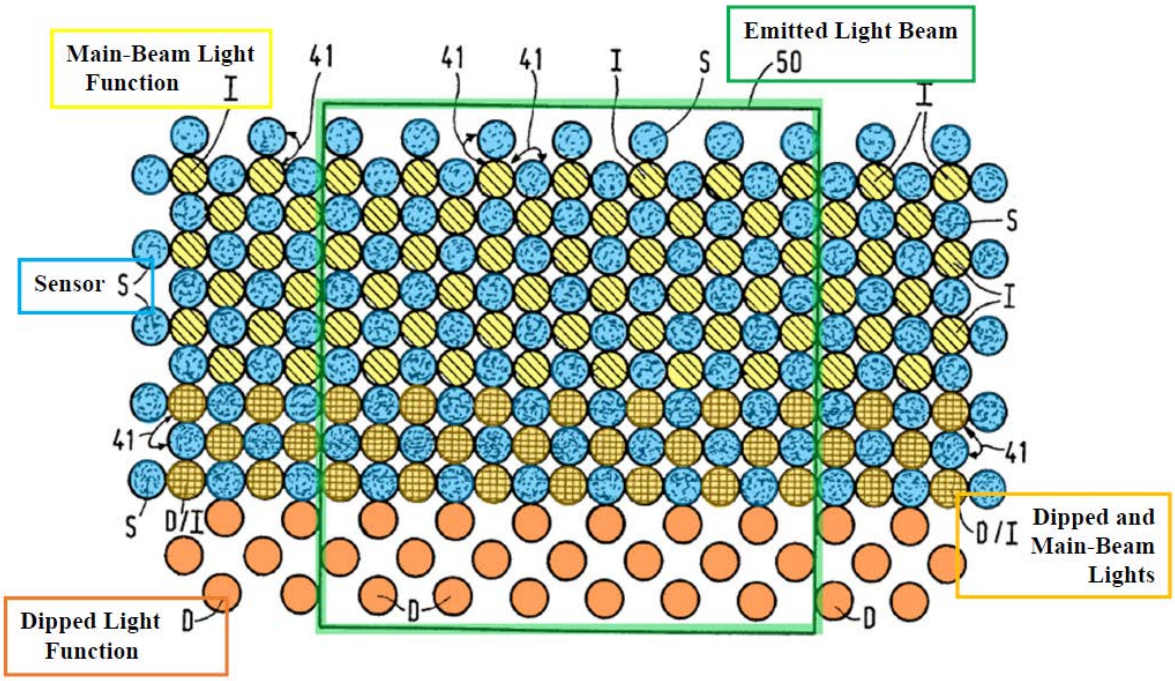

EX1010, FIG. 14 (annotated).

294. In view the above, Karlsson discloses this element.

2. [64.9] "control a first change to one or more characteristics of the light associated with the first cluster of the LEDs that is directed towards the other vehicle, that diminishes glare to a driver of the other vehicle when the other vehicle is at the first position;"

295. Element [64.9] is patentably indistinct from element [56.10], and is disclosed by Karlsson for the same reasons. Sections XII.C.3. The reduced intensity is a "characteristic" of the LEDs as claimed.

296. 310. Karlsson's "light beam 7… [is] *controlled* in such a manner that no light at all or light having a low intensity is emitted in those directions from which light is detected…[thus] *glaring or blinding of oncoming traffic is effectively prevented*." EX1010, 9:18-26, FIGS. 3, 14, 15. Further, the "part of the light beam which might cause inconvenience to oncoming traffic is automatically suppressed." EX1010, 2:7-9.

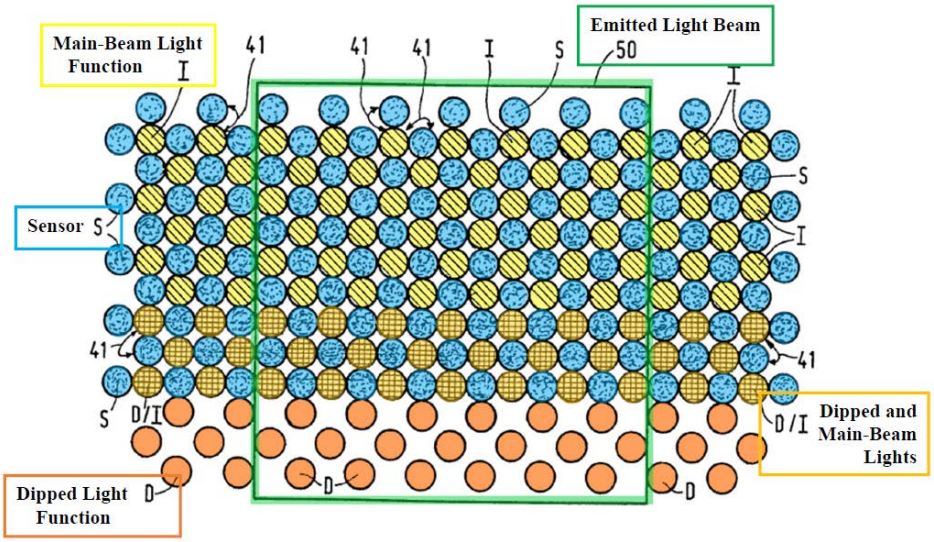

EX1010, FIG. 14 (annotated).

297. In view the above, Karlsson discloses this element.

3. [64.10] "select a second, different cluster of the LEDs having light associated therewith that is directed towards the other vehicle based at least in part on second, subsequent data from one or more of the sensors indicating a second, subsequent position associated with the other vehicle; and."

298. Karlsson's system automatically functions to detect and reduce illumination on any number of target vehicles, including a second vehicle having a second position, in the same manner as the first vehicle. Indeed, Karlsson references protecting "traffic" from glare, which a POSA would have understood includes multiple vehicles because of the general volume of vehicles present on the roadways in the relevant timeframe. EX1010, 9:18-26.

299. In my opinion, a POSA would have understood that Karlsson addresses, or at least suggests, detecting multiple vehicles. However, to the extent that Karlsson does not do so, Nakamura discloses that it was known to detect multiple "*vehicles* (proceeding and oncoming *vehicles*)" and adjust the headlights to "not expose other *vehicles* to glare." EX1013, ¶¶35, 45. To the extent that Karlsson does not disclose detecting and adjust light based on multiple vehicles, it would have been obvious to modify Karlsson's programming in view of Nakamura to do so because this would improve safety and system performance in the likely event of multiple other vehicles being present.

300. Karlsson would perform the functions I discuss above in [64.8] and [64.9] to eliminate glare with as many vehicles as detected. Sections XIII.G.1-2. Thus, Karlsson would select a second cluster of LEDs aimed at the additional vehicle to avoid glare.

301. In view the above, Karlsson and Nakamura disclose or render obvious this element.

4. [64.11] "control a second, subsequent change, to one or more characteristics of the light that is subsequently directed towards the other vehicle, that diminishes glare to the driver of the other vehicle when the other vehicle is at the second position."

302. As I discuss in element [64.10], a POSA would have understood or found it obvious that Karlsson's system detects multiple vehicles. Section XIII.G.3. Further, Karlsson would perform the functions I discuss above in [64.8] and [64.9] to eliminate glare with as many vehicles as detected. Sections XIII.G.1-2. Thus, the second cluster would be controlled to diminish glare using the same process discussed in element [64.9]. Section XIII.G.2.

303. In view the above, Karlsson and Nakamura disclose or render obvious this element.

H. Claim 65 "The illuminating device of claim 64, wherein: the first data or second data includes image data; at least one of the first or second change to characteristics of light associated with at least one of the first or second cluster of LEDs includes at least one of a change to color, to intensity, or a change of at least one LED respective cluster to a non-emitting state; at least one of the first cluster or the second cluster includes a plurality of the LEDs and at least one of the first cluster or the second cluster includes non-contiguous LEDs; and the light that is directed or subsequently directed towards the other vehicle is determined based at least in part on known directionality of light emitted by the respective first or second cluster exiting the at least one headlamp."

304. Claim 65 is patentably indistinct from claim 57 and is disclosed by Karlsson accordingly. Section XII.D.

305. As discussed above, Karlsson's sensor is a camera and produces image data. EX1010, 12:19-24. Regarding the controlled emission element, Karlsson discloses that "light beam 7…[is] controlled in such a manner that *no light at all* or *light having a low intensity* is emitted in those directions from which light is detected." EX1010, 9:18-26, FIGS. 3, 14, 15. Thus, Karlsson discloses a change in emission that includes a change in intensity.

306. Regarding the non-contiguous element, Karlsson's cluster can be selected "for forming random patterns of the light beam" to "provide a desired lighting pattern." EX1010, 13:24-29, 14:26-32. A POSA would have understood that Karlsson's system would automatically function to detect and reduce illumination on any number of targets vehicles. This is especially the case because Karlsson references protecting "traffic" from glare, which a POSA

would have understood includes multiple vehicles because of the general volume of vehicles present on the roadways in the relevant timeframe. EX1010, 9:18-26. When there are two or more separated vehicle targets, as would be the case in most situations with multiple other vehicles present, Karlsson's system would select two areas of non-contiguous LEDs to form the dimmed cluster of LEDs that to cover all of the vehicle targets.

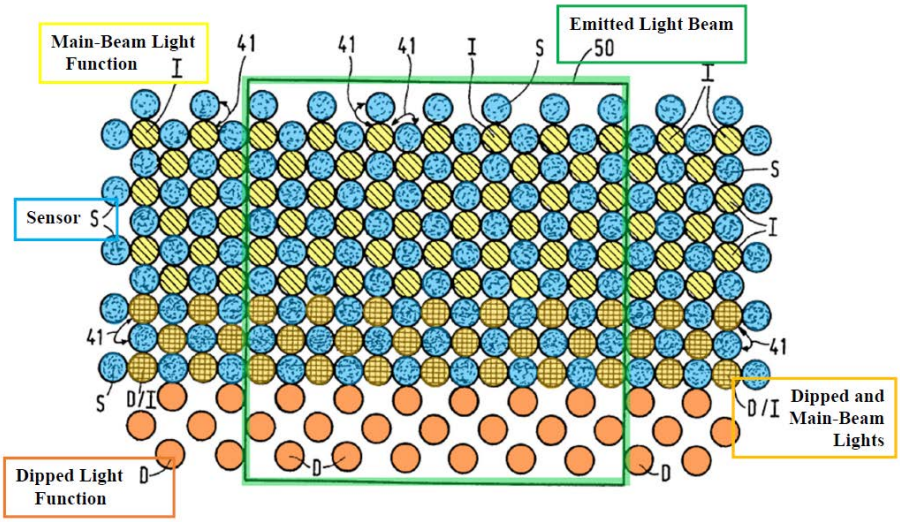

EX1010, FIG. 14 (annotated).

307. In my opinion, a POSA would have understood that Karlsson addresses, or at least suggests, detecting multiple vehicles, and therefore would select non-contiguous LEDs to address multiple, spaced-apart vehicles. However, to the extent that Karlsson does not do so, Nakamura discloses that it was known to detect multiple "*vehicles* (proceeding and oncoming vehicles)" and adjust the headlights to "not expose other *vehicles* to glare." EX1013, ¶¶35, 45. To the extent that Karlsson does not disclose detecting and adjusting light

based on multiple vehicles, it would have been obvious to modify Karlsson's programming in view of Nakamura to do so because this would improve safety and system performance in the likely event of multiple other vehicles being present. This means that Karlsson's modified system would have selected non-contiguous LEDs to address multiple, spaced-apart vehicles.

308. Regarding directionality element element, Karlsson's LEDs are "controlled in such a manner that no light at all or light having a low intensity is emitted in those *directions* from which light is detected." EX1010, 9:18-22. Thus, Karlsson selects a cluster of LEDs that correspond to the direction (the claimed "known aimings") of the target vehicle.

309. In view the above, Karlsson and Nakamura disclose or render obviou this claim.

I. Independent Claim 72 instructions

1. [72.8] "determine a target based on first data from one or more of the sensors;"

310. Claim element [72.8] is patentably indistinct from [56.8] and is taught by Karlsson for the reasons discussed above. Section XIII.C.1.

311. As I discuss above, Karlsson's "light-sensitive sensor…*detects* the distribution and the intensity of light in the *area ahead of a vehicle*" for "*detecting* light from *oncoming traffic*." EX1010, 2:2-4, Abstract, FIGS. 3, 14, 3:18-31 ("*light of oncoming traffic*"), 12:19-24 ("precisely determining the

direction and the *intensity* of the *detected light 11*"), 5:16-32. This information is processed to determine the location of the target vehicle, allowing the appropriate LEDs to be controlled. EX1010, 2:2-4, Abstract, FIGS. 3, 14, 3:18-31 ("*light of oncoming traffic*"), 12:19-24 ("precisely determining the *direction* and the *intensity* of the *detected light 11*"), 5:16-32.

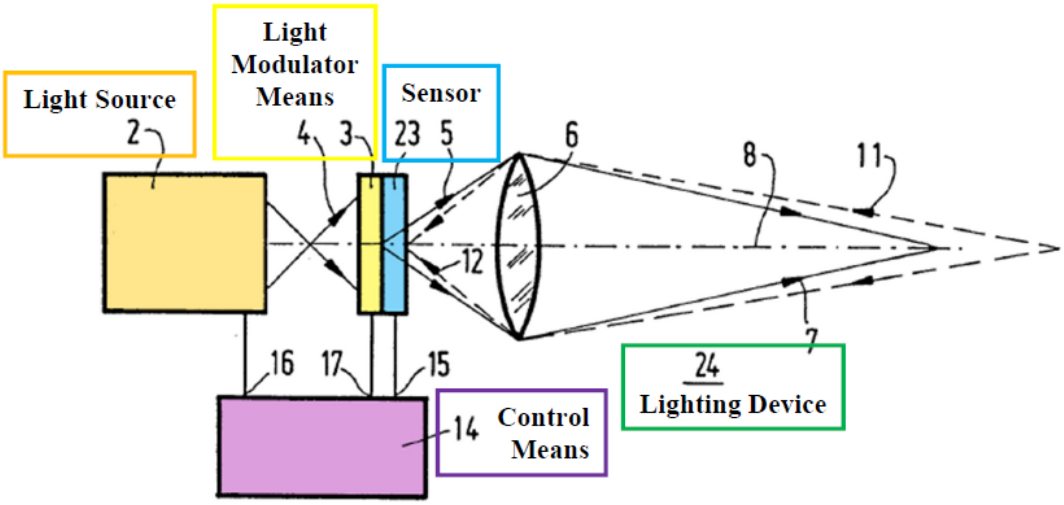

EX1010, FIG. 3 (annotated).

312. In view the above, Karlsson discloses this element.

2. [72.9] "determine a first target location based on the first data; from one or more of the LEDs"

313. Claim element [72.9] is patentably indistinct from portions of [52.8] and is disclosed by Karlsson for the same reasons. Section XII.C.1.

314. As I discuss above, Karlsson's "light-sensitive sensor…*detects* the distribution and the intensity of light in the *area ahead of a vehicle*" for "*detecting* light from *oncoming traffic*." EX1010, 2:2-4, Abstract, FIGS. 3, 14,

3:18-31 ("*light of oncoming traffic*"), 12:19-24 ("precisely determining the *direction* and the *intensity* of the *detected light 11*"), 5:16-32. This information is processed to determine the location of the target vehicle, allowing the appropriate LEDs to be controlled. EX1010, 2:2-4, Abstract, FIGS. 3, 14, 3:18-31 ("*light of oncoming traffic*"), 12:19-24 ("precisely determining the *direction* and the *intensity* of the *detected light 11*"), 5:16-32.

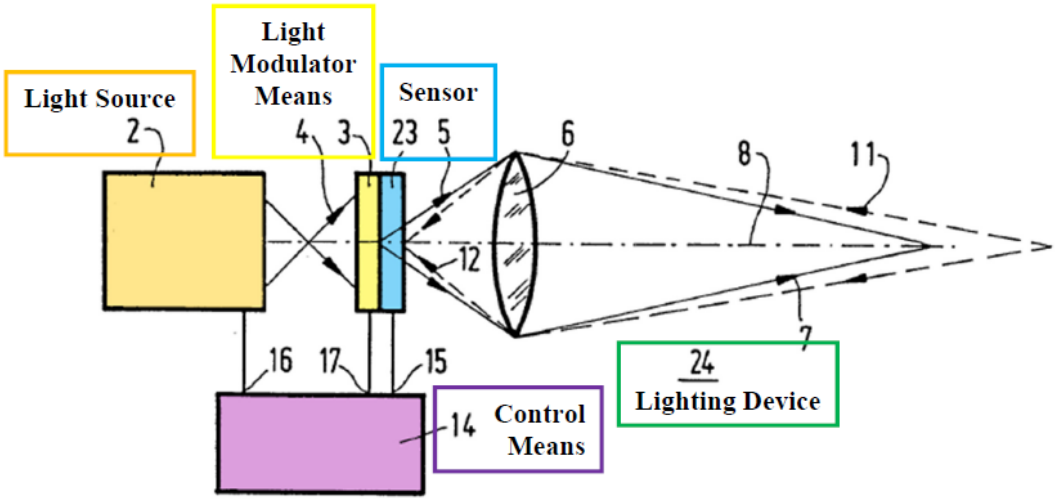

EX1010, FIG. 3 (annotated).

315. In view the above, Karlsson discloses this element.

3. [72.10] "select a cluster of the LEDs having light associated therewith that is directed at the target, determined based on the first target location;"

316. Claim element [72.10] is patentably indistinct from [56.9] and is taught by Karlsson for the reasons discussed above. Section XII.C.2.

317. Karlsson's "light beam 7… [is] controlled in such a manner that *no light at all* or *light having a low intensity* is emitted in those directions from

which light is detected…[thus] *glaring or blinding of oncoming traffic* is effectively *prevented*." EX1010, 9:19-26, FIGS. 3, 14, 15. Further, the "*part of the light beam* which might cause *inconvenience to oncoming traffic* is automatically *suppressed*." EX1010, 2:7-9. "[L]ight source 2 [] is composed of a grid of separate light sources, such as *LEDs*, which can preferably be controlled either individually or in *groups*." EX1010, 14:1-4, 14:26-30. Thus, Karlsson discloses selecting a group, or cluster, of LEDs that emits the part of the light beam that creates glare to reduce blinding. As Karlsson discloses this cluster or group may consist of a single LED, or multiple LEDs. EX1010, 14:1-4, 14:26-30.

318. In view the above, the Karlsson discloses this element.

4. [72.11] "vary illumination provided to the target by the selected cluster, relative to illumination provided to areas laterally adjacent to the target and provided by at least one LED different from LEDs in the selected cluster;

319. Claim element [72.11] is patentably indistinct from [56.10] and is taught by Karlsson for the reasons discussed above. Section XII.C.2. The reduced illumination intensity of [56.10] is a type of variation in illumination as recited in [72.11]. As discussed in [56.10] and shown below, this variation occurs with respect to the adjacent higher intensity illumination.

320. As I discussed above, Karlsson's "light beam 7…[is] controlled in such a manner that *no light at all* or *light having a low intensity* is emitted in

those directions from which light is detected…[thus] *glaring or blinding of oncoming traffic* is effectively *prevented*." EX1010, 9:18-26, FIGS. 3, 14, 15. The remaining areas of light beam 7 are left at full intensity ("main-beam" or "high beam" in Karlsson's terms), "permitting a light intensity which is generally *higher than that of conventional dipped headlights*." EX1010, 1:21-24, Abstract, FIGS. 3, 14, 15, 2:7-9 ("*part of the light beam*…is automatically suppressed, whilst *retaining an optimum lighting* effect for the driver").

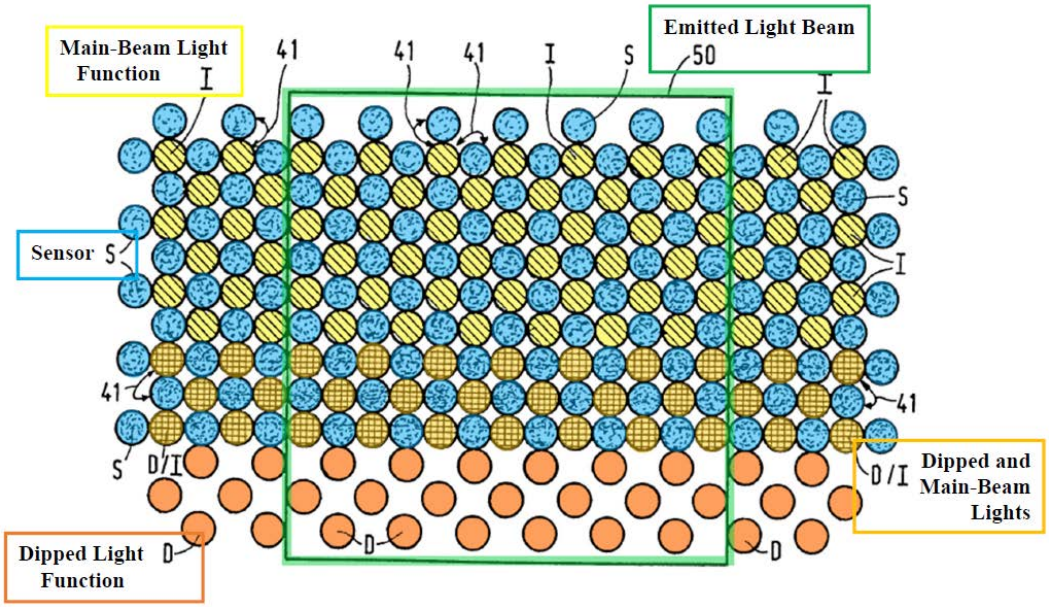

EX1010, FIG. 14 (annotated).

321. A POSA would also have understood that positioning the main beam (full intensity) LEDs all around the reduced illumination area, including laterally, provides the "optimum lighting effect" for the driver because doing so maximizes the area that is fully illuminated. EX1010, 2:7-9. In the alternative, it would have been obvious to a POSA to configure Karlsson's system to surround

the reduced illumination area with full illumination to the greatest extent possible for the same reason. This would result in the high intensity and low intensity light being laterally adjacent, as claimed.

322. In view the above, Karlsson discloses this element.

5. [72.12] "maintain a variance of illumination provided to the target relative to the laterally adjacent areas, when subsequent data from one or more of the cameras indicates a change in position of the target relative to the motor vehicle, by repeating the determination of target location, selection of the cluster and variance to illumination provided to the target, relative to the laterally adjacent areas, based on the subsequent data."

323. Karlsson discloses "repeatedly controlling the intensity of the light emitted" to minimize glare. EX1010, 2:30-3:6. A POSA would have understood that repeating the process discussed in [72.9]-[72.11] would result in Karlsson's system updating its detected location to account for any vehicle movement based on the new sensor data and, therefore, following any target vehicle. *See* Sections XII.G.1-2. Thus, Karlsson's system performs the detection/illumination steps discussed above repeatedly, updating as necessary for any changes in the position of the detected vehicle.

324. In view the above, Karlsson discloses this element.

J. Claim 73 "The illuminating device of claim. 72, wherein: the variation of illumination provided to the target includes variation in at least one of color or intensity at least a change of at least one LED of the selected cluster to a non-emitting state; the cluster includes a plurality of the LEDs and the cluster includes non-contiguous LEDs; the light directed at the target is determined based at least in part on known directionality of light emitted by the first cluster exiting/ram the at least one headlamp; and at least one of the first data or the subsequent data includes image data."

325. Claim 73 is patentably indistinct from claim 65, and is disclosed or rendered obvious by Karlsson for the same reasons. Sections XII.H.

326. As discussed above, Karlsson's sensor is a camera and produces image data. EX1010, 12:19-24. Regarding the controlled emission element, Karlsson discloses that "light beam 7…[is] controlled in such a manner that *no light at all* or *light having a low intensity* is emitted in those directions from which light is detected." EX1010, 9:18-26, FIGS. 3, 14, 15. Thus, Karlsson discloses a change in emission that includes a change in intensity.

327. Regarding the non-contiguous element, Karlsson's cluster can be selected "for forming random patterns of the light beam" to "provide a desired lighting pattern." EX1010, 13:24-29, 14:26-32. A POSA would have understood that Karlsson's system would automatically function to detect and reduce illumination on any number of targets vehicles. This is especially the case because Karlsson references protecting "traffic" from glare, which a POSA would have understood includes multiple vehicles because of the general

volume of vehicles present on the roadways in the relevant timeframe. EX1010, 9:18-26. When there are two or more separated vehicle targets, as would be the case in most situations with multiple other vehicles present, Karlsson's system would select two areas of non-contiguous LEDs to form the dimmed cluster of LEDs that to cover all of the vehicle targets.

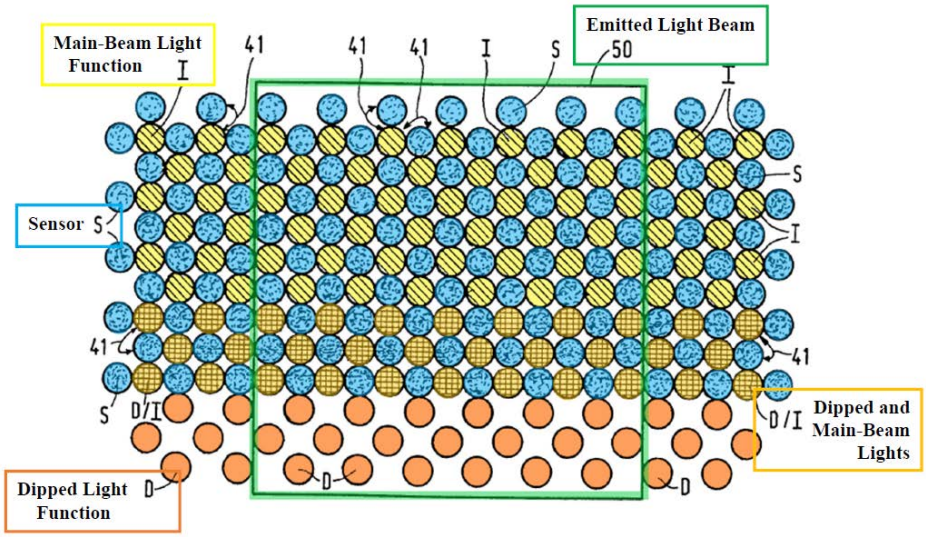

EX1010, FIG. 14 (annotated).

328. In my opinion, a POSA would have understood that Karlsson addresses, or at least suggests, detecting multiple vehicles, and therefore would select non-contiguous LEDs to address multiple, spaced-apart vehicles. However, to the extent that Karlsson does not do so, Nakamura discloses that it was known to detect multiple "*vehicles* (proceeding and oncoming vehicles)" and adjust the headlights to "not expose other *vehicles* to glare." EX1013, ¶¶35, 45. To the extent that Karlsson does not disclose detecting and adjusting light based on multiple vehicles, it would have been obvious to modify Karlsson's

programming in view of Nakamura to do so because this would improve safety and system performance in the likely event of multiple other vehicles being present. This means that Karlsson's modified system would have selected non-contiguous LEDs to address multiple, spaced-apart vehicles.

329. Regarding directionality element element, Karlsson's LEDs are "controlled in such a manner that no light at all or light having a low intensity is emitted in those *directions* from which light is detected." EX1010, 9:18-22. Thus, Karlsson selects a cluster of LEDs that correspond to the direction (the claimed "known aimings") of the target vehicle.

330. In view the above, Karlsson and Nakamura disclose or render obviousthis claim.

K. Independent Claim 80 instructions

1. [80.8]"identify, based on data received from one or more of the sensors, a plurality of positions associated with the target as the target move relative to the motor vehicle; and"

331. Claim element [80.8] is similar to claim element [56.8], but further requires that the system identify "a plurality of positions" of the target vehicle as the target moves. Section XII.C.1. As discussed in [72.12], Karlsson discloses tracking the target vehicle as it moves and updating the position accordingly. Section XII.I.5. Thus, Karlssons' system identifies a plurality of positions associated with vehicle movement as claimed.

332. As I discuss above, Karlsson's "light-sensitive sensor…*detects* the distribution and the intensity of light in the *area ahead of a vehicle*" for "*detecting* light from *oncoming traffic*." EX1010, 2:2-4, Abstract, FIGS. 3, 14, 3:17-31 ("*light of oncoming traffic*"), 12:19-24 ("precisely determining the *direction* and the *intensity* of the *detected light 11*"), 5:16-32. This information is processed to determine the location of the target vehicle, allowing the appropriate LEDs to be controlled. EX1010, 2:2-4, Abstract, FIGS. 3, 14, 3:18-31 ("*light of oncoming traffic*"), 12:19-24 ("precisely determining the *direction* and the *intensity* of the *detected light 11*"), 5:16-32. A POSA would have therefore understood that Karlsson at least implicitly discloses determining vertical and horizontal positions (i.e., coordinates) because the calculated vehicle locations are recorded in some format.

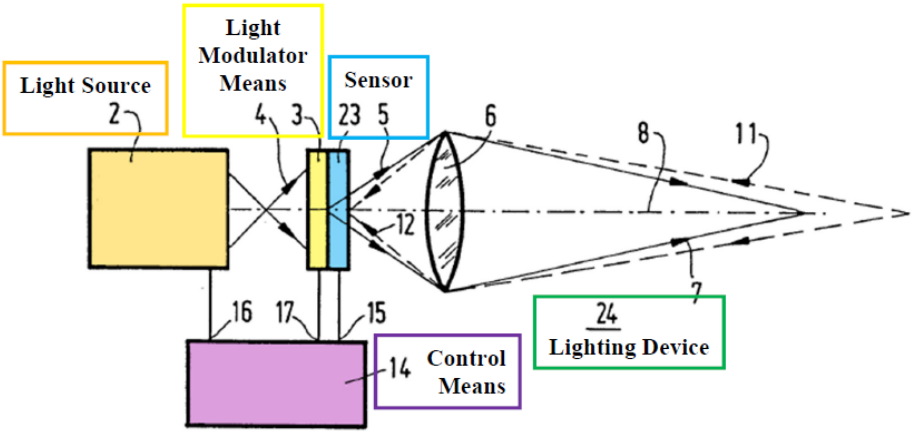

EX1010, FIG. 3 (annotated).

333. Karlsson discloses "repeatedly controlling the intensity of the light emitted" to minimize glare. EX1010, 2:30-3:6. A POSA would have understood

that repeating the process discussed in [72.9]-[72.11] would result in Karlsson's system updating its detected location to account for any vehicle movement based on the new sensor data and, therefore, following any target vehicle. *See* Sections XII.G.1-2. Thus, Karlsson's system performs the detection/illumination steps discussed above repeatedly, updating as necessary for any changes in the position of the detected vehicle.

334. In view the above, Karlsson discloses this element.

1. [80.9] "change, responsive to the positions associated with the target, first light associated with one or more LEDs aimed toward at least a portion of the target, relative to second light associated with other one or more of the LEDs aimed laterally adjacent the target on either side, as the target moves relative to the motor vehicle."

335. Karlsson discloses "repeatedly controlling the intensity of the light emitted" to minimize glare. EX1010, 2:30-3:6. A POSA would have understood that Karlsson's system updating its detected location to account for any vehicle movement based on the new sensor data and, therefore, following any target vehicle. *See* Sections XII.G.1-2. Thus, Karlsson's system changes the first light repeatedly, updating as necessary for any changes in the position of the detected vehicle. The first light would be changed relative to the second light because the second light surrounds the first light.

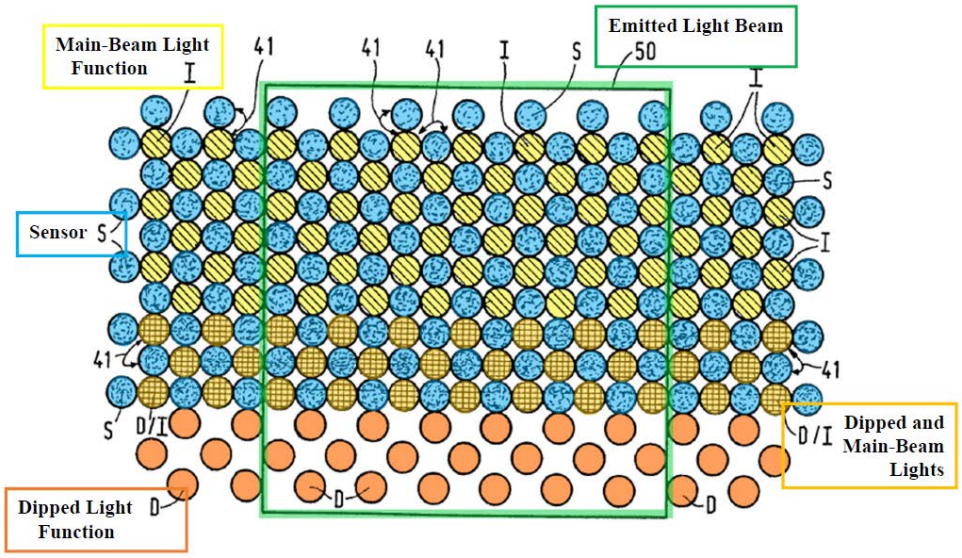

EX1010, FIG. 14 (annotated).

336. In view the above, Karlsson discloses this element.

L. Claim 81 "The illuminating device of claim 80, wherein: the data includes image data; the memory further stores instructions that when executed by one or more processors of the controller, enable the controller to select a first cluster of LEDs, associated with the first light, for the change, based at least in part on known aimings of the first light associated with the first cluster having a correlation to the at least the portion, the known aimings based at least in part on at least one of known directionality of light emitted by the first cluster or known directionality of light emitted by the first cluster exiting the headlamp; and the change to emission of one or more LEDs aimed to towards the at least the portion includes a change to intensity or color or a chance of a least one of the LEDs to a non-emitting state."

337. Claim 81 is patentably indistinct from claim 57 and is taught by Karlsson for the same reasons. Sections XII.D.

338. Karlsson's sensor is a camera and produces image data. EX1010, 12:19-24. Regarding the controlled emission element, Karlsson discloses that "light beam 7…[is] controlled in such a manner that *no light at all* or *light having a low*

intensity is emitted in those directions from which light is detected." EX1010, 9:18-26, FIGS. 3, 14, 15. Thus, Karlsson discloses a change in emission that includes a change in intensity.

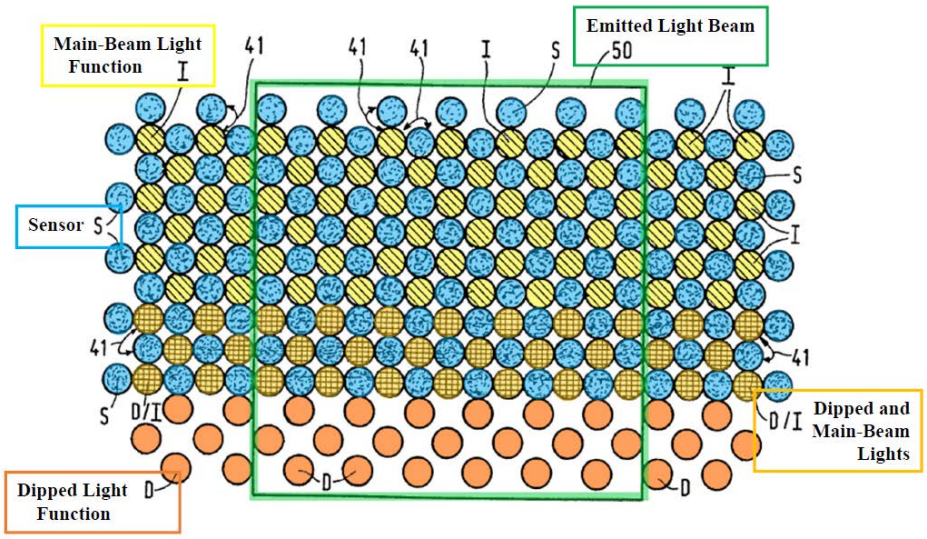

EX1010, FIG. 14 (annotated).

339. Regarding the known aimings element, Karlsson's LEDs are "controlled in such a manner that no light at all or light having a low intensity is emitted in those *directions* from which light is detected." EX1010, 9:18-22. This teaches the claimed "known aimings of the first light" because the known aiming is the direction of the dimmed area that corresponds to the target vehicle. Thus, Karlsson selects a cluster of LEDs that correspond to the direction (the claimed "known aimings") of the target vehicle.

340. In view the above, Karlsson discloses this claim.

341. Thus, the combination of Karlsson and Nakamura renders obvious claims 56, 57, 62–65, 70–73, 78–81, and 86–87 of the '551 patent.

XIII. GROUND 4: KARLSSON, NAKAMURA, AND GOTOU RENDER OBVIOUS CLAIMS 58–61, 66–69, 74–77, AND 82–85.

A. A POSA would have been motivated to combine Karlsson, Nakamura, and Gotou with a reasonable expectation of success.

342. As discussed above, a POSA would have motivated to combine Karlsson and Nakamura to incorporate Nakamura's coordinate and detection algorithm teachings in Karlsson's system. Section XI.A. Gotou is from the same technical field as both Karlsson and Nakamura—adaptive vehicle headlight systems. EX1012, 1:5-9, 1:52-59, Abstract, FIGS. 1-2. A POSA would have been further motivated to modify Karlsson's adaptive anti-blinding headlamp system to adjust light based on map data, as in Gotou, to further control Karlsson's directional LEDs to illuminate roadway curves, thereby improving driver safety—an express purpose of Karlsson. *See*, *e.g.*, EX1010, 1:16-26, 4:16-21, 9:18-26.

343. *First*, including Gotou's *known technique* of using map data would have enhanced Karlsson's system by increasing or adjusting illumination based on the road curvature, improving driver safety by providing light to where it is needed. *Second*, a POSA would have easily incorporated *known components* of Gotou's navigation system 30 to add map data as an input to Karlsson's control means 14. EX1012, 3:52-62. This would have provided advanced road curvature data to Karlsson' system, allowing Karlsson increase illumination in a direction of the road curvature in advance of the curve like Kobayashi, further improving safety.

344. Karlsson's "direction sensor 54" detects the angle of the steering wheel "for determining when the car 56 is taking a bend, so that light beam 7 can be adapted." EX1010, 20:22-32. Karlsson does not disclose using map data, such as from GPS or navigation beacons, as an input to control the intensity, shape, and/or angular position of the LEDs (or their resultant beam), but it would have been obvious to a POSA to do so. Adding Gotou's map data would improve the performance of the existing system that relies only on the wheel direction because it allows the system to predict turns farther in advance. This would have improved the safety and performance of Karlsson's system.

345. Gotou's *techniques and system components*, like Karlsson's, seek to enhance driver safety—by using map data-based control. EX1012, 1:14-20, 2:19-26, 6:40-44. Gotou explains that controlling the shape of the light to correspond with the driver's changing line of sight (ahead of a curve) enhances safety. EX1012, 6:40-44. Gotou's ECU 10 controls motor 8, adjusting the position of the headlight 2 based on the map data received from navigation system 30. EX1012, 3:24-47, 3:52-62.

346. A POSA would have understood that including an additional data source for Karlsson's control means 14—Gotou's map data—would have enhanced Karlsson's system by increasing illumination based on the road curvature (and directing it to needed areas), improving driver safety. Doing so would have merely been applying Gotou's known technique (using map data from Gotou's navigation

system to shape and reshape light and/or adjust intensity) to Karlsson's similar, known device (dynamic headlight system based on light sensing inputs that directs light to needed areas and away from undesired areas), in the same way. Gotou's known technique is fully described along with its benefits (e.g., improved safety); thus, a POSA would have readily applied it to similar systems, such as Karlsson's, in the same way.

347. Additionally, or alternatively, this modification would have been simply combining known prior-art elements (e.g., Karlsson's adaptive, directional-controllable LED headlamps and Gotou's directional control based on map data from navigation system 30). This modification would also have been using known methods (disclosed in Karlsson and Gotou) to yield predictable results (e.g., improved safety for the equipped vehicle and other vehicles on the road, further directional light control to where it is needed, and preemptive light control before entering a curve).

348. A POSA would have had a reasonable expectation of success modifying Karlsson-Nakamura in view of Gotou. A POSA would have understood *how* to combine the teachings of Karlsson and Gotou, for example, by simply modifying software instructions stored in memory of Karlsson controller/processor (e.g., ECU) to adjust and direct light of the LEDs appropriately in view of Gotou's map data. It also would have been straightforward to combine Gotou's navigation

system 30 (e.g., including GPS receiver 34) with Karlsson's system. Such modifications would have been routine and well within a POSA's skill due to the similarities in Karlsson's and Gotou's adaptive light control systems and methods—their common components were well-known and there would have been no limitations for a POSA to make such modifications. In applying Gotou's technique to Karlsson, a POSA would have simply been applying a known technique in a predictable way— controlling headlights in part based on map data—in the same way already disclosed in the art.

B. Claims 58/66/74/82 "The illuminating device of claim 56, wherein the memory further stores instructions that when executed by one or more processors of the controller, enable the controller to: identify an upcoming road curvature along a road on which the motor vehicle is traveling; and accommodate the upcoming road curvature by adaptation of a light pattern of at least one of the at least one headlamps."

349. As explained above, a POSA would have been motived to combine Karlsson in view of Gotou to add map-based curve anticipation to improve Karlsson's performance. Section XII.A. Gotou's system works when "a *curved part* or the like is *foreseen in advance in reference to both map information of the navigation system* and information of the proper or subject vehicle position on the map, and the lighting region is changed *before* entering the *curved part*." EX1012, Abstract, 1:6-48, 1:51-59, 3:24-4:49, 8:9-41.

350. Karlsson's modified system would incorporate map data from Gotou's navigation system 30 into control means 14, and control the LEDs accordingly. By including an additional data source for Karlsson's control means 14 (Gotou's map data), a POSA would have improved performance and safety of Karlsson's by increasing illumination based on the road curvature.

351. In view the above, Karlsson, Nakamura, and Gotou render obvious these claims.

C. Claims 59/67/75/83 "The illuminating device of claim 58, wherein: the changed emission includes a change to at least one of intensity or color or a change of at least one LED of the cluster to a non-emitting state; the cluster includes a plurality of the LEDS and the cluster includes non-contiguous LEDs; and the memory further stores instructions that, when executed one or more processors of the controller, enable the controller to accommodate the road curvature by changing illumination in at least a direction of the road curvature by adaptation of the light pattern in at least one of color, intensity or spatial distribution by LEDs."

352. The first elements of this claim are patentably indistinct from claim 57, and disclosed or rendered obvious by Karlsson for the same reasons. Section XII.D The final element of this claim is similar to claim 58, but requires that the road curvature tracking be accomplished by "changing illumination in at least a direction of the road curvature by adaptation of the light pattern in at least one of color, intensity, or spatial distribution by LEDs." Section XIII.B. In modified Karlsson, a POSA would have been motivated to adapt the LED light pattern to illuminate the

road curve by altering, for example, the intensity or distribution of the LEDs so that the portion of the illuminated are containing the curved roadway is properly light.

353. In view the above, Karlsson, Nakamura, and Gotou render obvious these claims.

D. Claims 60/68/76/84 "The illuminating device claim 58, wherein identification of the upcoming road curvature is based at least in part on map data and wherein the adaptation of the light pattern is based at least in part on the map data."

354. Gotou's system works when "a curved part or the like is foreseen in advance in reference to both map information of the navigation system and information of the proper or subject vehicle position on the map." EX1012, 1:6-47, Abstract, 1:51-59, 3:24-4:49, 8:9-41. Thus, Gotou's discloses using map data, which is created in Gotou's "a navigation system 30" using "a GPS receiver 34." EX1012, 3:52-4:11.

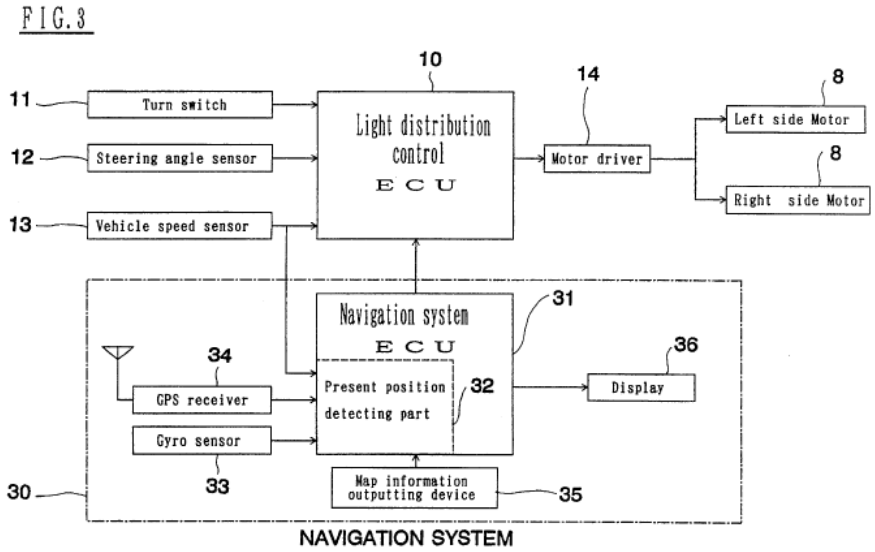

EX1012, FIG. 3.

355. Karlsson as modified by Gotou would therefore include map data as part of its inputs to predict the upcoming road curvatures. Section XIII.A.

356. In view the above, Karlsson, Nakamura, and Gotou render obvious these claims.

E. Claim 61/69/77/85 "The illuminating device of claim 58, wherein the identification of the upcoming road curvature is based at least in part on sensor data provided by one or more of the sensors of the vehicle and wherein the adaptation of the light pattern is based in part on map data."

357. Gotou discloses several sensors that are used as part of the road curvature prediction process. For example, a "GPS receiver 34," a "gyro-sensor 33," and a "vehicle speed sensor 13" are all used as input into the road prediction process. EX1012, 4:1-14. These sensors are used to ultimately determine "an accurate position of the proper vehicle" that is used to output map information. EX1012, 4:1-14. Gotou also discloses using "map information of the navigation system" to predict curvature and modify lighting. EX1012, 3:49-62. Thus, modified Karlsson would include various sensors and map data as part of its inputs to predict the upcoming road curvatures.

358. In view the above, Karlsson, Nakamura, and Gotou render obvious these claims.

359. Thus, Karlsson, Nakamura, and Gotou render obvious claims 58–61, 66–69, 74–77, and 82–85 of the '551 patent.

XIV. THE ALLEGED SECONDARY CONSIDERATIONS DO NOT DEMONSTRATE NONOBVIOUSNESS

360. I understand that a patent owner may submit additional evidence that demonstrates why a patent claim is not obvious. This so-called secondary consideration evidence can be directed at several different factors, such as copying, commercial success, or a long-felt unmet need. I also understand that the secondary considerations evidence must have a nexus with the relevant patent claim to be considered proper evidence of secondary considerations. For example, when the evidence stems from a commercial product, there is a presumption of nexus when the product is coextensive with the patent claim. I understand that a patent owner may also show nexus by demonstrating that the evidence is the direct result of the unique characteristics of the claimed invention.

361. Here, counsel for Petitioner has requested that I review alleged secondary considerations evidence Patent Owner submitted during reexamination of the ’551 patent. EX1002, 0066-83. Petitioner’s counsel requested that I consider if the secondary considerations evidence changed the technical opinions I deliver in this report. As I explain below, the alleged secondary considerations evidence does not change my opinions in this report.

362. Initially, I note that Patent Owner cites alleged industry praise, EX1002, 0066-77, and long felt need, EX1002, 0077-83. However, I do not see a link between the evidence, which consists of various industry reports, publications,

and awards, and the challenged claims. There is no alleged product linked to the claims that corresponds to this evidence. Further, I do not see an apparent link between the evidence and these claims. For example, Patent Owner does not explain how an award given to HELLA for a headlamp is directly linked to the claims here. EX1002, 0066-72.

363. Technically, the various pieces of evidence seem to only involve applications of adaptive headlight technology that were known before the critical priority date of the ’551 patent. Thus, my opinions in this report are not changed in view of this alleged secondary considerations evidence.

CONCLUSION

In signing this Declaration, I recognize that this Declaration will be filed as evidence in an *inter partes* review before the Patent Trial and Appeal Board of the United States Patent and Trademark Office. I also recognize that I may be subject to cross-examination in the case and that cross-examination will take place within the United States. If cross-examination is required, I will appear for cross-examination within the United States during the time allotted.

I hereby declare that all statements made herein are made of my own knowledge and are true and that all statements made on information and belief are believed to be true; and further that these statements were made with the knowledge that willful false statements and the like so made are punishable by fine or imprisonment, or both, under Section 1001 of Title 18 of the United States Code.

Executed on this 19th day of December 2022, in San Francisco, California.

Jianzhong Jiao, Ph.D.

Appendix A: Claim Comparison Tables

Independent Claim Structural Elements			
Claim 56	Claim 64	Claim 72	Claim 80
[56.p] An illuminating device having automatic control of light provided to an illuminated area comprising:	[64.p] An illuminating device having automatic control of light provided to an illuminated area comprising:	[72.p] An illuminating device having automatic control of the light provided to an illuminated area comprising:	[80.p] An illuminating device having automatic control of light provided to an illuminated area comprising:
[56.1] a structure for incorporating illuminating device elements, wherein the structure comprises a motor vehicle;	[64.1] a structure for incorporating illuminating device elements, wherein the structure comprises a motor vehicle;	[72.1] a structure for incorporating illuminating device elements, wherein the structure comprises a motor vehicle;	[80.1] a structure for incorporating illuminating device elements, wherein the structure comprises a motor vehicle;
[56.2] a plurality of individually controllable LEDs incorporated in the structure via at least one headlamp mounted to the structure, each headlamp including at least one of the LEDs, the LEDs in communication with a power source;	[64.2] a plurality of individually controllable LEDs incorporated in the structure via at least one headlamp mounted to the structure, each headlamp including at least one of the LEDs and in communication with a power source;	[72.2] a plurality of individually controllable LEDs incorporated in the structure via at least one headlamp mounted to the structure, each headlamp including at least one of the LEDs, the LEDs in communication with a power source;	[80.2] a plurality of individually controllable LEDs incorporated in the structure via at least one headlamp mounted to the structure, each headlamp including at least one of the LEDs, the LEDs in communication with a power source;
[56.3] electronic circuitry apparatus for the controlled powering of the LEDs and other of the illuminating device elements;	[64.3] electronic circuitry apparatus for the controlled powering of the LEDs and other of the illuminating device elements;	[72.3] electronic circuitry apparatus for the controlled powering of the LEDs and other elements of the illuminating device elements;	[80.3] electronic circuitry apparatus for the controlled powering of the LEDs and other of the illuminating device elements;

[56.4]one or more processors;	[64.4] one or more processors;	[72.4] one or more processors;	[80.4] one or more processors;
[56.5] one or more sensors, including one or more cameras, place[d] on the structure for detecting coordinate-specific information about the illuminated area and positioned to capture an image of at least one other vehicle ahead of the motor vehicle, at least one of said cameras in communication with power, and in communication with at least one of the one or more processors	[64.5] one or more sensors, including one or more cameras, placed on the structure for detecting coordinate-specific information about the illuminated area and positioned to capture an image of another vehicle, at least one of said cameras in communication with power, and in communication with at least one of the one or more processors	[72.5] one or more sensors, including one or more cameras, placed on the structure for detecting coordinate-specific information about the illuminated area, at least one of said cameras in communication with power, and in communication with at least one of the one or more processors;	[80.5] one or more sensors, including one or more cameras, placed on the structure for detecting coordinate-specific information about the illuminated area and positioned to capture camera data indicating a target ahead of the motor vehicle, at least one of said cameras in communication with power, and in communication with at least one of the one or more processors
[56.6] a controller, including at least one o[f] the one or more processors, integrated with the structure via mounting, in communication with the LED controlling power electronic circuitry apparatus, said controller arranged to process the information communicated from the cameras and to automatically control the light provided to the illuminated area; and	[64.6] a controller, including at least one of the one or more processors, integrated with the structure via mounting, in communication with the LED controlling power electronic circuitry apparatus, said controller arranged to process the information communicated from the cameras and to automatically control the light provided to the illuminated area; and	[72.6] a controller, including at least one of the one or more processors, integrated with the structure via mounting, in communication with the LED controlling power electronic circuitry apparatus, said controller arranged to process the information communicated from the cameras and to automatically control the light provided to the illuminated area; and	[80.6] a controller, including at least one of the one or more processors, integrated with the structure via mounting, in communication with the LED controlling power electronic circuitry apparatus, said controller arranged to process the information communicated from the cameras and to automatically control the light provided to the illuminated area; and
[56.7] memory storing instructions that, when executed by one or more	[64.7] memory storing instructions that, when executed by one or more	[72.7] memory storing instructions that, when executed by one or more	[80.7] memory storing instructions that, when executed by one or more

processors of the controller, enable the controller to:	processors of the controller, enable the controller to:	processors of the controller, enable the controller to:	processors of the controller, enable the controller to:
Independent Claim Instructional Elements			
[56.8] determine, based on data from one or more of the sensors, a vertical and horizontal position associated with the at least one other vehicle;	[64.8] select a first cluster of the LEDs having light associated there that is directed towards the other vehicle based at least in part on first data from one or more of the sensors indicating a first position associated with the other vehicle;	[72.8] determine a target based on first data from one or more of the sensors; [72.9] determine a first target location based on the first data;	[80.8] identify, based on data received from one or more of the sensors, a plurality of positions associated with the target as the target move relative to the motor vehicle; and
[56.9] select a first cluster of the LEDs based at least in part on at least one of the vertical and horizontal position compared to known aimings of light associated with the first cluster; and		[72.10] select a cluster of the LEDs having light associated therewith that is directed at the target, determined based on the first target location;	
[56.10] reduce intensity of illumination to non-glaring illumination of a first area associated with the at least one other vehicle, relative intensity of illumination on both sides of the first area at elevations common with the first area illuminated by a second cluster of the	[64.9] control a first change to one or more characteristics of the light associated with the first cluster of the LEDs that is directed towards the other vehicle, that diminishes glare to a driver of the other vehicle when the other vehicle is at the first position;	[72.11] vary illumination provided to the target by the selected cluster, relative to illumination provided to areas laterally adjacent to the target and provided by at least one LED different from LEDs in the selected cluster; and	[80.9] Change, responsive to the positions associated with the target, first light associated with one or more LEDs aimed toward at least a portion of the target relative to second light associated with other one or more of the LEDs aimed laterally adjacent the target on either side, as the target moves

			relative to the motor vehicle.
	[64.10] select a second, different cluster of the LEDs having light associated therewith that is directed towards the other vehicle based at least in part on second, subsequent data from one or more of the sensors indicating a second, subsequent position associated with the other vehicle; and		
	[64.11] control a second, subsequent change, to one or more characteristics of the light that is subsequently directed towards the other vehicle, that diminishes glare to the driver of the other vehicle when the other vehicle is at the second position.	[72.12] maintain a variance of illumination provided to the target relative to the laterally adjacent areas, when subsequent data from one or more of the cameras indicates a change in position of the target relative to the motor vehicle, by repeating the determination of target location, selection of the cluster and variance to illumination provided to the target, relative to the laterally adjacent areas, based on the subsequent data.	
Claims 58/66/74/82			
58. The illuminating device of claim 56	66. The illuminating device of claim 64,	74. The illuminating device of claim 72,	82. The illuminating device of claim 80,

wherein the memory further stores instructions that when executed by one or more processors of the controller, enable the controller to: identify an upcoming road curvature along a road on which the motor vehicle is traveling; and accommodate the upcoming road curvature by adaptation of a light pattern of at least one of the headlamps.	wherein the memory further stores instructions that, when executed by one or more processors of the controller, enable the controller to: identity an upcoming road curvature along a road on which the motor vehicle is traveling; and accommodate the upcoming road curvature by adaptation of a light pattern of at least one of the headlamps.	wherein the memory further stores instructions that, when executed by one or more processors of the controller, enable the controller to: identify an upcoming road curvature along a road on which the motor vehicle is traveling; and accommodate the upcoming road curvature by adaptation of a light pattern of at least one of the headlamps.	wherein the memory further stores instructions that, when executed by one or more processors of the controller, enable the controller to: identify an upcoming road curvature along a road on which the motor vehicle is traveling; and accommodate the upcoming road curvature by adaptation of a light pattern of [at] least one of the … headlamps.
Claim 59/67/75/83			
59. The illuminating device of claim 58, wherein: the control of emission of the first cluster includes a change of least one of color or intensity or control of at least one LED of the first cluster into a non-emitting state; at least one of the first cluster or the second cluster includes a plurality of the LEDs and at least one of the first cluster	67. The illuminating device of claim 66, wherein: at least one of the first or second change to characteristics of light associated with at least one of the first or second cluster of LEDs includes at least one of a change to color, to intensity, or a change of at least one LED of the respective duster to a non-emitting state; at least one of the first cluster or the second cluster includes a plurality of	75. The illuminating device of claim 74, wherein: the variation of illumination provided to the target includes variation in at least one of color or intensity or at least a change of at least one LED of the selected cluster to a non-emitting state the selected cluster includes a plurality of the LEDs and the selected cluster includes non-contiguous LEDs;	83. The illuminating device of claim 82, wherein: the change to emission of the one or more LEDs aimed towards the at least the portion includes a change to intensity or color or a change of at least one of the LEDs to a non-emitting state; the memory further stores instructions that when executed by one or more processors of the controller, enable the controller to select a

or the second cluster includes non-contiguous LEDs; the known light aiming associated with the first cluster is based at least on part on known directionality of light emitted by LEDs of the first cluster exiting from the at least one headlamp; and the memory further stores instructions that, when executed by one or more processors of the controller, enable the controller to accommodate the road curvature by changing illumination in at least a direction of the road curvature by adaptation of the light pattern in at least one of color, intensity or spatial distribution by modification of light associated with one or more of the LEDs.	the LEDs and at least one of the first cluster or the second cluster includes non-contiguous LEDs; the light that is directed or subsequently directed towards the other vehicle is determined based at least in part on known directionality of light emitted by the respective first or second cluster exiting the at least one headlamp; and the memory further stores instructions that, when executed by one or more processors of the controller, enable the controller to accommodate the road curvature by changing illumination in at least a direction of the road curvature by adaptation of the light pattern in at least one of color, intensity or spatial distribution by modification of light associated with one or more of the LEDs.	the light directed at the target is determined based at least in part on known directionality of light emitted by the first cluster exiting/ram the at least one headlamp; and the memory further stores instructions that, when executed by one or more processors of the controller, enable the controller to accommodate the road curvature by changing illumination in at least a direction of the road curvature by adaptation of the light pattern in at least one of color, intensity or spatial distribution by modification of light associated with one or more of the LEDs.	first cluster of LEDs, associated with the first light, for the change, based at least in part on known aimings of the first light associated with the first cluster having a correlation to the at least the portion, the known aimings based at least in part on at least one of known directionality of light emitted by the first cluster or known directionality of light emitted by the first cluster exiting the headlamp; and the memory further stores instructions that when executed by one or more processors of the controller, enable the controller to accommodate the road curvature by changing illumination in at least a direction of the road curvature by adaptation of the light pattern in at least one of color, intensity or spatial distribution by modification of light associated with one or more of the LEDs.

Claims 60/68/76/84			
60. The illuminating device of claim 58, wherein the identification of the upcoming road curvature is based at least in part on map data and wherein the adaptation of the light pattern is based at least in part on the map data.	68. The illuminating device of claim 66, wherein the identification of the upcoming road curvature is based at least in part on map data and wherein the adaptation of the light pattern is based at least in part on the map data.	76. The illuminating device of claim 74, wherein the identification of the upcoming road curvature is based at least in part on map data and wherein the adaptation of the light pattern is based at least in part on the map data.	84. The illuminating device of claim 82, wherein the identification of the upcoming road curvature is based at least in part on map data and wherein the adaptation of the light pattern is based at least in part on the map data.
Claims 61/69/77/85			
61. The illuminating device of claim 58, wherein the identification of the upcoming road curvature is based at least in part on sensor data provided by one or more of the sensors of the vehicle and wherein the adaptation of the light pattern is based at least in part on the sensor data.	69. The illuminating device of claim 66, wherein the identification of the upcoming road curvature is based at least in part on sensor data provided by one or more of the sensors of the vehicle and wherein the adaptation of the light pattern is based at least in part on the sensor data.	77. The illuminating device of claim 74, wherein the identification of the upcoming road curvature is based at least in part on sensor data provided by one or more of the sensors of the vehicle and wherein the adaptation of the light pattern is based at least in part on the sensor data.	85. The illuminating device of claim 82, wherein the identification of the upcoming road curvature is based at least in part on sensor data provided by one or more of the sensors of the vehicle and wherein the adaptation of the light pattern is based at least in part on the sensor data.
Claims 62/70/78/86			
62. The illuminating device of claim 56, further including one or more optical control elements to control light emitted from one or more of the LEDs.	70. The illuminating device of claim 64, further including one or more optical control elements to control light emitted from one or more of the LEDs.	78. The illuminating device of claim 72, further including one or more optical control element to control light emitted from one or more of the LEDs.	86. The illuminating device of claim 80, further including one or more optical control elements to control emitted from one or more of the LEDs.
Claim 65 Comparing to Claim 57			

65. The illuminating device of claim 64, wherein: the first data or second data includes image data; at least one of the first or second change to characteristics of light associated with at least one of the first or second cluster of LEDs includes at least one of a change to color, to intensity, or a change of at least one LED respective cluster to a non-emitting state; at least one of the first cluster or the second cluster includes a plurality of the LEDs and at least one of [t]he first cluster or the second cluster includes non-contiguous LEDs; and the light that is directed or subsequently directed towards the other vehicle is determined based at least in part on known directionality of light emitted by the respective first or second cluster exiting the at least one headlamp.	57. The illuminating device of claim 56, wherein: the data includes image data; the control of emission of the first cluster includes a change of at least one of color or intensity or control of at least one LED of the first cluster into a nonemitting state; at least one of the first cluster second cluster includes a plurality of the LEDs and at least one of the first cluster or the second cluster includes non-contiguous LEDs; and the known light aimings associated with the first cluster is based at least on art on known directionality of light emitted by LEDs of the first cluster exiting from the at least one headlamp.

Claim 73 Comparing to Claim 65	
73. The illuminating device of claim. 72, wherein: the variation of illumination provided to the target includes variation in at least one of color or intensity at least a change of at least one LED of the selected cluster to a non-emitting state; the cluster includes a plurality of the LEDs and the cluster includes non-contiguous LEDs; the light directed at the target is determined based at least in part on known directionality of light emitted by the first cluster exiting/ram the at least one headlamp; and at least one of the first data or the subsequent data includes image data.	65. The illuminating device of claim 64, wherein: the first data or second data includes image data; at least one of the first or second change to characteristics of light associated with at least one of the first or second cluster of LEDs includes at least one of a change to color, to intensity, or a change of at least one LED respective cluster to a non-emitting state; at least one of the first cluster or the second cluster includes a plurality of the LEDs and at least one of he first cluster or the second cluster includes non-contiguous LEDs; and the light that is directed or subsequently directed towards the other vehicle is determined based at least in part on known directionality of light emitted by the respective first or second cluster exiting the at least one headlamp.
Claim 81 Comparing to Claim 57	
81. The illuminating device of claim 80, wherein: the data includes image data; the memory further stores instructions that when executed by one or more processors of the controller, enable the controller to select a first cluster of LEDs, associated with the first light, for the change, based at least in part on known aimings of the first light associated with the first cluster having a correlation to the at least the portion, the known aimings based at least in part on at least one of known directionality of light emitted by the first cluster or known directionality of light emitted by the first cluster exiting the headlamp; and	57. The illuminating device of claim 56, wherein: the data includes image data; the control of emission of the first cluster includes a change of at least one of color or intensity or control of at least one LED of the first cluster into a nonemitting state; at least one of the first cluster second cluster includes a plurality of the LEDs and at least one of the first cluster or the second cluster includes non-contiguous LEDs; and the known light aimings associated with the first cluster is based at least on art on known directionality of light emitted by LEDs of the

the change to emission of one or more LEDs aimed to towards the at least the portion includes a change to intensity or color or a chance of a least one of the LEDs to a non-emitting state.	first cluster exiting from the at least one headlamp.

Appendix B: Claim Listing

Element Number	Element
56.P	An illuminating device having automatic control of light provided to an illuminated area comprising:
56.1	a structure for incorporating illuminating device elements, wherein the structure comprises a motor vehicle;
56.2	a plurality of individually controllable LEDs incorporated in the structure via at least one headlamp mounted to the structure, each headlamp including at least one of the LEDs, the LEDs in communication with a power source;
56.3	electronic circuitry apparatus for the controlled powering of the LEDs and other of the illuminating device elements;
56.4	one or more processors;
56.5	one or more sensors, including one or more cameras, place on the structure for detecting coordinate-specific information about the illuminated area and positioned to capture an image of at least one other vehicle ahead of the motor vehicle, at least one of said cameras in communication with power, and in communication with at least one of the one or more processors;
56.6	a controller, including at least one o the one or more processors, integrated with the structure via mounting, in communication with the LED controlling power electronic circuitry apparatus, said controller arranged to process the information communicated from the cameras and to automatically control the light provided to the illuminated area; and
56.7	memory storing instructions that, when executed by one or more processors of the controller, enable the controller to:
56.8	determine, based on data from one or more of the sensors, a vertical and horizontal position associated with the at least one other vehicle;
56.9	select a first cluster of the LEDs based at least in part on at least one of the vertical and horizontal position compared to known aimings of light associated with the first cluster; and
56.10	reduce intensity of illumination to non-glaring illumination of a first area associated with the at least one other vehicle, relative intensity of illumination on both sides of the first area at elevations

	common with the first area illuminated by a second cluster of the LEDs, by control of emission from the first cluster.
57	The illuminating device of claim 56, wherein: the data includes image data; the control of emission of the first cluster includes a change of at least one of color or intensity or control of at least one LED of the first cluster into a non-emitting state; at least one of the first cluster second cluster includes a plurality of the LEDs and at least one of the first cluster or the second cluster includes non-contiguous LEDs; and the known light aimings associated with the first cluster is based at least on art on known directionality of light emitted by LEDs of the first cluster exiting from the at least one headlamp.
58	The illuminating device of claim 56 wherein the memory further stores instructions that, when executed by one or more processors of the controller, enable the controller to: identify an upcoming road curvature along a road on which the motor vehicle is traveling; and accommodate the upcoming road curvature by adaptation of a light pattern of at least one of the headlamps.
59	The illuminating device of claim 58, wherein: the control of emission of the first cluster includes a change of least one of color or intensity or control of at least one LED of the first cluster into a non-emitting state; at least one of the first cluster or the second cluster includes a plurality of the LEDs and at least one of the first cluster or the second cluster includes non-contiguous LEDs; the known light aiming associated with the first cluster is based at least on part on known directionality of light emitted by LEDs of the first cluster exiting from the at least one headlamp; and the memory further stores instructions that, when executed by one or more processors of the controller, enable the controller to accommodate the road curvature by changing illumination in at least a direction of the road curvature by adaptation of the light pattern in at least one of color, intensity or spatial distribution by modification of light associated with one or more of the LEDs.
60	The illuminating device of claim 58, wherein the identification of the upcoming road curvature is based at least in part on map data and wherein the adaptation of the light pattern is based at least in part on the map data.

61	The illuminating device of claim 58, wherein the identification of the upcoming road curvature is based at least in part on sensor data provided by one or more of the sensors of the vehicle and wherein the adaptation of the light pattern is based at least in part on the sensor data.
62	The illuminating device of claim 56, further including one or more optical control elements to control light emitted from one or more of the LEDs.
63	The illuminating device of claim 62, wherein the optical control elements include at least one of one or more reflectors, refractors or lenses.
64.P	An illuminating device having automatic control of light provided to an illuminated area comprising:
64.1	a structure for incorporating illuminating device elements, wherein the structure comprises a motor vehicle;
64.2	a plurality of individually controllable LEDs incorporated in the structure via at least one headlamp mounted to the structure, each headlamp including at least one of the LEDs and in communication with a power source;
64.3	electronic circuitry apparatus for the controlled powering of the LEDs and other of the illuminating device elements;
64.4	one or more processors;
64.5	one or more sensors, including one or more cameras, placed on the structure for detecting coordinate-specific information about the illuminated area and positioned to capture an image of another vehicle, at least one of said cameras in communication with power, and in communication with at least one of the one or more processors;
64.6	a controller, including at least one of the one or more processors, integrated with the structure via mounting, in communication with the LED controlling power electronic circuitry apparatus, said controller arranged to process the information communicated from the cameras and to automatically control the light provided to the illuminated area; and
64.7	memory storing instructions that, when executed by one or more processors of the controller, enable the controller to:
64.8	select a first cluster of the LEDs having light associated there that is directed towards the other vehicle based at least in part on first data from one or more of the sensors indicating a first position associated with the other vehicle;

64.9	control a first change to one or more characteristics of the light associated with the first cluster of the LEDs that is directed towards the other vehicle, that diminishes glare to a driver of the other vehicle when the other vehicle is at the first position;
64.10	select a second, different cluster of the LEDs having light associated therewith that is directed towards the other vehicle based at least in part on second, subsequent data from one or more of the sensors indicating a second, subsequent position associated with the other vehicle; and
64.11	control a second, subsequent change, to one or more characteristics of the light that is subsequently directed towards the other vehicle, that diminishes glare to the driver of the other vehicle when the other vehicle is at the second position.
65	The illuminating device of claim 64, wherein: the first data or second data includes image data; at least one of the first or second change to characteristics of light associated with at least one of the first or second cluster of LEDs includes at least one of a change to color, to intensity, or a change of at least one LED respective cluster to a non-emitting state; at least one of the first cluster or the second cluster includes a plurality of the LEDs and at least one of [t]he first cluster or the second cluster includes non-contiguous LEDs; and the light that is directed or subsequently directed towards the other vehicle is determined based at least in part on known directionality of light emitted by the respective first or second cluster exiting the at least one headlamp.
66	The illuminating device of claim 64, wherein the memory further stores instructions that, when executed by one or more processors of the controller, enable the controller to: identify an upcoming road curvature along a road on which the motor vehicle is traveling; and accommodate the upcoming road curvature by adaptation of a light pattern of at least one of the headlamps.
67	The illuminating device of claim 66, wherein: at least one of the first or second change to characteristics of light associated with at least one of the first or second cluster of LEDs includes at least one of a change to color, to intensity, or a change of at least one LED of the respective duster to a non-emitting state;

	at least one of the first cluster or the second cluster includes a plurality of the LEDs and at least one of the first cluster or the second cluster includes non-contiguous LEDs; the light that is directed or subsequently directed towards the other vehicle is determined based at least in part on known directionality of light emitted by the respective first or second cluster exiting the at least one headlamp; and the memory further stores instructions that, when executed one or more processors of the controller, enable the controller to accommodate the road curvature by changing illumination in at least a direction of the road curvature by adaptation of the light pattern in at least one of color, intensity or spatial distribution by modification of light associated with one or more of the LEDs.
68	The illuminating device of claim 66, wherein the identification of the upcoming road curvature is based at least in part on map data and wherein the adaptation of the light pattern is based at least in part on the map data.
69	The illuminating device of claim 66, wherein the identification of the upcoming road curvature is based at least in part on sensor data provided by one or more of the sensors of the vehicle and wherein the adaptation of the light pattern is based at least in part on the sensor data.
70	The illuminating device of claim 64, further including one or more optical control elements to control light emitted from one or more of the LEDs.
71	The illuminating device of claim 70, wherein the optical control elements include at least one of one or more reflectors, refractors or lenses.
72.P	An illuminating device having automatic control of the light provided to an illuminated area comprising:
72.1	a structure for incorporating illuminating device elements, wherein the structure comprises a motor vehicle;
72.2	a plurality of individually controllable LEDs incorporated in the structure via at least one headlamp mounted to the structure, each headlamp including at least one of the LEDs, the LEDs in communication with a power source;
72.3	electronic circuitry apparatus for the controlled powering of the LEDs and other elements of the illuminating device elements;
72.4	one or more processors;

72.5	one or more sensors, including one or more cameras, placed on the structure for detecting coordinate-specific information about the illuminated area, at least one of said cameras in communication with power, and in communication with at least one of the one or more processors;
72.6	a controller, including at least one of the one or more processors, integrated with the structure via mounting, in communication with the LED controlling power electronic circuitry apparatus, said controller arranged to process the information communicated from the cameras and to automatically control the light provided to the illuminated area; and
72.7	memory storing instructions that, when executed by one or more processors of the controller, enable the controller to:
72.8	determine a target based on first data from one or more of the sensors;
72.9	determine a first target location based on the first data;
72.10	select a cluster of the LEDs having light associated therewith that is directed at the target, determined based on the first target location;
72.11	vary illumination provided to the target by the selected cluster, relative to illumination provided to areas laterally adjacent to the target and provided by at least one LED different from LEDs in the selected cluster; and
72.12	maintain a variance of illumination provided to the target relative to the laterally adjacent areas, when subsequent data from one or more of the cameras indicates a change in position of the target relative to the motor vehicle, by repeating the determination of target location, selection of the cluster and variance to illumination provided to the target, relative to the laterally adjacent areas, based on the subsequent data.
73	The illuminating device of claim. 72, wherein: the variation of illumination provided to the target includes variation in at least one of color or intensity at least a change of at least one LED of the selected cluster to a non-emitting state; the cluster includes a plurality of the LEDs and the cluster includes non-contiguous LEDs; the light directed at the target is determined based at least in part on known directionality of light emitted by the first cluster exiting/ram the at least one headlamp; and

	at least one of the first data or the subsequent data includes image data.
74	The illuminating device of claim 72, wherein the memory further stores instructions that, when executed by one or more processors of the controller, enable the controller to: identity an upcoming road curvature along a road on which the motor vehicle is traveling; and accommodated the upcoming road curvature by adaptation of a light pattern of at least one of the headlamps.
75	The illuminating device of claim 74, wherein: the variation of illumination provided to the target includes variation in at least one of color or intensity or at least a change of at least one LED of the selected cluster to a non-emitting state the selected cluster includes a plurality of the LEDs and the selected cluster includes non-contiguous LEDs; the light directed at the target is determined based at least in part on known directionality of light emitted by the first cluster exiting/ram the at least one headlamp; and the memory further stores instructions that, when executed by one or more processors of the controller, enable the controller to accommodate road curvature by changing illumination in at least a direction of the road curvature by adaptation of the light pattern in at least one of color, intensity or spatial distribution by modification of light associated with one or more of the LEDs.
76	The illuminating device of claim 74, wherein the identification of the upcoming road curvature is based at least in part on map data and wherein the adaptation of the light pattern is based at least in part on the map data.
77	The illuminating device of claim 74, wherein the identification of the upcoming road curvature is based at least in part on sensor data provided by one or more of the sensors of the vehicle and wherein the adaptation of the light pattern is based at least in part on the sensor data.
78	The illuminating device of claim 72, further including one or more optical control elements to control light emitted from one or more of the LEDs.
79	The illuminating device of claim 78 wherein the optical control elements include at least one of one or more reflectors, refractors or lenses.

80.P	An illuminating device having automatic control of light provided to an illuminated area comprising:
80.1	a structure for incorporating illuminating device elements, wherein the structure comprises a motor vehicle;
80.2	a plurality of individually controllable LEDs incorporated in the structure via at least one headlamp mounted to the structure, each headlamp including at least one of the LEDs, the LEDs in communication with a power source;
80.3	electronic circuitry apparatus for the controlled powering of the LEDs and other of the illuminating device elements;
80.4	one or more processors;
80.5	one or more sensors, including one or more cameras, place on the structure or detecting coordinate-specific information about the illuminated area and positioned to capture camera data indicating a target ahead of the motor vehicle, at least one of said cameras in communication with power, and in communication with at least one of the one or more processors;
80.6	a controller, including at least one of the one or more processors, integrated with the structure via mounting, in communication with the LED controlling power electronic circuitry apparatus, said controller arranged to process the information communicated from the cameras and to automatically control the light provided to the illuminated area; and
80.7	memory storing instructions that, when executed by one or more processors of the controller, enable the controller to:
80.8	identify, based on data received from one or more of the 30 sensors, a plurality of positions associated with the target as the target move relative to the motor vehicle; and
80.9	change, responsive to the positions associated with the target, first light associated with one or more LEDs aimed toward at least a portion of the target, relative to second light associated with other one or more of the LEDs aimed laterally adjacent the target on either side, as the target moves relative to the motor vehicle.
81	The illuminating device of claim 80, wherein: the data includes image data; the memory further stores instructions that when executed by one or more processors of the controller, enable the controller to select a first cluster of LEDs, associated with the first light, for the change, based at least in part on known aimings of the first light associated with the first cluster having a correlation to the at least the

	portion, the known aimings based at least in part on at least one of known directionality of light emitted by the first cluster or known directionality of light emitted by the first cluster exiting the headlamp; and the change to emission of one or more LEDs aimed to towards the at least the portion includes a change to intensity or color or a chance of a least one of the LEDs to a non-emitting state.
82	The illuminating device of claim 80, wherein the memory further stores instructions that, when executed by one or more processors of the controller, enable the controller to: identify an upcoming road curvature along a road on which the motor vehicle is traveling; and accommodate the upcoming road curvature by adaptation of a light pattern of least one of the at least one headlamps.
83	The illuminating device of claim 82, wherein: the change to emission of the one or more LEDs aimed towards the at least the portion includes a change to intensity or color or a change of at least one of the LEDs to a non-emitting state; the memory further stores instructions that when executed by one or more processors of the controller, enable the controller to select a first cluster of LEDs, associated with the first light, for the change, based at least in part on known aimings of the first light associated with the first cluster having a correlation to the at least the portion, the known aimings based at least in part on at least one of known directionality of light emitted by the first cluster or known directionality of light emitted by the first cluster exiting the headlamp; and the memory further stores instructions that when executed by one or more processors of the controller, enable the controller to accommodate the road curvature by changing illumination in at least a direction of the road curvature by adaptation of the light pattern in at least one of color, intensity or spatial distribution by modification of light associated with one or more of the LEDs.
84	The illuminating device or claim 82, wherein the identification of the upcoming road curvature is based at least in part on map data and wherein the adaptation of the light pattern is based at least in part on the map data.
85	The illuminating device of claim 82, wherein the identification of the upcoming road curvature is based at least in part on sensor data provided by one or more of the sensors of the vehicle and wherein the

	adaptation of the light pattern is based at least in part on the sensor data.
86	The illuminating device of claim 80, further including one or more optical control elements to control light emitted from one or more of the LEDs.
87	The illuminating device of claim 86, wherein the optical control elements include at least one of one or more reflectors, refractors or lenses.