(12) INTERNATIONAL APPLICATION PUBLISHED UNDER THE PATENT COOPERATION TREATY (PCT)

(19) World Intellectual Property Organization
International Bureau

(43) International Publication Date
3 February 2005 (03.02.2005)

PCT

(10) International Publication Number
WO 2005/009590 A2

(51) International Patent Classification[7]: B01D 53/02, B23P 19/04

(21) International Application Number: PCT/US2004/024151

(22) International Filing Date: 22 July 2004 (22.07.2004)

(25) Filing Language: English

(26) Publication Language: English

(30) Priority Data:
60/489,674 24 July 2003 (24.07.2003) US

(71) Applicant *(for all designated States except US)*: **THOMAS INDUSTRIES INC.** [US/US]; 1419 Illinois Avenue, Sheboygan, WI 53082 (US).

(72) Inventor; and
(75) Inventor/Applicant *(for US only)*: **BERNTSON, Bernard, R.** [US/US]; 12 Bear Lake ROad, North Muskegon, MI 49445 (US).

(74) Agent: **FRANZINI, John, D.**; Quarles & Brady LLP, 411 E. Wisconsin Avenue, Milwaukee, WI 53202 (US).

(81) Designated States *(unless otherwise indicated, for every kind of national protection available)*: AE, AG, AL, AM, AT, AU, AZ, BA, BB, BG, BR, BW, BY, BZ, CA, CH, CN, CO, CR, CU, CZ, DE, DK, DM, DZ, EC, EE, EG, ES, FI, GB, GD, GE, GH, GM, HR, HU, ID, IL, IN, IS, JP, KE, KG, KP, KR, KZ, LC, LK, LR, LS, LT, LU, LV, MA, MD, MG, MK, MN, MW, MX, MZ, NA, NI, NO, NZ, OM, PG, PH, PL, PT, RO, RU, SC, SD, SE, SG, SK, SL, SY, TJ, TM, TN, TR, TT, TZ, UA, UG, US, UZ, VC, VN, YU, ZA, ZM, ZW.

(84) Designated States *(unless otherwise indicated, for every kind of regional protection available)*: ARIPO (BW, GH, GM, KE, LS, MW, MZ, NA, SD, SL, SZ, TZ, UG, ZM, ZW), Eurasian (AM, AZ, BY, KG, KZ, MD, RU, TJ, TM), European (AT, BE, BG, CH, CY, CZ, DE, DK, EE, ES, FI, FR, GB, GR, HU, IE, IT, LU, MC, NL, PL, PT, RO, SE, SI, SK, TR), OAPI (BF, BJ, CF, CG, CI, CM, GA, GN, GQ, GW, ML, MR, NE, SN, TD, TG).

Published:
— *without international search report and to be republished upon receipt of that report*

For two-letter codes and other abbreviations, refer to the "Guidance Notes on Codes and Abbreviations" appearing at the beginning of each regular issue of the PCT Gazette.

(54) Title: OXYGEN CONCENTRATOR CONSTRUCTION, SUPPLY AND REPAIR

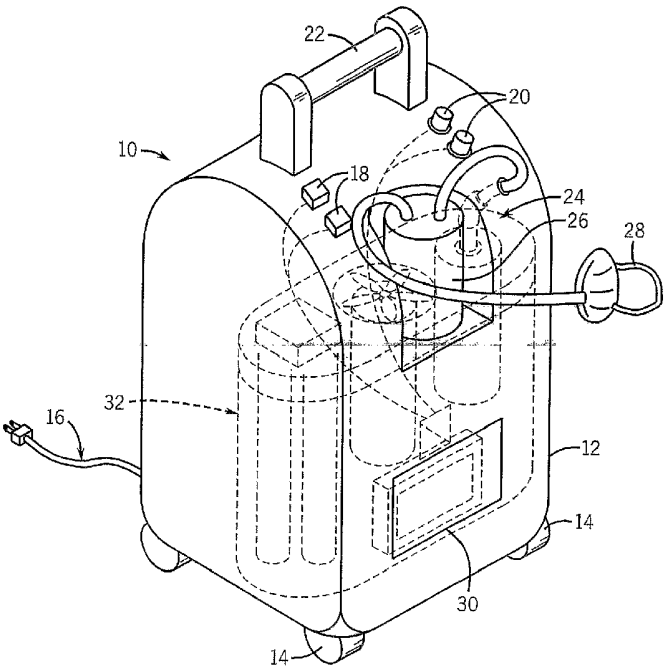

(57) Abstract: The pump, valve(s) and sieve beds of a medical oxygen concentrator are assembled into an oxygen rich air generator unit that is subsequently put together as a unit with other components of the oxygen concentrator to complete the concentrator.

WO 2005/009590 A2

OXYGEN CONCENTRATOR CONSTRUCTION, SUPPLY AND REPAIR

CROSS-REFERENCE TO RELATED APPLICATION

[0001] This claims the benefit of U.S. Provisional Patent Application No. 60/489,674 filed July 24, 2003.

STATEMENT CONCERNING FEDERALLY SPONSORED RESEARCH OR DEVELOPMENT

[0002] Not applicable.

FIELD OF THE INVENTION

[0003] This invention relates to oxygen concentrators, and in particular to medical oxygen concentrators for delivering a flow of oxygen enriched air to a patient.

BACKGROUND OF THE INVENTION

[0004] Medical oxygen concentrators are in widespread usage by patients who require oxygen-rich air as part of their treatment. These oxygen concentrators are sold by a variety of manufacturers and with different models offered by each manufacturer which differ in features and price. Each medical oxygen concentrator is similar to the next, however, in that each produces medical oxygen enriched air using certain common components.

[0005] Typically, medical oxygen concentrator manufacturers have obtained the common components from the manufacturers of these components and assembled them together as individual parts into their oxygen concentrator. The mating of these components to one another to efficiently generate medical oxygen enriched air for patient use has required considerable technical expertise and recurring problems have arisen each

GCE - Exhibit 1006, Page 2
GCE Gas Control Equipment Inc. v. VBOX, Inc.
IPR2023-00326

time a new medical oxygen concentrator model is introduced. In addition, servicing medical oxygen concentrators can be difficult as mis-diagnoses of the problem are common, with consequent wasting of time and materials. Therefore, a need exists for a different way of constructing and repairing an oxygen concentrator.

SUMMARY OF THE INVENTION

[0006] The invention provides such a way by providing an oxygen concentrator with a separate oxygen-rich air generator unit. The oxygen-rich air generator unit is made as a separate unit that can be manufactured upstream in commerce from the oxygen concentrator manufacturer. The oxygen-rich air generator unit can therefore be optimized for efficient usage in many different oxygen concentrators.

[0007] The invention provides a new construction of a medical oxygen concentrator that includes an oxygen-rich air generator unit and a new method of constructing medical oxygen concentrators, in particular, a method that includes making an oxygen concentrator using an oxygen-rich air generator unit. The invention also provides a new method of supplying medical oxygen concentrator manufacturers with components for their products, and of repairing medical oxygen concentrators by replacing the oxygen rich air generator as a unit.

[0008] The foregoing and other objects and advantages of the invention will be apparent from the detailed description and drawings.

BRIEF DESCRIPTION OF THE DRAWINGS

[0009] Fig. 1 is a perspective schematic view of an oxygen concentrator of the invention; and

GCE - Exhibit 1006, Page 3
GCE Gas Control Equipment Inc. v. VBOX, Inc.
IPR2023-00326

[0010] Fig. 2 is a perspective schematic view of an oxygen-rich air generator for the oxygen concentrator of Fig. 1.

DETAILED DESCRIPTION OF THE PREFERRED EMBODIMENTS

[0011] Fig. 1 illustrates an oxygen concentrator 10 of the invention. The oxygen concentrator 10 includes a housing or cabinet 12, which may be insulated for sound attenuation or include other elements such as vibration isolators or vibration cancellation components. The cabinet 12 would be unique to a particular model or brand of oxygen concentrator, and would be provided by an oxygen concentrator manufacturer. The cabinet 12 may have wheels 14 for easy mobility of the concentrator 10, a power cord 16 for plugging into a wall outlet, switches 18 for operating the concentrator, controls 20 such as a pressure or flow regulator, a pressure or flow meter (circular illustrated but may be a tube type) or other adjustment or monitoring devices or displays for adjusting the concentrator to desired operation levels or monitoring it, a handle 22, and a patient delivery system 24 that may include a humidification bottle 26 and a hose and mask or canula 28 which directly interfaces with the patient. The oxygen concentrator 10 may also have a service access port 30 and would have an oxygen-rich air generator (ORAG) unit 32 as further described below.

[0012] The ORAG 32 has a chassis 34 that is separate from the cabinet 12 of the oxygen concentrator 10 and is mounted inside of the cabinet 12, for example by being bolted, screwed, clamped, banded or otherwise removably fastened to the cabinet 12. The chassis 34 mounts the components of the ORAG 32. These components include a pump 36 and adsorbent containers 42 in which sieve beds are contained. The pump 32 may include a compressor, a motor to drive the compressor, and an isolation/vibration

GCE - Exhibit 1006, Page 4
GCE Gas Control Equipment Inc. v. VBOX, Inc.
IPR2023-00326

and sound attenuation system. Inlet air for the pump 36 is preferably provided through inlet filtration 44, and a valve system 46 for switching the flow of the pump 36 between the adsorbent containers 42 is also mounted to the chassis 34. The adsorbent containers 42 are in selective fluid communication with the inlet and/or outlet of the pump 36 via tubing or other connections with the valve system 46, as is well-known. A cooling fan 48 is preferably provided to cool the components of the ORAG 32 and a power and electrical control connector 50 is provided mounted to the chassis 34 to easily make power and electrical control connections with the controls 20 and switches 18 of the oxygen concentrator 10.

[0013] As different oxygen concentrator manufacturers may prefer to control the valve(s) 46 differently, the particular algorithm or control system for controlling the valve(s) may be included as part of the oxygen concentrator 10, separate from the ORAG 32. Providing the connection 50 on the ORAG 32 enables each oxygen concentrator manufacturer to use their own control system or control algorithm to control how the adsorbent containers 42 interface with the pump 36.

[0014] The ORAG 32 also preferably includes an oxygen-rich air tank 54 which is connected directly or indirectly to the output of the adsorbent containers 42 and an oxygen-rich air outlet 56 that can be connected to the patient delivery system 24.

[0015] The pump 36 may be a compressor and/or a vacuum pump, depending upon the mode of operation of the ORAG 32. Any suitable mode of operation may be used, and these modes are well-known. The ORAG 32 may also include a motor control system for controlling the pump motor and could also include control systems for

GCE - Exhibit 1006, Page 5
GCE Gas Control Equipment Inc. v. VBOX, Inc.
IPR2023-00326

controlling the valve(s) which connect the pump inlet and/or outlet to the adsorbent beds, and could also include a control system for the cooling fan.

[0016] The electrical control connections 50 of the ORAG 32 to the other components of oxygen concentrator 10 permit the use of sensors within the ORAG 32 to provide feedback to controls or indicators of the oxygen concentrator 10 outside of the chassis 34, as well as to provide power and control inputs to the ORAG 32. The ORAG 32 may also include an exhaust air cooling system for the pump 36. The adsorbent containers 42 include the sieve beds and a retention and filtration system as are well-known. The oxygen concentrator 10, outside of the ORAG 32, may include electrical switches, flow controls, control panels and displays, flow indicator displays, and flow regulation controls. Apart from the ORAG 32, the oxygen concentrator 10 would also preferably include sound attenuation insulation or devices, a wiring harness to connect the other components of the oxygen concentrator 10 to the ORAG 32, a power cord, and pneumatic hose connections to the ORAG 32.

[0017] Some components could be provided either as part of the ORAG 32 or not. For example, if an oxygen concentrator manufacturer wanted to use its own control system for controlling the valve(s) that switch the pump outlet/inlet between the adsorbent containers, these controls would be provided as part of the oxygen concentrator 10 outside from the ORAG 32. However, these controls could be provided as a standard part of the ORAG 32, or an oxygen concentrator manufacturer's custom controls could be provided as part of the ORAG 32 for the particular manufacturer.

[0018] To make the ORAG 32, many different constructions are possible. For example, any type of pump could be used, i.e., a linear pump, a wobble piston pump, a

GCE - Exhibit 1006, Page 6
GCE Gas Control Equipment Inc. v. VBOX, Inc.
IPR2023-00326

reciprocating pump, an axial pump, or any other structure capable of producing a gas flow at the required pressures could be used. Also, any number of sieve beds could be used, and any suitable control system could be used to control the adsorption and desorption of them. It may also be desirable to integrate components formerly considered separate. For example, the sieve bed control valve(s) could be integrated into the head or cap of the pump chamber, the sieve beds may be incorporated into the pump housing, the pump cylinder or housing may be the mounting structure or chassis for one or more other components, the pump housing may double as an accumulation tank for oxygen rich gas delivery to a patient and/or as a humidification chamber, etc. Therefore, as used herein, "connected" means integrally connected or connected with fasteners, adhesives, welding, or any other permanent, semi-permanent, or removable means, and includes direct and indirect connections.

[0019] One aspect of the invention is that for maintenance or service of the oxygen concentrator, the ORAG 32 is replaceable as a unit. This simplifies maintenance and repair, as the ORAG 32 only needs to be disconnected from the cabinet 12 and from the components 18, 20 and 26 that are mounted to the cabinet 12, and replaced with a new or reconditioned ORAG 32. Service personnel do not have to diagnose the ORAG 32 and repair it, nor inventory replacement parts for the ORAG 32. The ORAG 32 removed from the cabinet 12 is simply taken back or shipped to a central repair facility or to the manufacturer of the ORAG 32 and repaired, replaced or reconditioned there.

[0020] Preferred embodiments of the invention have been described in considerable detail. Many modifications and variations to the preferred embodiments

GCE - Exhibit 1006, Page 7
GCE Gas Control Equipment Inc. v. VBOX, Inc.
IPR2023-00326

described will be apparent to persons of ordinary skill in the art. Therefore, the invention should not be limited to the embodiments described.

GCE - Exhibit 1006, Page 8
GCE Gas Control Equipment Inc. v. VBOX, Inc.
IPR2023-00326

We Claim:

1. A method of making a medical oxygen concentrator for delivering a flow of oxygen enriched air to a patient, comprising the steps of:

making an oxygen rich air generator unit to produce oxygen enriched air from atmospheric air, including:

a mounting structure;

a compressor connected to the mounting structure;

one or more valves in communication with the compressor and connected to the mounting structure; and

one or more sieve beds in selective communication with the compressor by way of the one or more valves and connected to the mounting structure; and

providing a concentrator cabinet, the cabinet mounting one or more components selected from the group consisting of a flow meter, a flow regulator, a patient gas delivery device and a control panel; and

mounting the oxygen rich air generator unit to the concentrator cabinet and connecting the oxygen rich air generator to one or more of said components that are mounted to the concentrator cabinet.

2. A method of making a medical oxygen concentrator as claimed in claim 1, wherein the oxygen rich air generator includes an oxygen enriched air tank.

GCE - Exhibit 1006, Page 9
GCE Gas Control Equipment Inc. v. VBOX, Inc.
IPR2023-00326

3. A method of making a medical oxygen concentrator as claimed in claim 1, wherein the oxygen rich air generator is replaceable as a unit.

4. A method of repairing a medical oxygen concentrator, comprising the steps of:

unfastening from a cabinet of the oxygen concentrator an oxygen rich air generator unit that produces oxygen enriched air from atmospheric air, the oxygen rich air generator having a chassis and at least the following components mounted to the chassis: a pump, one or more valves and one or more sieve beds for producing oxygen enriched air;

removing the oxygen rich air generator unit from the cabinet;

placing a different oxygen rich air generator unit into the cabinet of the oxygen concentrator in place of the oxygen rich air generator unit that was removed from the cabinet; and

fastening the replacement oxygen rich air generator unit to the cabinet.

5. A method as claimed in claim 4, further comprising the step of repairing the removed oxygen rich air generator at a central repair facility that is at a location away from the location of the oxygen concentrator.

GCE - Exhibit 1006, Page 10
GCE Gas Control Equipment Inc. v. VBOX, Inc.
IPR2023-00326

6. A method of doing business in the field of supplying medical oxygen concentrator manufacturers with components for making medical oxygen concentrators, comprising the steps of supplying to the manufacturer an oxygen rich air generator unit having two or more oxygen concentrator components selected from the group consisting of a pump, one or more sieve beds, one or more valves, an exhaust cooling system and a pump cooling system assembled into the oxygen rich air generator unit, the oxygen rich air generator unit to be received by the oxygen concentrator manufacturer and mounted by the oxygen concentrator manufacturer as a unit to a cabinet of the oxygen concentrator.

7. A method of doing business as claimed in claim 6, wherein the oxygen rich air generator unit is connected by the oxygen concentrator manufacturer to one or more other components selected from the group consisting of a flow meter, a flow regulator, a patient gas delivery device and a control panel.

GCE - Exhibit 1006, Page 11
GCE Gas Control Equipment Inc. v. VBOX, Inc.
IPR2023-00326

FIG. 1

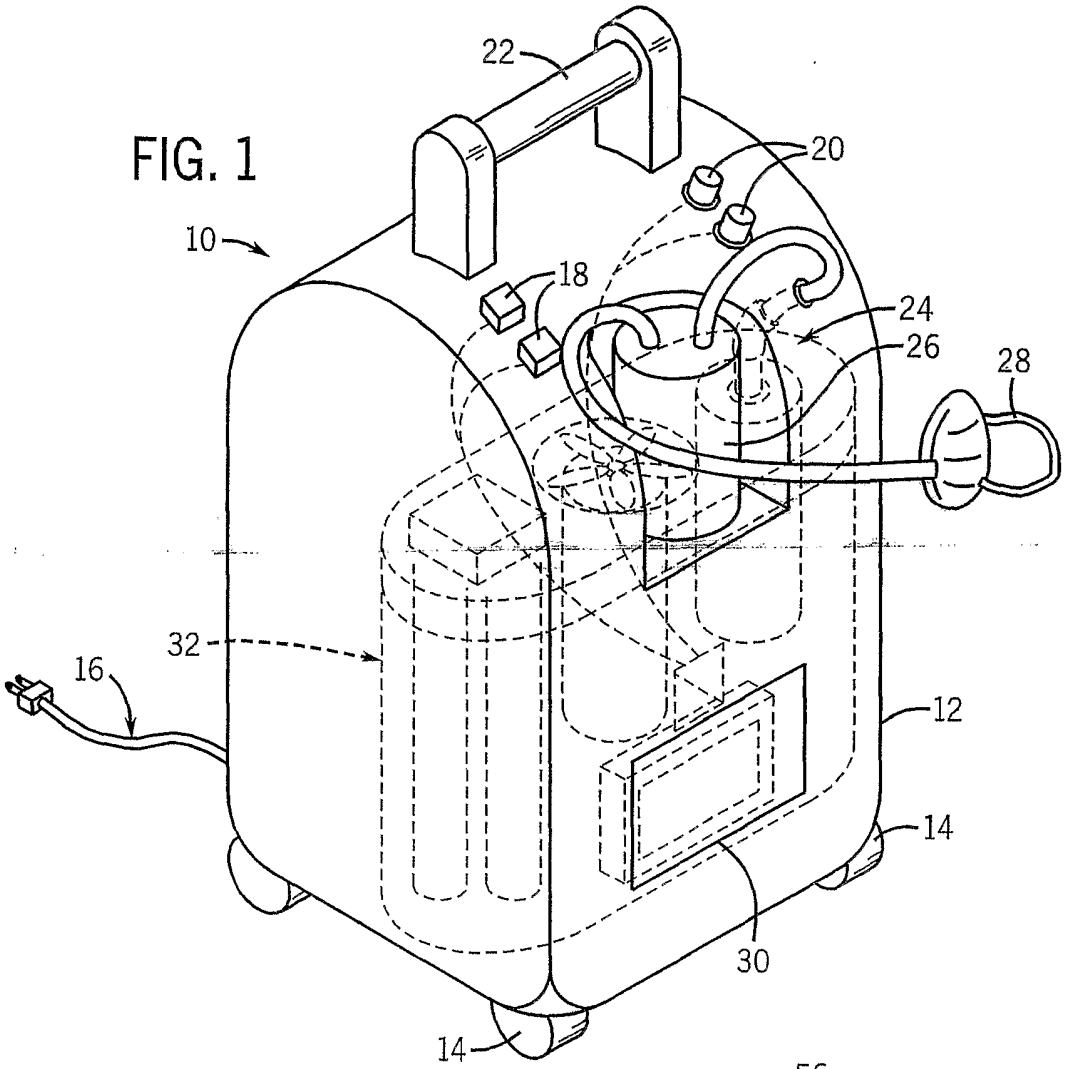
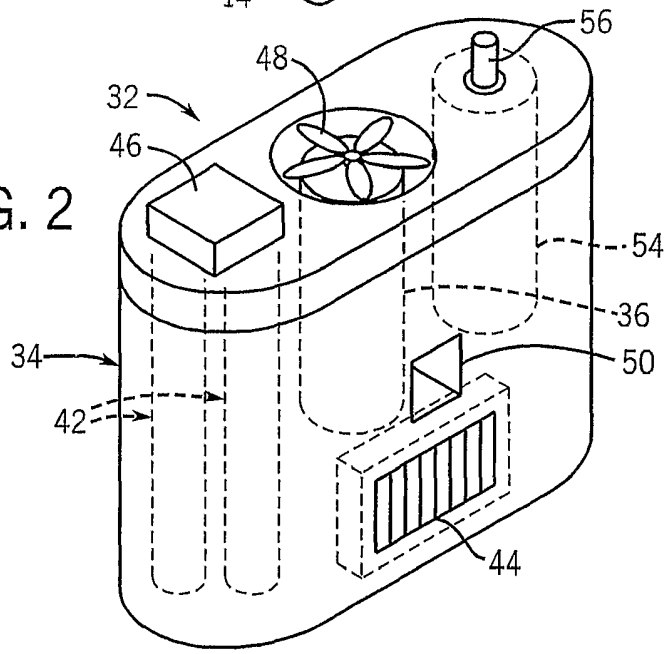
FIG. 2