US011389614B2

(12) **United States Patent**
Jagger et al.

(10) **Patent No.: US 11,389,614 B2**
(45) **Date of Patent: *Jul. 19, 2022**

(54) **REMOVABLE CARTRIDGE FOR OXYGEN CONCENTRATOR**

(71) Applicant: **Vbox, Incorporated**, White Bear Lake, MN (US)

(72) Inventors: **Theodore W. Jagger**, White Bear Lake, MN (US); **Nicholas P. Van Brunt**, White Bear Lake, MN (US); **John A. Kivisto**, Oak Grove, MN (US); **Perry B. Lonnes**, White Bear Lake, MN (US)

(73) Assignee: **Vbox, Incorporated**, White Bear Lake, MN (US)

(*) Notice: Subject to any disclaimer, the term of this patent is extended or adjusted under 35 U.S.C. 154(b) by 314 days.

This patent is subject to a terminal disclaimer.

(21) Appl. No.: **15/931,716**

(22) Filed: **May 14, 2020**

(65) **Prior Publication Data**

US 2020/0269004 A1 Aug. 27, 2020

Related U.S. Application Data

(63) Continuation of application No. 14/193,504, filed on Feb. 28, 2014, now Pat. No. 10,702,669, which is a

(Continued)

(51) **Int. Cl.**
B01D 53/02 (2006.01)
A61M 16/10 (2006.01)

(Continued)

(52) **U.S. Cl.**
CPC ***A61M 16/101*** (2014.02); ***A61M 16/10*** (2013.01); ***A62B 19/00*** (2013.01);

(Continued)

(58) **Field of Classification Search**
CPC .. A61M 2202/0208; A61M 2202/0007; A61M 16/0666; A61M 16/10;

(Continued)

(56) **References Cited**

U.S. PATENT DOCUMENTS

3,121,625 A 2/1964 Broughton
3,236,028 A 2/1966 Rutan

(Continued)

FOREIGN PATENT DOCUMENTS

EP 368649 A1 5/1990
EP 760247 A2 3/1997

(Continued)

OTHER PUBLICATIONS

US 10,265,491 B2, 04/2019, Allum et al. (withdrawn)

(Continued)

Primary Examiner — Christopher P Jones
(74) *Attorney, Agent, or Firm* — Carlson, Gaskey & Olds, P.C.

(57) **ABSTRACT**

A removable gas separation cartridge includes a housing having an inlet port, an outlet port, and a bed of adsorbent material. The cartridge is removable from an oxygen concentrator which separates oxygen from ambient air by using an absorption process.

16 Claims, 19 Drawing Sheets

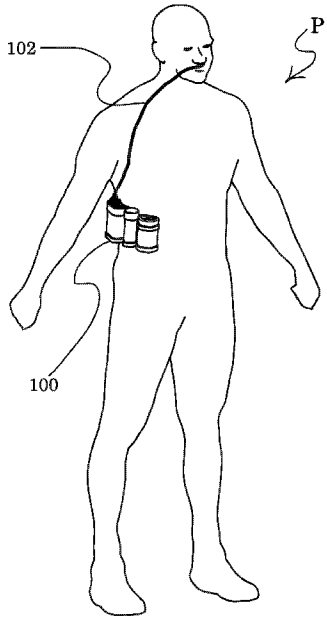

Related U.S. Application Data

continuation of application No. 13/795,977, filed on Mar. 12, 2013, now abandoned, which is a continuation of application No. 13/096,362, filed on Apr. 28, 2011, now abandoned, which is a continuation of application No. 11/054,341, filed on Feb. 9, 2005, now Pat. No. 7,954,490.

(51) **Int. Cl.**
A62B 19/00 (2006.01)
B01D 53/047 (2006.01)
A61M 16/06 (2006.01)

(52) **U.S. Cl.**
CPC ***B01D 53/0476*** (2013.01); *A61M 16/0666* (2013.01); *A61M 16/107* (2014.02); *A61M 2202/0208* (2013.01); *A61M 2202/03* (2013.01); *B01D 2259/455* (2013.01)

(58) **Field of Classification Search**
CPC A61M 16/101; A61M 16/107; A61M 2202/03; A62B 19/00; B01D 2259/455; B01D 53/0476
See application file for complete search history.

(56) **References Cited**

U.S. PATENT DOCUMENTS

3,717,974 A 2/1973 Batta
3,880,616 A 4/1975 Myers et al.
3,922,149 A 11/1975 Ruder et al.
4,169,715 A 10/1979 Eriksson
4,194,890 A 3/1980 McCombs et al.
4,222,750 A 9/1980 Gauthier et al.
4,263,018 A 4/1981 McCombs et al.
4,354,859 A 10/1982 Keller, II et al.
4,386,945 A 6/1983 Gardner
4,448,592 A 5/1984 Linde
4,449,990 A 5/1984 Tedford, Jr.
4,472,177 A 9/1984 Sircar
4,491,459 A 1/1985 Pinderton
4,502,873 A 3/1985 Mottram et al.
4,576,616 A 3/1986 Mottram et al.
4,584,001 A 4/1986 Dechene
4,627,860 A 12/1986 Rowland
4,648,395 A 3/1987 Sato et al.
4,648,888 A 3/1987 Rowland
4,673,415 A 6/1987 Stanford
4,681,099 A 7/1987 Sato et al.
4,684,377 A 8/1987 Haruna et al.
4,702,903 A 10/1987 Keefer
4,801,308 A 1/1989 Keefer
4,802,899 A 2/1989 Vrana et al.
4,813,977 A 3/1989 Schmidt et al.
4,816,121 A 3/1989 Keefer
4,826,510 A 5/1989 McCombs
4,880,443 A 11/1989 Miller et al.
4,892,566 A 1/1990 Bansal et al.
4,925,460 A 5/1990 Coe et al.
4,925,464 A 5/1990 Rabenau et al.
4,948,401 A 8/1990 Izumi et al.
4,968,329 A 11/1990 Keefer
4,971,609 A 11/1990 Pawlos
4,973,339 A 11/1990 Bansal
5,002,591 A 3/1991 Stanford
5,034,023 A 7/1991 Thompson
5,069,688 A 12/1991 Wells
5,071,449 A 12/1991 Sircar
5,082,473 A 1/1992 Keefer
5,084,075 A 1/1992 Sircar
5,096,469 A 3/1992 Keefer
5,112,367 A 5/1992 Hill
5,114,440 A 5/1992 Reiss
5,169,506 A 12/1992 Michaels
5,186,793 A 2/1993 Michaels
5,228,840 A 7/1993 Swank
5,247,826 A 9/1993 Frola et al.
5,256,172 A 10/1993 Keefer
5,266,102 A 11/1993 Gaffney et al.
5,268,021 A 12/1993 Hill et al.
5,268,023 A 12/1993 Kimer
5,275,642 A 1/1994 Bassine
5,328,503 A 7/1994 Kumar et al.
5,330,561 A 7/1994 Kumar et al.
5,340,381 A 8/1994 Vorih
5,366,541 A 11/1994 Hill et al.
5,370,112 A 12/1994 Perkins
5,411,578 A 5/1995 Watson et al.
5,415,683 A 5/1995 Leavitt
5,429,666 A 7/1995 Agrawal et al.
5,441,558 A 8/1995 Lee et al.
RE35,099 E 11/1995 Hill
5,469,372 A 11/1995 McBrearty et al.
5,474,595 A 12/1995 McCombs
5,487,775 A 1/1996 LaCava et al.
5,531,807 A 7/1996 McCombs
5,540,758 A 7/1996 Agrawal et al.
5,565,018 A 10/1996 Baksh et al.
5,578,115 A 11/1996 Cole
5,593,478 A 1/1997 Hill et al.
5,656,066 A 8/1997 Reiss et al.
5,656,067 A 8/1997 Watson et al.
5,672,195 A 9/1997 Moreau et al.
5,711,787 A 1/1998 Neill et al.
5,730,778 A 3/1998 Hill et al.
5,753,010 A 5/1998 Sircar et al.
5,762,686 A 6/1998 Borzio
5,772,737 A 6/1998 Andreani et al.
5,779,766 A 7/1998 Weigel et al.
5,797,979 A 8/1998 Quinn
5,814,130 A 9/1998 Lemcoff et al.
5,814,131 A 9/1998 Lemcoff et al.
5,820,656 A 10/1998 Lemcoff et al.
5,827,358 A 10/1998 Kulish et al.
5,858,062 A 1/1999 McCulloh et al.
5,871,564 A 2/1999 McCombs
5,882,380 A 3/1999 Sircar
5,891,217 A 4/1999 Lemcoff et al.
5,893,275 A 4/1999 Henry
5,893,944 A 4/1999 Dong
5,906,672 A 5/1999 Michaels et al.
5,917,135 A 6/1999 Michaels et al.
5,928,189 A 7/1999 Phillips et al.
5,931,159 A 8/1999 Suzuki et al.
5,935,297 A 8/1999 Amlinger
5,948,142 A 9/1999 Holmes et al.
5,968,236 A 10/1999 Bassine
5,979,440 A 11/1999 Honkonen et al.
5,985,001 A 11/1999 Garrett et al.
5,985,113 A 11/1999 Crome et al.
5,988,165 A 11/1999 Richet, II et al.
5,997,611 A 12/1999 Doong et al.
5,997,617 A 12/1999 Czabala et al.
6,010,555 A 1/2000 Smolarek et al.
6,017,315 A 1/2000 Starr et al.
6,030,435 A 2/2000 Monereau et al.
6,033,457 A 3/2000 Lawless
6,051,050 A 4/2000 Keefer et al.
6,056,804 A 5/2000 Keefer et al.
6,068,680 A 5/2000 Kulish et al.
6,093,379 A 7/2000 Golden et al.
6,096,115 A 8/2000 Kleinberg et al.
6,146,447 A 11/2000 Sircar et al.
6,152,134 A 11/2000 Webber et al.
6,156,101 A 12/2000 Naheiri
6,162,283 A 12/2000 Conrad et al.
6,171,371 B1 1/2001 Derive et al.
6,176,897 B1 1/2001 Keefer
6,183,538 B1 2/2001 Naheiri
6,212,904 B1 4/2001 Arkharov et al.
6,217,635 B1 4/2001 Conrad et al.
6,287,366 B1 9/2001 Derive et al.
6,290,759 B1 9/2001 Fenner et al.

(56) **References Cited**

U.S. PATENT DOCUMENTS

6,302,107	B1	10/2001	Richer, II et al.
6,311,719	B1	11/2001	Hill et al.
6,314,957	B1	11/2001	Boissin et al.
6,344,069	B2	2/2002	Smolarek et al.
6,346,139	B1	2/2002	Czabala
6,372,026	B1	4/2002	Takemasa et al.
6,425,938	B1	7/2002	Xu et al.
6,428,607	B1	8/2002	Xu et al.
6,432,170	B1	8/2002	Chiang et al.
6,446,630	B1	9/2002	Todd, Jr.
6,457,485	B2	10/2002	Hill et al.
6,461,410	B1	10/2002	Abe et al.
6,468,328	B2	10/2002	Sircar et al.
6,471,744	B1	10/2002	Hill
6,478,850	B1	11/2002	Warren
6,478,857	B2	11/2002	Czabala
6,511,526	B2	1/2003	Jagger et al.
6,520,176	B1	2/2003	Dubois et al.
6,521,143	B1	2/2003	Genkin et al.
6,524,370	B2	2/2003	Maheshwary et al.
6,544,318	B2	4/2003	Dee et al.
6,547,851	B2	4/2003	Warren
6,551,384	B1	4/2003	Ackley et al.
6,572,688	B2	6/2003	Irven et al.
6,576,043	B2	6/2003	Zwilling et al.
6,585,804	B2	7/2003	Kleinberg et al.
6,605,136	B1	8/2003	Graham et al.
6,629,525	B2	10/2003	Hill et al.
6,641,644	B2	11/2003	Jagger et al.
6,641,645	B1	11/2003	Lee et al.
6,651,653	B1	11/2003	Honkonen et al.
6,651,658	B1	11/2003	Hill et al.
6,658,894	B2	12/2003	Golden et al.
6,687,164	B2	1/2004	Honkonen et al.
6,691,702	B2	2/2004	Appel et al.
6,698,423	B1	3/2004	Honkonen et al.
6,712,087	B2	3/2004	Hill et al.
6,712,886	B2	3/2004	Kim
6,764,534	B2	7/2004	McCombs et al.
6,793,719	B2	9/2004	Kim et al.
6,802,889	B2	10/2004	Graham et al.
6,805,729	B2	10/2004	Lim et al.
6,811,590	B2	11/2004	Lee et al.
6,824,590	B2	11/2004	Dee et al.
6,866,041	B2	3/2005	Hardy, Jr. et al.
6,866,950	B2	3/2005	Connor et al.
6,878,186	B2	4/2005	Neary
6,908,503	B2	6/2005	McCombs et al.
6,935,460	B2	8/2005	McCombs et al.
D510,169	S	9/2005	Deane et al.
6,949,133	B2	9/2005	McCombs et al.
6,953,498	B2	10/2005	Walker et al.
6,959,728	B2	11/2005	McCombs et al.
7,011,092	B2	3/2006	McCombs et al.
7,011,898	B2	3/2006	Butt et al.
7,025,329	B2	4/2006	Winter
7,066,985	B2	6/2006	Deane et al.
7,066,986	B2	6/2006	Haben et al.
D528,212	S	9/2006	Conway et al.
7,105,038	B2	9/2006	Lee et al.
7,135,059	B2	11/2006	Deane et al.
7,156,903	B2	1/2007	McCombs
7,171,963	B2	2/2007	Jagger et al.
7,273,051	B2	9/2007	Whitley et al.
7,279,029	B2	10/2007	Occhialini et al.
7,285,154	B2	10/2007	Karwacki, Jr. et al.
7,291,271	B2	11/2007	Galbraith
7,329,304	B2	2/2008	Bliss et al.
7,350,521	B2	4/2008	Whitley et al.
7,368,005	B2	5/2008	Bliss et al.
7,390,350	B2	6/2008	Weist, Jr. et al.
7,402,193	B2	7/2008	Bliss et al.
7,425,231	B2	9/2008	Carolan et al.
7,431,032	B2	10/2008	Jagger et al.
7,438,745	B2	10/2008	Deane et al.
7,445,663	B1	11/2008	Hunter et al.
7,452,407	B2	11/2008	Golden et al.
7,455,717	B2	11/2008	Sprinkle
7,473,299	B2	1/2009	Occhialini et al.
7,491,040	B2	2/2009	McCombs et al.
7,500,490	B2	3/2009	Wagner
7,510,601	B2	3/2009	Whiley et al.
7,517,385	B2	4/2009	Winter
7,533,872	B2	5/2009	Lee et al.
7,585,351	B2	9/2009	Deane et al.
7,604,004	B2	10/2009	Jagger et al.
7,604,005	B2	10/2009	Jagger et al.
7,651,549	B2	1/2010	Whitley
7,686,870	B1	3/2010	Deane et al.
7,708,802	B1	5/2010	Deane et al.
7,713,421	B2	5/2010	Galbraith
7,717,981	B2	5/2010	LaBuda et al.
7,722,698	B2	5/2010	Thompson et al.
7,722,700	B2	5/2010	Sprinkle
7,730,887	B2	6/2010	Deane et al.
7,753,996	B1	7/2010	Deane et al.
7,758,672	B2	7/2010	Lee et al.
7,766,010	B2	8/2010	Jagger et al.
7,771,519	B2	8/2010	Carolan et al.
7,780,768	B2	8/2010	Taylor et al.
7,794,522	B2	9/2010	Bliss et al.
7,841,343	B2	11/2010	Deane et al.
7,857,894	B2	12/2010	Taylor et al.
7,866,315	B2	1/2011	Jagger et al.
7,879,138	B2	2/2011	Lee et al.
7,922,789	B1	4/2011	Deane et al.
7,947,118	B2	5/2011	Rarig et al.
3,016,918	A1	9/2011	LaBuda et al.
8,142,544	B2	3/2012	Taylor et al.
8,148,583	B2	4/2012	Underwood et al.
8,262,783	B2	9/2012	Stoner et al.
8,303,683	B2	11/2012	Boulet et al.
3,377,181	A1	2/2013	Taylor et al.
8,366,815	B2	2/2013	Taylor et al.
3,440,004	A1	5/2013	Taylor et al.
8,529,674	B2	9/2013	Lee et al.
8,568,519	B2	10/2013	Taylor et al.
8,580,015	B2	11/2013	Taylor et al.
8,603,220	B2	12/2013	Rarig et al.
D700,701	S	3/2014	Taylor et al.
8,702,841	B2	4/2014	Taylor et al.
D706,211	S	6/2014	Taylor et al.
8,753,426	B2	6/2014	Zheng et al.
8,858,689	B2	10/2014	Stoner et al.
9,101,872	B2	8/2015	Rarig et al.
9,199,190	B2	12/2015	Malik et al.
9,220,864	B2	12/2015	Taylor et al.
D749,220	S	2/2016	Taylor et al.
9,283,346	B2	3/2016	Taylor et al.
D770,608	S	11/2016	Allum et al.
9,592,360	B2	3/2017	Taylor et al.
9,669,349	B1	6/2017	Lau et al.
9,731,241	B2	8/2017	Kalbassi et al.
9,907,926	B2	3/2018	Allum
9,925,514	B2	3/2018	Coe et al.
9,995,645	B2	6/2018	Allum
D851,767	S	6/2019	Allum et al.
10,343,139	B2	7/2019	Bhadra et al.
10,384,028	B2	8/2019	Allum et al.
D860,459	S	9/2019	Burgess et al.
10,478,770	B2	11/2019	Sanderson et al.
D876,615	S	2/2020	Allum et al.
10,576,455	B2	3/2020	Weist, Jr. et al.
2003/0005928	A1	1/2003	Appel et al.
2003/0106430	A1	6/2003	Dee et al.
2003/0167924	A1	9/2003	McCombs et al.
2004/0103894	A1	6/2004	Loncar
2005/0072298	A1	4/2005	Deane et al.
2005/0072306	A1	4/2005	Deane et al.
2005/0072423	A1	4/2005	Deane et al.
2005/0072426	A1	4/2005	Deane et al.
2005/0103341	A1	5/2005	Deane et al.
2005/0257686	A1	11/2005	Occhialini et al.
2005/0274381	A1	12/2005	Deane et al.

(56) **References Cited**

U.S. PATENT DOCUMENTS

2006/0090759	A1	5/2006	Howes et al.
2006/0124128	A1	6/2006	Deane et al.
2006/0174871	A1	8/2006	Jagger et al.
2006/0174875	A1	8/2006	Jagger et al.
2006/0174877	A1	8/2006	Jagger et al.
2006/0174880	A1	8/2006	Jagger et al.
2006/0174881	A1	8/2006	Jagger et al.
2006/0230924	A1	10/2006	Deane et al.
2006/0230928	A1	10/2006	Seaton
2006/0283325	A1	12/2006	Sugano
2006/0292654	A1	12/2006	Reardon
2007/0056583	A1	3/2007	Jagger et al.
2007/0056584	A1	3/2007	Jagger et al.
2007/0289446	A1	12/2007	Occhialini et al.
2008/0000353	A1	1/2008	Rarig et al.
2008/0072907	A1	3/2008	Deane et al.
2008/0105258	A1	5/2008	Deane et al.
2008/0110338	A1	5/2008	Taylor et al.
2008/0168901	A1	7/2008	Carolan et al.
2008/0202337	A1	8/2008	Taylor et al.
2008/0282883	A1	11/2008	Rarig et al.
2009/0071333	A1	3/2009	LaBuda et al.
2009/0126736	A1	5/2009	Taylor et al.
2009/0131763	A1	5/2009	Taylor et al.
2010/0282084	A1	11/2010	Taylor et al.
2010/0294133	A1	11/2010	Lee et al.
2011/0023712	A1	2/2011	Rarig et al.
2011/0067566	A1	3/2011	Taylor et al.
2011/0271833	A1	11/2011	Tentarelli et al.
2011/0275866	A1	11/2011	Underwood et al.
2012/0167883	A1	7/2012	Taylor et al.
2012/0167886	A1	7/2012	Taylor et al.
2012/0167887	A1	7/2012	Taylor et al.
2012/0167888	A1	7/2012	Taylor et al.
2012/0266883	A1	10/2012	Taylor et al.
2013/0019752	A1	1/2013	Stoner et al.
2013/0269519	A1	10/2013	Taylor et al.
2013/0299023	A1	11/2013	Rarig et al.
2013/0305929	A1	11/2013	Malik et al.
2014/0033918	A1	2/2014	Zheng et al.
2014/0137741	A1	5/2014	Taylor et al.
2014/0353886	A1	12/2014	Thayer et al.
2015/0107585	A1	4/2015	Allum
2015/0107592	A1	4/2015	Allum
2015/0182720	A1	7/2015	Taylor et al.
2015/0250973	A1	9/2015	Allum et al.
2015/0360167	A1	12/2015	Kalbassi et al.
2016/0022950	A1	1/2016	Taylor et al.
2017/0113013	A1	4/2017	Allum
2017/0143926	A1	5/2017	Allum et al.
2017/0239640	A1	8/2017	Coe et al.
2017/0239641	A1	8/2017	Coe et al.
2017/0340851	A1	11/2017	Allum et al.
2017/0348501	A1	12/2017	Taylor et al.
2017/0361052	A1	12/2017	Taylor et al.
2018/0001048	A1	1/2018	Allum
2018/0200474	A1	7/2018	Allum et al.
2018/0200475	A1	7/2018	Allum et al.
2018/0364119	A1	12/2018	Allum
2019/0091651	A1	3/2019	Bhadra et al.
2019/0175860	A1	6/2019	Allum et al.
2019/0193018	A1	6/2019	Sanderson et al.
2019/0201835	A1	7/2019	Sanderson et al.
2019/0291078	A1	9/2019	Weist, Jr. et al.
2020/0054986	A1	2/2020	Whitley et al.
2020/0054987	A1	2/2020	Bhadra et al.
2020/0054988	A1	2/2020	Wagner et al.

FOREIGN PATENT DOCUMENTS

EP	860646	A2	8/1998
EP	0873776	A2	10/1998
EP	1125623	A1	8/2001
GB	2174922	A	11/1986
WO	9857727	A1	12/1998
WO	9858219	A1	12/1998
WO	9943416	A1	9/1999
WO	9943418	A1	9/1999
WO	3092817	A1	11/2003

OTHER PUBLICATIONS

Recommendations of the Fifth Oxygen Consensus Conference, 1999.

"AirSep lowers boom", www.hmenews.com/2004.12/depts/vendors/vendors1.htm, 2004.

Peter L Bliss, Robert W Mccoy, Alexander B Adams, A Bench Study Comparison of Demand Oxygen Delivery Systems and Continuous Flow Oxygen, Respiratory Care, Aug. 1999, vol. 44. No 8.

Inter Partes Reexamination Certificate (1210th) U.S. Pat. No. 7,841,343 C1, issued Dec. 7, 2015, Title: Systems and Methods for Delivering Therapeutic Gas to Patients, Inventor: Deane et al. Assignee: Inogen, Inc. Reexamination Request No. 95/001,885, filed Mar. 1, 2012.

Inter Partes Reexamination Certificate (1358th) U.S. Pat. No. 6,605,136 C1, issued Oct. 28, 2016, Title: Pressure Swing Adsorption Process Operation and Optimization, Inventor: Graham et al. Assignee: Inogen, Inc. Reexamination Request No. 95/001,886, filed May 2, 2012.

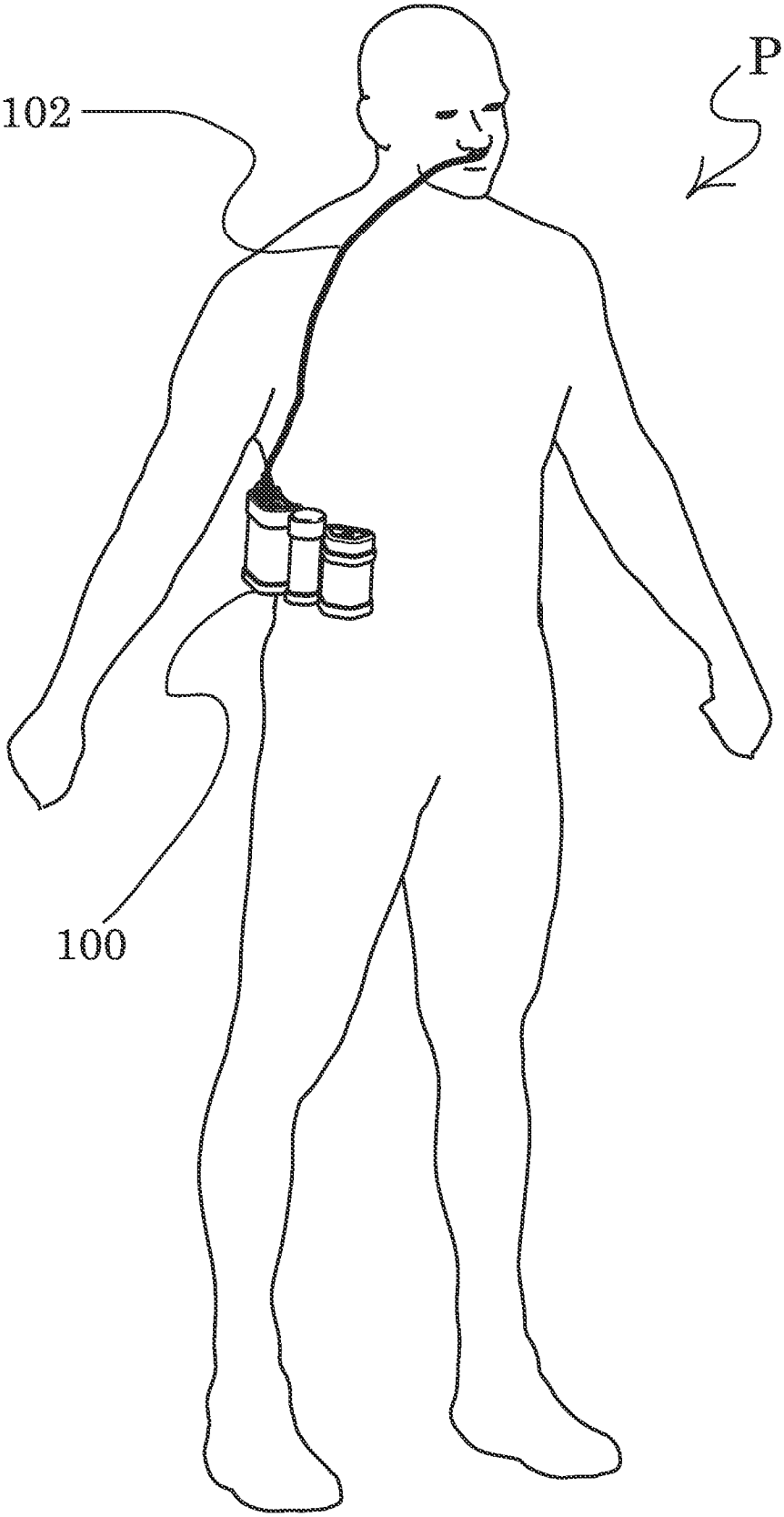

Fig 1

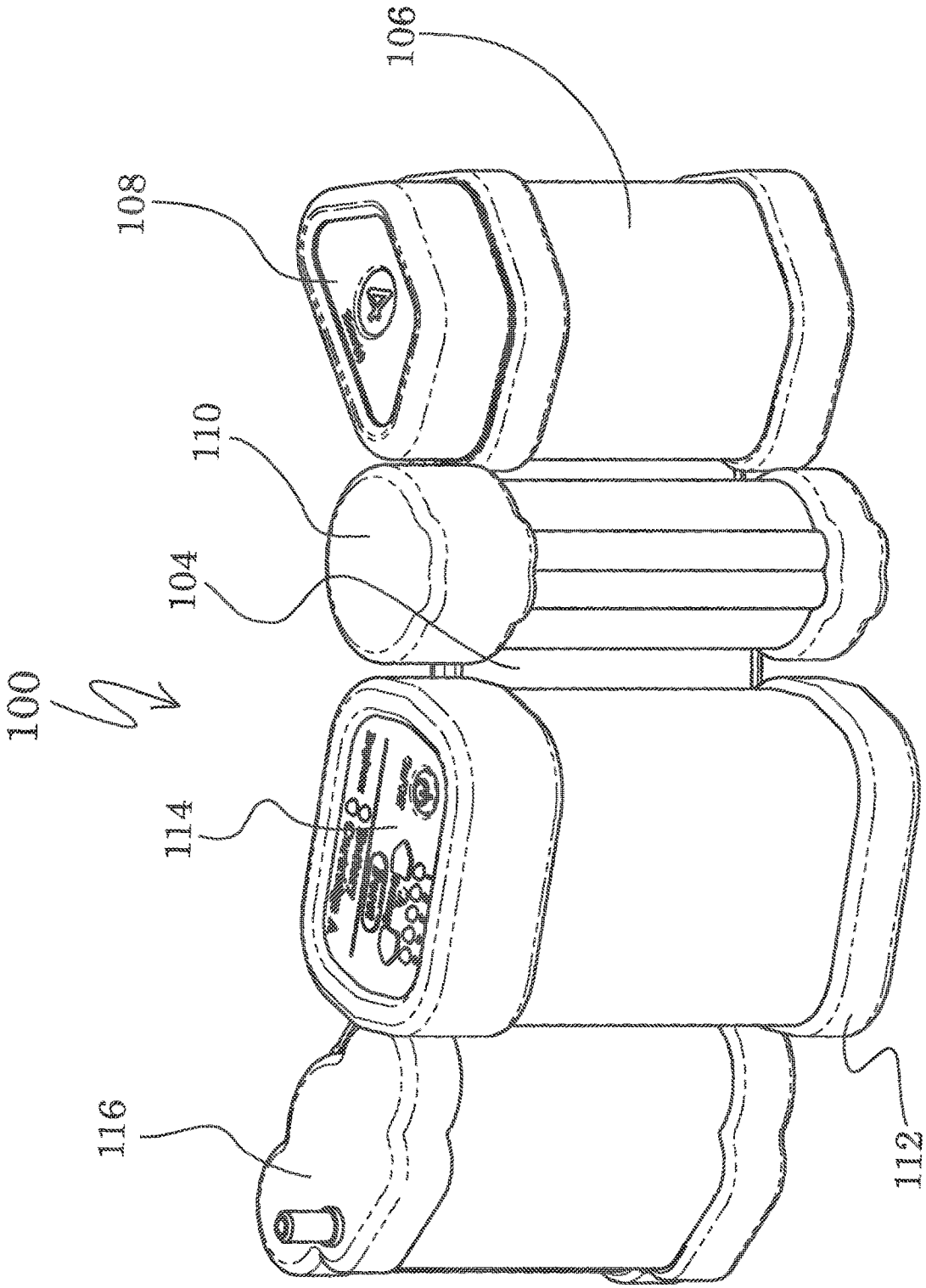

Fig 2

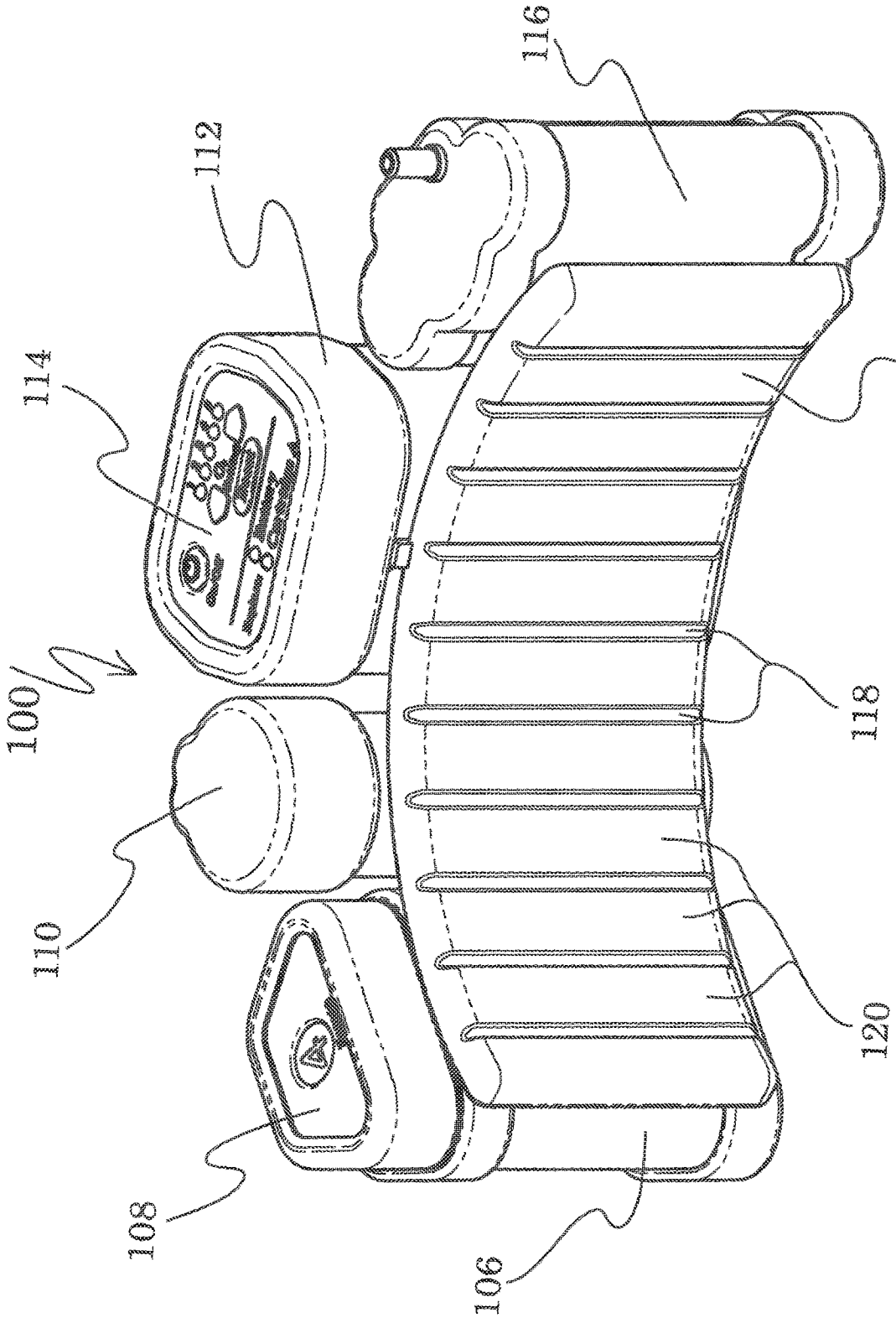

Fig 3

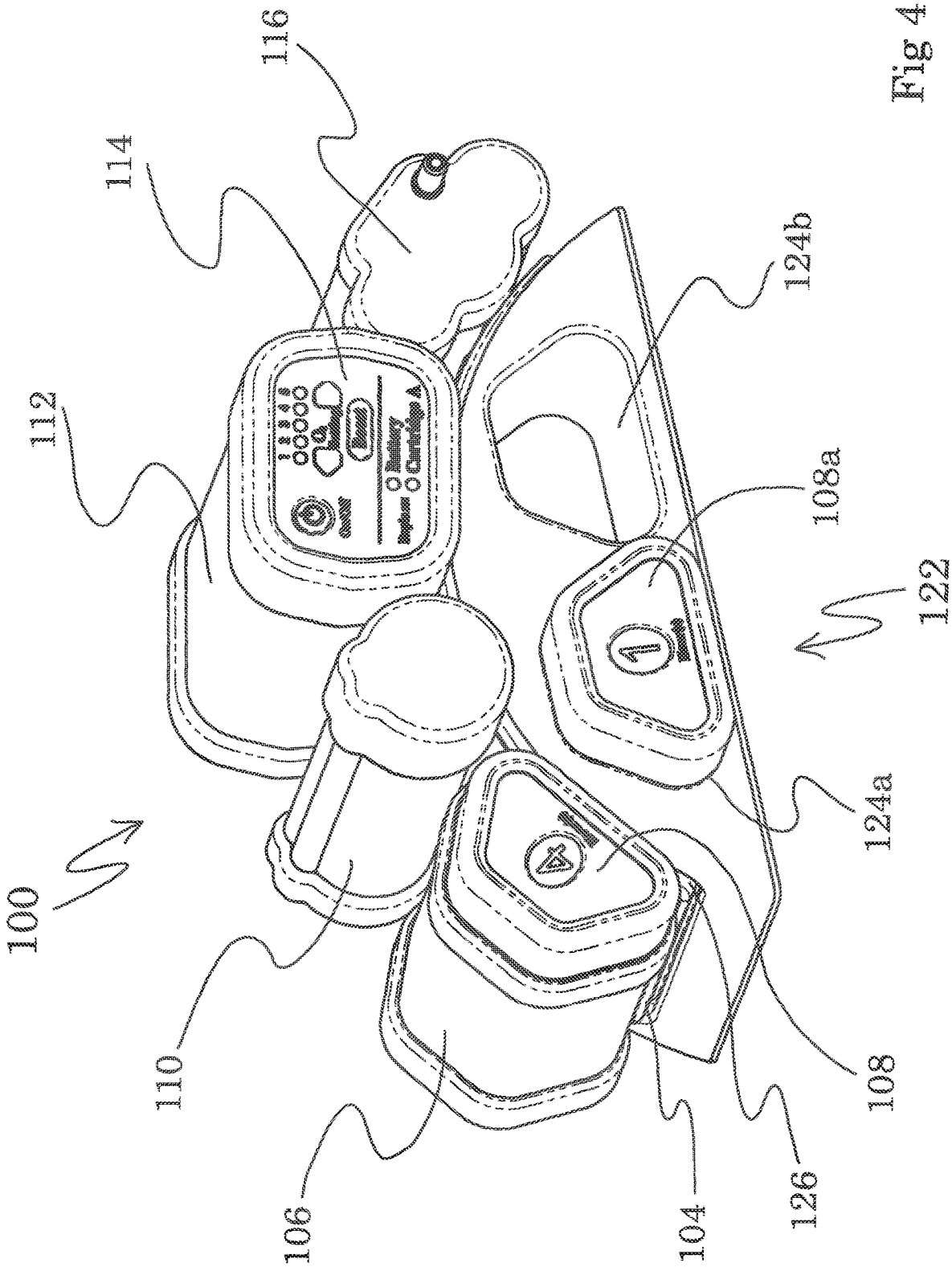

Fig 4

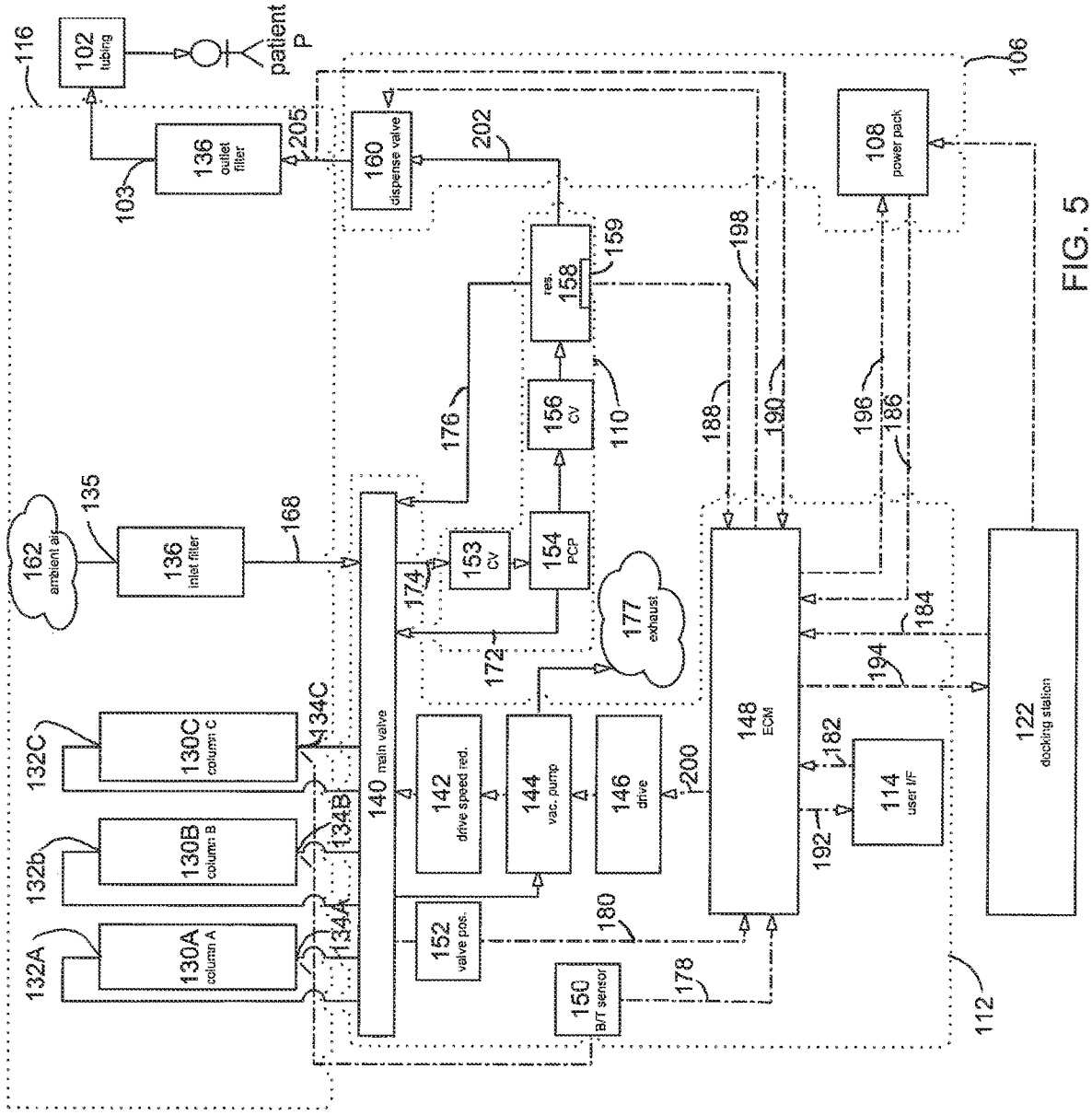

FIG. 5

GCE - Exhibit 1001, Page 9
GCE Gas Control Equipment Inc. v. VBOX, Inc.
IPR2023-00326

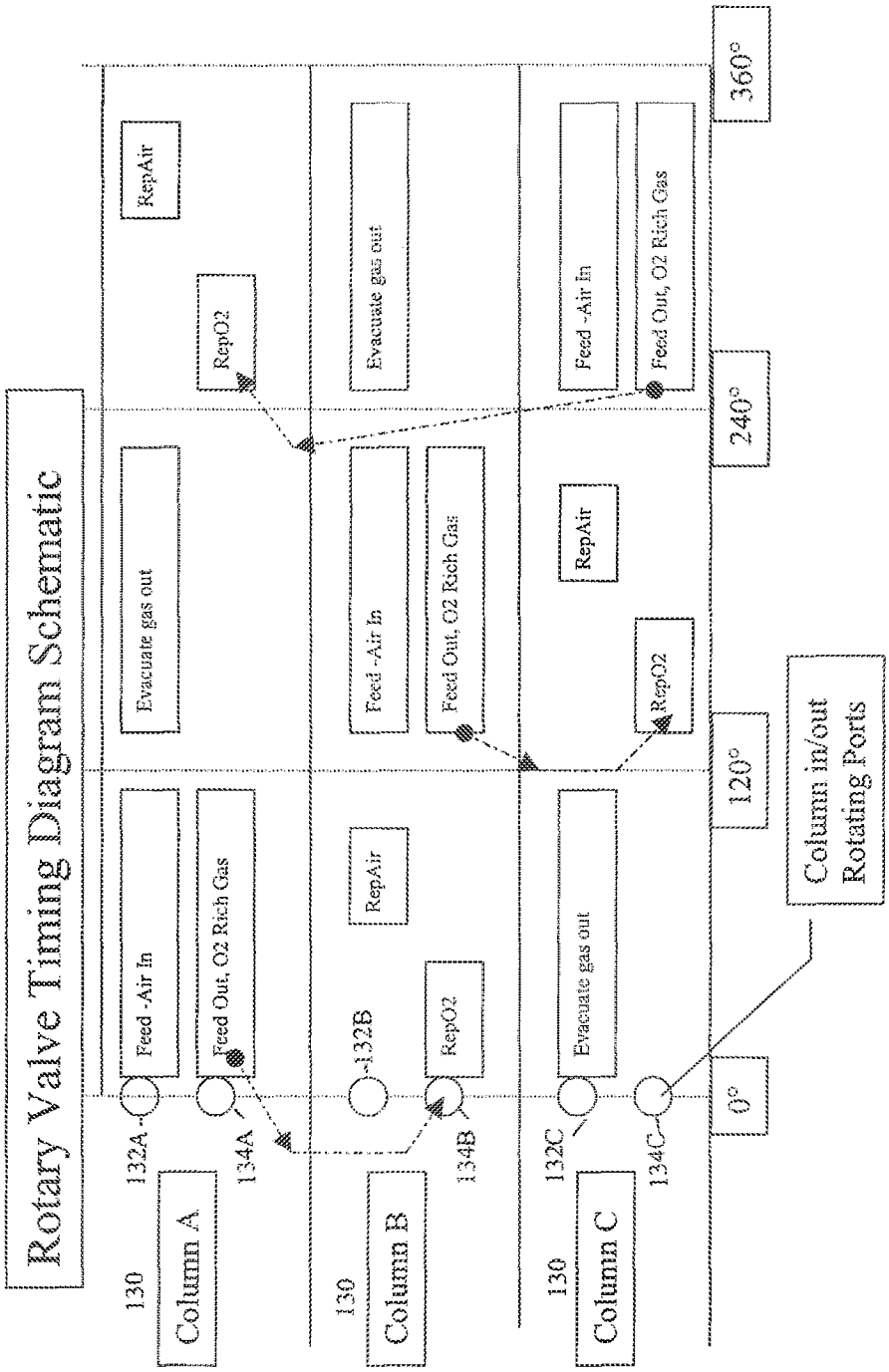

FIG. 6

GCE - Exhibit 1001, Page 10
GCE Gas Control Equipment Inc. v. VBOX, Inc.
IPR2023-00326

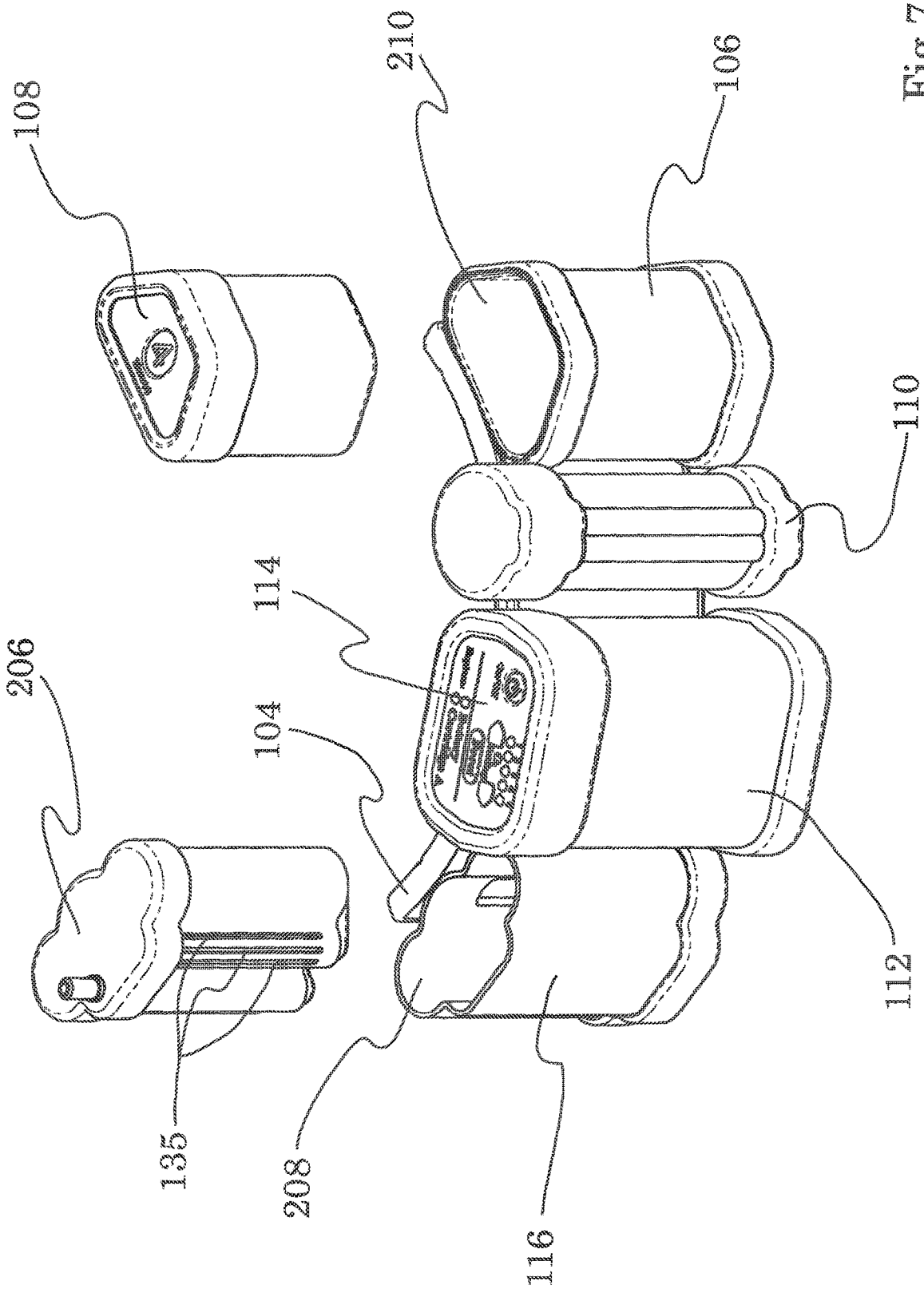

Fig 7

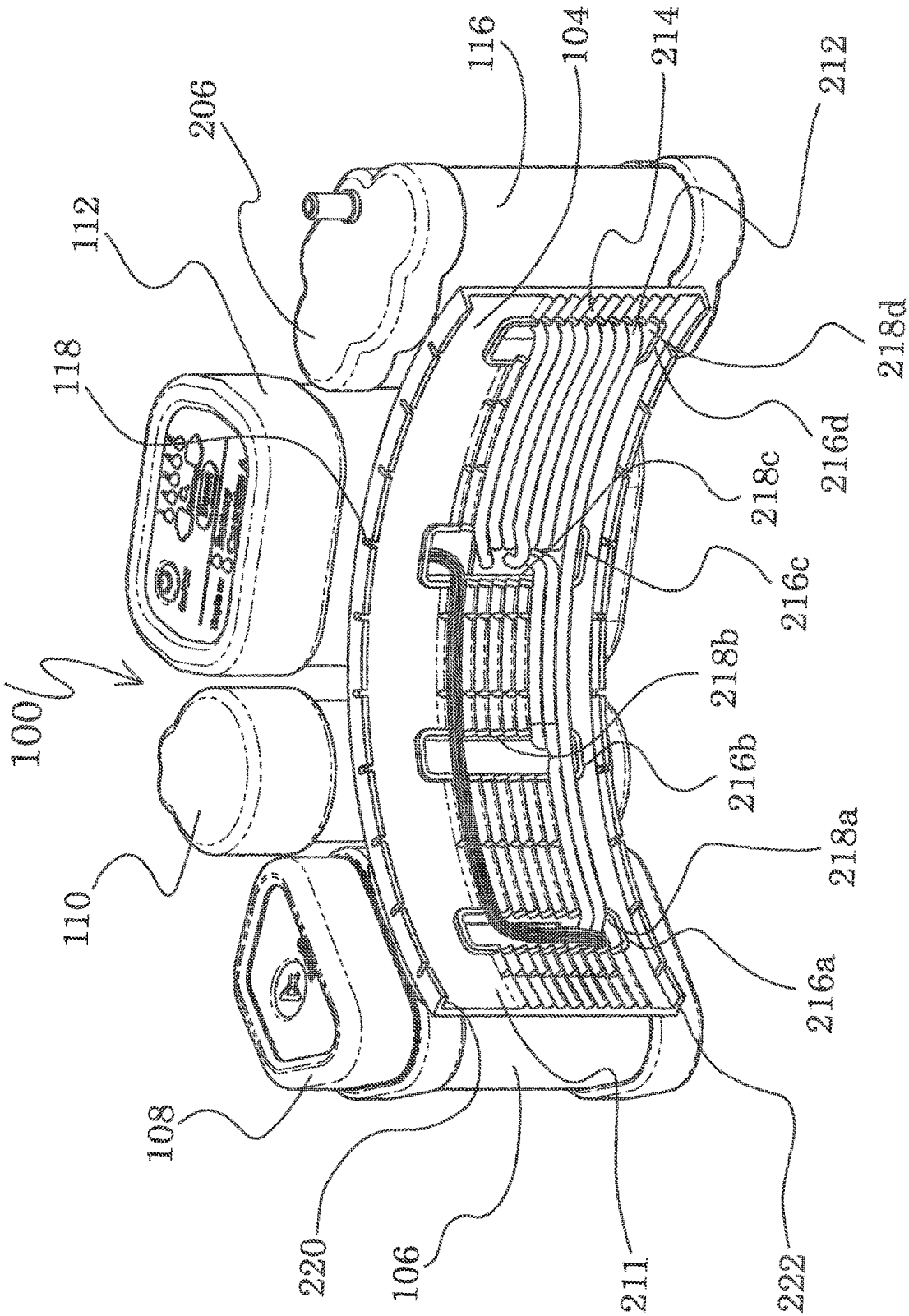

Fig 8

GCE - Exhibit 1001, Page 12
GCE Gas Control Equipment Inc. v. VBOX, Inc.
IPR2023-00326

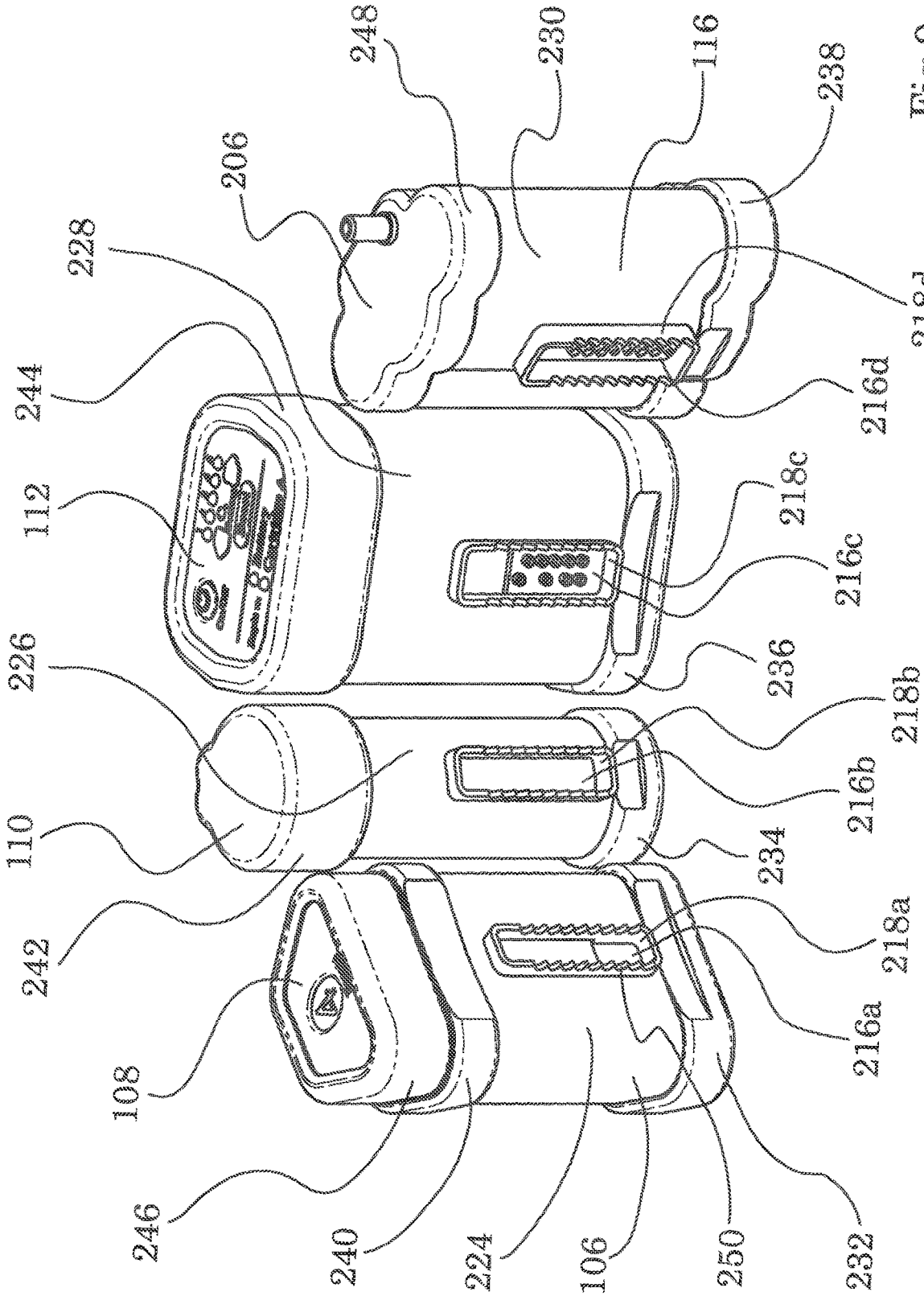

Fig 9

GCE - Exhibit 1001, Page 13
GCE Gas Control Equipment Inc. v. VBOX, Inc.
IPR2023-00326

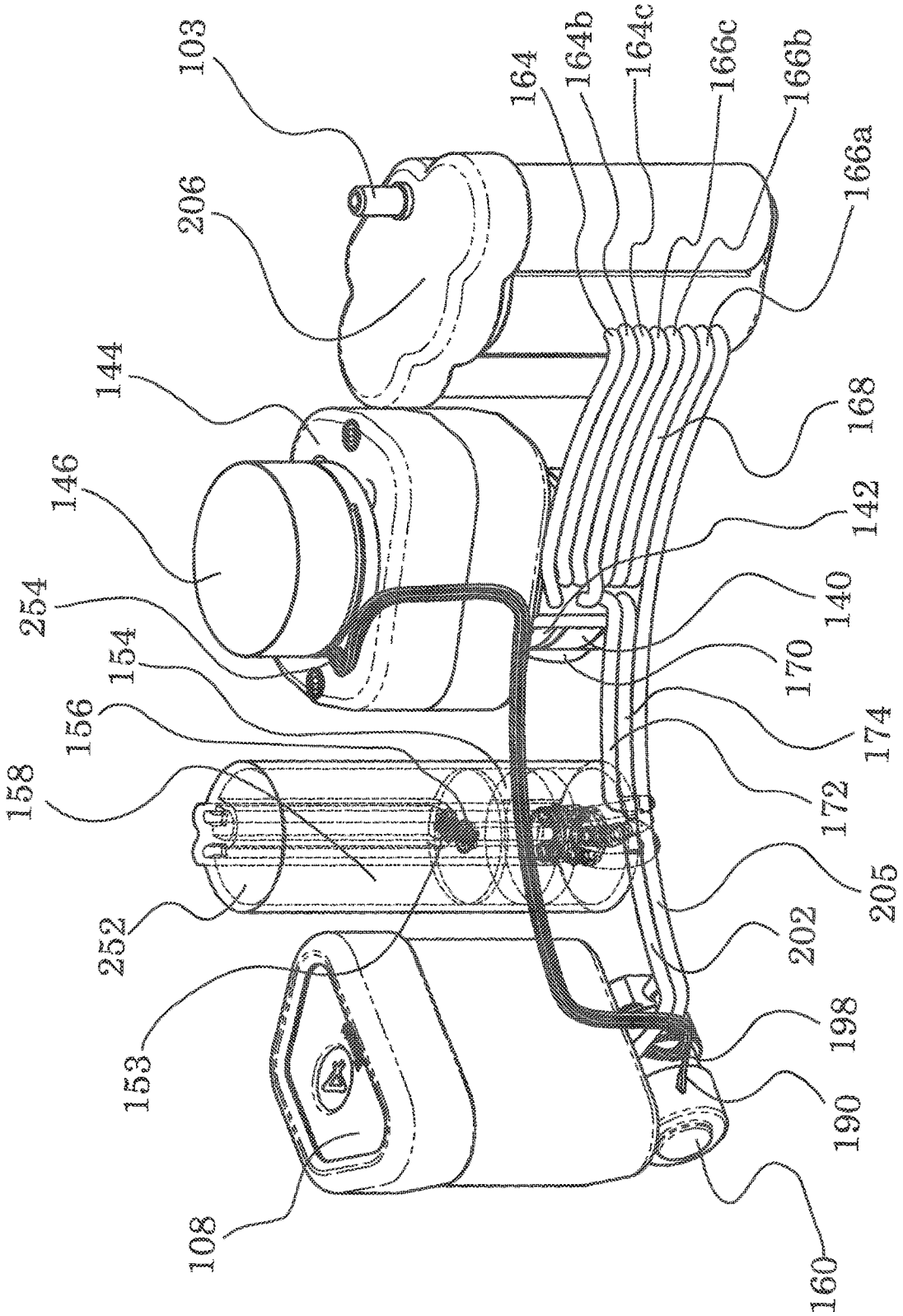

Fig 10

GCE - Exhibit 1001, Page 14
GCE Gas Control Equipment Inc. v. VBOX, Inc.
IPR2023-00326

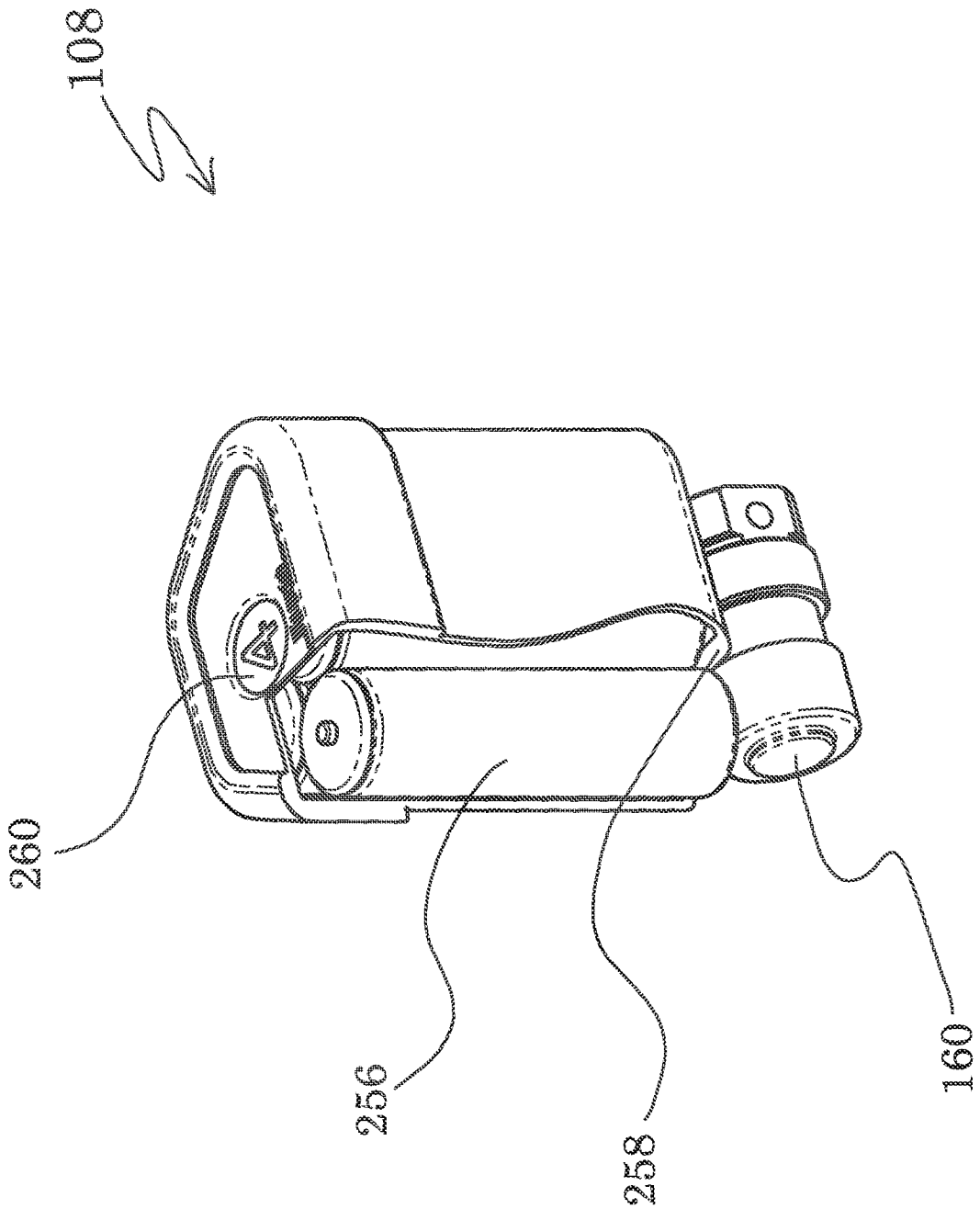

Fig 11

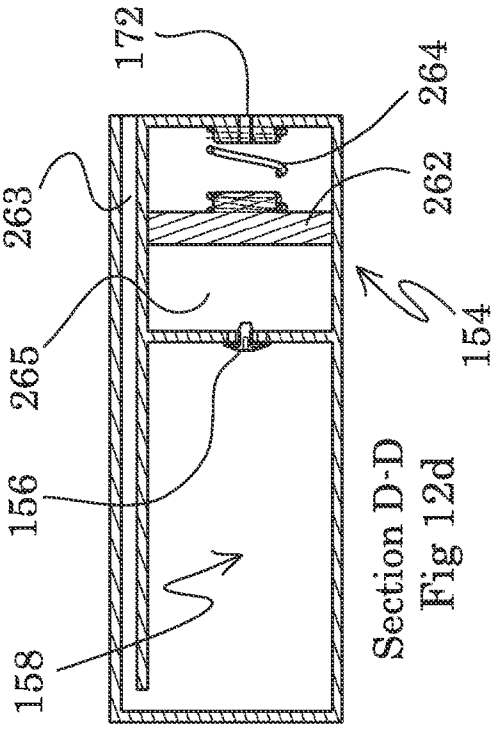

Section D-D
Fig 12d

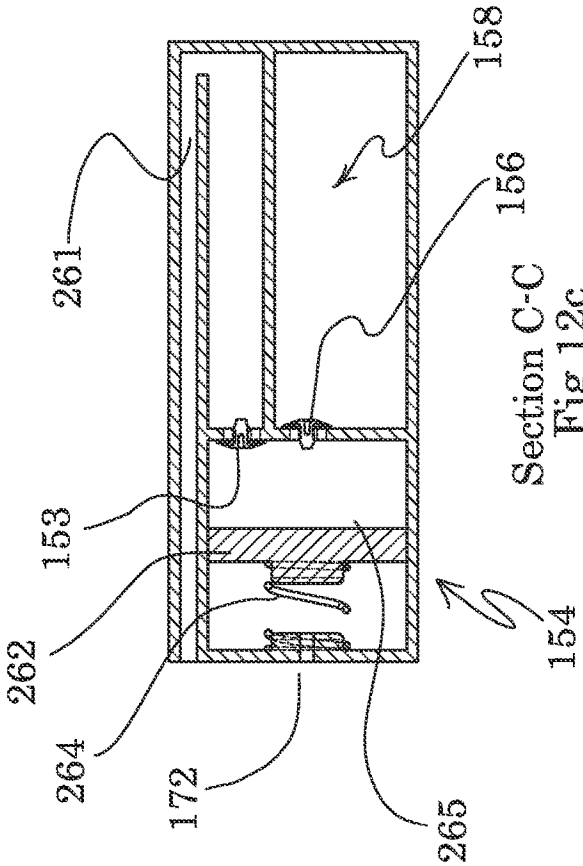

Section C-C
Fig 12c

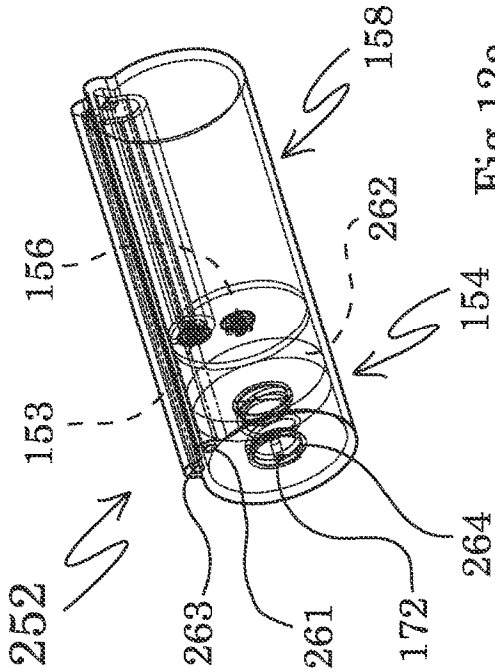

Fig 12a

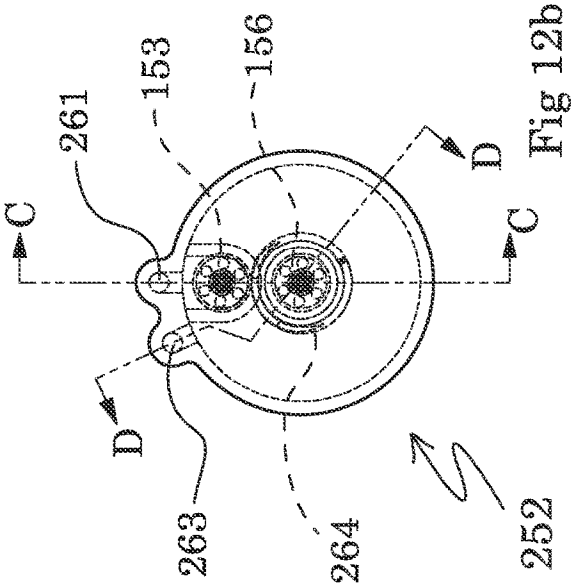

Fig 12b

GCE - Exhibit 1001, Page 16
GCE Gas Control Equipment Inc. v. VBOX, Inc.
IPR2023-00326

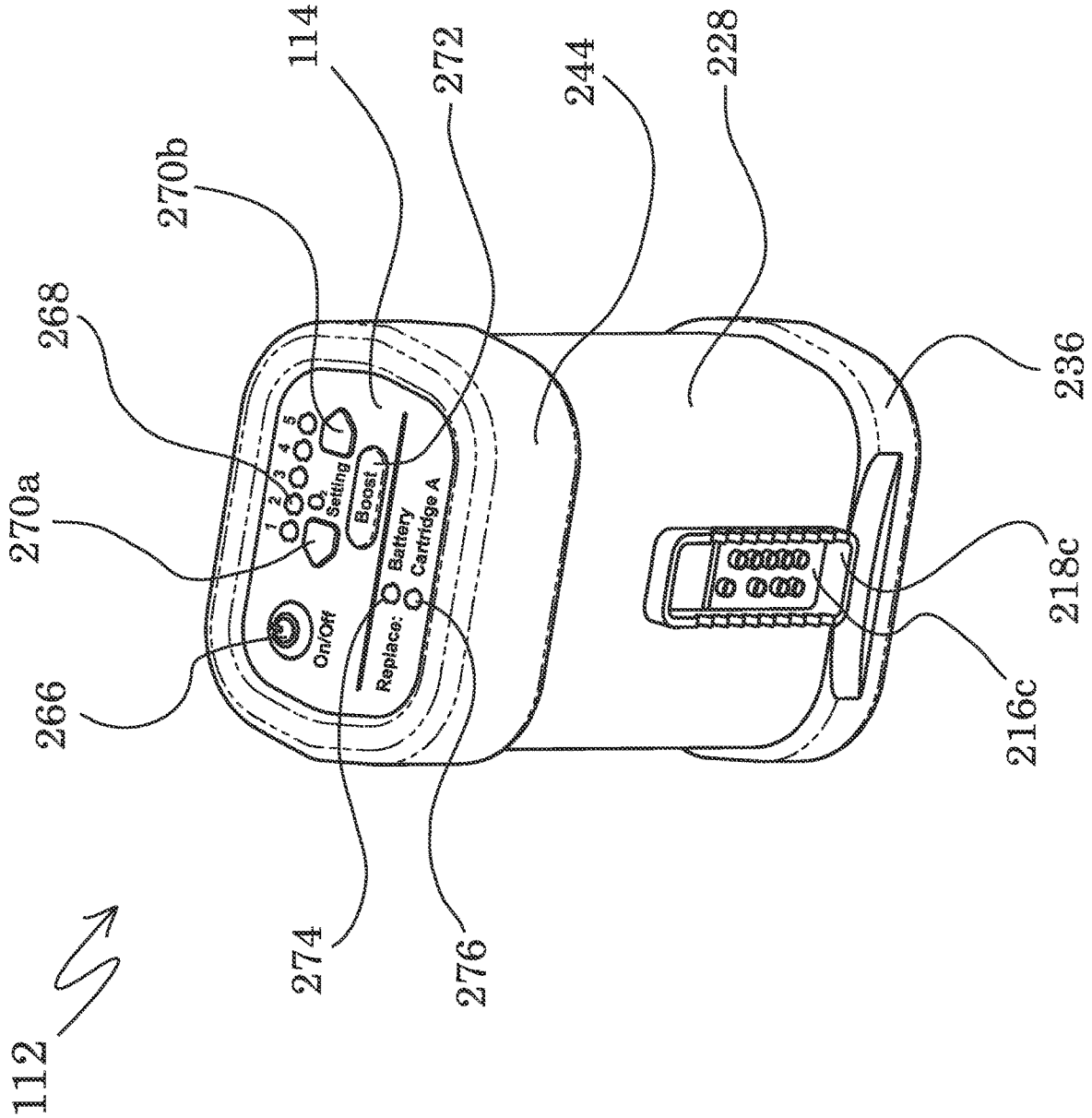

Fig 13

GCE - Exhibit 1001, Page 17
GCE Gas Control Equipment Inc. v. VBOX, Inc.
IPR2023-00326

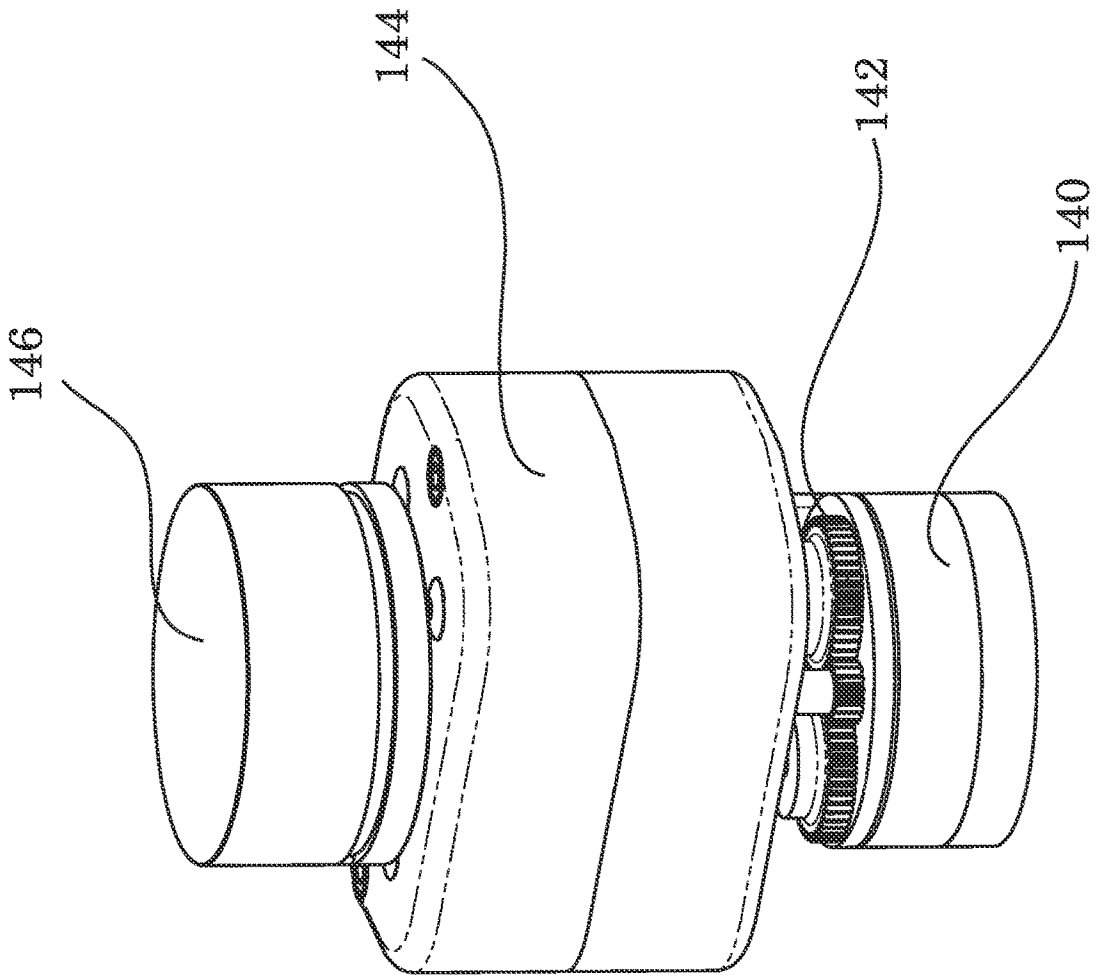

Fig 14

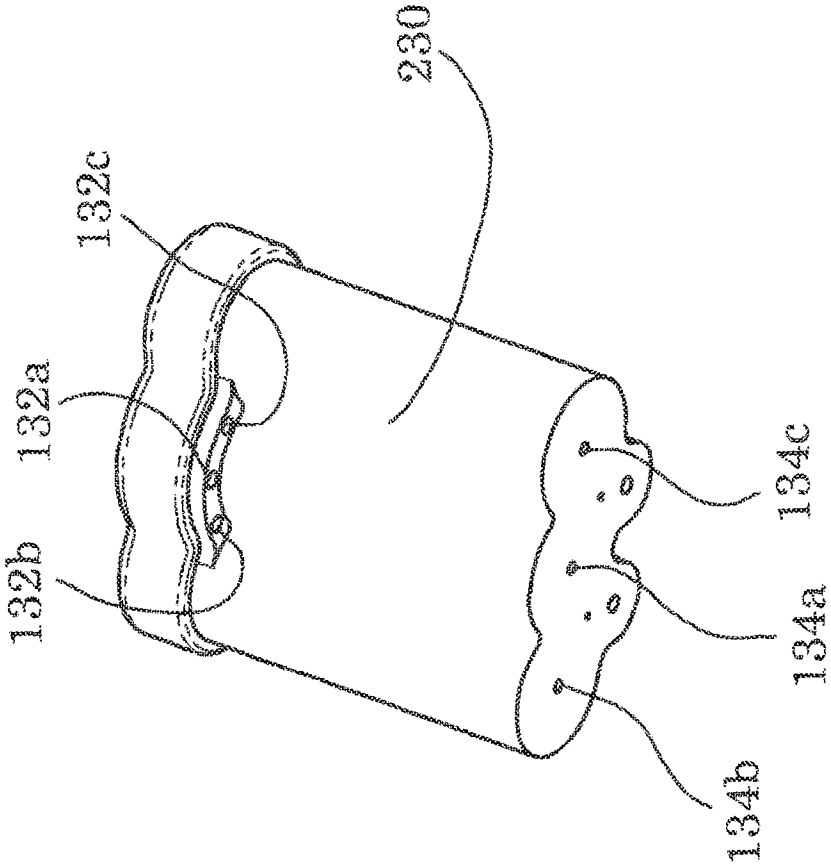

Fig 15

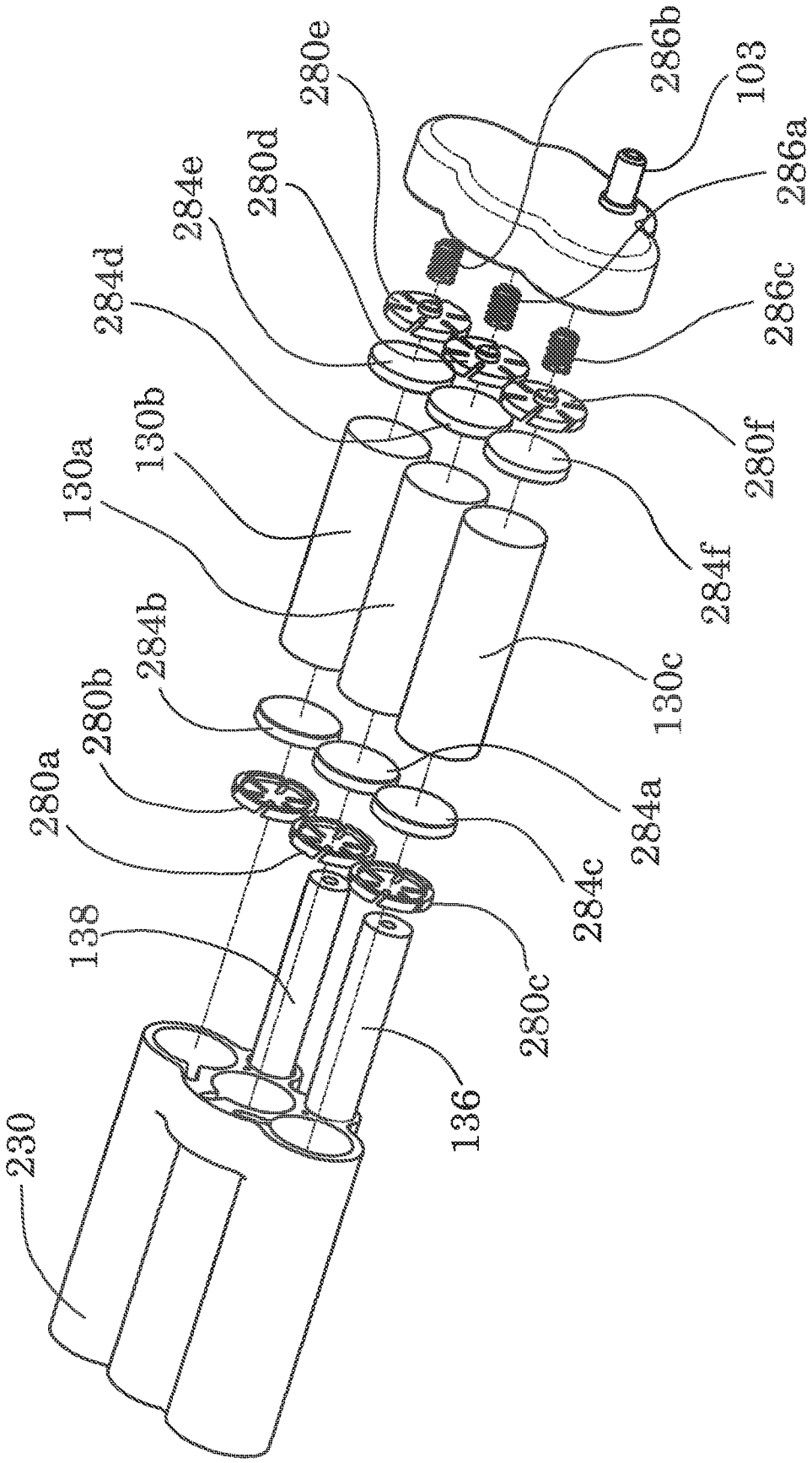

Fig 16

GCE - Exhibit 1001, Page 20
GCE Gas Control Equipment Inc. v. VBOX, Inc.
IPR2023-00326

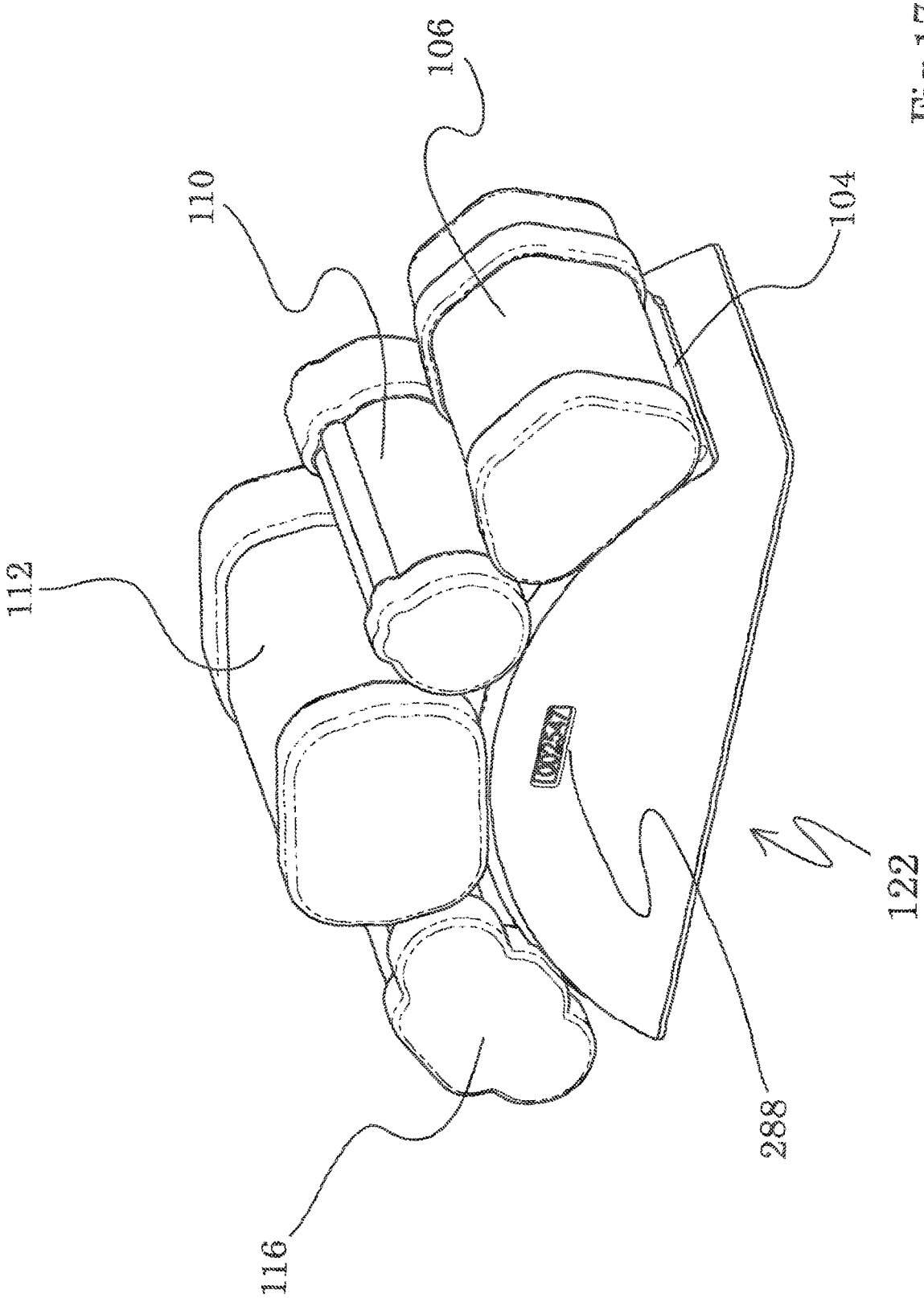

Fig 17

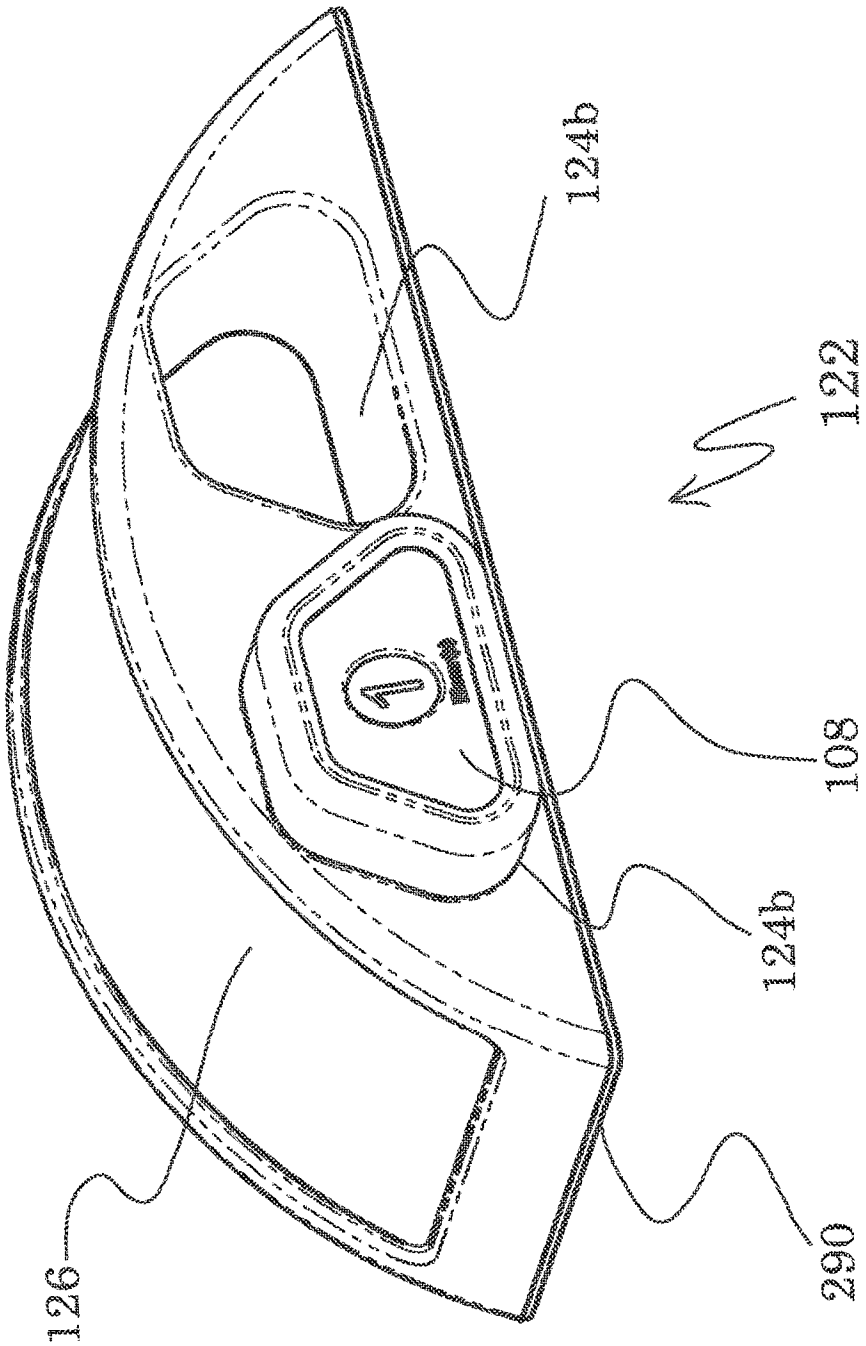

Fig 18

GCE - Exhibit 1001, Page 23
GCE Gas Control Equipment Inc. v. VBOX, Inc.
IPR2023-00326

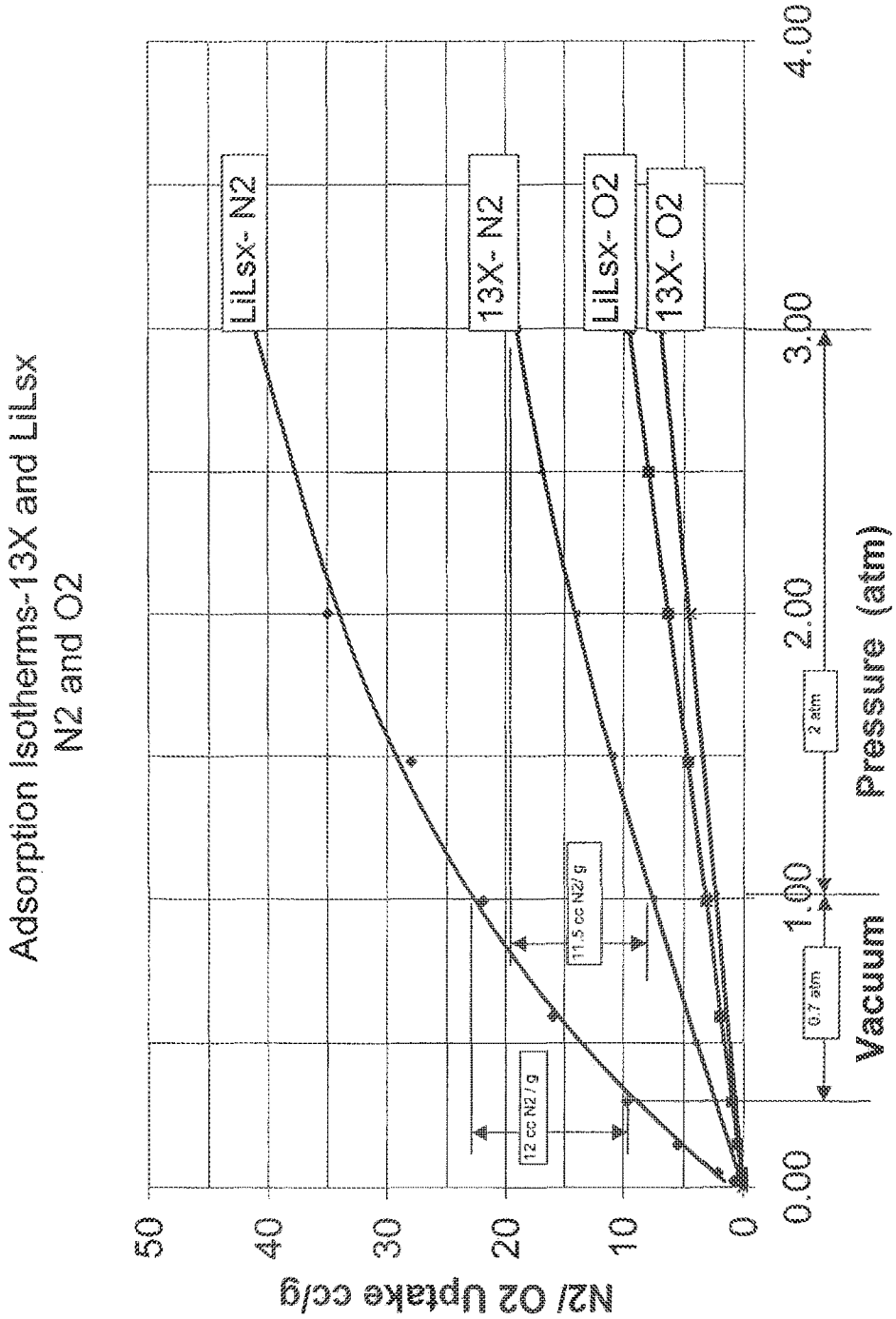

FIG. 19

REMOVABLE CARTRIDGE FOR OXYGEN CONCENTRATOR

RELATED APPLICATIONS

This application is a continuation of earlier filed application Ser. No. 14/193,504, filed Feb. 28, 2014, which is a continuation of application Ser. No. 13/795,977, filed Mar. 12, 2013, which is a continuation of application Ser. No. 13/096,362 filed Apr. 28, 2011, which is a continuation of application Ser. No. 11/054,341, filed Feb. 9, 2005. The '504, '977, '362, and '341 Applications are incorporated by reference herein in their entirety.

BACKGROUND

The field of this invention relates to oxygen concentrators. In particular, the invention relates to wearable oxygen concentration systems utilizing vacuum swing adsorption for creating an oxygen stream for ambulatory respiratory patients.

There is a need for home and ambulatory oxygen systems for use by patients. Supplemental oxygen is required for patients exhibiting symptoms from certain diseases and lung disorders; for example, pulmonary fibrosis, sarcoidosis, or occupational lung disease. For such patients, oxygen therapy is an increasingly beneficial prescription to help the patients live normal and productive lives. While not a cure for lung disease, prescriptive supplemental oxygen increases blood oxygenation, which reverses hypoxemia. Oxygen prescriptions prevent long-term effects of oxygen deficiency on organ systems, the heart, brain and kidneys. Oxygen treatment is also prescribed for Chronic Obstructive Pulmonary Disease (COPD), heart disease, AIDS, asthma, and emphysema.

Currently, supplemental medical oxygen for therapy is provided to a patient from high pressure gas cylinders; cryogenic liquid in vacuum-insulated containers or thermos bottles commonly called "dewars", and oxygen concentrators. Some patients require in-home oxygen only, while others require in-home as well as ambulatory oxygen depending on the prescription. The three systems are all used for in-home use. However, oxygen concentrators provide a special beneficial advantage because they do not require refilling of dewars or exchange of empty cylinders with full ones. Home oxygen concentrators, however, do have drawbacks. They consume relatively large amounts of electricity; are relatively large and heavy; emit excessive heat and are relatively noisy.

There has been a need for an improved portable device for supplying oxygen to a patient. Only small high pressure gas bottles and small liquid dewars are truly portable enough to be used for ambulatory needs. Either system may be used for both in-home and ambulatory use. A patient using a stationary oxygen system at home (or even a portable system which cannot be readily transported), who travels must opt for small cylinders towed in a wheeled stroller or for portable containers that they carry, typically on a shoulder sling. Both of these options have significant drawbacks.

A major drawback of the cylinder option is that small cylinders only provide oxygen for a short duration. Moreover, these cylinders are maintained at a high pressure, and thus their use is restricted due to safety considerations. Another drawback of the cylinders is the refill requirement after depletion of the contents of the cylinder. Empty cylinders must be refilled at specialized facilities, or in the patient's home using a commercial oxygen concentrator

which extracts oxygen from the air. The latter option requires an on-site compressor to boost the output pressure of the concentrator to meet cylinder refill pressure requirements. Filling of cylinders with oxygen in the home is potentially dangerous due to the physics involved with compressing gas. Another detriment to cylinder usage is fire hazards associated with storage of large volumes of oxygen in the home environment.

Convenience and safety issues are not the only drawbacks associated with the use of cylinders. Another drawback is the cost associated with cylinders. Cylinders require special care, and specialized materials are required for high pressure oxygen compatibility, which in turn drives up the cost of cylinder-based systems.

The liquid oxygen storage system also has drawbacks. The primary drawback is the requirement of a base reservoir which necessitates refilling once a week or more from an outside source. Liquid oxygen is transferred from the base unit to a portable dewar, which is used by an ambulatory patient. However, there is substantial waste, as a certain amount of oxygen is lost during the transfer to the portable containers and from evaporation. Up to twenty percent of the contents of the base cylinder is lost in the course of two weeks because of losses in transfers and normal evaporation. Even without withdrawal by the patient, the base reservoir will typically boil dry over a period of one to two months.

The aforementioned systems all require a refilling station. When the patient is out in public, such stations are not readily available. Upon running low (or out) of oxygen, the patient must return home to a specified place that can refill the system. Such a requirement detracts from the ambulatory usefulness of the systems.

The industry has developed a set of recommendations for systems targeted to provide portable oxygen for ambulatory patients. The Fifth Oxygen Consensus Conference set forth the following standards for long-term oxygen therapy ambulatory equipment: 1) equipment must weigh less than 10 lbs., 2) equipment must provide the equivalent of 2 liter/min of continuous flow O_2, and 3) the flow rate must be maintained for four hours or more. Thus, ambulatory equipment, or personal oxygen systems (POS), are to be inconspicuous to the public as well as unrestricting to the patient. Cylinders and other liquid oxygen systems tend to be bulky, which interferes with normal daily activities. Similarly, cylinders and liquid oxygen systems are difficult to conceal from public view. Ideally, a POS is small, lightweight, quiet, and flexible which allows the device to be concealed from the public. The present invention, whereby oxygen rich gas is provided to a patient from a wearable oxygen concentrator, meets and exceeds these standards.

BRIEF SUMMARY OF THE INVENTION

A removable gas separation cartridge includes a housing having an inlet port, an outlet port, and a bed of adsorbent material. The cartridge is removable from an oxygen concentrator which separates oxygen from ambient air by using an absorption process.

BRIEF DESCRIPTION OF THE DRAWINGS

FIG. **1** is a front view of a patient carrying the oxygen concentrator of the present invention.

FIG. **2** is a front perspective view of the oxygen concentrator.

FIG. **3** is a rear perspective view of the oxygen concentrator.

FIG. **4** is a front perspective view of the oxygen concentrator and a docking station.

FIG. **5** is a block diagram showing the components and connections of the oxygen concentrator.

FIG. **6** is a diagram showing rotary valve timing.

FIG. **7** is an exploded view of the oxygen concentrator in which the power pack and the adsorbent cartridge have been removed.

FIG. **8** is a perspective view of the oxygen concentrator with a portion of the belt removed.

FIG. **9** is a perspective view of the components of the oxygen concentrator without the belt.

FIG. **10** is a perspective view of the components contained within the case portions of the modules and their associated pneumatic and electrical connections of the oxygen concentrator.

FIG. **11** is a perspective view of the components contained within a battery module.

FIG. **12***a* is a perspective view of an accumulator.

FIG. **12***b* is a top view of the accumulator.

FIG. **12***c* is a sectional view of the accumulator.

FIG. **12***d* is another sectional view of the accumulator.

FIG. **13** is a perspective view of a control module.

FIG. **14** is a front view of the interior components of the control module.

FIG. **15** is a perspective view of the cartridge contained within a cartridge module.

FIG. **16** is an exploded view of columns and filters within the cartridge.

FIG. **17** is a rear perspective view of the oxygen concentrator and the docking station.

FIG. **18** is a front perspective view of the docking station.

FIG. **19** is a chart showing the adsorption isotherms for two different adsorbent materials.

DETAILED DESCRIPTION

The current invention relates to separation of gases using vacuum swing adsorption. Specifically, disclosed is an oxygen concentrator for a patient who requires a source of oxygen. The present invention is further explained with reference to the drawn figures in which like structures are referred to by like numerals throughout the several views.

Overview—Oxygen Concentrator **100** (FIGS. **1**-**4**)

FIG. **1** is a front view showing patient P with oxygen concentrator **100** and oxygen delivery tube **102**. Oxygen concentrator **100** is a small unit which utilizes vacuum swing adsorption to separate oxygen from the ambient air around patient P. Oxygen concentrator **100** is compact and light so as not to interfere with the ambulatory movement of patient P, and can produce a product stream of gas containing a range of eighty-five to ninety-five percent oxygen.

Oxygen delivery tube **102** is a polymer tube or similar oxidation resistant structure, which extends from oxygen concentrator **100** to the nose, mouth, or port into the upper airway of patient P. Tube **102** allows delivery of oxygen to patient P for inhalation. In FIG. **1**, patient P is about six foot tall to illustrate an approximation of the relative size of oxygen concentrator **100**.

FIG. **2** is a perspective view of oxygen concentrator **100**. Oxygen concentrator **100** is comprised of belt **104**, power module **106** containing power pack **108**, reservoir module **110**, control module **112** containing user interface **114**, and separation cartridge module **116**. Oxygen concentrator **100** is a portable oxygen separator used to provide an oxygen rich gas stream to patient P. Belt **104** connects and carries the modules **106**, **110**, **112**, and **116** of oxygen concentrator **100**. Belt **104** may contain belt loops (not illustrated), clips, or a pair of straps that contain a buckle and holes or like fastening device for securing oxygen concentrator **100** to patient P. Alternatively, oxygen concentrator **100** may be placed in a purse, fanny pack, or similar personal carrying device for transport with patient P.

Power module **106** provides the necessary power to operate the systems of oxygen concentrator **100**. In the embodiment illustrated, power module **106** contains replaceable power pack **108**. Reservoir module **110** stores oxygen rich gas that has been separated from ambient air by cartridge module **116**. Control module **112** pilots and regulates the interaction of the power module **106**, reservoir module **110**, and separation cartridge module **116** of oxygen concentrator **100**. User interface **114** on control module **112** is a console which allows patient P to adjust and monitor oxygen concentrator **100**.

FIG. **3** is a perspective view of the opposite side of oxygen concentrator **100** as shown in FIG. **2**. Illustrated in FIG. **3** are belt **104**, power module **106**, reservoir module **110**, control module **112**, and separation cartridge module **116**. Belt **104** is constructed to contain belt segments **120** formed by serrations **118**. This allows the belt **104** to be flexible and conform to patient P=s body while wearing oxygen concentrator **100**. Belt **104** is fabricated from a flexible material, such as textile or plastic and contains an inner padding such as foam. Belt **104** also houses the electrical and pneumatic connections of oxygen concentrator **100**.

FIG. **4** is a perspective view of the front side of the oxygen concentrator **100** on docking station **122**. Illustrated are oxygen concentrator **100** comprising belt **104**, power module **106**, reservoir module **110**, control module **112**, and separation cartridge module **116**, along with docking station **122** containing power pack chargers **124***a* and **124***b*. Belt **104** is flexible and thus rests on the arc shaped docking station **122**. Docking station **122** contains power pack chargers **124***a* (with power pack **108***a* inserted therein) and **124***b*, as well as concentrator dock **126** which supports the oxygen concentrator **100** while on the docking station **122**. Docking station **122** converts AC power to recharge power packs **108**.

Oxygen Concentrator **100** System Components and Connections (FIG. **5**)

FIG. **5** is a block diagram of oxygen concentrator **100** illustrating power module **106**, reservoir module **110**, control module **112**, and separation cartridge module **116**, along with docking station **122** and showing the components and connections among the modules and docking station **122**. Oxygen concentrator **100** components includes product gas outlet port **103**, adsorbent columns **130***a*-**130***c* (each containing a respective inlet port **132***a*-**132***c* and a respective outlet port **134***a*-**134***c*), air inlet port **135**, air inlet filter **136**, product gas final filter **138**, main valve **140**, drive reducer **142**, vacuum pump **144**, drive **146**, electric control module (ECM) **148**, breakthrough flow sensor **150**, valve position sensor **152**, product control pump **154**, check valve **156**, main storage reservoir **158** containing pressure sensor **159**, dispensing valve **160**, as well as previously identified components tubing **102**, power pack **108**, user interface **114**, and docking station **122**.

As shown in FIG. **5**, adsorbent cartridge module **116** includes adsorbent columns **130***a*-**130***c* each containing respective inlet ports **132***a*-**132***c* and outlet ports **134***a*-**134***c*, air inlet filter **136**, and product gas final filter **138**. Ambient air enters air inlet port **135**, passes through air inlet filter **136**, and enters valve **140** for distribution to adsorbent columns **130***a*-**130***c*. Product gas passes through final filter **138** and product gas outlet port **103** into tubing **102** for delivery to

patient P. Inlet ports **132***a*-**132***c* of adsorbent columns **130***a*-**130***c* connect to valve **140** through inlet lines **164***a*-**164***c*. Similarly, outlet ports **134***a*-**134***c* connect to valve **140** through outlet lines **166***a*-**166***c*.

Control module **112** houses main valve **140**, drive reducer **142**, vacuum pump **144**, drive **146**, electric control module (ECM) **148**, breakthrough flow sensor **150**, valve position sensor **152**, and contains user interface **114**. Main valve **140** is pneumatically connected to adsorbent columns **130***a*-**130***c*, as well as inlet filter **136** via inlet line **168**, vacuum pump **144** via vacuum inlet line **170**, product control pump **154** via vacuum line **172** and product gas line **174**, and main reservoir **158** via product gas line **176**. Valve **140** is actuated by drive **146** through a motor speed reducer **142**. Also, valve **140** connects to breakthrough flow sensor **150** and valve position sensor **152** which send electrical inputs **178** and **180** to ECM **148**.

ECM **148** is a logic control, such as a PLC (programmable logic controller), microprocessor, or similar structure which controls operation of oxygen concentrator **100**. ECM **148** contains the set of inputs and outputs associated with the modules for regulating oxygen concentrator **100**. ECM **148** also receives control setting inputs **182** and **184** from user interface **114**, and docking station **122**, respectively, power pack management input **186** from power pack **108**, reservoir pressure input **188** from pressure sensor **159** in main reservoir **158**, and nasal pressure input **190** from dispensing valve **160**. ECM **148** provides interface output **192** to the user interface **114**, interface output **194** to docking station **122**, power management output **196** to power pack **108**, dispensing valve time open output **198** to dispensing valve **160**, and motor drive output **200** to drive **146**.

User interface **114** contains physical controls such as dials, toggle switches, push button switches, and similar controls, for operating oxygen concentrator **100**. The physical controls provide electrical control settings to ECM **148**. ECM **148** reads these settings as inputs **182** and provides output **192** to the user interface **114**. The status is converted from electric signals to physical output by indicator lights, status display, and similar structures of user interface **114**.

Power pack management input **186** and output **196** control the charge and discharge of voltage from power pack **108** to drive **146** via ECM **148**. Drive **146** will activate vacuum pump **144**, valve **140** through drive speed reducer **142**, and any other systems requiring power. Power pack management output **196** will also supply power to indicator lights, status display, audible alarm (if included), and other passive electrical system requirements on user interface **114** through ECM **148**.

ECM **148** controls and coordinates the steps of the vacuum swing adsorption cycle through its inputs and outputs. In one embodiment, breakthrough flow sensor **150** provides an input **178** into ECM **148** by measuring air flow rates. The position of valve **140** is detected by valve position sensor **152** to produce input **180**. Reservoir **158** contains a sensor to produce reservoir pressure input **188**. Dispensing valve **160** also contains a pressure sensor which provides nasal pressure input **190** in response to differential pressure. ECM **148** reads these inputs to control the cycle by changing outputs, such as motor drive output **200** for drive **146**. Drive **146** propels vacuum pump **144**. Vacuum pump **144** creates a vacuum that is communicated to valve **140** through vacuum input line **170**, while dispelling nitrogen rich gas as exhaust **177**. Another output **198** controls the time that dispensing valve **160** is open. In this embodiment, the inputs and outputs are connected to a PLC within ECM **148** which is programmed to control the cycle of oxygen concentrator **100**.

Contained within reservoir module **110** is an oxygen-rich gas accumulator comprising reservoir **158**, check valve **156**, product control pump **154**, and check valve **153**. Reservoir **158** receives oxygen-rich gas produced by oxygen concentrator **100** and stores it at a low pressure above ambient until it is required for use. A portion of the stored oxygen-rich gas is delivered back to valve **140** by product gas line **176** for use in ordering the nitrogen content in adsorbent columns **130***a*-**130***c* by moving much of the residual nitrogen held after evacuation near the outlets **134***a*-**134***c* toward inlets **132***a*-**132***c* of the columns **130***a*-**130***c*. Reservoir **158** is in communication with dispensing valve **160** through product gas line **202**. Check valve **156** opens to allow oxygen into reservoir **158** and closes to prevent backflow of oxygen upon reaching the desired pressure in reservoir **158**.

Product control pump **154** is driven by vacuum provided by the vacuum pump **144** through valve **140** via vacuum line **172**. Product line **174** is in communication from separation cartridge module **116** to check valve **153**, which opens to allow product control pump **154** to transport separated oxygen-rich gas to reservoir **158**. Product control pump **154** delivers the product gas to main reservoir **158** through check valve **156**.

Dispensing valve **160** and power pack **108** are contained within power module **106**. Dispensing valve **160** is used to feed the flow of oxygen-rich gas to the patient P by delivery of the product gas through final product gas line **205** to product final filter **138**. The product gas is obtained from the main reservoir **158** through product gas line **202**. Power pack **108** provides the power supply for oxygen concentrator **100** as previously described. Power pack **108** is rechargeable through docking station **122** as represented by power connection **204**.

Vacuum Swing Adsorption (VSA) Process-Overview

Oxygen concentrator **100** operates using a vacuum swing adsorption process, which involves a series of cycles that include a feed step or phase, an evacuation step or phase, and a repressurization step or phase. Each of these three phases takes place in one of the three columns **130***a*-**130***c* at any given time. Each column **130***a*-**130***c* is in a different phase. For purposes of explanation, the VSA process will be described in reference to A column **130"**, which is representative of each of the three columns **130***a*-**130***c*.

In the feed phase, a gas stream of ambient air **162** enters inlet end **132** of column **130** while product gas containing concentrated oxygen is delivered from outlet end **134** of column **130**. The slight vacuum in column **130** draws air **162** into column **130** and through an adsorbent material (typically a zeolite) which preferentially retains specific components of air (nitrogen), allowing the desired product (oxygen) to pass through. A mass transfer zone (MTZ), which is a small region in which nitrogen is being adsorbed, is passing through the adsorbent material. The MTZ divides the column **130** into two segments: a nitrogen-rich segment where the MTZ has passed through, and an oxygen-rich segment ahead of the moving MTZ. The MTZ forms at the inlet **132** at the start of the process and gradually moves through the column to the outlet **134** as the process proceeds. Outlet end **134** of column **130** is connected to main reservoir **158** through main valve **140**, check valve **153**, and product control pump **154**, so that oxygen-rich product gas from column **130** is pumped into reservoir **158**.

In the evacuation phase, column **130** is brought to a stronger vacuum by vacuum pump **144**, causing the

adsorbed component, i.e. nitrogen, to be desorbed. The nitrogen is evacuated from column **130** through main valve **140**, and is discharged by vacuum pump **144** as waste exhaust **177**.

In the repressurization phase, the previously evacuated column **130** is returned to near 1 atm. Ambient air **162** enters column **130** through inlet end **132**, and recycled product gas from product line **176** enters column **130** through outlet end **134**. The gases replace the vacuum that was previously drawn in column **130** during the evacuation phase. Just prior to column **130** reaching about 1 atm, the repressurization phase ends and the feed phase of the cycle begins again.

This constitutes the general principles of vacuum swing adsorption (VSA) for gas separation. All phases can be accomplished with a single column, or with a plurality of columns. If a plurality of columns are used, it is preferable to have a multiple of three (illustrated as **130***a*-**130***c* in FIG. **5**) that are sequenced out of phase for the different cycle phases in order to maintain constant product flow.

The Feed Phase—Breakthrough Detection

During the feed phase of the separation cycle, the position of the MTZ within adsorbent column **130** is monitored, determined, and beneficially used to control the termination of the feed phase. The control results in improvements in product purity and recovery with concomitant decrease in energy consumed, as well as system size and system weight for a given volume of product produced.

Breakthrough is defined as the point when the MTZ reaches outlet **134** of adsorbent column **130**. At this point, feed gas begins to flow into the separated product gas stream. This is undesirable because the purity of the product stream is reduced by the feed stream gas if the feed is allowed to continue past this point. Conversely, if the feed phase is terminated before the MTZ nears outlet **134** of column **130**, product recovery will be reduced because product gas contained in column **130** between the MTZ and outlet **134** of column **130** will be subjected to the evacuation phase that follows the feed phase in the separation cycle, and much of this remaining product gas will be lost with the desorbed gas in the waste stream.

For a particular column geometry, temperature, adsorbent type and condition, and cycle vacuum levels, there is an optimal time during the feed phase of the cycle to terminate the feed—before purity requirements are compromised, but after the maximum possible product has been recovered from column **130**. This optimal time is determined by the detection of the passage of the mass transfer zone through a specific position relative to outlet end **134** of column **130**.

For some combinations of system variables, the optimum feed termination time corresponds to the beginning of breakthrough when the leading edge of the MTZ has just reached outlet end **134** of column **130**. This event can be detected by monitoring either or both of the gas flow rates at inlet **132** or outlet **134** to column **130**. Before breakthrough, the outlet flow rate is less than the inlet flow rate by an amount equal to the rate of nitrogen gas adsorption of column **130** from the feed gas flow. After breakthrough, column **130** is no longer adsorbing nitrogen from the feed gas, so the inflow and outflow rates of column **130** become equal. Any method of measuring gas flow rates to determine the point in time when these flow rates begin the transition toward equality can be used to detect this beginning of breakthrough.

It has been determined that if the inflow rate of air to column **130** is maintained constant, a simple detection of a significant rise in slope of the outflow rate marks breakthrough. Conversely, if the outflow rate is held fairly steady, then a falling slope of the inflow rate marks the breakthrough. Monitoring the ratio of flow for the inlet and outlet and detecting a significant change in the ratio of flows toward a ratio of 1:1 can mark breakthrough in systems where inflow or outflow may not be steady enough to detect breakthrough by monitoring just one of the flow rates.

For other combinations of system variables, the optimum feed termination time may correspond to the MTZ position prior to breakthrough. In these cases, it is beneficial for a specific amount of product to be intentionally left in column **130** at the end of a feed phase. Detecting the position of the MTZ before breakthrough can be accomplished by additional methods.

One method used determines the volume of gas passed into or out of adsorbent column **130** up to the point of breakthrough by integrating the flow rate during the time interval between an initial feed and breakthrough while using some breakthrough detection method as previously described. Volume of flow may also be directly measured by physical equivalent methods using displacements of known volumes. Once the volume of gas that passes the column up to the point of breakthrough is determined, the volume of gas flow can be monitored during subsequent feed phases and the feed terminated when the volume reaches a specific value less than that for breakthrough. At any time during the feed phase, the volume of gas passed through column **130** since the beginning of feed divided by the volume of gas at breakthrough will be the same ratio as the position of the mass transfer zone divided by the length of column **130** (assuming a constant cross sectional area along the length). Using this relationship, the position of the MTZ within column **130** can be adequately determined during the feed phase.

The components of oxygen concentrator **100** as previously described are used to complete the cyclical phases of VSA to separate gases. The feed phase operates at a slight vacuum just below ambient (in the range of 0.9 to 1 atm). This provides just enough driving force to pull ambient air **162** into adsorbent column **130** through inlet filter **136**. The vacuum is caused by product control pump **154**, which is driven by the vacuum drawn by vacuum pump **144**. Product control pump **154** is a piston pump or similar structure that meters a volume of gas. Product control pump **154** connects with a volume much greater than the piston displacement volume, such as main reservoir **158**.

The feed phase is allowed to proceed until breakthrough is detected. Up to this point, the outflow gas from adsorbent column **130** has been a high purity oxygen/argon, low percent nitrogen mixture. The MTZ position is controlled to minimize nitrogen into the product gas mixture. The MTZ position is monitored by breakthrough flow sensor **150**, which detects a large increase in flow rate associated with breakthrough when the nitrogen no longer is preferentially adsorbed by adsorbent column **130**. Breakthrough flow sensor is located near the column inlet **132**, column outlet **134**, or similar place where the flow rate being measured is accessible. When the increase MTZ flow is detected, a signal is sent to ECM **148**, which also receives valve position signal **180** from the valve position sensor **152**. The ECM **148** compares the timing of the MTZ breakthrough signal and the valve position signal and makes a minor adjustment to motor speed **200** based on lead, lag, or on-time status to keep the breakthrough time near the end of each feed phase. Alternately, ECM **148** receives a signal from breakthrough flow sensor **150** and immediately terminates the current feed phase in column **130** by signaling valve **140** to rotate to start the next phase. In yet another embodiment, the separation system contains a shut off valve that is signaled to close the

feed of ambient air **162** into column **130**, or the delivery of product gas from the column upon breakthrough detection.

In another embodiment, the method for determining the position of the mass transfer zone prior to breakthrough is accomplished by placing a small amount of non-adsorbing material within adsorbent column **130** at a particular position. When the mass transfer zone passes through this position, a flow change is detectable as the adsorption of gas is briefly interrupted by the non-adsorbing segment of column **130**. The resulting flow change is detectable using the same methods for breakthrough detection previously described.

With larger columns and slower feed phases, the position of the mass transfer zone has been established by measuring temperature rise at positions of interest within column **130**. Significant temperature increases result from the heat of adsorption at the MTZ and can be detected by thermistors or similar devices placed within column **130**.

The Evacuation Phase

The evacuation phase brings the gas in adsorbent column **130** that was just in the feed phase to a vacuum state. At the end of the feed phase, the adsorbent column **130** is in equilibrium with the air infeed mixture near 1 atm from column inlet **132** up to the MTZ. Hence, if the ending position of the MTZ is established, and the nitrogen, oxygen, and argon isotherms for the chosen adsorbent mass are known, then the quantity of these gases present in adsorbent column **130** at the end of each feed phase is known. Vacuum pump **144** draws a vacuum on adsorbent column **130**. This vacuum level is determined and set to a state that will remove a large portion of the gas left in column **130**. In one embodiment, this is 0.2 to 0.3 atm. By percentage, the vast majority of gas discharged is nitrogen. The evacuated gas is discharged as waste from exhaust **177** of vacuum pump **144**. The preferred embodiment uses a fixed displacement type of vacuum pump **144**. During each evacuation phase, the adsorbed gas in column **130** is expanded into a much larger volume made up of the column volume plus the fixed displacement volume of pump **144**.

The evacuate phase creates a self regulating effect that compensates for reductions in the amount of nitrogen adsorbed by adsorbent column **130** as the adsorbent degrades (ages). If the adsorbent loses efficiency, less nitrogen will be present in column **130** at the end of the phase, but the volume of the pump that the nitrogen expands into remains the same. A stronger vacuum will result that will remove more nitrogen and therefore allow more air to be fed during the next feed phase. A more constant breakthrough time results and provides a more robust product cycle.

The evacuation is provided by vacuum pump **144**, which is controlled and activated by drive **146**. The volume removed for each cycle of the vacuum pump **144** will remain constant, but the motor drive output **200** will be controlled by the rate of product gas used by patient P. The amount of oxygen used by patient P depends on the patient P=s on-demand respiratory rate, which is sensed by the device and from a variable position switch which sends an input **192** from user interface **114** to ECM **148**, which in turn provides motor drive output **200** to drive **146**. This determines the speed of each successive phase and, therefore, the oxygen production rate.

In one embodiment, a purge is applied at the very end of an evacuation phase. While still in the evacuation phase, a purge of product gas (mostly oxygen) introduced through outlet **134** effectively drives out a portion of nitrogen in column **130** through inlet **132**. Adding the purge gas of high purity oxygen/argon through outlet **134** desorbs more nitrogen from outlet **134** of column **130**, and pushes the nitrogen toward inlet **132** of adsorbent column **130** and creates an ordering of the gases. The purge volume is a function of vacuum level and adsorbent characteristics. A purge portion of the evacuation phase is not a necessary phase for a functioning device, but allows high oxygen purity to be maintained with weaker vacuum levels.

The Repressurization Phase

The repressurization phase brings adsorbent column **130** (just previously evacuated and purged) up to the feed pressure. In one embodiment, the gas used for repressurization is from both the infeed ambient air **162** and a counter stream from the (oxygen-rich) product gas line **176** from the main reservoir **158**. Alternately, the repressurization of product gas can be accomplished through valve design negating the need for a separate line. The product gas is dispensed from a stream of product gas from the adsorbent column that is in the feed phase through a vacuum break valve used during repressurization. Repressurization with product gas can be done before, simultaneously, or after partial pressurization with ambient air. Repressurization with product gas is done at the opposite end of column **130** as repressurization with ambient air **162**.

The effect of adding the repressurization gas of high purity oxygen/argon through outlet **134** creates a cleaning zone at outlet **134** of adsorbent column **130** where, during the feed phase that follows next, any stray nitrogen can be preferentially adsorbed and not discharged as product gas. This improves the ordering of gases in the adsorbent column **130**. By repeating this phase during successive cycles, the purity will continue to increase in the product output. Weaker vacuums require more oxygen volume returned to column **130** during repressurization if high purity is desired. That is, a stronger vacuum must be drawn on the column **130** to effectuate the same purity of oxygen absent the use of oxygen-rich gas as a back flush for repressurization at the outlet **134** of column **130**. At the end of repressurization, the feed phase will proceed.

Valve **140** Timing (FIG. **6**)

The VSA cycle comprises three phases: evacuation, repressurization, and feed, which occur sequentially in each column **130***a*-**130***c*. For clarity, only column **130***a* will be discussed, although each phase is performed (at different times during a complete cycle) in each of columns **130***a*-**130***c*.

Starting with the evacuation phase of the cycle, a small amount of oxygen (not illustrated) may flow into outlet **134***a* of adsorption column **130***a* to purge adsorption column **130***a*, while vacuum pump **144** withdraws gas present at inlet **134***a* of the column, i.e. nitrogen-rich gas.

During the repressurization phase, an amount of previously separated oxygen flows into outlet **134***a* of adsorption column **130***a* for a short time, and then air is allowed to enter inlet **132***a* of column **130***a* that has been previously evacuated. There may be a slight overlap of the oxygen flow into outlet **134***a* of adsorption column **130***a* and the air flow in the opposite direction into inlet **132***a*. Air freely flows into inlet **132***a* of adsorption column **130***a* upon opening of valve **140** as adsorption column **130***a* has been previously evacuated during the evacuation phase.

During the feed phase, air continues to flow into inlet **132***a* of adsorption column **130***a* while oxygen is removed from outlet **134***a* of column **130***a* by a pressure differential created by product control pump **154**. As the MTZ passes through the adsorption column and reaches a position at or near outlet **134***a*, vacuum pump **144** will again begin to evacuate adsorbent column **130***a* and restart with the evacu-

ation phase. In the embodiment illustrated in FIG. **6**, these phases are controlled by main valve **140**.

FIG. **6** is a diagram showing timing for main valve **140**, which is a rotary valve that moves 360E (one full revolution about a central axis) for each complete cycle of the VSA process. In the embodiment with three columns **130***a*-**130***c*, the timing for each phase of the cycle is 120E. Each column **130***a*-**130***c* is present in a different phase for each 120E of rotation of valve **140** that is different from the other two columns to obtain a sequence that creates a steady flow of oxygen as valve **140** keeps rotating. As shown in the timing diagram, adsorption column **130***a* is in the feed phase of the cycle at a start point of zero degrees. Air is being let in through inlet filter **136** and column inlet **132***a* while separated gas consisting of highly concentrated oxygen is being removed through column outlet **134***a*. A portion of the oxygen-rich product gas is used in the repressurization of column **130***b*. Adsorption column **130***b* is in the repressurization phase at a point of rotary valve **140** being in initial position zero degrees. As valve **140** is turned, column outlet **134***b* is fed with the oxygen-rich gas for a portion of the valve=s rotation, preferably less than 120E. After the flow of oxygen-rich gas enters column **130***b* through the column outlet **134***b*, air repressurization through the opening of column inlet **132***b* begins. In the embodiment shown, this takes place at a point after valve **140** has begun its rotation and ends before it reaches a third of its rotation, or a 120E rotation.

While column **130***a* is in feed phase and column **130***b* is in the repressurization phase, column **130***c* is in the evacuation phase. During the evacuation phase, a vacuum is drawn to remove adsorbed gas through inlet **132***c*, thereby regenerating it for the following feed phase.

In the embodiment shown, each column **130***a*, **130***b*, and **130***c*, is in a different phase of the cycle as one moves vertically down the diagram in FIG. **6**. During the first one hundred twenty degrees of rotation of the rotary valve, column **130***a* is in the feed phase. Simultaneously, from zero to one hundred twenty degrees of rotation, column **130***b* is being repressurized, while column **130***c* is being evacuated.

For the next one hundred twenty degrees of rotation of valve **140** (i.e., from 120E to 240E), adsorption column **130***a* is in the evacuation phase. At this same time, column **130***b* is in the feed phase, and column **130***c* is in the repressurization phase. Moving horizontally across the diagram for column **130***a*, during the final one hundred twenty degrees of rotation of valve **140** (i.e., from 240E to 360E), column **130***a* is repressurized first using separated gas, and then ambient air. Separated gas and ambient air are introduced to the column **130***a* through column inlet **132***a* and column outlet **174***a* at opposite ends of column **130***a*. During the final one hundred twenty degrees of rotation (i.e. from 2401 to 3601) of main valve **140**, column **130***b* is in the evacuation phase, and column **130***c* is in the feed phase. Upon reaching three hundred sixty degrees, valve **140** is back at its starting position (zero degrees), and the cycles for each column **130***a*-**130***c* restart from the zero degree position.

Oxygen Concentrator **100** Physical Components (FIGS. **7**-**16**)

FIG. **7** shows an exploded view of the oxygen concentrator **100**, which includes belt **104**, power module **106** containing removable power pack **108**, reservoir module **110**, control module **112**, and separation cartridge module **116** containing adsorbent cartridge **206**. Power pack **108** has been removed from receptacle **210** of power module **106**. Adsorbent cartridge **206** has been removed from receptacle **208** of cartridge module **116**. Adsorbent cartridge **206** and power pack **108** are easily removable to facilitate replacement.

In this embodiment, power pack **108** is a rechargeable battery. Receptacle **210** contains electrical contacts (not illustrated) for connection to power pack **108**. Cartridge **206** contains a quick-connect attachment (not illustrated) for inlet lines **164***a*-**164***c*, outlet lines **166***a*-**166***c*, inlet air line **168**, and final product gas line **205** (not illustrated) within receptacle **208**. Also present on cartridge **206** are air inlet ports **135** which receive ambient air **162** for separation. Adsorbent cartridge **206** contains adsorbent material that deteriorates in efficiency as it is used and ages.

FIG. **8** is a perspective view of oxygen concentrator **100**. A portion of belt **104** has been removed revealing back interior surface **211** and inner connections amongst the modules, including utility tubes **212**, tube pathways **214**, module apertures **216***a*-**216***d*, and module sockets **218***a*-**218***d*.

Utility tubes **212** run between the adjacent modules and contain either electrical wiring or pneumatic lines, or comprise pneumatic lines and electrical wiring and associated connections. Tubes **212** are constructed to be flexible and bend as belt **104** is manipulated. If the tubes **212** contain electrical lines, the tubes are constructed from a dielectric material to insulate electrical wires, or similar material commonly used in electrical connections. If the tubes **212** comprise pneumatic lines, they may be air tight, small diameter polyvinyl or PVC tubes to connect the various gas input, gas separation, and gas removal systems of the oxygen concentrator **100**. Tubes **212** contain openings or connections as required for electrical and pneumatic communication with each module. The back interior surface **211** of belt **104** contains tube pathways **214**. Pathways **214** fabricated on the interior surface **211** of belt **104** allow the utility tubes **212** to extend between the modules **106**, **110**, **112**, and **116**. Tube pathways **214** create a semi-partitioned area on back interior surface **211** of belt **104** which support tubes **212**.

Belt **104** is fabricated to contain apertures **216***a*-**216***d* which allow modules **106**, **110**, **112**, and **116** to connect utility tubes **212** of belt **104** through sockets **218***a*-**218***d*. Apertures **216***a*-**216***d* and sockets **218***a*-**218***d* are fabricated as part of modules **106**, **110**, **112**, and **116**. Serrations **118** can be seen between the upper and lower edges **220** and **222** of belt **104**. When fabrication of belt **104** is completed, padding will be inserted between edges **220** and **222**, and material will be wrapped around creating serrations **118** and belt segments **120** to complete belt **104** as illustrated in FIG. **3**. The padding is fabricated over the top of tubes **212** and tube pathways **214**, or separately fabricated and fastened to back interior surface **211** during assembly of belt **104**. Individual modules allow the device to flex when mounted about a curved surface, such as a belt around patient P=s waist. The construction of belt **104** with tubes **212** allows patient P to manipulate the oxygen concentrator **100**, such as by bending belt **104** to wear around the waist, place on docking station **122**, or folding concentrator **100** in half for transport in a carryall.

FIG. **9** is a perspective view of modules **106**, **110**, **112**, and **116** of oxygen concentrator **100**. In this view, belt **104** has been removed to illustrate the positions of sockets **218***a*-**218***d* containing apertures **216***a*-**216***d* on each respective module **106**, **110**, **112**, and **116**. Each respective module **106**, **110**, **112**, and **116** is constructed from a thermoplastic material such as acrylanitrile butadine styrene (ABS) or high

density polyethylene (HDPE), or a lightweight metal or a similar rigid material that is oxidation resistant.

Each module **106**, **110**, **112**, and **116**, comprises a case portion **224**, **226**, **228**, and **230**, defining the outer volume of each respectively. Bottom padding **232**, **234**, **236**, and **238**, covers the lower base portion of each module **106**, **110**, **112**, and **116**, respectively. Similarly, top padding **240** extends around the top perimeter of power module **106**, while top padding **242** and **244** covers the top portions of modules **110** and **112**. Power pack top padding **246** covers the top portion of power pack **108** and cartridge top padding **248** covers the top of separation cartridge **206**. Padding **222-248** is a foam or similar lightweight material that adds protection to the modules as well as acts to reduce vibration of oxygen concentrator **100** felt by patient P. Alternately, oxygen concentrator **100** is enclosed in soft, flexible material to further increase comfort and maintain flexibility. In one embodiment, padding **232-248** is fabricated separately from the modules **106**, **110**, **112**, and **116**, power pack **108** and cartridge **206**. In assembling the oxygen concentrator **100**, padding **232-248** and case portions **224**, **226**, **228**, and **230**, are merged and secured either using fasteners, adhesives, or a manufacturing process such as ultrasonic welding.

Case portions **224**, **226**, **228**, and **230**, of each of the modules **106**, **110**, **112**, and **116**, contain sockets **218***a*-**218***d* fabricated on the surface that contacts belt **104**. Socket **218***a*-**218***d* for each module is constructed to have support paths **250** for electrical wiring and pneumatic tubing similar to those contained within belt **104** represented by tube pathways **214**. Sockets **218***a*-**218***d* are constructed so that support paths **250** on sockets **218***a*-**218***d* align with tube pathways **214** in belt **104** when each individual module **106**, **110** ,**112**, and **116**, is connected to belt **104**. In one embodiment, sockets **218***a*-**218***d* are constructed to allow each individual module **106**, **110**, **112**, and **116**, to snap onto belt **104** or attach in a similar quick connect fashion. Utility tubes **212** comprise quick connects at module apertures **216***a*-**216***d*. Apertures **216***a*-**216***d* are openings in the case portions **224**, **226**, **228**, and **230**, provided for connection of utility tubes **212** to components contained within each module **106**, **110**, **112**, and **116**. This allows for removal of a single module **106**, **110**, **112**, or **116** should a specific component require maintenance or replacement. Sockets **218***a*-**218***d* are constructed from the same material as the case portions **224**, **226**, **228**, and **230**.

FIG. **10** is a perspective view of the components contained within modules **106**, **110**, **112**, and **116**, and the associated pneumatic and electrical connections of oxygen concentrator **100**. Illustrated are power pack **108**, valve **140**, drive reducer **142**, vacuum pump **144**, drive **146**, oxygen accumulator **252** (comprising product control pump **154**, check valves **153** and **156**, and reservoir **158**), dispensing valve **160** connected to nasal pressure sensor line **190** and dispensing valve open line **198**, column inlet lines **164***a*-**164***c*, column outlet lines **166***a*-**166***c*, product control pump vacuum line **172**, product control pump inlet line **174**, product gas line **202**, final product gas line **205**, adsorbent cartridge **206**, and main electrical cable **254**.

Main electrical cable **254** contains a set of electrical wires that carry inputs **178**, **180**, **182**, **188**, and **190**, outputs **192** and **198**, and power lines **186**, **198**, and **200** shown in FIG. **5**. Main electrical cable **254** extends from power pack **108** to ECM **148** (not visible in FIG. **10**). Dispensing valve time open output **198** and nasal pressure sensor input **190** are wires that extend between ECM **148** and dispensing valve **160**. Similarly, the other inputs and outputs are wired to the appropriate system components as illustrated in FIG. **5** (although not specifically illustrated in FIG. **10**.)

Product gas line **202** connects dispensing valve **160** with reservoir **158** of accumulator **252**. Final product gas line **205** connects dispensing valve **160** to product gas outlet port **103** for connection to delivery tube **102** after passing through final filter **136** located in adsorbent cartridge **206** to provide patient P with oxygen rich product gas. Product control pump inlet line **174** extends from main valve **140** to product control pump **154**, which pumps separated oxygen rich gas into reservoir **158**. Vacuum line **172** connects product control pump **154** through valve **140** to a vacuum drawn by vacuum pump **144**, and provides the actuation for product control pump **154**. Column inlet lines **164***a*-**164***c* and column outlet lines **166***a*-**166***c* connect main valve **140** with column inlet ports **132***a*-**132***c* and column outlet ports **134***a*-**134***c* of columns **130***a*-**130***c*, respectively (not illustrated). Inlet air line **168** transports ambient air **162** from separation cartridge **206** to main valve **140**, while vacuum inlet line **170** connects vacuum pump **144** to main valve **140**. All lines **164***a*-**164***c*, **166***a*-**166***c*, **168**, **170**, **172**, **174**, **176**, **202**, and **205**, are pneumatic lines or similar structures that allow for the isolated flow of gases between system components.

FIG. **11** is a perspective view of the components contained within power module **106**: power pack **108** (comprising cells **256**, outer wall **258**, and power pack life indicator **260**) and dispensing valve **160**. In the embodiment illustrated, power pack **108** is a lithium-ion battery pack comprised of five cells **256**. Individual cells **256** are contained within outer wall **258**, part of which has been removed to show cell **256**. Power pack **108** is a battery that is rechargeable and removable from power module **106**. Although illustrated as a trapezoid containing five cylindrical cells, the shape and number of cells will vary depending on the shape of power module **106** and power requirements of oxygen concentrator **100**.

Power pack **108** is a lithium based battery pack capable of being recharged in a recharging socket or station that connects to an external power supply. Alternatively, power pack **108** comprises a battery or fuel cell. In one embodiment, power pack **108** is a lithium ion battery pack that is constructed from several interconnected lithium-ion batteries. Oxygen concentrator **100** uses a maximum of fifteen watts of power. This results in a battery weight of less than 0.7 pounds (0.3 kg). In this embodiment, patient P taking twenty breaths per minute at a setting of 2 liters per minute equivalent can use oxygen concentrator **100** for a minimum of four hours on a fully charged battery. Power pack **108** is easily exchanged with another similar battery pack, and can be removed with a simple pulling or tugging motion. In another embodiment (not illustrated), oxygen concentrator **100** contains a jack for receiving a power cord which can then be plugged into either a 110 volt wall outlet or a 12 volt power supply system (such as a car utility plug) so that power pack **108** can be charged in place in oxygen concentrator **100**.

Power pack life indicator **260** displays the amount of time left that the power pack will operate the oxygen concentrator **100**. As illustrated, power pack life indicator **260** is a display, such as a liquid-crystal display (LCD) or light emitting diode (LED) screen, with numeric output of expected life in hours. The LCD or LED screen may also contain a series of bars that act as indicators. Alternately, power pack life indicator **260** is a light or series of lights.

Dispensing valve **160** is contained within power module **106** and is used to feed the flow of oxygen to patient P. Dispensing valve **160** is a valve activated by a change in

pressure, such as that caused when a person is inhaling. A sensor in the dispensing valve circuit monitors pressure, and opens dispensing valve **160** when a drop in pressure is sensed. ECM **148** communicates with dispensing valve **160** through input **190** and output **198** (see FIG. **5**). Dispensing valve **160** is in communication with reservoir **158** through product gas line **202**. Reservoir **158** is kept at a slight pressure above ambient. Thus, when dispensing valve **160** is opened, oxygen rich gas will flow from reservoir **158** through final product gas line **205**, final product filter **138**, and product gas outlet port **103** for delivery to patient P through tubing **102**. The flow of gas is further assisted by the pressure drop created by patient P=s inhaling. Dispensing valve **160** can be set to deliver oxygen rich gas to patient P for the beginning portion of a breath when patient P first inhales rather than the whole breath.

Dispensing valve **160** provides for operating oxygen concentrator **100** in one of two possible modes: pulse flow or continuous flow. When patient P is using the oxygen concentrator **100** in the pulse flow mode, dispensing valve **160** will open intermittently in response to inhalation and will stay open for a pulse time according to the setting of the controls as set by patient P. If continuous flow is desired, dispensing valve **160** is maintained at an open or partially opened state. The product is dispensed to patient P though oxygen delivery tube **102** at a continuous rate, typically in the range of 1-1.5 lpm (liters per minute). The pressure difference corresponding to a dispensing orifice in delivery tube **102** will accommodate the flow rate from the reservoir **158**.

FIGS. **12***a*-**12***d* are various views of components contained inside of reservoir module **110**. FIG. **12***a* is a perspective view of accumulator **252**. FIG. **12***b* is a top view of accumulator **12***b*. FIGS. **12***c* and **12***d* are sectional views corresponding to the section lines in **12***b*. Contained within reservoir module **110** is oxygen accumulator **252** (comprising reservoir **158**, check valves **153** and **156**, and product control pump **154**), inlet port **261**, and outlet port **263**. Accumulator **252** receives separated product gas through inlet port **261**. Product inlet line **174** (shown in FIG. **10**) is connected to inlet port **261** and links product control pump **154** to separation cartridge **206** through main valve **140** to transport oxygen rich gas separated by cartridge **206**. Inlet port **261** connects to check valve **153** which allows product gas into product control pump **154**.

Product control pump **154** includes piston **262**, actuated by spring **264** within pump chamber **265**, which pushes separated oxygen-rich product gas into reservoir **158**. Check valve **156** opens to allow oxygen into the reservoir **158** and closes to prevent back flow of oxygen-rich gas when the desired pressure in reservoir **158** is attained. The low pressure of reservoir **158** exerts a force on check valve **156** to keep valve **156** closed. Reservoir **158** takes oxygen-rich gas produced by oxygen concentrator **100** and stores it at a low pressure above ambient until the product is required for use by patient P.

Product control pump **154** is driven by vacuum. Product control pump vacuum line **174** is connected to the vacuum drawn by vacuum pump **144** through main valve **140**. When a vacuum is drawn, the force draws piston **262** down to compress spring **264** which expands pump chamber **265**, and causes check valve **153** to open. Oxygen-rich gas from separation cartridge **206** flows through check valve **153** and enters pump chamber **265** in the volume created by the displacement of piston **262**. At the appropriate time in the cycle, valve **140** will interrupt the vacuum to product control pump **154**, and spring **264** will force piston **262** upwards. The movement of piston **262** will force oxygen rich gas in pump chamber **265** through check valve **156** and into reservoir **158**. At the same time, check valve **153** closes to prevent more gas from entering pump **154**. With this embodiment, no additional drive (other than the vacuum to pull piston **262** down and the spring force to move it up) is required for product control pump **154** which adds to the overall efficiency of the system.

In one embodiment, reservoir **158** has a capacity that is about four times larger than the size of the largest pulse provided by oxygen concentrator **100**. In one embodiment, extra volume is included to account for separated oxygen used as a back flow in adsorbent columns **130***a*-**130***c*. Specifically, main storage reservoir **158** for oxygen concentrator **100** can be designed according to the flow rates listed in Table 1. Storage reservoir **158** is 100 cc (cubic centimeters) to 400 cc in volume. Main storage reservoir **158** is maintained at a low pressure to provide delivery of the product gas to patient P through outlet **263** which is connected to final product dispensing line **202**. In one embodiment, the pressure is between 1 atm (ambient) and 1.5 atm. Also acceptable are pressures less than eight psi (55,158 Pa), with a pressure of two and one half to five psi (17,236 to 34,473 Pa) preferred. The low pressure of reservoir **158** allows oxygen concentrator **100** to be used in most areas where high pressure oxygen is banned. Also, low pressure requires less energy to fill reservoir **158**, which adds to the efficiency of the system by requiring a simpler pressurizing mechanism compared to high pressure systems.

Reservoir **158** contains pressure sensor **159** (such as a piezoresistive or capacitive sensor) that sends reservoir pressure signal **188** to ECM **148** (see FIG. **5**). ECM **148** adjusts the speed of the motor of drive **146** based on reservoir pressure signal **188** in combination with the current settings on user interface **114**. As patient P's respiratory rate increases for the current setting, more oxygen-rich gas from reservoir **158** is dispensed thus lowering the pressure of reservoir **158**. The drop in pressure is sensed and the system will react by increasing the production of product gas. Similarly, a decrease in the respiratory rate of patient P at the current setting of oxygen concentrator **100** raises the pressure in reservoir **158**. The rise in pressure is sensed and ECM **148** adjusts drive **146** accordingly to maintain a preset pressure range in reservoir **158**. Thus, only the amount of oxygen used by patient P is produced by oxygen concentrator **100**.

FIG. **13** is a perspective view of the control module **112**. Illustrated are the case **228** containing aperture **216***c* and socket **218***c*, and padding **236** and **234**. Control module **112** contains user interface **114** comprising power switch **266**, flow level indicator lights **268**, flow setting switches **270***a* and **270***b*, boost switch **272**, and indicator lights **274** and **276**. Power switch **266** is an ordinary toggle or push button switch capable of turning oxygen concentrator **100** on and off.

Flow settings are dually controlled by patient P utilizing flow setting switches **270**. First, continuous or pulse mode is selected by patient P. In a continuous flow mode, oxygen is dispensed at a continuous flow rate such as one to one and a half liters per minute. If oxygen concentrator **100** is set in a pulse mode for controlling flow, oxygen concentrator **100** utilizes dispensing valve **160** to provide pulse dispensing of product gas. The pulse mode is set to meet patient P=s needs for the equivalent of one to five liters per minute of continuous oxygen flow. In one embodiment, a dial containing settings of one to five is utilized. In the embodiment illustrated in FIG. **13**, flow setting switches are used to adjust the

flow rate between various stepped levels. Each setting corresponds to the specific value for continuous flow, or a corresponding pulse volume. For example, settings for a pulse mode are contained in the table below.

TABLE 1

Setting	Total Volume Pulse Range (cc/pulse)	Trigger Time (sec)	Pulse Flow Ramp Rate (sec)	Pulse Duration Max (sec)	Peak Pulse Flow (LPM)
1	10 to 12	.001 to .02	.03 to .07	.15	14
2	20 to 24	.001 to .02	.03 to .07	.20	14
3	30 to 36	.001 to .02	.03 to .07	.25	15
4	40 to 48	.001 to .02	.03 to .07	.30	16
5	50 to 60	.001 to .02	.03 to .07	.35	17

When the unit is set in pulse mode, product gas is dispensed only at the beginning of inhalation. In one embodiment, product dispensing valve **160** is only opened between zero and 0.4 seconds of the beginning of a breath of patient P. This controls the amount of oxygen removed from reservoir **158**. In another embodiment, oxygen concentrator **100** is shut off if no pressure drop is sensed by nasal pressure sensor **190** for a set amount of time, such as two minutes, which in turn closes dispensing valve **160**.

Patient P can temporarily increase (or Aboost@) the flow rate of oxygen by actuating boost control switch **272** on user interface **114**. When boost switch **272** is activated, oxygen concentrator **100** increases the flow rate of oxygen for a set period of time, such as 10 minutes. After timing out, oxygen concentrator **100** returns to the previous setting. The boost function will not work if oxygen concentrator **100** is already operating at the maximum flow rate.

Indicator light **274** indicates power pack **108** is running low. Indicator light **276** indicates that there is a problem with separation cartridge **206**, such as a bad connection with receptacle **208**. In one embodiment, oxygen concentrator **100** contains three different colored lights: red, yellow, and green. The green light indicates that there are no problems detected with oxygen concentrator **100**. A yellow flashing light or a yellow non-flashing light indicates a condition has been sensed that should be addressed. An example of such a condition is a low battery. A red flashing light indicates that a condition has been detected that requires an immediate response. A red non-flashing light indicates that oxygen concentrator **100** has failed, and has shut down. For example, if oxygen concentrator **100** fails to produce a stream of separated gas of eighty-five percent oxygen, oxygen concentrator **100** will detect this problem via breakthrough flow sensor **150**. ECM **148** shuts off main valve **140** so no ambient air **162** is being submitted to the gas separation cartridge **206**. Product gas is no longer being supplied to reservoir **158**. After a few breaths, reservoir **158** will empty, triggering reservoir pressure sensor output **188** (shown in FIG. **5**), which communicates to ECM **148** to shut down oxygen concentrator **100**, and display the red warning light. This signals patient P that maintenance is needed. In addition to the aforementioned indicator lights, the unit may also contain a boost indicator light to indicate when a boost function is in operation. Similarly, an audible alarm may be included in oxygen concentrator **100** to indicate failure.

FIG. **14** is a front view of the interior components of control module **112**. Illustrated are drive **146**, vacuum pump **144**, drive speed reducer **142**, and valve **140**. Drive **146** includes a DC motor, driven by battery power pack **108**, which supplies the necessary power to operate vacuum pump **144**. The motor draws a maximum of 15 watts of power. Vacuum pump **144** is a positive displacement pump. In this embodiment, drive **146** runs both vacuum pump **144** and valve **140**. Vacuum pump **144** is run by the motor at one speed, while valve **140** is run off the same motor but at a reduced speed. The reduction in speed is accomplished with gears that comprise drive speed reducer **142** between the motor of drive **146** and valve **140**.

Valve **140** is a valve containing a minimum number of ports equal to two times the number of adsorbent beds (columns) in separation cartridge **206**. Additionally, main valve **140** contains other ports for the inlet of ambient air **162**, vacuum provided by vacuum pump **144**, and recycling of product gas used to purge columns **130*a*-130*c*** during repressurization. In the preferred embodiment, valve **140** is a rotary valve, but may also be a solenoid valve, directional control valve, or series of individual valves in communication with each other and each connected to an adsorbent column **130*a*-130*c***.

In an alternate embodiment, drive **146** may contain an independent motor for operating valve **140**. If valve **140** is run by an independent motor, that motor is powered by power pack **108** and synchronized with the other motor(s) of drive **146** by ECM **148**. As illustrated, drive **146** contains a single motor and valve **140** is connected to a system of gears that comprise drive speed reducer **142**. Alternately, drive speed reducer **142** can be any common power transmission components such as pulley and belts, or gears and sprockets.

FIG. **15** is a perspective view of separation cartridge **206** contained within separation cartridge module **116**. Illustrated are inlet ports **132*a*-132*c***, outlet ports **134*a*-134*c***, and casing **230**. In the embodiment illustrated, three adsorption columns are contained within casing **230** with one inlet port **132*a*-132*c***, and one outlet port **134*a*-134*c***, for each adsorption column **130*a*-130*c***. Each adsorption column **130*a*-130*c*** is a hermetically sealed container containing a bed of adsorption material, preferably a zeolite capable of adsorbing nitrogen gas, such as lithium low silica 13× zeolite. Each bed contains between five and twenty-five cubic centimeters of material, and in one embodiment contains fifteen (plus or minus one) cubic centimeters of material. The adsorbent bead size is a thirty by sixty mesh, wherein thirty mesh is equal to 0.0234 inches (0.0594 cm) and sixty mesh is equal to 0.01 inches (0.0254 cm).

Column inlet ports **132*a*-134*c*** are connected to receive either ambient air **162** or vacuum, while outlet ports **134*a*-134*c*** expel product gas or receive purge gas. This arrangement promotes ordering of gases within the columns **130*a*-130*c*** by having oxygen rich gas always present at one end of the column. This results in improved efficiency as air flow through the columns **130*a*-130*c*** creates an oxygen rich zone continuously at one end, which allows the vacuum to evacuate and desorb the previously adsorbed nitrogen where it is contained in the greatest concentration.

FIG. **16** is a perspective view of the columns **130*a*-130*c*** and the filters **136** and **138** within casing **230** of separation cartridge **206**. Illustrated are final product filter **138** connected to product gas outlet port **103** which connects to tubing **102**, inlet air filter **136**, and adsorbent columns **130*a*-130*c*** each comprising spin inducers **280*a*-280*f***, adsorbent material **282*a*-282*c***, porous filters **284*a*-284*f***, and springs **286*a*-286*c***. Springs **286*a*-286*c*** are coil springs that hold each adsorbent column in compression **130*a*-130*c*** in place within casing **230** of separation cartridge **206** to prevent movement of adsorbent beads. Spin inducers **280*a*-**

280*f* help force even distribution of gases through columns **130***a*-**130***c*, which helps to keep the MTZ well defined for more accurate detection.

Adsorbent material **282***a*-**282***c* is the same as that previously described. Filters **136** and **138** are constructed of common filtering materials and are used to remove dust and other large particulate matter from the air streams to assure that the flow of oxygen out to patient P is free of such materials. Porous filters **284***a*-**284***f* are a small section of material commonly used as a particle filter provided at each end of columns **130***a*-**130***c*. Porous filters **284***a*-**284***f* act to prevent adsorbent particles from contacting the mechanisms and valving of concentrator **100**.

Docking Station **122** (FIGS. **17**-**18**)

FIG. **17** is a perspective view of the back side of oxygen concentrator **100** on docking station **122**. Illustrated are oxygen concentrator **100** comprising power module **106**, reservoir module **110**, control module **112**, and separation cartridge module **116**, belt **104**, and docking station **122** containing status display **288**. Status display **288** is an LED, LCD, or similar digital display used to provide information to patient P such as time of day, time the concentrator has been used, time of recharging for power pack **108**, or similar information. Additionally, docking station **122** may contain other controls (not illustrated) including a boost setting while the concentrator is docked, a mode switch for switching between pulse and continuous flow of oxygen, and indicator lights to show expected battery life, adsorbent column life, gas input, gas output, or gas separation system malfunctions, or other similar items that were previously described as part of user interface **114**.

FIG. **18** is a perspective view of the docking station **122** with oxygen concentrator **100** removed. Concentrator dock **126** is visible on docking station **122** with oxygen concentrator **100** removed. Concentrator dock **126** may optionally contain electrical connections (not illustrated) to charge power pack **108** contained within power module **106** while oxygen concentrator **100** is docked. Additionally, docking station **122** contains a power cord (not illustrated) available to connect to a wall socket or other power source such as a car utility plug. Docking station **122** uses power provided through the power cord to operate oxygen concentrator **100** and/or recharge power packs **108**. Docking station **122** contains a flat bottom **290** to rest on a level surface and allow oxygen concentrator **100** to be in the docking station without moving. Alternately, docking station **122** is mountable to a wall in one embodiment, and is a free standing device that is set on a generally flat surface in another embodiment.

In one embodiment, docking station **122** comprises indicator lights and control power switch (not illustrated) in addition to status display **288**, power pack chargers **124***a* and **124***b*, and concentrator dock **126**. Indicator lights provide information to patient P utilizing oxygen concentrator **100**. Indicator lights will indicate if oxygen concentrator **100** is functioning properly, requires maintenance, or has failed. Control switch is a master switch for supplying or terminating power or controlling the setting of flow for oxygen concentrator **100**. Status display **128** is an LED, LCD or similar digital display that can be used to indicate various information to patient P such as time of day, time oxygen concentrator **100** has been docked, time of recharging for the power pack, or similar information.

Docking station **122** also contains power pack chargers **124***a* and **124***b* and concentrator dock **126**. Docking station **122** contains a power cord (not illustrated) available to plug into a wall socket or a similar power pack. Docking station **122** converts AC power to recharge power pack **108** in power pack chargers **124***a* and **124***b*. Power pack chargers **124***a* and **124***b* contain contacts that are used to transfer power to power pack **108** while recharging. Alternatively, a power pack **108** placed in charger **124***a* or **124***b* is inductively coupled to recharge the power pack **108**. Similarly, power is provided to oxygen concentrator **100** itself while on docking station **122**, and to recharge of the power pack **108** (see FIG. **4**) still attached to the oxygen concentrator **100**. Concentrator dock **126** is shaped to provide a place to set oxygen concentrator **100** while docked, as well as facilitate easy removal of oxygen concentrator **100** for ambulatory use.

In one embodiment, docking station **122** performs several functions with oxygen concentrator **100** docked. First, oxygen concentrator **100** is allowed to run without utilizing power pack **108** while it is docked. Second, a boost setting is available to increase the delivery rate of oxygen while oxygen concentrator **100** is docked. Boost switch **272** is located on user interface **114** (See FIG. **13**). In an alternate embodiment, a boost switch is located on docking station **122**. Upon removal of oxygen concentrator **100** from docking station **122**, the boost setting is removed and oxygen concentrator **100** operates at a set delivery rate in either a continuous or pulse mode.

Oxygen concentrator **100** contains flow setting switch **270** (FIG. **13**), and a mode switch (not illustrated). The mode switch allows patient P to select continuous or pulse flow. In one embodiment, patient P is allowed to adjust the setting of oxygen concentrator **100** only while docked. That is, patient P can reprogram by changing a pulse setting (e.g., from 2 to 3), or continuous flow mode (e.g., from 1.0 to 1.5 liters per minute), only while oxygen concentrator **100** is on docking station **122**. Patient P wishing to adjust settings will be required to hold the control switch while adjusting the flow setting dial or mode switch. In another embodiment, docking station **122** contains a switch automatically activated by placing oxygen concentrator **100** in docking station **122** which allows patient P to adjust flow setting. The requirement that settings can only be changed during docking prevents accidental switching of the flow mode of oxygen concentrator **100** during ambulatory use. For example, there is no change in flow if flow setting switch **130** is bumped, which would normally increase oxygen flow. If oxygen concentrator **100** can only be reprogrammed in docking station **122**, oxygen concentrator **100** will remain in the preset mode set at docking station **122** and will not increase or decrease flow by a change of the setting. In one embodiment, the flow setting switch and mode switch are located on a user interface located directly on docking station **122**.

Another function of docking station **122** is to provide diagnostic features of the system. Docking station **122** may indicate expected battery life, adsorbent column life, or pump malfunctions through the use of indicator lights, or status display **128**, or a combination of both. Alternatively, these items are located on user interface **114**, or at a combination of locations of user interface **114** and docking station **122**. For example, battery life indicator **142** is located directly on power pack **108** that comprises the battery itself, and battery problem warning light **274** is on user interface **114** also. Similarly, adsorbent cartridge warning light **276** is located on user interface **114**, but may also be on either the cartridge module **116** or docking station **122** as well.

Concentrator Efficiency

Oxygen concentrator **100** can produce a stream of product gas containing a range of 85-95 percent oxygen which provides up to 5 liters per minute pulsed equivalent of

product gas. By utilizing vacuum swing adsorption, the separation process phases are all performed at less than 1 atm.

Utilizing a vacuum to exhaust unwanted gas from adsorbent columns **130***a*-**130***c* improves efficiency of the oxygen concentrator **100**. Less power is required than pressure swing adsorption (PSA) or vacuum-pressure swing adsorption (VPSA), which results in a smaller battery and thus a lighter weight product. Oxygen concentrator **100** as disclosed weighs less than 3 pounds (1.4 kg) and occupies less than 1 liter of volume. Also, the efficiency of the system allows for oxygen concentrator **100** to operate for at least three hours while producing up to 5 liters per minute pulsed equivalent of product gas without requiring patient P to attend to the unit, e.g. changing the battery. Further, the low energy consumption causes less heat transfer. The product gas is discharged from the separation system at a temperature of ±six degrees Celsius from that of the ambient air. This eliminates the need for heat exchangers which add to the overall weight and reduces system efficiency. The amount of heat generated causes no discomfort to patient P wearing and utilizing the oxygen concentrator **100**. Also, upon starting oxygen concentrator **100**, the flow of product gas will increase from 21 percent oxygen (ambient) to 85 percent or more oxygen in under two minutes.

Improvements over the prior art are attained by regulating the device to only separate the amount of oxygen needed by patient P at any given time. The prior art separates a flow of oxygen and delivers that rate to patient P as a steady flow. Patient P is only inhaling this oxygen during about ⅓ of the normal breathing cycle. Within the inhalation portion of the breathing cycle, the volume of gas inhaled last stays in the dead space of the airways and is not presented to the alveoli. Therefore if oxygen is dispensed to patient P only during the early part of inhalation, less than ⅓ the steady flow is actually required. Moreover, prior art devices do not adjust the flow based on a patient P=s needs, but operate at the same steady flow. The present concentrator slows down its entire cycle rate producing only the amount of oxygen needed. Thus, oxygen concentrator **100** retains a high oxygen recovery percentage at all product flow rates while minimizing energy consumption and maximizing adsorbent life. Patient P=s actual needs vary with real time changes in activity. This causes a corresponding variation in breathing rate. Oxygen concentrator **100** tracks patient P=s breathing rate and adjusts oxygen separation and delivery rates proportionally. In combination, these two features allow oxygen concentrator **100** to separate oxygen only at the rate it is being consumed, resulting in a reduction in the amount of oxygen needing to be separated for patient P.

Another improvement over the prior art involves reducing the waste of separated oxygen in the various adsorb and desorb cycle phases. This is typically referred to as maximizing product recovery. The primary system components become larger or smaller as the amount of oxygen separated increases or decreases. Therefore, a dramatic reduction in size and weight of the concentrator requires use of as much separated oxygen as possible by delivering it to patient P rather than losing it to the waste stream. The prior art works by using the Skarstrom cycle well known to those skilled in the art.

During one phase of the Skarstrom cycle in PSA or VPSA, air is pumped into one end of a column of adsorbent pressurizing it above atmospheric pressure while oxygen is flowing out of the opposing end. Nitrogen is being adsorbed as the MTZ propagates toward the oxygen outlet end of the column. This phase is terminated before the MTZ breaks through into the oxygen stream so that oxygen purity is not diluted by the nitrogen rich air trailing the MTZ. If it is terminated earlier than necessary to maintain purity there will be substantial separated oxygen left in the column in front of the MTZ that is not passed to the patient. During the next cycle phase the column pressure is reduced to a lower cycle pressure desorbing the nitrogen that was adsorbed during the separation phase and it is passed to the waste stream. Some of the oxygen left in the column at higher pressure will also be passed to the waste stream as gas flows from the column when pressure is reduced. Recovery of separated oxygen can therefore be maximized by stopping the previous separation phase just short of breakthrough, leaving minimal oxygen in the column to be lost to the waste stream during the reduced pressure evacuation phase. The position of the MTZ needs to be accurately known to terminate the separation phase for optimal recovery without compromising purity. This position cannot be accurately estimated because its propagation rate is a function of many variables including product oxygen flow rate, high and low cycle pressures, temperature, adsorbent water content and the amount of other contaminants accumulated in the adsorbent. Prior art systems stop the separation phase well short of breakthrough to encompass worst case operating conditions without sacrificing purity and thereby waste separated oxygen in the evacuation phases during most typical non-worst case operating conditions.

Oxygen concentrator **100** determines the position of the MTZ just prior to breakthrough and terminates the flow from outlet **134** for the remainder of the feed phase or adjusts the motor speed, as previously described. Additional oxygen is left in the column at the end of a feed phase and is wasted during the evacuation phases. This is oxygen adsorbed by the adsorbent combined with oxygen present in the interstitial and dead spaces of the adsorbent and column. All adsorbents used in oxygen separators adsorb nitrogen, and also oxygen to some extent. The adsorbent used in oxygen concentrator **100** presents a very high ratio of adsorbed nitrogen to adsorbed oxygen. As the amount of oxygen adsorbed is minimized through the choice of an adsorbent with a low affinity for oxygen, the amount of adsorbent needed to separate a given amount of nitrogen during a separation phase will decrease as its affinity for nitrogen increases. The less adsorbent needed to adsorb a given amount of nitrogen, the less adsorbent there is to adsorb oxygen and the smaller the column can be with less interstitial and dead space.

For example, a LiLSX adsorbent referred to as Oxysiv MDX from UOP Corporation has a very high ratio of adsorbed nitrogen to adsorbed oxygen in the operating pressure range of oxygen concentrator **100**. The Skarstrom cycle of the prior art uses a purge phase in which separated oxygen is fed back into the product end of the column while nitrogen rich gas is passing out of the opposing end of the column into the waste stream as the pressure transitions to the lower cycle pressure. While this purge can enhance product purity, some of the purge oxygen passes all the way through the column and is lost to the waste stream. Oxygen concentrator **100** using VSA achieves a measured 60% oxygen recovery rate, compared to a typical recovery rate of 30% for the prior art utilizing PSA.

Another improvement over the prior art concerns the choice of adsorbent and operating pressure range. The energy required by the separation process directly defines the weight and size of major components such as the battery, motor and gas pump of a concentrator. Minimizing the amount of adsorbent minimizes the amount of energy

needed to separate a given amount of oxygen. Each adsorbent has a characteristic pair of isotherms that show the amount of oxygen and nitrogen a given mass of adsorbent will hold at equilibrium over a range of pressures and vacuums for these gasses at a constant temperature. The cycle phases of the system necessarily include the pumping of gas contained in volumes of adsorbent to produce a change in nitrogen partial pressure between a chosen higher pressure and a chosen lower pressure. The pneumatic energy a pump must deliver in the process of cycling a given volume of gas between a higher and a lower level is in direct proportion to the volume of gas pumped multiplied by the difference between the high and low vacuum levels. The isotherms for various adsorbent candidates specify the amount of nitrogen contained in a fixed mass of adsorbent at a fixed temperature as a function of nitrogen partial pressure.

An example of the isotherm for the LiLSX adsorbent Oxysiv MDX along with the isotherm for a typical 13× type adsorbent used in the prior art is shown in FIG. **19**. Having minimized the amount of oxygen needed to be separated from air and having maximized the recovery percent of oxygen as previously disclosed, along with knowing the percentage of oxygen present in air prescribes a specific minimum amount of air that must be moved into the system to produce the needed oxygen. This minimum amount of air minus the maximized separated oxygen must pass out of the system as a minimized volume of waste gas. Oxygen concentrator **100** acts to minimize the flow rates of the air feed stream and the waste stream. This flow must be pumped across a pressure difference defined by the choice of high and low operating pressures requiring a pumping energy that is proportional to both the flow rate and the pressure difference. The gas streams are pumped into or out of the adsorbent during each complete cycle to produce the needed swing in pressure between high and low cycle pressure levels allowing the separation of nitrogen from oxygen. Minimizing the amount of gas being pumped through the system reduces the pumping energy in proportion to reductions in the difference between chosen high and low pressure points that the gas must be pumped across. The isotherm for nitrogen shows that nitrogen is transferred in or out of the adsorbent with the smallest change in pressure where the slope of the isotherm is the steepest. Using typical PSA, a ratio of high to low pressure levels in these systems needs to be 3:1 or greater to maintain the desired oxygen purity. Lower pressure ranges, i.e. sub-atmospheric or vacuum ranges used in VSA, allow this ratio to be maintained with less total difference between the high and low pressure levels.

For example, prior art operates between 1 and 3 atmospheres for a 3:1 ratio and a pressure difference between high and low levels of 2 atmospheres. Oxygen concentrator **100** using VSA operates between 0.3 atmospheres and 1 atmosphere. A ratio of about 3.3:1 is achieved with a pressure difference of only 0.7 atmospheres. Operating on this range of the isotherm as seen in FIG. **19** allows just as much nitrogen to be passed in and out of the LiLSX adsorbent with a 0.7 atmosphere pressure range as a PSA system does with 13× adsorbent and a 2.0 atmosphere pressure range. The LiLSX adsorbent allows a cycle pressure range that is nearly ⅓ that of a PSA system with a proportional reduction in pumping energy.

Oxygen concentrator **100** is a quiet device. When oxygen concentrator **100** is running, it produces a noise level in the range of ten to thirty decibels. Further, with the compact size of the parts, vacuum pump **144** is running continuously and there is very little vibration to affect a person using it docked or wearing it as an ambulatory device. The device of the present invention with the described components weighs less than three pounds (1.36 kg). The compact size (less than about 61 cu. in. (1000 cc)) allows for easy portability. Similarly, the small size does not disrupt counter space or storage when used at home. The device does give off some heat, however the outer case is less than 6 degrees Celsius higher than ambient when oxygen concentrator **100** is running on battery power. The device may emit more heat while it is docked and operating on AC power to charge the power pack **108**, but is still less than 15 degrees Celsius above ambient.

Based on the foregoing embodiments, the efficiency of the concentrator can be determined. One measure of efficiency is the ratio of oxygen produced to the amount of adsorbent material used to obtain the oxygen, represented by the following:

Qp=Liter/min O_2 produced

Madsorbent=Kg of Adsorbent Material

for example, the disclosed embodiments include adsorbent columns **130*a*-130*c***, with each column containing 15 cubic centimeters (cc) of adsorbent material with a density of 0.66 gm/cc. That is:

$$(3\text{columns})\left(\frac{15\text{ cc}}{\text{column}}\right)\left(\frac{0.66\text{ gm}}{\text{cc}}\right) = 30\text{ gms}$$

for the system.

The following flow rates (Qp) were obtained by the above disclosed concentrator:

Qp max=1.5 L/min

Qp min=0.14 L/min

This results in a range for kilograms of adsorbent material to oxygen flow rate of:

$$0.020 < \frac{Madsorbent}{Qp} < 0.214$$

Similarly, flow rates (Qp) were determined for a system that contains three adsorption columns, each column containing 15 cc of adsorbent material. The separation completed in a range of 0.3 atm to 0.95 atm. Values were calculated for breakthrough time, work, battery life, and flow rate. The volume of gas contained in a column at the end of a feed phase was 150 cc. These constants were used to determine the following measures of efficiency:

Work per evacuation cycle or pneumatic power requirements were determined based on the following calculations:

W (work)=(volume moved)*(vacuum differences);

The vacuum differences are calculated as the vacuum pump is continuously changing gas out, and as vacuum progresses to end point. From this:

V_H=Vacuum upper level

V_L=Vacuum lower level

Vol=Volume of gas in the column at end of feed phase

$W=Vol*(V_H-V_L)*(1+(V_H/(V_H-V_L))*\ln(V_L/V_H)+\ln(V_H/V_L)$

Inserting the above constants and converting to joules (multiply by 100.32 to get L*atm to joules) yields:

W=4.81 joules

Thus, 4.81 joules is required to evacuate the gas which desorbs during the evacuation phase. From experimentation, the following flow rates (LPM is liters per minute) and cycle times were recorded:

Qp (flow rate)

Low=0.14 LPM

Med=0.720 LPM

High=1.5 LPM

Cycle time

Low=5.6 sec.

Med=1.12 sec.

High=0.54 sec.

Power consumption can be determined by calculating work divided by the time of the cycle.

Low flow power=4.81 joule/5.6 sec=0.85 watts

Medium Flow power=4.81 joule/1.12 sec=4.29 watts

High flow power=4.81 joule/0.54 sec=8.9 watts

From the above, a measure of energy consumed to the flow rate can be made and used as an indicator of the system efficiency:

$$\text{Low: } \frac{.85\text{ w}}{.14\text{ LPM}} = 6.07\text{ w/LPM}$$

$$\text{Medium: } \frac{4.29\text{ w}}{.72\text{ LPM}} = 5.95\text{ w/LPM}$$

$$\text{High: } \frac{8.9\text{ w}}{1.5\text{ LPM}} = 5.93\text{ w/LPM}$$

Another measure of efficiency is the ratio of mass of the power pack (Mpowerpack) compared to the amount of oxygen produced (Qp) over time:

$$\frac{Mpowerpack}{QpT(\text{time})}$$

The following constants are used in the calculation: the battery cell is a type 18650 lithium ion battery with 7.4 watts-hrs, measuring 42 g; motor efficiency is 90 percent; and vacuum pump efficiency is 80 percent.

Pneumatic work=6 W/L/min. Thus,

$$\text{Electric power} = \frac{6\text{ W/LPM}}{(.9)(.8)} = 8.3\text{ W/LPM}$$

Battery mass compared to energy consumption is:

$$\frac{42\text{ g}}{7.4(\text{watt})(\text{hr})}\left(\frac{1\text{ Kg}}{1000\text{ g}}\right)\frac{8.3\text{ watt}}{\text{LPM}} = .047\frac{\text{Kg}}{\text{LPM(HR)}}$$

Total battery mass for the power pack can be determined from this equation. For example, if a patient requires the concentrator to run for four hours at setting of A3" and takes 20 breaths per minute (the medium flow rate):

$$(4\text{ hr}) * \frac{.047\text{ kg}}{\text{LPM(hr)}}.72\text{ LPM} = .135\text{ kg}$$

The mass of the batteries needed is 0.135 Kg. Assuming each battery cell is 42 g as previously stated, the number of batteries for the power pack can be calculated:

$$.135\text{ kg}\left(\frac{1000\text{ g}}{1\text{ kg}}\right)\frac{\text{battery cell}}{42\text{ g}} = 3.2\text{ battery cells}$$

Although the present invention has been described with reference to preferred embodiments, workers skilled in the art will recognize that changes may be made in form and detail without departing from the spirit and scope of the invention. For example, larger flow rates may be achieved by scaling the concentrator components to achieve desired flow rates at the disclosed efficiencies.

The invention claimed is:

1. A portable oxygen concentrator, comprising:

a separation cartridge selectively removable from a receptacle by movement relative to the receptacle in a first direction, the separation cartridge comprising an inlet oriented in a second direction opposite the first direction, an outlet oriented in the second direction, and a bed of adsorbent material configured to preferentially adsorb nitrogen;

wherein a first line extending parallel to the first and second directions passes through the outlet,

wherein a second line spaced-apart from the first line and extending parallel to the first line passes through the inlet, and

wherein the separation cartridge is configured such that, when fluid flows through the separation cartridge, fluid flowing along the first line contacts the adsorbent material of the bed and fluid flowing along the second line does not contact the adsorbent material of the bed.

2. The portable oxygen concentrator as recited in claim **1**, wherein:

the outlet is arranged adjacent a first end of the bed, and adjacent a second end of the bed opposite the first end, the separation cartridge includes a spring configured to hold the bed in place.

3. The portable oxygen concentrator as recited in claim **2**, wherein:

adjacent the second end of the bed, the separation cartridge includes a porous filter, and

the spring contacts the second end of the bed via the porous filter.

4. The portable oxygen concentrator as recited in claim **1**, further comprising:

a power pack removable from the portable oxygen concentrator;

a pump electrically coupled to the power pack, the pump operable to cause a flow of fluid to move relative to the bed of adsorbent material;

a user interface configured to allow a patient to adjust and monitor operation of the portable oxygen concentrator; and

a carrying device for transporting the portable oxygen concentrator.

5. The portable oxygen concentrator as recited in claim **1**, wherein the bed comprises a bed of zeolite which provides preferential adsorption of nitrogen.

6. The portable oxygen concentrator as recited in claim **5**, wherein the zeolite is an LiLSX adsorbent.

7. The portable oxygen concentrator as recited in claim **1**, wherein the first and second lines are straight lines.

8. The portable oxygen concentrator as recited in claim **1**, wherein the separation cartridge is configured such that, when fluid flows through the separation cartridge, fluid flows along the first line in the second direction and fluid flows along the second line in the first direction.

9. The portable oxygen concentrator as recited in claim 1, wherein the separation cartridge includes at least one additional outlet oriented in the second direction and spaced-apart from the second line.

10. The portable oxygen concentrator as recited in claim 1, wherein the first line intersects adsorbent material of the bed and the second line does not intersect adsorbent material of the bed.

11. The portable oxygen concentrator as recited in claim 1, wherein the inlet is configured to receive ambient air and the outlet is configured to expel product gas.

12. A separation cartridge for a portable oxygen concentrator, comprising:

an inlet oriented in a direction;

an outlet oriented in the direction;

a bed of adsorbent material configured to preferentially adsorb nitrogen; and

wherein a first line extending parallel to the direction passes through the outlet,

wherein a second line spaced-apart from the first line and extending parallel to the first line passes through the inlet, and

wherein the separation cartridge is configured such that, when fluid flows through the separation cartridge, fluid flowing along the first line contacts the adsorbent material of the bed and fluid flowing along the second line does not contact the adsorbent material of the bed.

13. A portable oxygen concentrator, comprising:

a first bed of adsorbent material configured to preferentially adsorb nitrogen;

a first inlet oriented in a direction, wherein the first inlet is configured to direct a flow of ambient air to the first bed;

a first outlet oriented in the direction, wherein the first outlet is configured to expel product gas flowing downstream of the first bed;

a second bed of adsorbent material configured to preferentially adsorb nitrogen;

a second inlet oriented in the direction, wherein the second inlet is configured to direct a flow of ambient air to the second bed;

a second outlet oriented in the direction, wherein the second outlet is configured to expel product gas flowing downstream of the second bed;

a power pack removable from the portable oxygen concentrator;

a pump electrically coupled to the power pack, the pump operable to cause a flow of fluid to move relative to the first and second beds of adsorbent material;

a user interface configured to allow a patient to adjust and monitor operation of the portable oxygen concentrator;

a carrying device for transporting the portable oxygen concentrator;

wherein a first line extending parallel to the direction passes through the first outlet,

wherein a second line spaced-apart from the first line and extending parallel to the first line passes through the first inlet,

wherein the portable oxygen concentrator is configured such that, during use, fluid flowing along the first line contacts the adsorbent material of the first bed and fluid flowing along the second line does not contact the adsorbent material of the first bed,

wherein a third line extending parallel to the direction passes through the second outlet,

wherein a fourth line spaced-apart from the third line and extending parallel to the third line passes through the second inlet, and

wherein the portable oxygen concentrator is configured such that, during use, fluid flowing along the third line contacts the adsorbent material of the second bed and fluid flowing along the fourth line does not contact the adsorbent material of the second bed.

14. The portable oxygen concentrator as recited in claim 13, wherein the portable oxygen concentrator is configured such that, during use:

fluid flows along the first line in the direction,

fluid flows along the second line opposite the direction,

fluid flows along the third line in the direction, and

fluid flows along the fourth line opposite the direction.

15. The portable oxygen concentrator as recited in claim 14, wherein:

the first outlet is arranged adjacent a first end of the first bed,

a first spring is arranged adjacent a second end of the first bed opposite the first end,

the first spring is configured to hold the first bed in place,

the second outlet is arranged adjacent a first end of the second bed,

a second spring is arranged adjacent a second end of the second bed opposite the first end, and

the second spring is configured to hold the second bed in place.

16. The portable oxygen concentrator as recited in claim 13, wherein the first and second beds are contained within a common separation cartridge.

* * * * *