US006311719B1

(12) **United States Patent**
Hill et al.

(10) **Patent No.: US 6,311,719 B1**
(45) **Date of Patent: Nov. 6, 2001**

(54) **ROTARY VALVE ASSEMBLY FOR PRESSURE SWING ADSORPTION SYSTEM**

(75) Inventors: **Theodore B. Hill**, San Diego; **Charles C. Hill**, Del Mar; **Adam C. Hansen**, San Diego, all of CA (US)

(73) Assignee: **Sequal Technologies, Inc.**, San Diego, CA (US)

(*) Notice: Subject to any disclaimer, the term of this patent is extended or adjusted under 35 U.S.C. 154(b) by 0 days.

(21) Appl. No.: **09/371,464**

(22) Filed: **Aug. 10, 1999**

(51) **Int. Cl.**[7] **B01D 53/047**; F16K 11/085

(52) **U.S. Cl.** **137/312**; 95/96; 95/130; 95/138; 96/124; 96/130; 96/133; 137/240; 137/625.17; 137/625.46

(58) **Field of Search** 137/240, 312, 137/596.17, 625.17, 625.42, 625.46, 625.66; 95/96, 98, 130, 138; 96/124, 130, 133, 144, 149

(56) **References Cited**

U.S. PATENT DOCUMENTS

Re. 35,099	11/1995	Hill	95/98
5,268,021	12/1993	Hill et al.	95/98
5,366,541	11/1994	Hill et al.	95/96
5,807,423	9/1998	Lemcoff et al.	95/96
5,814,130	9/1998	Lemcoff et al.	95/96
5,814,131	9/1998	Lemcoff et al.	95/96

Primary Examiner—George L. Walton
(74) *Attorney, Agent, or Firm*—Lyon & Lyon LLP

(57) **ABSTRACT**

The present invention relates to a rotary valve assembly for a pressure swing adsorption system. The rotary valve assembly includes a first valve member and a second valve member relatively rotatable about a common center of rotation to provide valving action for selectively transferring fluids therethrough. The second valve member has a first fluid section with at least one aperture adapted for transferring a first fluid of a first pressure and composition therethrough and a second fluid section with at least one aperture adapted for transferring a second fluid of a second pressure and composition therethrough. The first valve member has a first fluid section with at least one passage for transferring the first fluid in the valve assembly and a second fluid section with at least one passage for transferring the second fluid in the valve assembly. A vent is located between the first fluid sections and the second fluid sections of the valve assembly and is vented to a pressure lower than the pressures of the first and second fluids so as to vent leakage from either of the sections of the valve assembly. The rotary valve assembly further includes means for effecting relative rotation of the first valve member and second valve member.

24 Claims, 10 Drawing Sheets

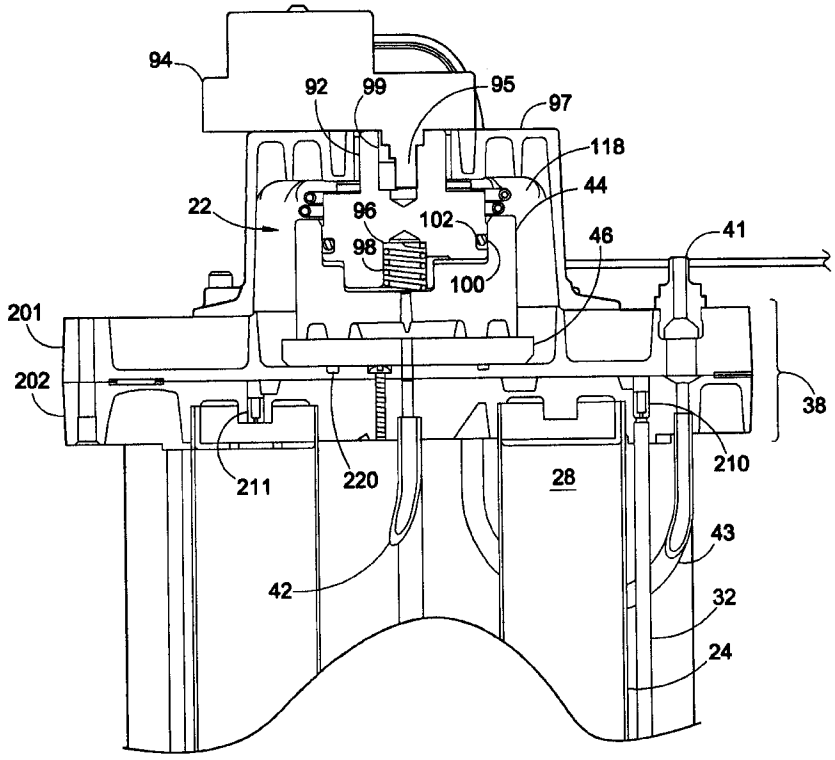

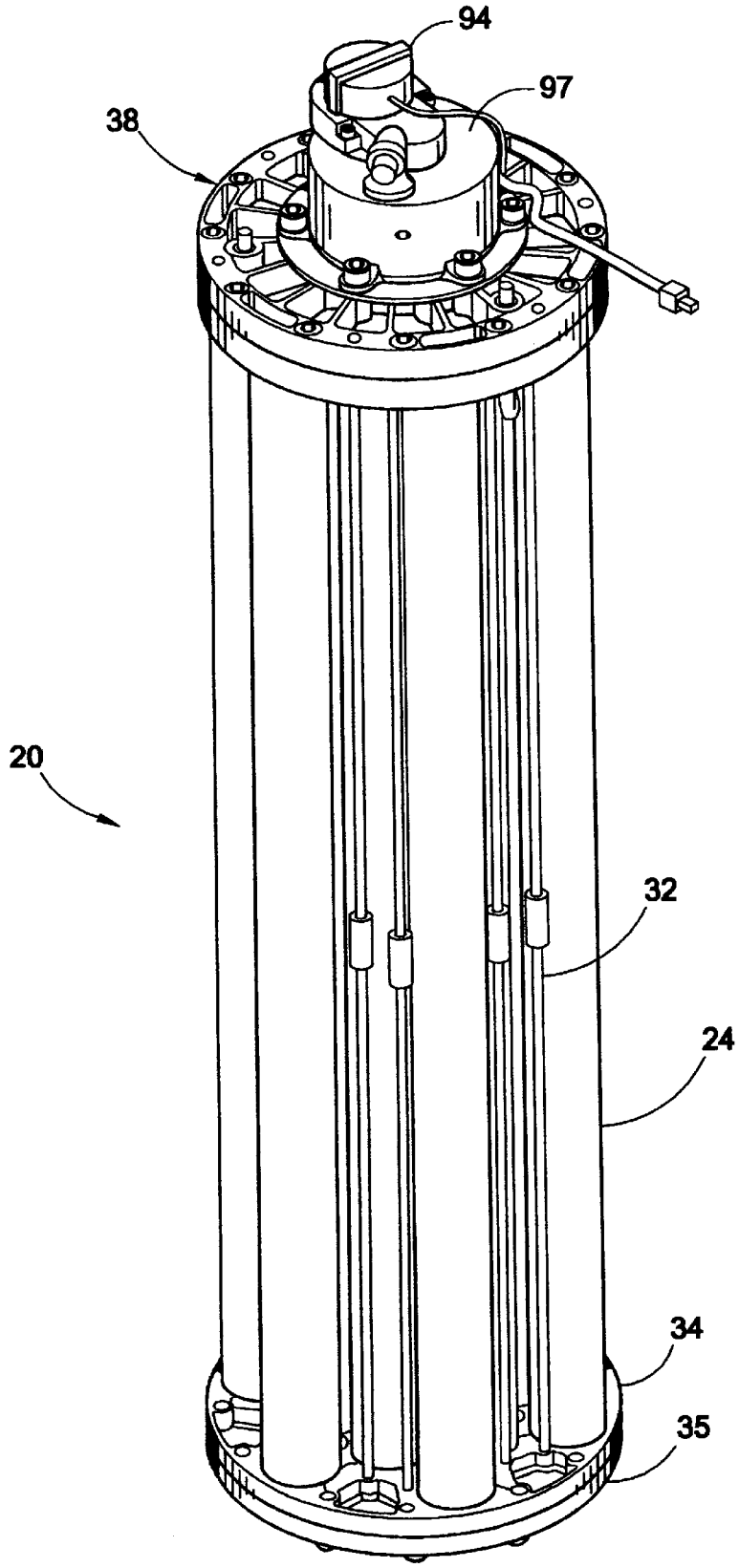

FIG. 1A

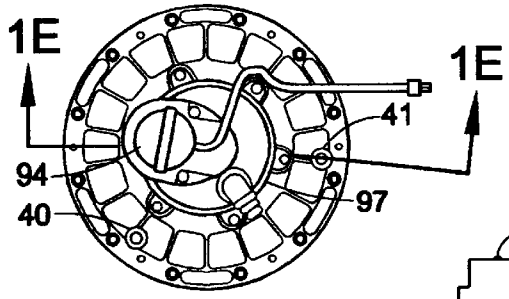

FIG. 1C

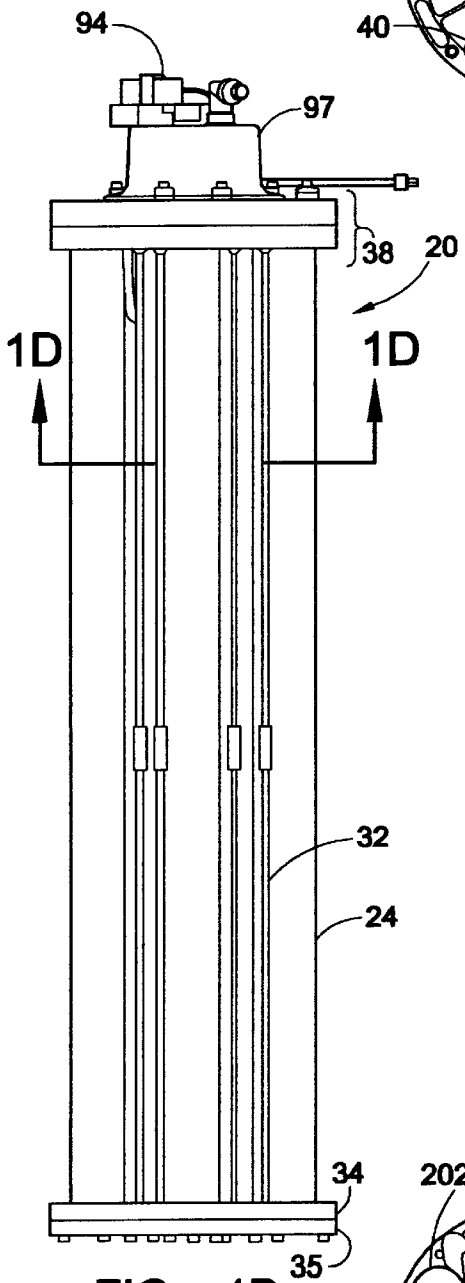

FIG. 1B

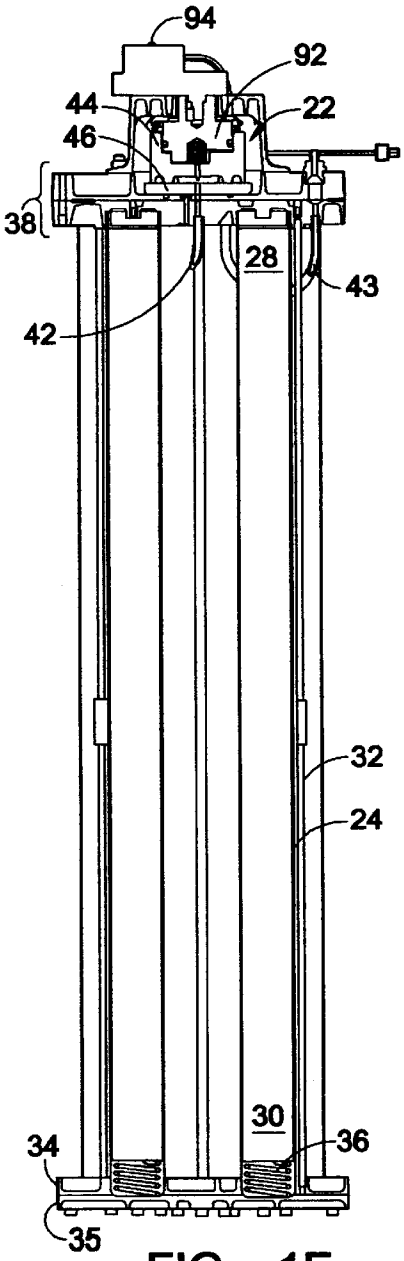

FIG. 1E

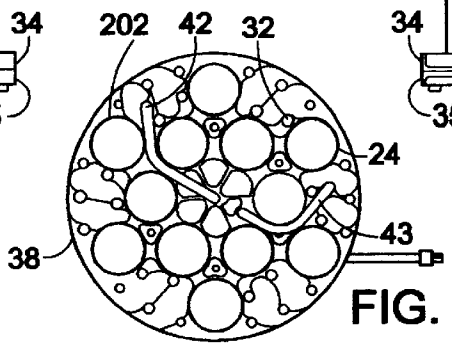

FIG. 1D

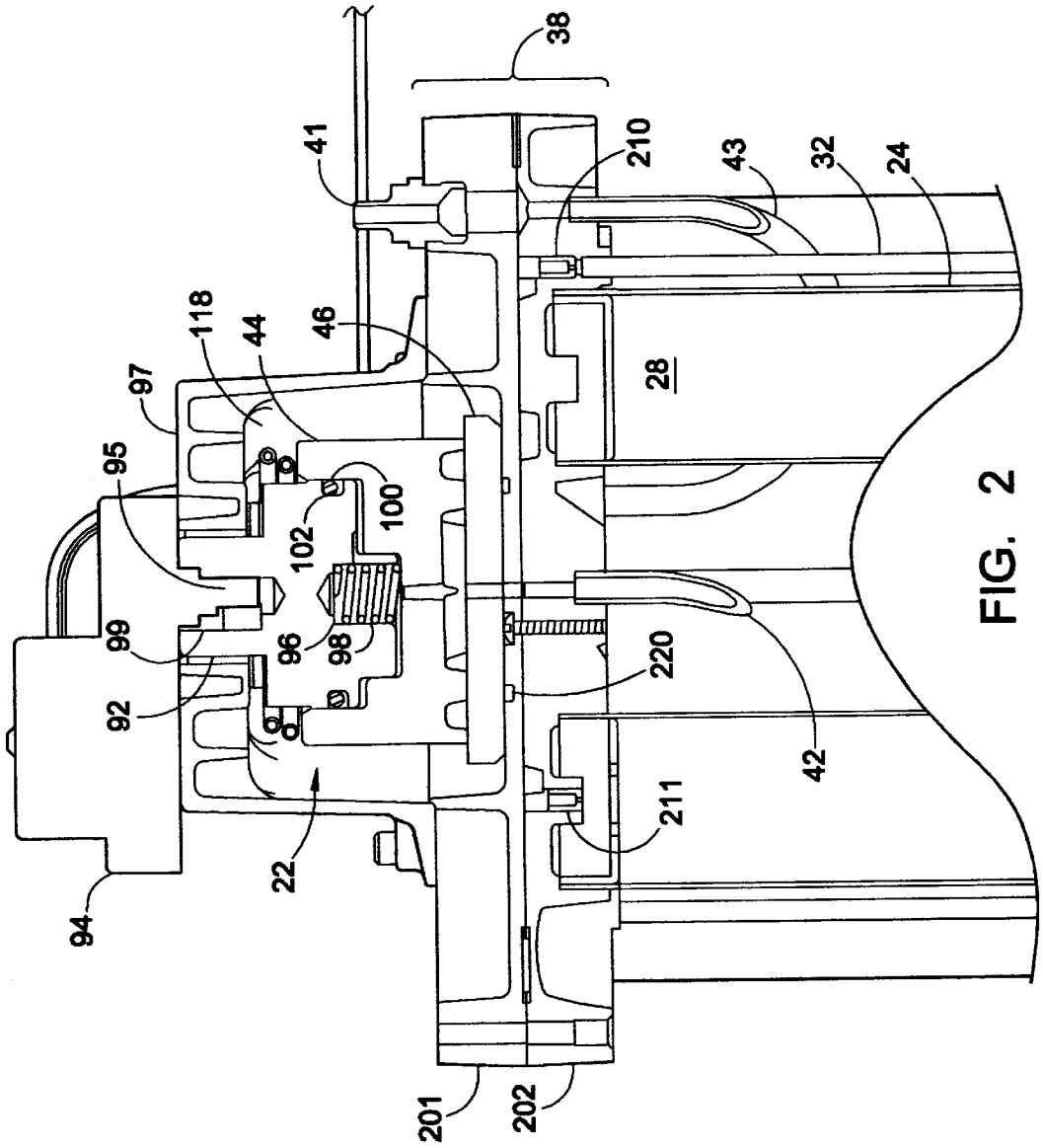
38
41
210
43
32
24
118
44
46
97
28
95
100
102
99
96
98
220
92
42
211
22
94
201
202

FIG. 2

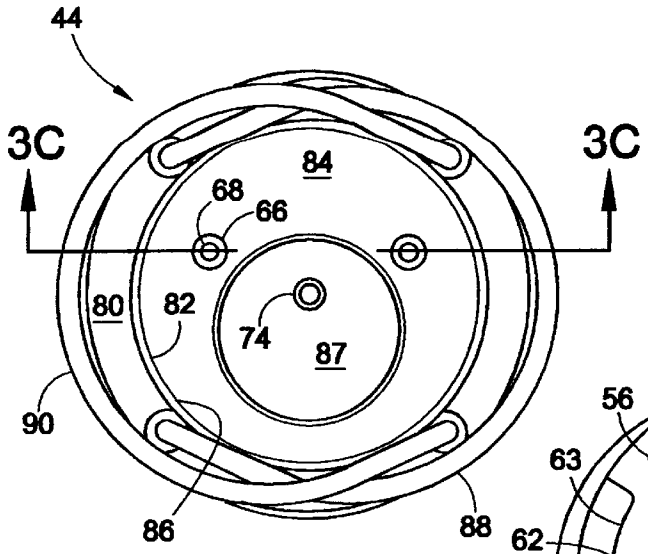

FIG. 3B

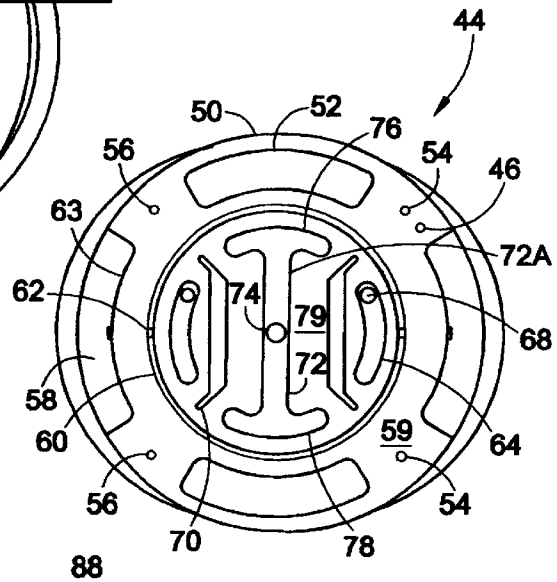

FIG. 3D

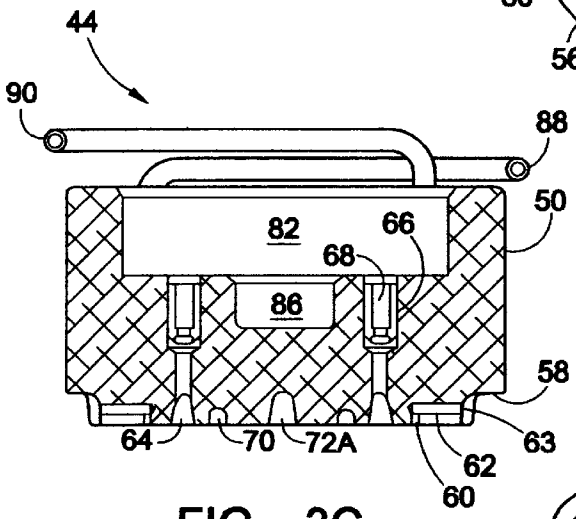

FIG. 3C

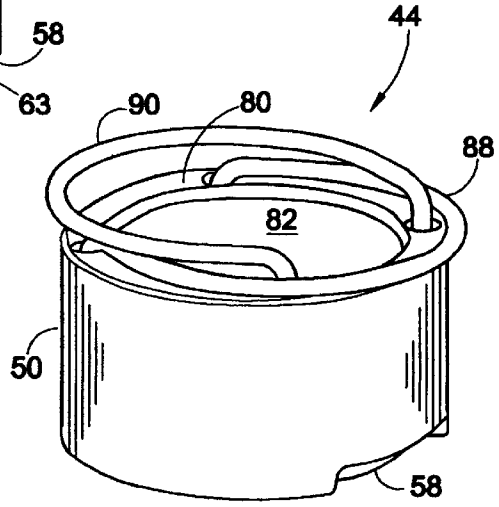

FIG. 3A

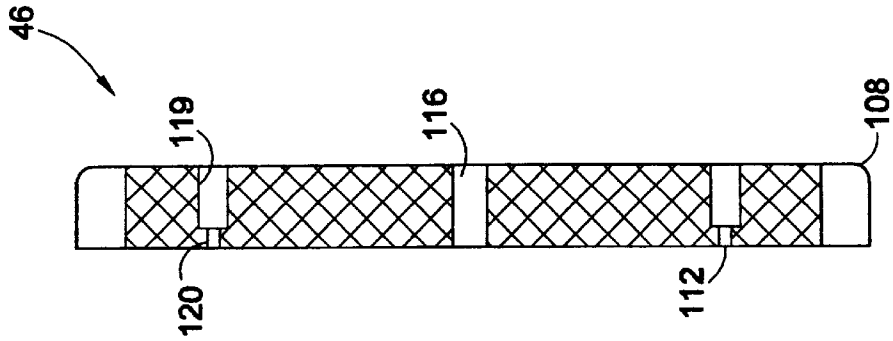
46
119
120
116
112
108

FIG. 4B

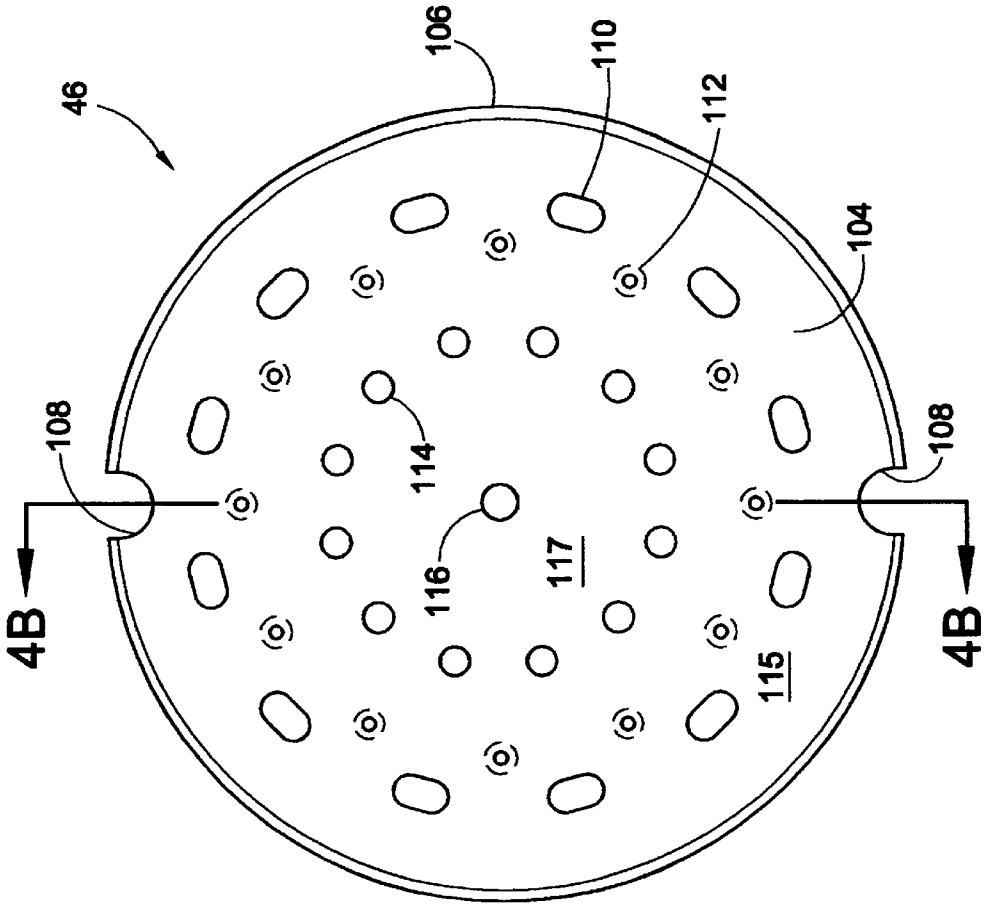
46
106
110
112
104
108
114
116
117
115
4B
4B

FIG. 4A

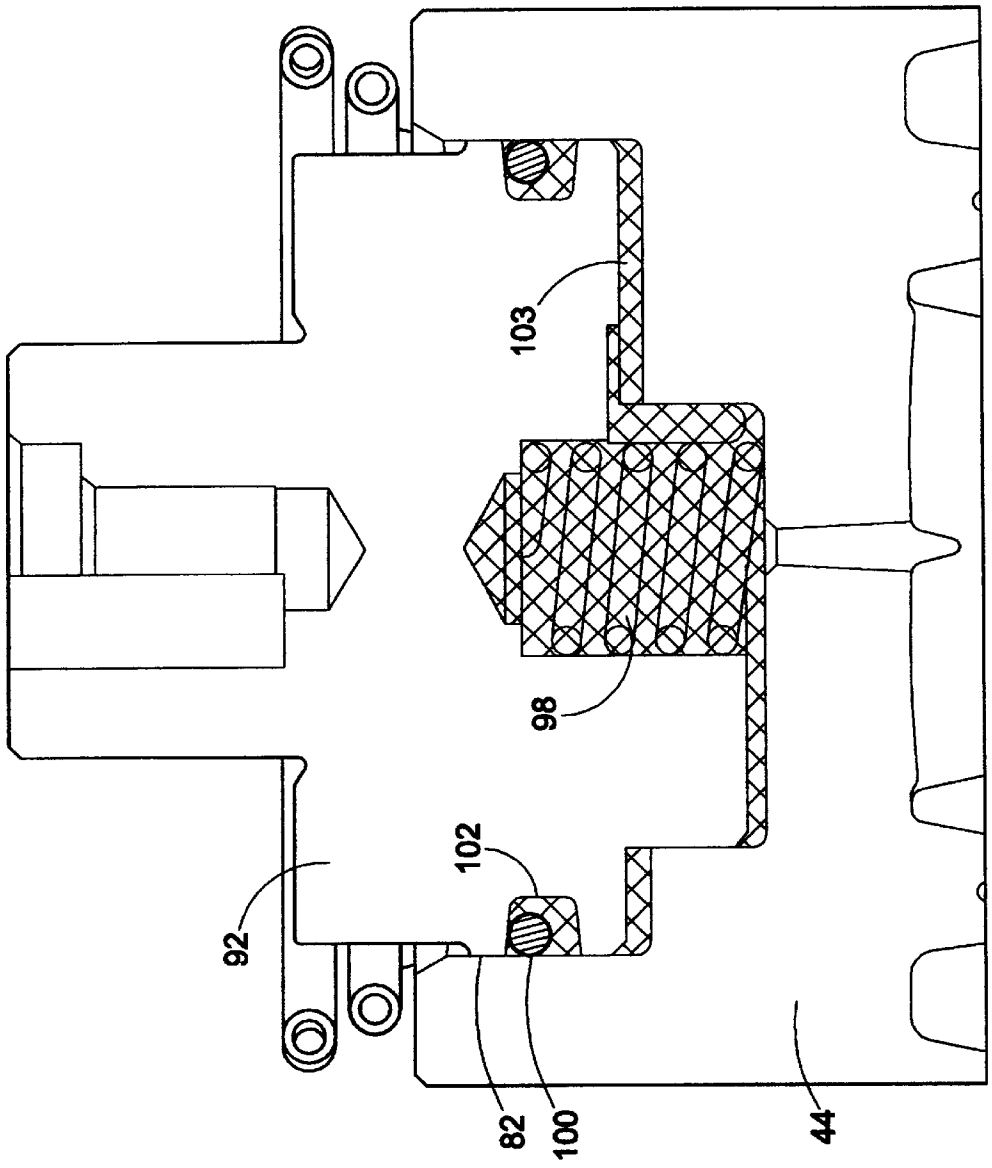

FIG. 5

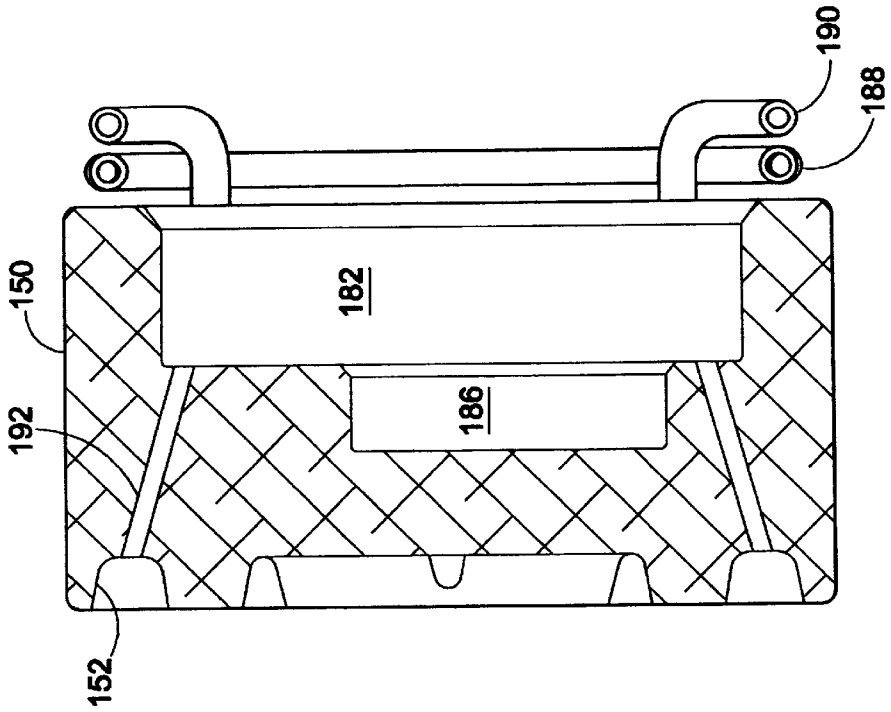
190
188
150
182
192
186
152

FIG. 6B

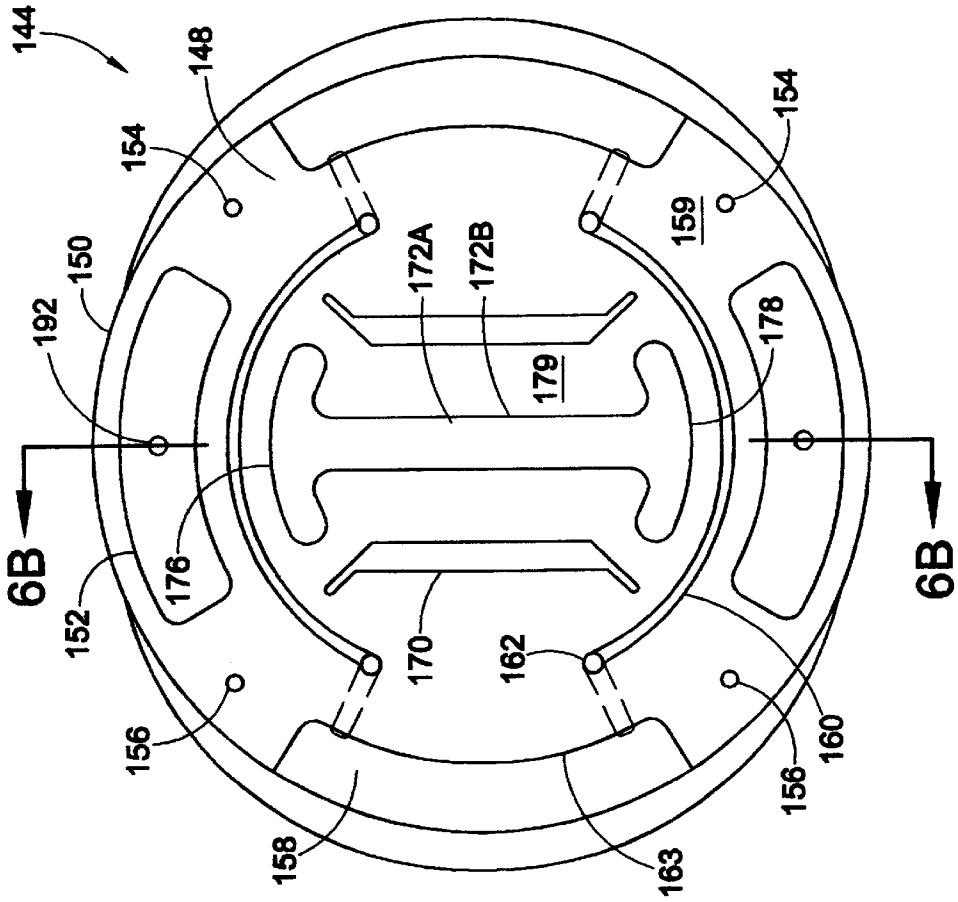
144
148
154
154
150
192
172A
172B
159
179
178
6B
6B
176
152
170
162
156
156
160
158
163

FIG. 6A

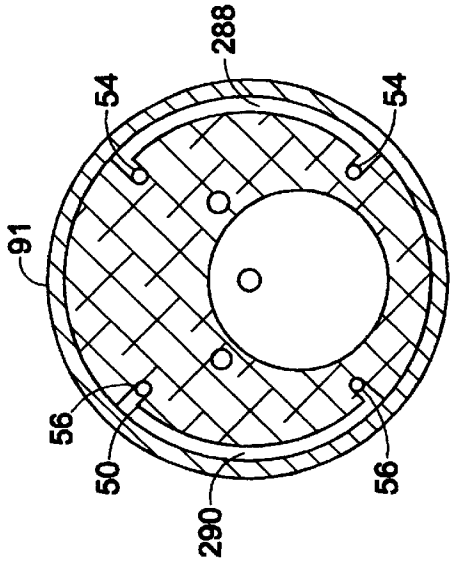

FIG. 7E

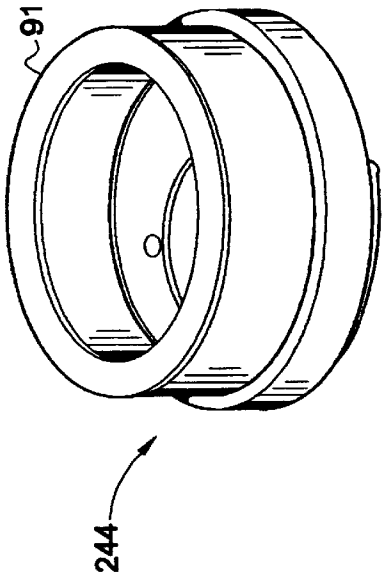

FIG. 7A

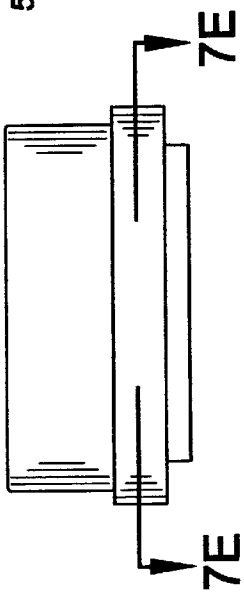

FIG. 7D

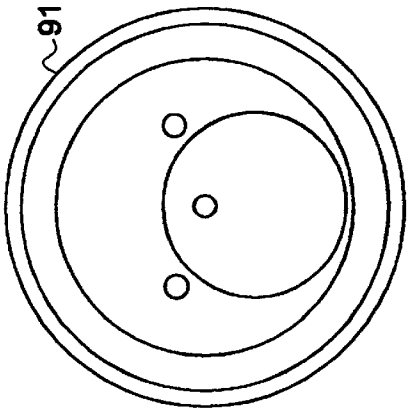

FIG. 7B

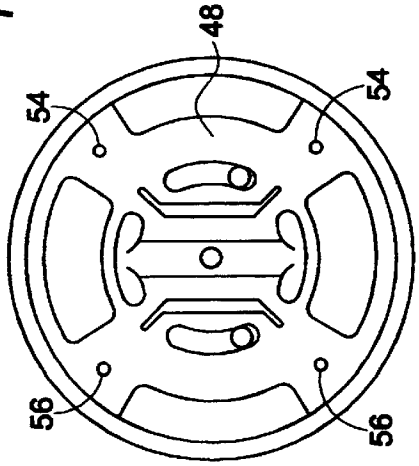

FIG. 7C

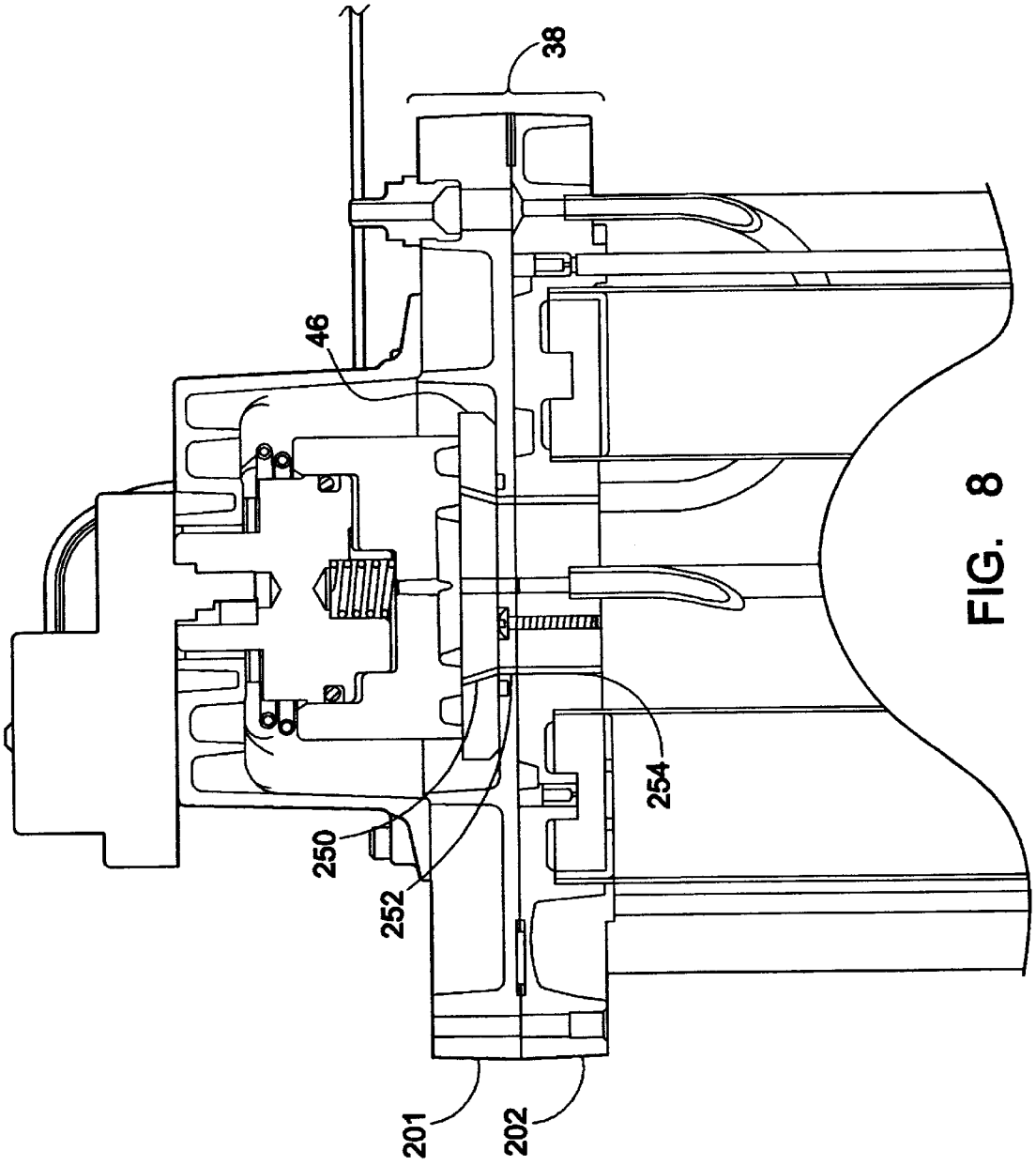

FIG. 8

FIG. 9

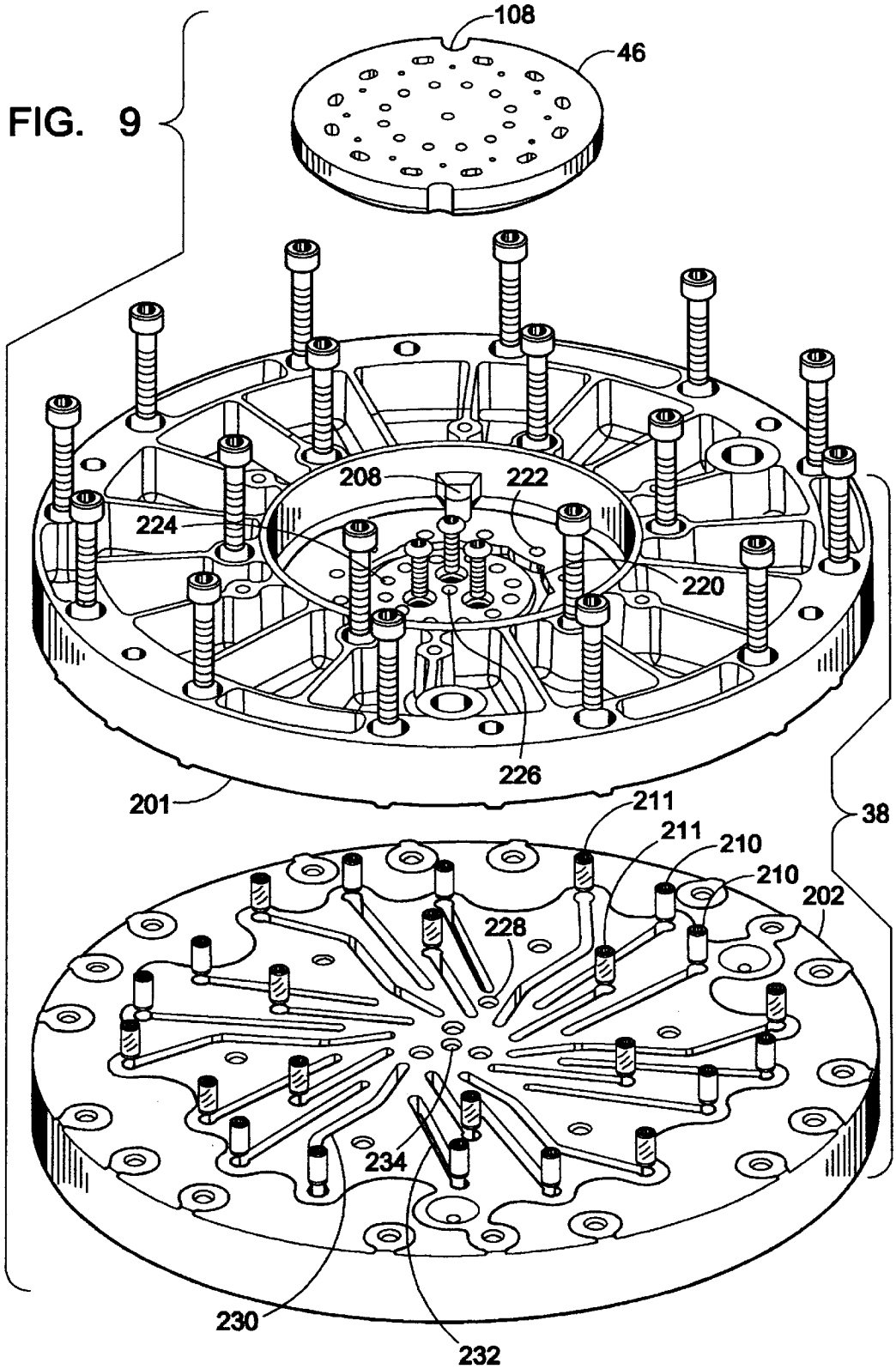
108
46
208
222
224
220
226
201
211
211
210
210
202
38
228
234
230
232

ROTARY VALVE ASSEMBLY FOR PRESSURE SWING ADSORPTION SYSTEM

FIELD OF THE INVENTION

This invention relates in general to the separation of gases by pressure swing adsorption (PSA), and in particular to a rotary valve assembly for a PSA system.

BACKGROUND OF THE INVENTION

Cyclic adsorption processes are generally practiced in batteries of adsorption vessels comprised of two or more adsorbent-filled vessels arranged in parallel and operated out of phase such that at least one vessel is in the adsorption mode while at least one other vessel is in the adsorbent regeneration mode.

In each cycle of the process a series of sequential steps, including adsorption, equalization and regeneration, are carried out in each vessel. To enable the various streams to flow to and from the vessels, the feed, product, and exhaust lines have been provided with a rotary valve assembly that provides valving action to permit gas flow through these lines at the appropriate time in the adsorption cycle.

The rotary valve assembly also permits communication between the inlet ends of the vessels and the outlet ends of the vessels to permit flow between the vessels during pressure equalization steps. Pressure equalization is the passage of gas from a first vessel that has just completed its adsorption step to a vented or evacuated vessel which has just completed its adsorbent regeneration step.

Relevant background art for pressure swing adsorption systems can be found in the following U.S. patents, all of which are hereby incorporated by reference for all they disclose and describe: U.S. Pat. Nos. 5,814,131, 5,814,130, 5,807,423, 5,366,541, 5,268,021, and Re. 35,009.

U.S. Pat. Nos. 5,814,130, 5,814,131 and 5,807,423 disclose a rotary valve assembly for use with adsorption vessels that generally includes a valve port disk and rotary valve. The valve port disk and the rotary valve are described as being ground to have highly polished flat finishes to enable the faces of the disks to form a fluid-tight seal with each other. The rotary valve is rotated relative to the stationary valve port disk so that openings on the face of the rotary valve register with holes in the valve port disk, providing valving action to permit appropriate gas flow through the vessels for the adsorption, regeneration and equalization modes.

Between the rotary valve and the inside surface of a valve assembly cover are a number of annular channels formed by multiple annular seal rings disposed around the valve. A respective exhaust line, purge fluid supply line and product gas line communicate with these annular channels. The rotary valve includes bores extending from the openings on the flat engagement surface to the periphery of the valve for communicating the openings with the annular channels and fluid lines.

There are a number of drawbacks with this proposed design in these patents. First, the multiple annular seal rings are impractical. The seal rings would be expensive to make, difficult to install and service, difficult to make leak-free (even when new), and would be subject to wear and increased leakage over time. The leakage between these various fluid streams could have serious negative effects on the performance of the gas separation device, i.e., the product gas would become contaminated. The seal rings also would greatly increase the torque required to turn the valve and, hence, increase the size of the motor.

Second, the rotary valve assembly is not pressure balanced. At the operating pressures needed for the separation cycle, a very heavy pre-load would need to be placed on the valve parts to prevent their separation while operating.

Third, the co-location of the purified product gas and feed gas on the faces of the rotary valve and the valve port disk would inevitably lead to leakage of the feed gas into the product gas. Feed gas is at higher pressure than the product gas and, hence, has the multiple driving forces of differential pressure and a large concentration gradient leading to contamination of the high purity product with contaminates from the feed gas. Even though the leak rate can be made very low by producing a valve face interface with sufficient accuracy, i.e., flatness and finish, the leakage can not be eliminated altogether since the valve depends on a thin gas film being established between the flat engagement surfaces of the rotary valve and the valve port disk. In the case of nitrogen separation from air, if the desired product purity is in the range of tenths of percentage points oxygen to PPM (Parts Per Million) levels of oxygen, the rotary valve assembly described in these patents could not be used.

SUMMARY OF THE INVENTION

The present invention provides a rotary valve assembly for a pressure swing adsorption system having means for inhibiting leakage and contamination between fluid sections of the valve assembly. The rotary valve assembly includes a first valve member and a second valve member relatively rotatable about a common center of rotation to provide valving action for selectively transferring fluids therethrough. The second valve member has a first fluid section with at least one aperture adapted for transferring a first fluid of a first pressure and composition therethrough and a second fluid section with at least one aperture adapted for transferring a second fluid of a second pressure and composition therethrough. The first valve member has a first fluid section with at least one passage for transferring the first fluid in the valve assembly and a second fluid section with at least one passage for transferring the second fluid in the valve assembly. A vent is located between the first fluid sections and the second fluid sections of the valve assembly and is vented to a pressure lower than the pressures of the first and second fluids so as to vent leakage from either of the sections of the valve assembly. The rotary valve assembly further includes means for effecting relative rotation of the first valve member and second valve member.

In a preferred embodiment of the invention, the first valve member is a rotating rotary valve shoe and the second valve member is a stationary valve port plate. The at least one aperture and passage of the first fluid sections are disposed at a first radius and the at least one aperture and passage of the second fluid sections are disposed at a second radius. The vent is comprised of an annular vent groove disposed in an engagement surface of the rotary valve member at a radius between the first radius and the second radius. The annular vent groove is vented to approximately atmospheric pressure.

An alternative rotary valve assembly includes a first valve member and a second valve member relatively rotatable about a common center of rotation to provide valving action for selectively transferring fluids therethrough. In this embodiment, a number (N) of concentric fluid sections are adapted to transfer N fluids therethrough. A number of concentric annular grooves equal to N−1 are located respectively between the fluid sections and vented to a pressure lower than the pressures of the fluids in adjacent concentric

sections so as to vent any leakage from adjacent sections. The rotary valve assembly further includes means for effecting relative rotation of the first valve member and the second valve member.

An alternative rotary valve assembly includes a first valve member and a second valve member relatively rotatable about a common center of rotation to provide valving action for selectively transferring fluids therethrough. The second valve member has a central product fluid aperture at the common center of rotation through which product fluid flows to exit the assembly. A set of equally spaced product fluid apertures are concentrically disposed at a predetermined radius from the common center of rotation and are interconnected to product ends of adsorption vessels. The first valve member includes a cavity, at least one product passage for selectively interconnecting at least two apertures of the set of product apertures with the central product aperture and the cavity, and at least one purge passage interconnected with the cavity for selectively interconnecting the cavity with at least two apertures of the set of product apertures. The rotary valve assembly further includes means for effecting relative rotation of the first valve member and second valve member, whereby registration of the product fluid apertures of the second valve member with the product passage of the first valve member allows product fluid to exit the assembly through the central product aperture and enter the cavity for supplying balancing pressure for the first valve member and second valve member and purge gas via the at least one purge passage for regenerating more than one adsorption vessel.

In a preferred embodiment of the invention described immediately above, the rotary valve shoe includes at least one flow control element to control the flow of purge gas from the cavity.

An alternative rotary valve assembly for a pressure swing adsorption system having more than one adsorption vessel includes a valve port plate and a rotary valve shoe having respective engaged surfaces generally defining a plane and are relatively rotatable about a common center of rotation to provide valving action for selectively transferring fluids therethrough. The valve port plate has more than one aperture interconnected with the more than one adsorption vessel. The rotary valve shoe has at least one passage adapted to register with two of the apertures for equalizing two of the adsorption vessels and is not coplanar with the engagement surfaces. The rotary valve assembly further includes means for effecting relative rotation of the valve port plate and the rotary valve shoe to enable the valving action.

BRIEF DESCRIPTION OF THE DRAWINGS

The drawings illustrate both the design and utility of a preferred embodiment of the present invention, wherein:

FIG. **1**A is a perspective view of a pressure swing adsorption system constructed in accordance with a preferred embodiment of the invention;

FIG. **1**B is a side-elevational view of the pressure swing adsorption system of FIG. **1**A;

FIG. **1**C is a top plan view of the pressure swing adsorption system of FIG. **1**A;

FIG. **1**D is a cross-sectional view of the pressure swing adsorption system of FIG. **1**A taken along line **1**D—**1**D of FIG. **1**B;

FIG. **1**E is a cross-sectional view of the pressure swing adsorption system of FIG. **1**A taken along line **1**E—**1**E of FIG. **1**C;

FIG. **2** is a partial, cross-sectional view of a top portion of the pressure swing adsorption system illustrated in FIG. **1**A–**1**D;

FIG. **3**A is a top perspective view of a rotary valve shoe constructed in accordance with a preferred embodiment of the invention;

FIG. **3**B is a top plan view of the rotary valve shoe illustrated in FIG. **3**A;

FIG. **3**C is a cross-sectional view of the rotary valve shoe taken along line **3**C—**3**C of FIG. **3**B;

FIG. **3**D is a bottom plan view of the rotary valve shoe illustrated in FIG. **3**A;

FIG. **4**A is a top plan view of a valve port plate constructed in accordance with a preferred embodiment of the invention;

FIG. **4**B is a cross-sectional view taken along lines **4**B—**4**B of FIG. **4**A;

FIG. **5** is a cross-sectional view of an embodiment of the rotary valve shoe and a first drive shaft;

FIG. **6**A is a bottom plan view of an alternative embodiment of a rotary valve shoe;

FIG. **6**B is cross-sectional view of the rotary valve shoe illustrated in FIG. **6**A taken along line **6**B—**6**B;

FIG. **7**A is a top perspective view of a rotary valve shoe constructed in accordance with a further embodiment of the invention;

FIG. **7**B is a top plan view of the rotary valve shoe illustrated in FIG. **7**A;

FIG. **7**C is a bottom plan view of the rotary valve shoe illustrated in FIG. **7**A;

FIG. **7**D is a side-elevational view of the rotary valve shoe illustrated in FIG. **7**A;

FIG. **7**E is a cross-sectional view of the rotary valve shoe taken along line **7**E—**7**E of FIG. **7**A;

FIG. **8** is a partial, cross-sectional view of a top portion of a pressure swing adsorption system constructed in accordance with an alternative embodiment of the invention; and

FIG. **9** is a perspective view of the valve port plate, top manifold member and bottom manifold member constructed in accordance with an embodiment of the invention.

DESCRIPTION OF THE PREFERRED EMBODIMENT

With reference to FIG. **1**A–**1**E, a pressure swing adsorption (PSA) system **20** including a rotary valve assembly **22**, constructed in accordance with a preferred embodiment of the invention, will now be described. The PSA system **20** is used to fractionate fluids.

As used herein the term "fluids" includes both gases and liquids. Although the present invention will be described in conjunction with the separation of nitrogen from air, it will be readily understood by those skilled in the art that the present invention applies to the fractionation of other fluids such as, but not by way of limitation, the separation of oxygen from air.

The adsorption system **20** includes multiple adsorption vessels **24**, each containing a bed of adsorbent material which is selective for a particular molecular species of fluid or contaminant, and the rotary valve assembly **22**. In the preferred embodiment of the system **20**, twelve adsorption vessels **24** are included. However, it will be readily understood by those skilled in the art how other numbers of vessels **24** (two or more) may be used. The adsorption

vessels **24** preferably used in the system **20** include straight elongated vessels, as shown. Alternatively, the vessels **24** may have a construction such as, but not by way of limitation, U-shaped or concentric. Each adsorption vessel **24** includes a product end **28** and a feed end **30**. The feed ends **30** communicate with respective feed lines or tubes **32** through passages in a header **34**. Springs **36** are disposed near the bottoms of the adsorption vessels **24** to hold the packed beds of adsorbent material firmly in place. The product ends **28** communicate with passages in a manifold **38** for communication with the rotary valve assembly **22**.

With reference additionally to FIGS. **2**, **8** and **9**, the manifold **38** is constructed of a top member **201** and a bottom member **202**. The manifold **38** serves to connect the rotary valve assembly **22** with the adsorption vessels **24** at both the feed ends **30** (via the feed tube **32**) and the product ends **28**. The two-piece construction allows for the creation of passages that connect apertures in either the top member **201** or bottom member **202**. The preferred embodiment of the manifold **38** has provision for flow control elements to be inserted in these internal passages to control the rate of flow of various fluid streams within the system **20**. The preferred embodiment includes both feed orifices **210** and product orifices **211** that control the flow of gas streams into and out of the adsorption vessels **24**.

In the case that the density of internal passages is so great that it becomes difficult to route more passages in this manner, one or more external passages may be added. For example, in the preferred embodiment, this is done with a feed U-tube **43** that connects a feed fitting or air feed inlet **41** at a convenient location on the manifold **38** to the appropriate position on the manifold **38** near the valve assembly **22** and a product U-tube **42** that connects a product fitting or product outlet **40** at a convenient location on the manifold **38** to the appropriate position on the manifold **38** near the valve assembly **22**.

An annular groove **220** (FIG. **9**) in the top member **201** of the manifold **38** is used to introduce feed gas in the preferred embodiment. A single passage communicating to the annular groove **220** is then able to supply a fluid stream to a multiplicity of apertures **112** in a port plate **46** of the rotary valve assembly **22**.

In the preferred embodiment, the two members **201**, **202** making up the manifold **38** are fastened together with a multiplicity of stay bolts to resist the separation force created by the fluid pressure present in the internal passages. Additionally, a sealant is used to seal the various fluid passages so that there is no leakage from one passage to another or from a passage to an external surface. One skilled in the art will recognize that a number of methods exist to provide this sealing function such as using a gasket, O-rings, adhesive material or the like.

With reference to FIGS. **1–5**, **8** and **9**, to assist the reader in gaining a better understanding of the invention, the PSA system **20** will now be generally described in use. Air flows into the air feed inlet **41** and through the feed U-tube **43**. Air flows through feed inlet aperture **228** and into air feed groove **220** in the manifold **38**. From there, air flows to the rotary valve assembly **22** where it is distributed back through feed apertures **222** in the top member **201** of the manifold **38** to feed orifices **210** in the bottom member **202** via feed channels **232**. The air then flows through multiple feed lines **32** to the header **34**, where it is distributed to the adsorption vessels **24** at the feed ends **30**.

The sieve beds (not shown) of the adsorption vessels **24** are a packed particulate adsorbent which preferentially adsorbs oxygen relative to nitrogen in the feed air so that nitrogen is produced as the non-adsorbed product gas. An adsorbent such as a carbon molecular sieve will provide this effect when the adsorption process is carried out on a kinetic basis.

The resulting product nitrogen gas flows towards the products ends **28** of the adsorption vessels **24**, out product orifices **211** in the bottom member **202**, through product channels **230**, through product apertures **224** in the upper member **201**, and to the rotary valve assembly **22**, where it is distributed back through the manifold **38** via product aperture **226** of the upper member **201** and product aperture **234** of the lower member **202** to the product U-tube **42**. The product U-tube **42** transfers the nitrogen product gas out to the nitrogen product outlet **40**. As will be described in greater detail below, some of the product gas in the rotary valve assembly **22** may be used to purge or regenerate beds in the adsorption vessels **24**.

With reference also to FIGS. **3A–3D** and **4A–4B**, a preferred embodiment of the rotary valve assembly **22** will now be described in more detail. The rotary valve assembly **22** includes a first valve member such as a rotary valve shoe or disk **44** and a second valve member such as a valve port plate or disk **46**. Both the rotary valve shoe **44** and valve port plate **46** are preferably circular in construction. However, it will be readily understood by those skilled in the art that they may be shaped otherwise, for example, polygonal. The rotary valve shoe **44** and valve port plate **46** are preferably made from a durable material such as ceramic, which can be ground to a highly polished flat finish to enable the faces of the valve shoe **44** and port plate **46** to form a fluid-tight seal when pressed together.

With reference specifically to FIGS. **3A–3D**, the rotary valve shoe **44** has a flat engagement surface **48** (FIG. **3D**) and a cylindrical exterior surface **50**. The valve shoe **44** has several symmetrical arcuate passages or channels cut into the engagement surface **48**, all of which have as its center the geometric center of the circular engagement surface **48**. The passages or channels include opposite feed channels **52**, a first pair of equalization passages **54**, a second pair of equalization passages **56**, and opposite exhaust ports **58** (which open at the side wall **50**). Although the passages or channels are generally described below as means for transferring fluid from one part of the engagement surface **48** to another, the passages or channels may also be configured to transfer fluid from the engagement surface **48**, out of the rotary valve shoe **44**. As will be better understood below, the passages or channels related to the feed fluid or the feed end **30** of the adsorption vessels **24** are part of a feed fluid section **59**.

Proceeding radially inward from the aforementioned passages or grooves, the engagement surface **48** includes annular vent groove **60** and opposite passages **62** that extend from the vent groove **60** to the side wall **63** of the exhaust ports **58**. Near the center of the rotary valve shoe **44** are arcuate purge channels **64**, purge passages **66** in which flow control elements such as small orifices **68** are inserted, cross-port equalization channels **70**, and product channels **72A** and **72B** which respectively extend radially from a central product passage **74** to symmetrical opposite arcuate product channels or pockets **76**, **78**. Other flow control elements may be used besides small orifices **68** such as, but not by way of limitation, sintered metal elements or capillary tubes. The above-described passages or channels located at radial positions inside the groove **60** that relate to the product fluid or product ends **28** of the adsorption vessels **24** are part of a product fluid section **79**.

Although a pair of purge passages **66** and flow control elements **68** are described, it will be readily understood by those skilled in the art that one or more purge passages **66** and flow control elements **68** may be incorporated into the rotary valve shoe **44**. If more than one flow control element **68** is used, it is desirable to match the flow characteristics of the flow control elements.

With reference to FIGS. **6**A and **6**B, a rotary valve shoe **144** constructed in accordance with an alternative embodiment of the invention, which does not allow for product gas purge flow, is shown. Elements similar to those described above with respect to FIGS. **3**A–**3**D are identified with numbers that include the same last two digits, but with a "1" prefix, i.e., **58** becomes **158**, **63** becomes **163**, etc. Because the embodiment of the rotary valve shoe **144** does not allow for product gas to be used as purge flow, the following elements described above with respect to FIGS. **3**A–**3**D are not needed: pockets **64**, passages **66**, and flow control elements **68**. This embodiment of the rotary valve shoe **144** is in fact the more common way to operate the nitrogen from air separation cycle when the adsorption vessels **24** are packed with a Carbon Molecular Sieve (CMS). The rotary valve shoe **144** includes opposite arcuate vent grooves **160** and multiple passages **162** that extend from the vent grooves **160** to the side wall **163** of the exhaust ports **158**.

With reference back to FIGS. **3**A–**3**E, an upper part of the rotary valve shoe **44** includes an upper annular surface **80** that surrounds a first annular recess **82** and a second surface **84** that surrounds an eccentric recess **86**. An eccentric floor **87** defines a bottom part of the eccentric recess **86**.

Equalization routing for the feed ends **30** of the adsorption vessels **24** is done in a plane out of a plane generally defined by the engagement surface **48** of the rotary valve shoe **44** because of the limited amount of room available for this purpose on the engagement surface **48**. A first equalization tube **88** and a second equalization tube **90**, each constructed of formed tubing, are bonded into passages **54** and **56** in the upper surface **80** of the rotary valve shoe **44** for interconnecting the first pair of equalization passages **54** and the second pair of equalization passages **56**, respectively. The first equalization tube **88** and equalization passages **54** form a first passage adapted to communicate with the feed ends **30** of two adsorption vessels **24** for equalization purposes. Likewise, the second equalization tube **90** and equalization passages **56** form a second passage for this purpose.

With reference to FIGS. **7**A–**7**E a rotary valve assembly **244** constructed in accordance with an alternative embodiment of the invention, which interconnects each set of equalization passages **54**, **56** of the rotary valve shoe **44** in a different way, will now be described. As shown in FIGS. **7**C and **7**E, the equalization passages **54**, **56** extend from the engagement surface **48** to the sidewall **50** of the rotary valve shoe **44**. Each equalization passage **54**, **56** is routed around the outer circumference or sidewall **50** of the rotary valve shoe **44**, underneath a ring **91** that is shrunk or bonded onto the sidewall **50** of the rotary valve shoe **44**, to interconnect each respective set of equalization passages **54**, **56**. It will be readily apparent to those skilled in the art that other ways exist to interconnect each set of equalization passages **54**, **56** of the rotary valve shoe **44**.

The purge passages **66** extend from the second surface **84** to the arcuate passages **64** of the rotary valve shoe **44**. The central product passage **74** extends from the floor **87** of the eccentric recess **86** to the product channels **72**A, **72**B.

The first and second annular recesses **82**, **86** are configured to receive a first drive shaft **92** as shown in FIGS. **1**, **2** and **5**. A drive motor **94** has a second drive shaft **95** which extends through a top wall of a valve assembly cover **97** and extends into a recess **99** in a top part of the first drive shaft **92**. The motor **94** is connected to a source of electric power and its shaft **95** drives the shaft **92**.

As the motor shaft **95** rotates, it causes the rotary valve shoe **44** to rotate, to cycle the adsorption vessels **24** through the various steps of the adsorption process. The motor **94** can impart continuous or stepwise rotation to the rotary valve shoe **44** around its center of rotation. Although the rotation of the valve **22** preferably includes the first valve member **44** rotating and the second valve member **46** remaining stationary, in an alternative embodiment of the invention, the opposite may be true or both valve members **44**, **46** may rotate in the same or opposite directions. The valve members **44**, **46** rotate at different speeds in the event they rotate in the same direction.

A cavity **96** in the first drive shaft **92** receives a spring **98** for applying a preload force against the rotary valve shoe **44**. The spring **98** ensures that the rotary valve shoe **44** is in contact with the valve port plate **46** even at start-up, before a balance pressure (discussed below) is established. An O-ring **100** is located in a groove **102** of the drive shaft **92**.

With reference to FIGS. **4**A and **4**B, the valve port plate **46** will now be described in greater detail. The valve port plate **46** has a flat engagement surface **104** and a smooth cylindrical side wall **106** with opposite notches **108** therein.

The valve port plate **46** also includes multiple sets of symmetric concentrically disposed ports or openings. The openings preferably extend completely through the valve port plate **46** in a direction generally perpendicular to the engagement surface **104**. Although some of the openings are described as having different configurations, it will be readily apparent to those skilled in the art that the openings may have alternative configurations such as, but not by way of limitation, round-shaped, square-shaped, sector-shaped and elongated holes. The openings may also extend through the port plate **46** at a variety of angles. Preferably, all of the openings of each set have the same configuration.

Each set of openings will now be described. A first set of twelve obround openings **110** are concentrically disposed at a first radius from the geometric center of the valve port plate **46** and interconnected with the feed ends **30** of the twelve adsorption vessels **24**. Although sets of twelve openings are described herein, it will be readily apparent to those skilled in the art that other numbers of openings may be used. Further, the number of openings in each set need not match the number of absorption vessels **24**, the number could be more or less.

A second set of twelve round feed openings **112** concentrically disposed at a second radius from the geometric center of the valve port plate **46** are interconnected with the feed air inlet for delivering feed fluid to the valve assembly **22**. The feed openings **112** have a first bore **118** and a smaller diameter second bore **120**.

A third set of twelve round openings **114** concentrically disposed at a third radius from the geometric center of the valve port plate **46** are interconnected with the product ends **28** of the twelve adsorption vessels **24**.

A round central product opening **116** disposed at the geometric center of the valve port plate **46** and the center of rotation of the valve assembly **22** is interconnected with the product U-tube **42** and outlet **40** for withdrawing product fluid.

The openings **110**, **112** are located in a feed fluid section **115** of the valve port plate **46**. The feed fluid section **115** is

the radial region of the valve port plate **46** outside of the vent groove **62** when the rotary valve shoe **44** is engaged in position with the valve port plate **46**.

The openings **114** and central product opening **116** are located in a product fluid section **117** of the valve port plate **46**. The product fluid section **117** is the radial region of the valve port plate **46** inside of the vent groove **60** when the rotary valve shoe **44** is engaged in position with the valve port plate **46**.

In use, the flat engagement surface **48** of the rotary valve shoe **44** engages the flat engagement surface **104** of the valve port plate **46** so that the surfaces **48**, **104** have the same geometric center. This center serves as the center of rotation of the rotary valve shoe **44**. The notches **108** in the port plate **46** receive stop members **208** (FIG. **9**) of the manifold **38** to prevent the port plate **46** from rotating or moving during rotation of the valve shoe **44**.

Although not shown, conventional equipment may be used to supply feed fluid, monitor and automatically regulate the flow of product fluid from the system so that it can be fully automated to run continuously in an efficient manner.

With reference generally to FIGS. **1–4**, the pressure swing adsorption system and particularly the rotary valve assembly **22** will now be described in use as it applies to the separation of nitrogen from air with the adsorption vessels **24** being packed with a particulate adsorbent, e.g., Carbon Molecular Sieve (CMS), which, based on a kinetic effect, preferentially adsorbs oxygen relative to nitrogen so that nitrogen is produced as the nonadsorbed product gas. During use of the pressure swing adsorption system **20**, the rotary valve shoe **44** rotates in the valve assembly **22**. Although the rotary valve shoe **44** preferably rotates with respect to the valve port plate **46** during use so that each cycle described below is sequentially and continuously established for each vessel **24**, to help the reader gain a better understanding of the invention the following description describes the relationship between what occurs in the valve assembly **22** and the adsorption vessels **24** while the rotary valve shoe **44** is in a single position because at any given position all of the adsorption vessels are at some point in the PSA cycle.

It should be noted, with each revolution of the rotary valve shoe **44**, the adsorption vessels **24** undergo two complete PSA cycles. For each cycle, the steps include: 1) adsorption, 2) equalization down, 3) regeneration, and 4) equalization up. As the rotary valve shoe **44** rotates over the valve port plate **46**, each step described below is sequentially and continuously established for each vessel **24**.

It will be readily apparent to those skilled in that art that the rotary valve assembly may be designed so that different number of cycles may be completed with each revolution of the rotary valve shoe **44**. Further, although in the rotary valve assembly **22** illustrated the duration of the adsorption stages and purge stages is constructed to be the same, it will be readily apparent to those skilled in the art that the timing of these stages (as well as the equalization stage) may be varied by changing the configuration and/or location of the openings and/or channels in the rotary valve assembly **22**.

Compressed air is supplied to the system **20** at the air feed inlet **41**. The air may be pre-treated to remove particulates and liquid water. Feed air flows through the feed air U-tube **43** and into the manifold **38**, where it is distributed via the feed air groove **220** to the valve assembly **22**. The valve assembly **22** distributes the feed air to the multiple adsorption vessels **24**.

Feed air enters the valve assembly **22** through the openings **112** (FIG. **4A**) of the valve port plate **46**. Air flows through the inner feed openings **112** and is blocked by the engagement surface **48** of the rotary valve shoe **44** except at opposite feed channels or pockets **52**. Air flows into the feed channels **52**, which communicate at least two of the openings **112** with at least two of the openings **110**, and through the corresponding openings **110** of the valve port plate **46**. The feed air then flows through feed apertures **222**, feed orifices **210** and feed channels **232** in the manifold **38** and through the feed lines **32**, into passages of the header **34**. The air then flows from the feed ends **30** of the respective adsorption vessels **24** towards the product ends **28**, and adsorption takes place in the adsorbent beds.

The nonadsorbed product gas flows out of the product ends **28** of the respective vessels **24**, through product orifices **211**, product channels **230** and product apertures **224** in the manifold **38** and through openings **114** in the valve port plate **46**. It should be noted, the number of openings **114** through which product gas flows in the valve port plate **46** typically corresponds with the number of aforementioned openings **110** through which the initial air flowed through the valve port plate **46**. The product gas flows into the arcuate channels **76**, **78** of the rotary valve shoe **44** and is channeled towards the center of the rotary valve shoe **44** through the product channels **72A**, **72B**.

From the center of the rotary valve shoe **44**, some of the product gas flows through central product opening **116**, manifold **38**, and out product U-tube **42** to the product outlet **40**. The product gas not withdrawn flows through the passage **74** of the rotary valve shoe **44** and into a space **96** between the shoe **44** and shaft **92**.

The pressure of the product gas in the space **96** produces a pressure-balancing effect on the rotary valve shoe **44**. During use of the PSA system **20**, various pressure forces in the system e.g., compressed feed air pressure, nitrogen product gas pressure, act to separate the shoe **44** from the port plate **46** at the engagement surface **48**. The pressure of the product gas in the space **96** imparts a force on the rotary valve shoe **44** equal to or slightly greater than the pressure forces acting on the engagement surface **48** of the rotary valve shoe **44**, causing the engagement surface **48** of the rotary valve shoe **44** to be pressed firmly against the engagement surface **104** of the valve port plate **46** so as to inhibit leakage at this interface. Balance is maintained over a broad range of operating pressures because pressure forces are all related and proportional to the inlet pressure. The O-ring **100** is pressure actuated for ensuring a good seal between the rotary valve shoe **44** and the first shaft **92**.

The aforementioned compression spring **98** also biases the rotary valve shoe **44** against the valve port plate **46**. The spring **98** is the only balancing force provided upon initial start-up of the PSA system, i.e., there is no balancing pressure in the space **96**.

The balancing medium, i.e., product gas, in the space **96** is also a convenient, controllable source of purge gas for the separation cycle. Product gas in the space **96** flows out of the space **96** through the purge passages **66**. The flow out of the space **96**, i.e., the purge flow, is controlled by the small orifices **68** in the purge passages **66**. Product gas flows through the purge passages **66** and into the opposite purge channels **64**. In turn, product gas flows from the purge channels **64** through respective openings **114** in the valve port plate **46**. Product gas then flows through appropriate through product apertures **224**, product channels **230** and product orifices **211** in the manifold **38** and into the product ends **28** of the respective adsorption vessels **24**. Product gas flows through the adsorbent material in the vessels **24**,

regenerating the adsorbent beds of the vessels **24** and sweeping out oxygen adsorbed therein.

As indicated above, in an alternative embodiment of the invention, as shown in FIGS. **6**A and **6**B, purging may not take place. Consequently, the purge channels **64** and purge passages **66**, **68** may not exist.

Resulting exhaust gas flows out of the feed ends **30** of the vessels **24** and into lines **32**. The exhaust gas flows out of the lines **32**, through feed orifices **210**, feed channels **232** and feed apertures **222** of the manifold **38**, through outer feed and exhaust openings **110** of the valve port plate **46**, and out of opposite exhaust ports **58**. The exhaust gas exiting the rotary valve shoe **44** enters a chamber **118** between the rotary valve shoe **44** and the valve assembly cover **97**. The exhaust gas exits the system **20** through an exhaust outlet and an optional silencer (not shown) that is in communication with the chamber **118**. The exhaust gas may be vented to the atmosphere or withdrawn for further use. Also, a vacuum may be interconnected to the exhaust fitting to improve the withdrawal of the exhaust gas and assist in regeneration. Vacuum desorption may also be used if there is no purge option. The cover **97** may be sealed at its interface with the manifold **38** and the shaft **92** of the rotary valve assembly **22** may be sealed at its penetration through the cover **97** with an O-ring or similar device to facilitate applying a vacuum or collecting waste gas for further use. Separation of nitrogen from air may be accomplished without a purge or regeneration stage. However, purging or regenerating the adsorbent beds is done to improve the purity of the product gas where a high purity product level is important.

Equalization of the adsorption vessels **24** will now be discussed. It is well known to equalize the pressure between adsorption vessels transitioning between the adsorbing and desorbing cycles to enhance product concentration and high product flow rates. This is done by equalizing the pressure between adsorption vessels that have just completed the adsorption step and adsorption vessels that have just completed the regeneration step.

Cross-port equalization channels **70** are used to equalize the pressure between the product ends of two adsorption vessels **24** where adsorption has just occurred with the product ends of two respective adsorption vessels **24** where regeneration has just occurred. This is accomplished upon rotation of the rotary valve shoe **44** where one end of a cross-port equalization channel **70** communicates with an opening **114** corresponding to a vessel **24** that just completed the adsorption phase and the other end of the same cross-port equalization channel **70** communicates with a corresponding opening **114** corresponding to a vessel **24** that just completed the regeneration phase. Each cross-port equalization channel **70** serves as a bridge to communicate and, hence, equalize the pressures in the product ends **28** of the vessels **24**.

In a similar fashion, the first equalization passages **54** and equalization tubes **90** and second equalization passages **56** and equalization tubes **88** serve to communicate and equalize the feed ends **30** of respective adsorption vessels **24** that have just completed the adsorption and regeneration steps. The first equalization passages **54** and second equalization passages **56** communicate with the feed ends **30** of the vessels **24** through the openings **110** of the valve port plate **46**.

It should be noted, most of the communication that exists between the vessels **24** during the adsorption, regeneration and equalization steps results from the ports, passages and channels being generally parallel with the engagement surface **48** of the rotary valve shoe **44**. An exception is the communication that exists between feed ends **30** of the adsorption vessels **24** for equalization purposes. This communication results from the first equalization passages **54** and tubes **90** and the second equalization passages **56** and tubes **88** which extend vertically through the rotary valve shoe **44**, out of the upper annular surface **80** of the rotary valve shoe **44**, and around a majority of the periphery of the upper annular surface **80**. The equalization tubes **88**, **90** are generally coplanar with each other and parallel, but not coplanar with the plane of the engagement surface **48** of the rotary valve shoe **44**.

It will be readily apparent to one skilled in the art that the following exemplary equalization combinations are possible, depending on the application:

1) No equalization (either end);
2) Equalization (feed end only);
3) Equalization (product end only);
4) Equalization (both ends, i.e., feed-feed, product-product);
5) Equalization (feed end to product end);
6) Equalization (product end to feed end); and
7) Equalization (product end to both ends of regenerated bed).

The purpose of the annular vent groove **60** will now be described. As discussed above, feed gas and product gas flow through the feed fluid sections and product fluid sections of the valve port plate **46** and the rotary valve shoe **44**. The vent groove **60** prevents leakage from one section from reaching the other. Of main concern is leakage from the feed fluid section into the product fluid section, i.e. leakage from the outer annular section into the inner annular section. Leakage from the feed section into the product section occurs because feed gas, i.e., air, is at higher pressure than the product gas, i.e., nitrogen, and, hence, has a driving force of differential pressure in combination with the driving force caused by a large concentration gradient. These driving forces may lead to contamination of the high purity nitrogen product gas with oxygen from the feed gas.

Even though the leak rate can be made very low by producing a valve face interface, i.e., the engagement surfaces **48**, **104** of the rotary valve shoe **44** and valve port plate **46**, with sufficient accuracy (flatness and finish) and applied contact force (through spring **98** and balance pressure in the space **96**), the leakage cannot be eliminated altogether since the valve assembly **22** depends on a thin fluid film being established between engagement surfaces **48**, **104** of the rotary valve shoe **44** and valve port plate **46**. If the desired product purity is in the range of tenths of percentage points oxygen to PPM (parts per million) levels of oxygen, it is not practical to use many of the rotary valve constructions proposed in the prior art.

The annular vent groove **60** is ported to the relatively low pressure of the valve assembly chamber **118**, where the exhaust gas normally flows, via the opposite passages **62**. Because the valve assembly chamber is in communication with the atmosphere via the exhaust outlet, the pressure within the chamber **118** is at approximately atmospheric pressure. Leaking gases that would normally flow from the feed section to the product section at the valve interface stop at the annular vent groove **60** and are withdrawn through the passages **62** to the chamber **118**, where they are then expelled to the atmosphere. Thus, leakage of feed gas into product gas is prevented.

In an alternative embodiment, the vent groove **60** may communicate with a vacuum, e.g., via chamber **118**, to

further reduce the pressure in the groove **60** and improve the ability of the groove **60** to prevent contamination. With reference to FIG. **8**, in a further embodiment, the groove **60** may be vented by passages **250**, **252**, **254** extending through the port plate **46**, upper manifold member **201** and lower manifold member **202**, respectively, to the external atmosphere (or a vacuum connection).

Although two passages **62** are shown, it will be readily apparent to those skilled in the art that other numbers of passages, e.g., 1, 3, 4, etc., may be used. For example, with reference to FIGS. **6**A and **6**B, multiple passages **162** may be used to increase the flow area for leaking fluid to limit pressure in the groove **160** to near atmospheric pressure (or pressure maintained in chamber **118**, e.g., with a vacuum). This limits the pressure drop through the passages and keeps the pressure in the vent groove **160** as low as possible.

Although the annular vent groove **60** has been described as being located on the engagement surface **48** of the rotary valve shoe **44**, it may also be located on the engagement surface **104** of the valve port plate **46**. In this instance, the opposite passages **62**, i.e., vent ports, would preferably be made to pass through the port plate **46**. Alternatively, both the rotary valve shoe **44** and valve port plate **46** may include opposing annular vent grooves on their respective engagement surfaces and venting could be done through either or both the rotary valve shoe **44** or the valve port plate **46**.

In an alternative embodiment of the invention, where the number of fluid sections in the rotary valve is N and is greater than two, N−1 annular vent grooves may exist in the rotary valve assembly, one between each pair of fluid sections where leakage between fluid sections is a concern.

In a further embodiment of the invention, the vent groove **60** may comprise one or more vent grooves, not necessarily annular, located between different fluid sections and vented to a lower pressure than the pressure of the fluids in the adjacent sections. For example, with reference to FIGS. **6**A and **6**B, instead of an annular vent groove **60**, two arcuate vent grooves **160** may be located between the product fluid section **179** and the feed fluid section **159**.

Although some of the elements described above and below are referred to by order, i.e., "first," "second," etc., it should be noted that this is done to facilitate the reader's understanding of the invention and is not intended to limit the invention. Further, the foregoing description and drawings were given for illustrative purposes only, it being understood that the invention is not limited to the embodiments disclosed, but is intended to embrace any and all alternatives, equivalents, modifications and rearrangements of elements or steps falling within the scope of the invention as defined by the following claims.

We claim:

1. A rotary valve assembly for a pressure swing adsorption system, comprising:

a first valve member and a second valve member relatively rotatable about a common center of rotation to provide valving action for selectively transferring fluids therethrough, said second valve member having a first product fluid section with at least one aperture adapted for transferring a first product fluid of a first pressure and composition therethrough and a second feed fluid section with at least one aperture adapted for transferring a second feed fluid of a second pressure and composition therethrough, said first valve member having a first product fluid section with at least one passage for transferring said first product fluid and a second feed fluid section with at least one passage for transferring said second feed fluid, and a vent located between said first product fluid sections and said second feed fluid sections of the valve assembly and vented to a pressure lower than the pressures of said first and second fluids so as to vent leakage from either of said sections of the valve assembly.

2. The rotary valve assembly of claim **1**, wherein said at least one aperture and passage of said first fluid sections are disposed at a first radius and said at least one aperture and passage of said second fluid sections are disposed at a second radius, said vent comprising an annular vent groove disposed at a radius between said first radius and said second radius.

3. The rotary valve assembly of claim **1**, wherein said at least one aperture and passage of the first fluid sections are disposed at a first radius and said at least one aperture and passage of said second fluid sections are disposed at a second radius, said vent comprising at least one segmented vent groove disposed at a radius between said first radius and said second radius.

4. The rotary valve assembly of claim **1**, where said first valve member is a rotatable rotary valve shoe and said second valve member is a stationary valve port plate.

5. The rotary valve assembly of claim **1**, wherein said vent is an annular vent groove disposed between said product fluid sections and feed fluid sections.

6. The rotary valve assembly of claim **5**, wherein said annular vent groove is located in the engagement surface of the rotary valve shoe.

7. The rotary valve assembly of claim **5**, wherein said annular vent groove is vented to approximately atmospheric pressure.

8. The rotary valve assembly of claim **7**, wherein the valve assembly includes a valve assembly cover surrounding the rotary valve shoe, a chamber located between the rotary valve shoe and valve assembly cover, the annular vent groove vented to the chamber.

9. The rotary valve assembly of claim **5**, wherein the annular vent groove is located in the engagement surface of the valve port plate.

10. The rotary valve assembly of claim **2**, wherein multiple vent passages are in communication with said annular vent groove for venting said groove.

11. A rotary valve assembly for a pressure swing adsorption system, comprising:

a first valve member and a second valve member relatively rotatable about a common center of rotation to provide valving action for selectively transferring fluids therethrough, said second valve member having a first product fluid section with at least one aperture adapted for transferring a first product fluid of a first pressure and composition therethrough and a second feed fluid section with at least one aperture adapted for transferring a second feed fluid of a second pressure and composition therethrough, said first valve member having a first product fluid section with at least one passage for traiisferring said first product fluid and a second feed fluid section with at least one passage for transferring said second feed fluid, and means for inhibiting leakage between said fluid sections.

12. A rotary valve assembly for a pressure swing adsorption system, comprising:

a first valve member and a second valve member relatively rotatable about a common center of rotation to provide valving action for selectively transferring fluids therethrough, a number (N) of concentric fluid sections adapted to transfer N fluids therethrough, adjacent concentric fluid sections adapted to transfer

respective fluids at a pressure differential therethrough, the pressure differential causing pressure differential leakage of fluid from a higher pressure fluid section to a lower pressure fluid section, and a number of concentric annular grooves equal to N−1 located respectively between said fluid sections and vented to a pressure lower than the pressures of the fluids in adjacent concentric sections so as to vent any leakage from adjacent sections.

13. A pressure swing adsorption system, comprising:

a plurality of adsorption beds; and

a rotary valve assembly to provide valving action for selectively transferring fluids through the adsorption beds, the rotary valve assembly including a first valve member and a second valve member relatively rotatable about a common center of rotation, said second valve member having a first product fluid section with at least one aperture adapted for transferring a first product fluid of a first pressure and composition therethrough and a second feed fluid section with at least one aperture adapted for transferring a second feed fluid of a second pressure and composition therethrough, said first valve member having a first product fluid section with at least one passage for transferring said first product fluid and a second feed fluid section with at least one passage for transferring said second feed fluid, and a vent located between said first product fluid sections and said second feed fluid sections of the valve assembly and vented to a pressure lower than the pressures of said first and second fluids so as to vent leakage from either of said sections of the valve assembly.

14. The system of claim **13**, wherein said at least one aperture and passage of said first fluid sections are disposed at a first radius and said at least one aperture and passage of said second fluid sections are disposed at a second radius, said vent comprising an annular vent groove disposed at a radius between said first radius and said second radius.

15. The system of claim **13**, wherein said at least one aperture and passage of the first fluid sections are disposed at a first radius and said at least one aperture and passage of said second fluid sections are disposed at a second radius, said vent comprising at least one segmented vent groove disposed at a radius between said first radius and said second radius.

16. The system of claim **13**, where said first valve member is a rotatable rotary valve shoe and said second valve member is a stationary valve port plate.

17. The system of claim **13**, wherein said vent is an annular vent groove disposed between said product fluid sections and feed fluid sections.

18. The system of claim **17**, wherein said annular vent groove is located in the engagement surface of the rotary valve shoe.

19. The system of claim **17**, wherein said annular vent groove is vented to approximately atmospheric pressure.

20. The system of claim **19**, wherein the valve assembly includes a valve assembly cover surrounding the rotary valve shoe, a chamber located between the rotary valve shoe and valve assembly cover, the annular vent groove vented to the chamber.

21. The system of claim **17**, wherein the annular vent groove is located in the engagement surface of the valve port plate.

22. The system of claim **14**, wherein multiple vent passages are in communication with said annular vent groove for venting said groove.

23. A pressure swing adsorption system, comprising:

a plurality of adsorption beds; and

a rotary valve assembly to provide valving action for selectively transferring fluids through the adsorption beds, the rotary valve assembly including a first valve member and a second valve member relatively rotatable about a common center of rotation, said second valve member having a first product fluid section with at least one aperture adapted for transferring a first product fluid of a first pressure and composition therethrough and a second feed fluid section with at least one aperture adapted for transferring a second feed fluid of a second pressure and composition therethrough, said first valve member having a first product fluid section with at least one passage for transferring said first product fluid and a second feed fluid section with at least one passage for transferring said second feed fluid, and means for inhibiting leakage between said fluid sections.

24. A pressure swing adsorption system, comprising:

a plurality of adsorption beds; and

a rotary valve assembly to provide valving action for selectively transferring fluids through the adsorption beds, the rotary valve assembly including a first valve member and a second valve member relatively rotatable about a common center of rotation to provide valving action for selectively transferring fluids therethrough, a number (N) of concentric fluid sections adapted to transfer N fluids therethrough, adjacent concentric fluid sections adapted to transfer respective fluids at a pressure differential therethrough, the pressure differential causing pressure differential leakage of fluid from a higher pressure fluid section to a lower pressure fluid section, and a number of concentric annular grooves equal to N−1 located respectively between said fluid sections and vented to a pressure lower than the pressures of the fluids in adjacent concentric sections so as to vent any leakage from adjacent sections.

* * * * *