US 20060117957A1

(19) United States

(12) Patent Application Publication

(10) Pub. No.: US 2006/0117957 A1

(43) Pub. Date: Jun. 8, 2006

McCombs et al.

(54) MINI-PORTABLE OXYGEN CONCENTRATOR

(75) Inventors: **Norman R. McCombs**, Tonawanda, NY (US); **Robert Bosinski**, West Seneca, NY (US); **Robert E. Casey**, Buffalo, NY (US); **Michael R. Valvo**, East Aurora, NY (US)

Correspondence Address:
HISCOCK & BARCLAY, LLP
2000 HSBC PLAZA
ROCHESTER, NY 14604-2404 (US)

(73) Assignee: **AirSep Corporation**

(21) Appl. No.: **11/248,783**

(22) Filed: **Oct. 12, 2005**

Related U.S. Application Data

(60) Provisional application No. 60/617,834, filed on Oct. 12, 2004.

Publication Classification

(51) **Int. Cl.**
B01D 53/02 (2006.01)

(52) **U.S. Cl.** **96/121**

(57) **ABSTRACT**

A compact and highly portable combination pressure swing adsorption apparatus and product gas conservation device for medical use, to produce efficiently a gas with a high concentration of oxygen and to deliver the oxygen concentrated gas to a user at selectable times and in selectable doses, in which the operating components are detachably mounted together as a single unit.

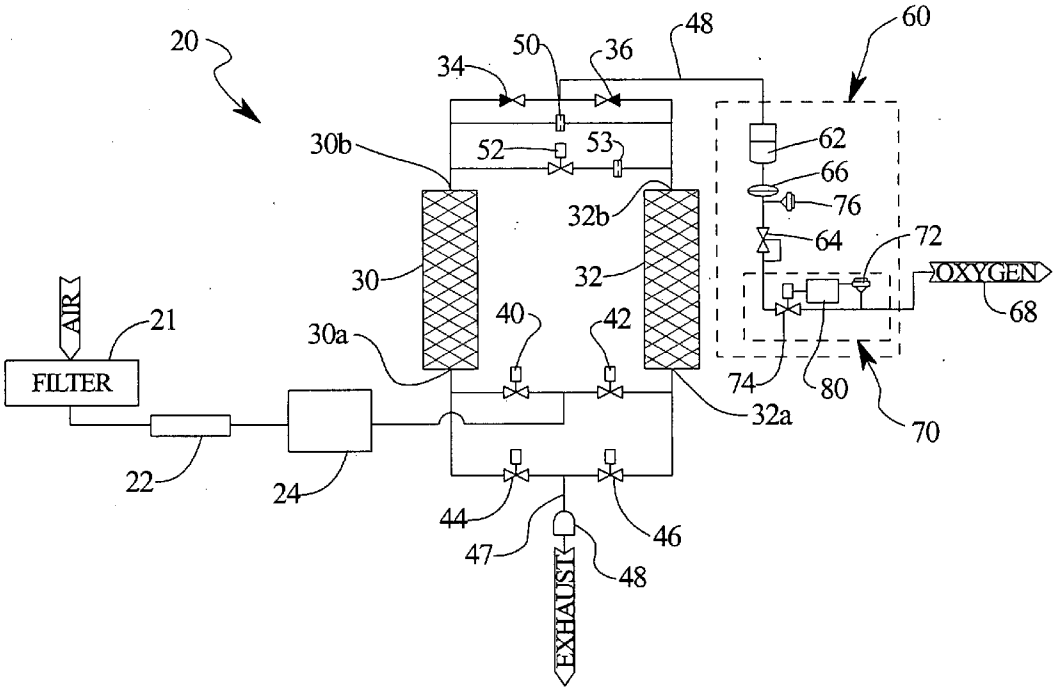

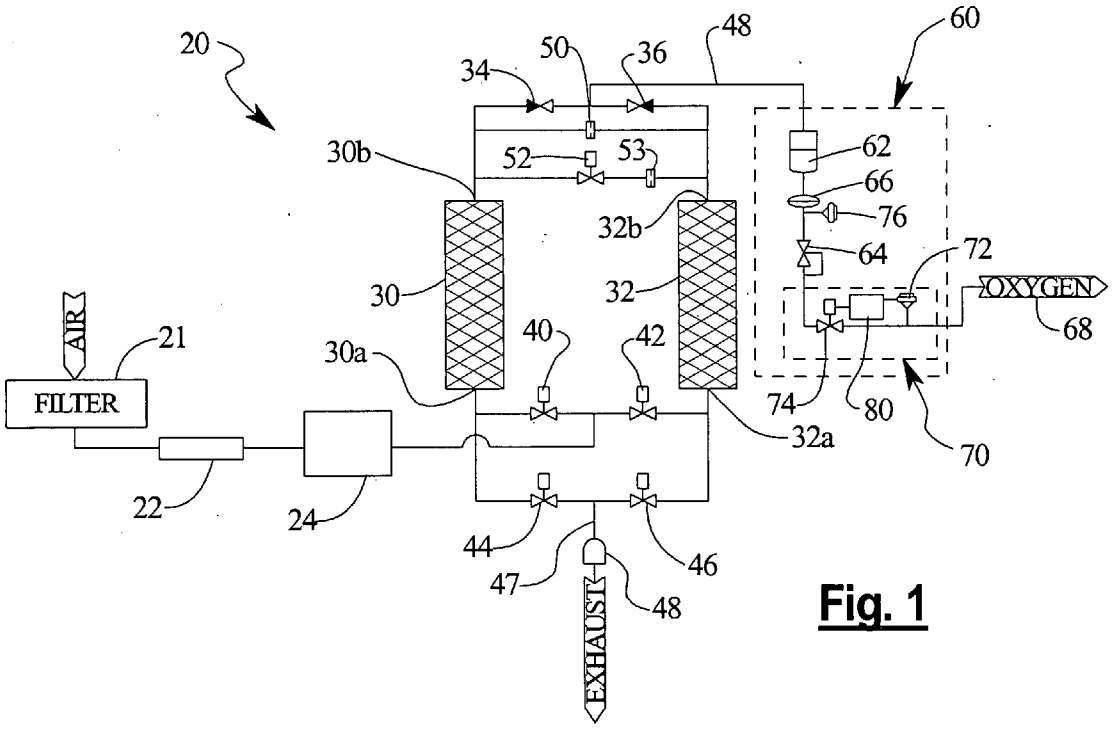
20
34
50
36
48
60
30b
52
53
62
66
76
32b
64
72
30
32
OXYGEN
68
AIR
21
40
42
30a
FILTER
74
80
32a
70
22
24
44
46
47
48
EXHAUST

Fig. 1

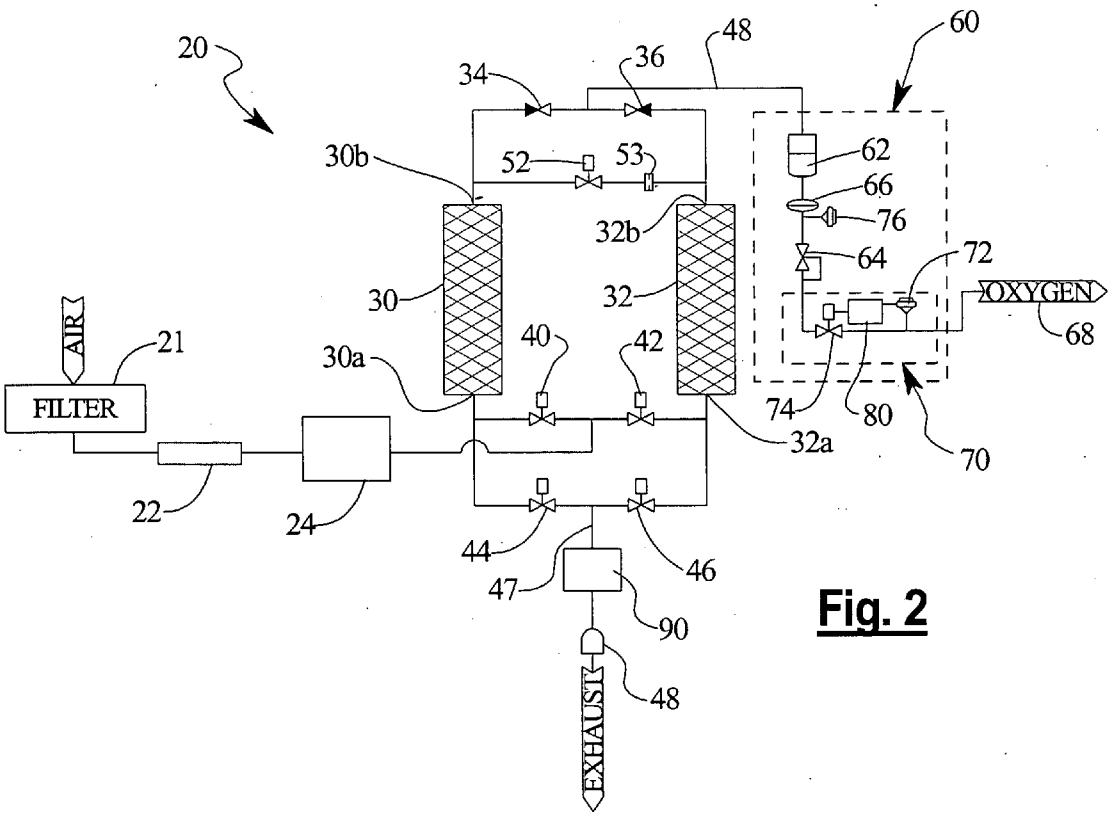
20
34
36
48
60
30b
52
53
62
66
76
32b
64
72
30
32
OXYGEN
68
AIR
21
40
42
30a
FILTER
74
80
32a
70
22
24
44
46
47
90
48
EXHAUST

Fig. 2

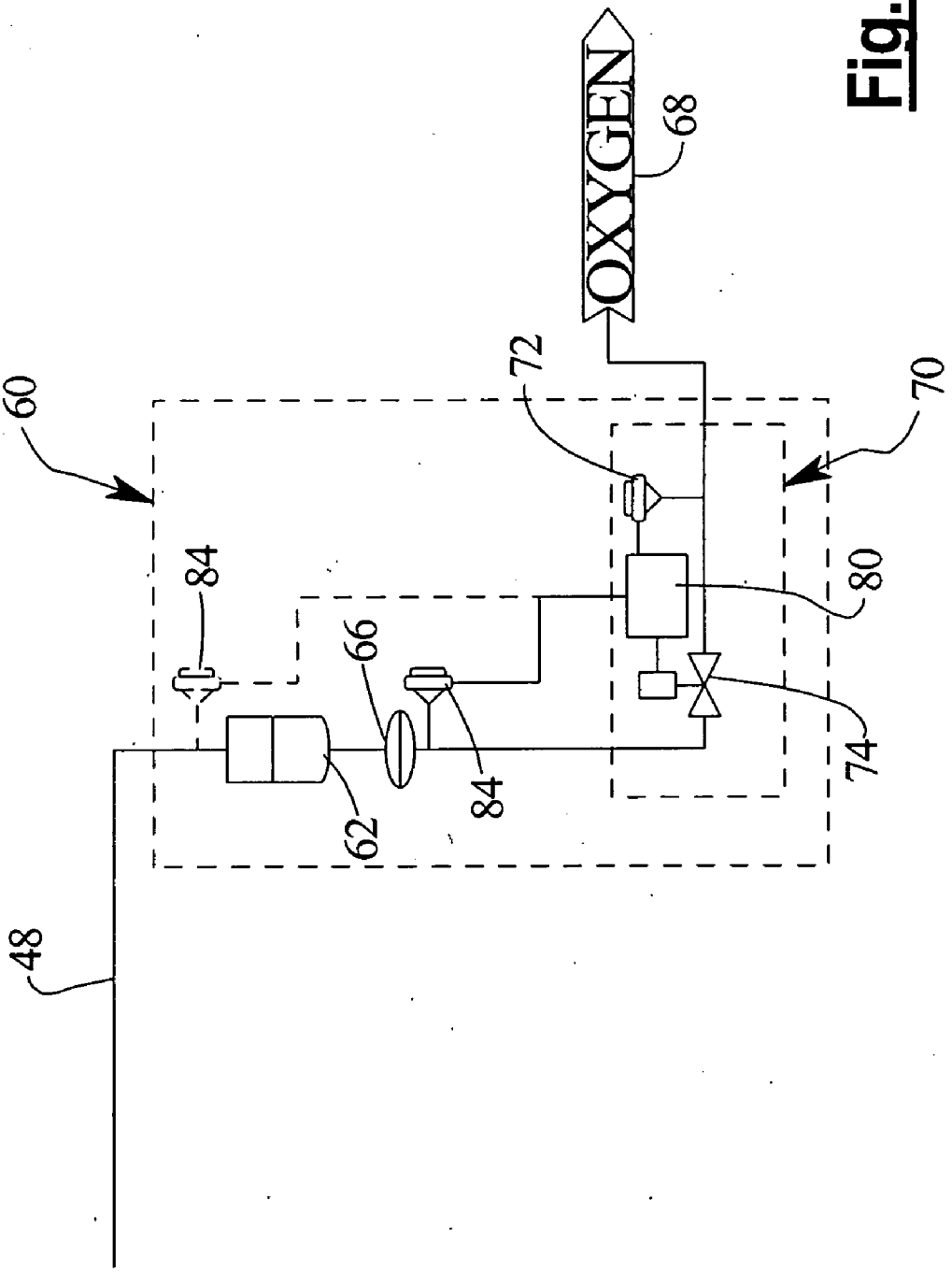

Fig. 3

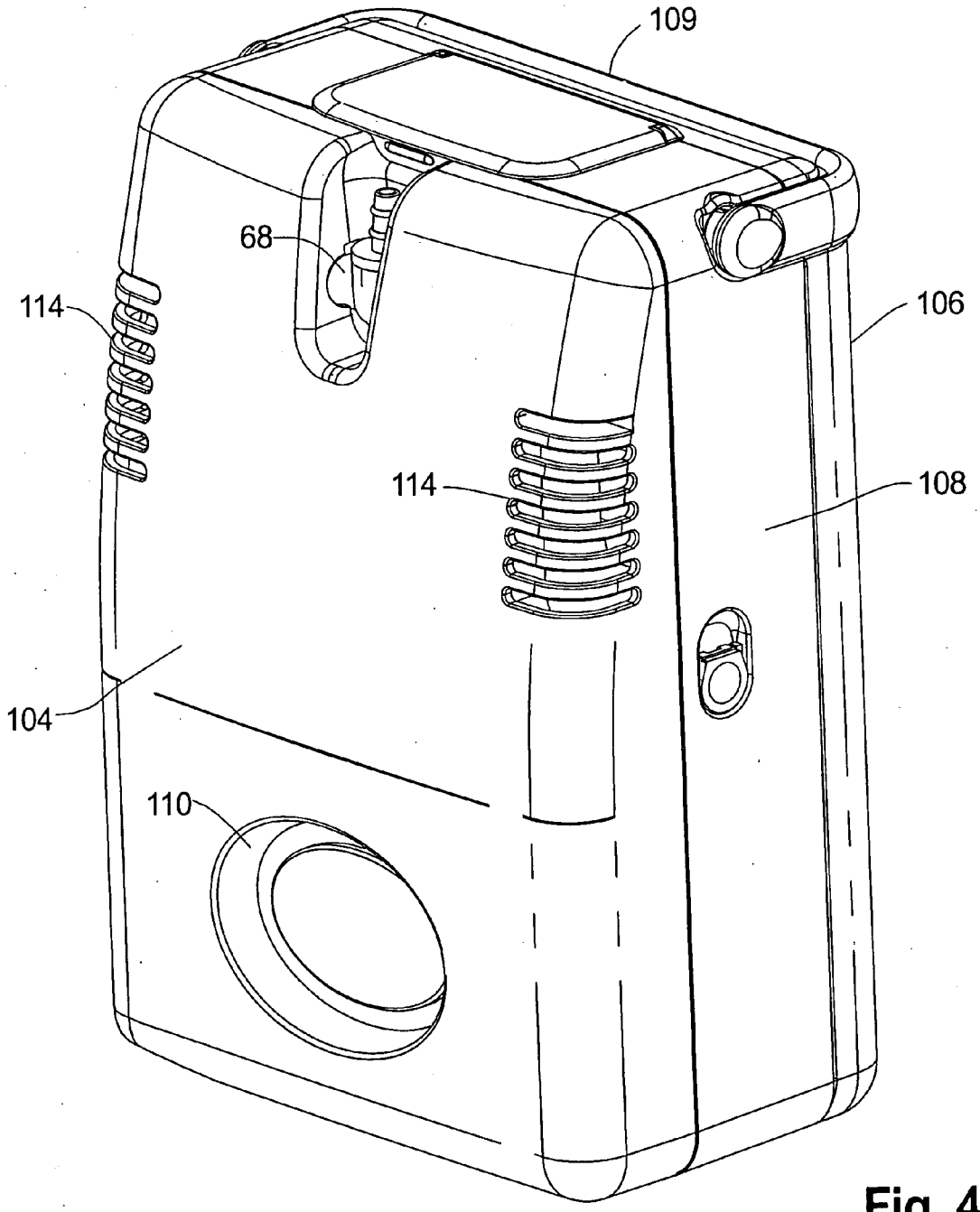

Fig. 4

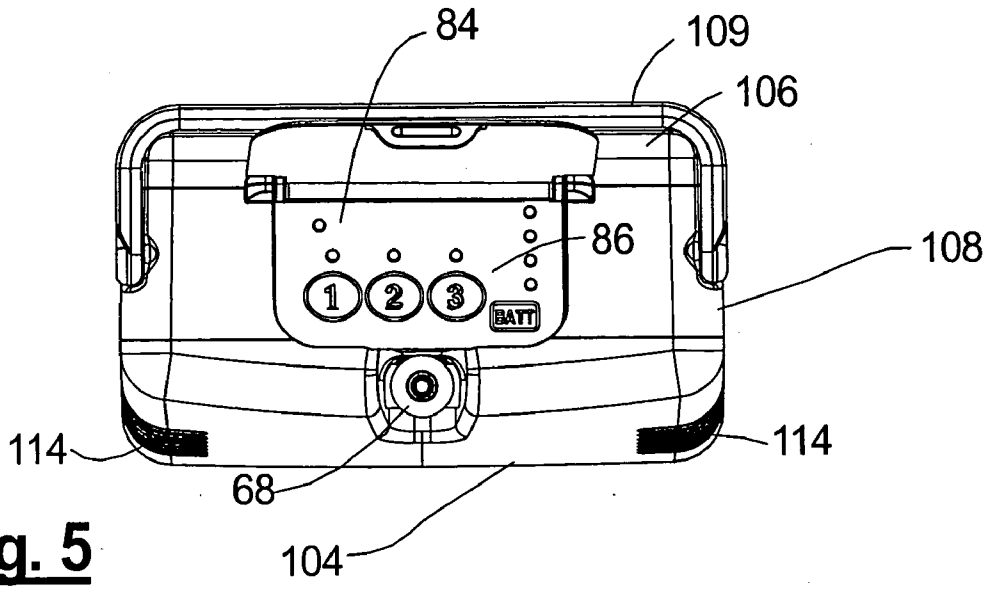

Fig. 5

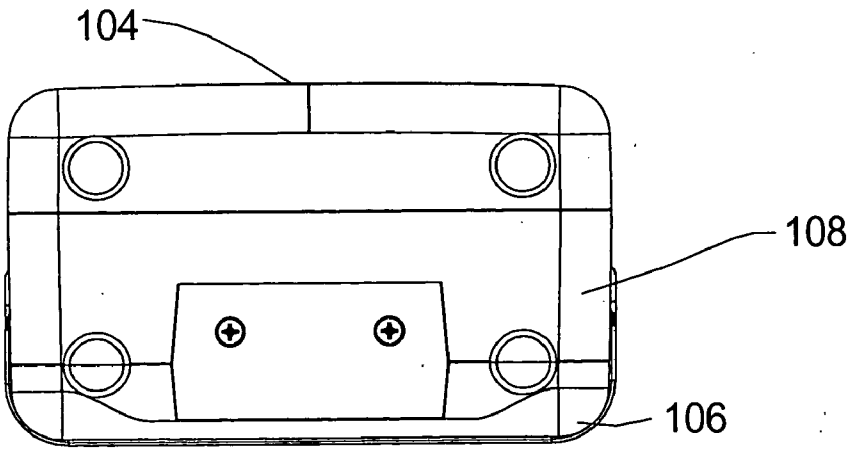

Fig. 6

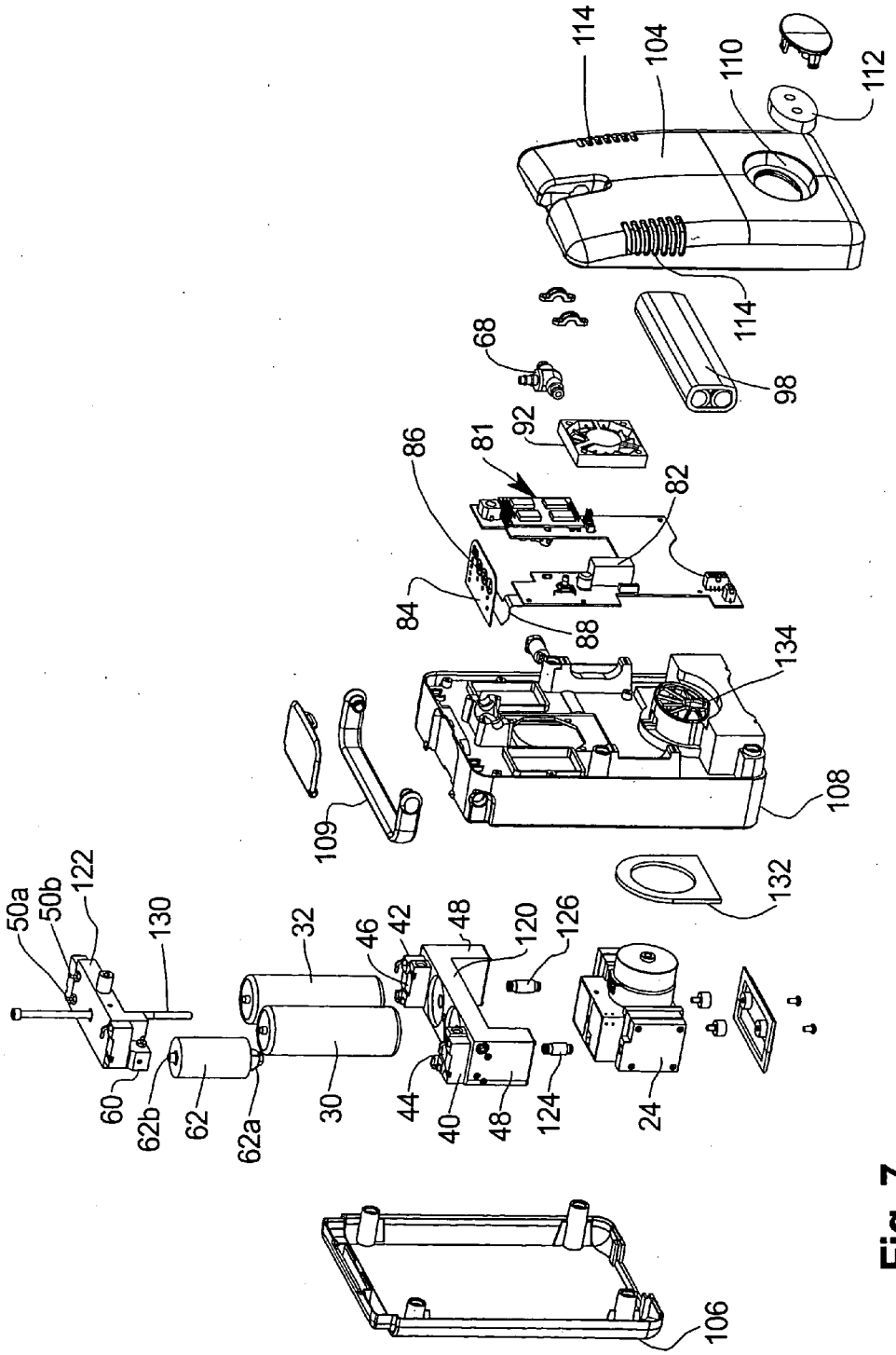
114
104
110
112
114
68
98
92
86
81
82
84
88
134
108
109
132
50a
50b
122
130
32
46
42
48
120
126
60
62b
62
62a
30
44
40
48
124
24
106

Fig. 7

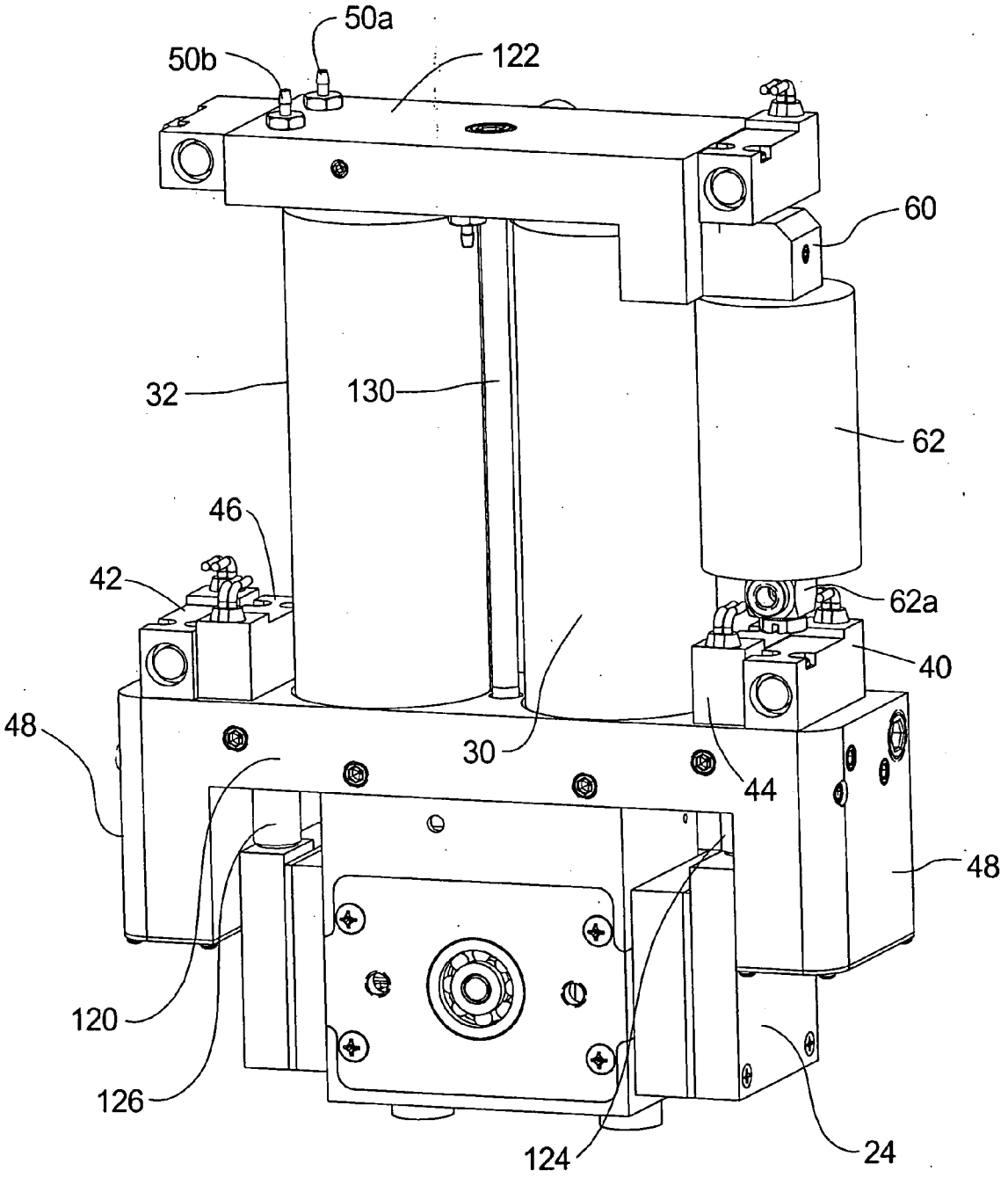

Fig. 8

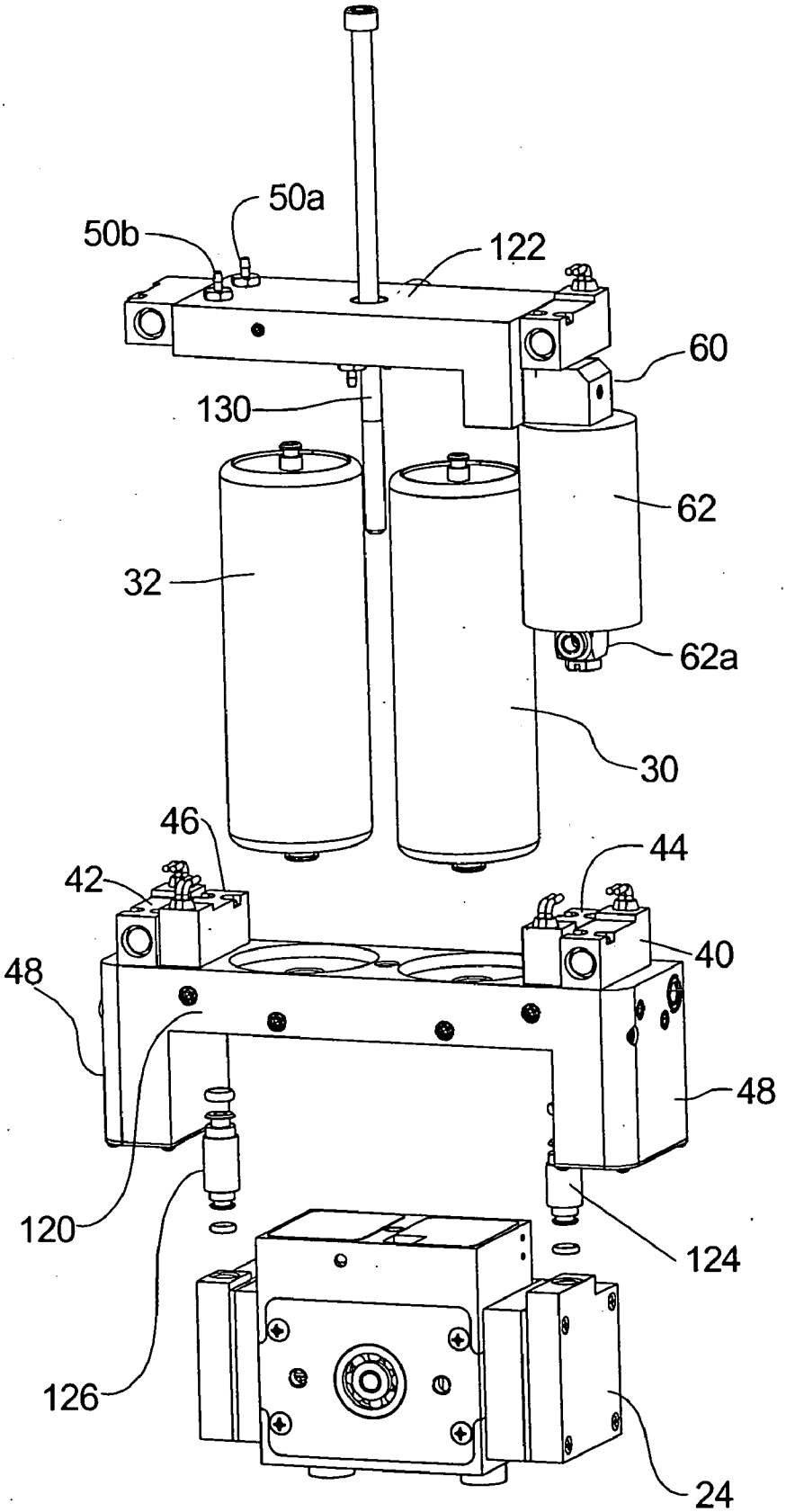

Fig. 9

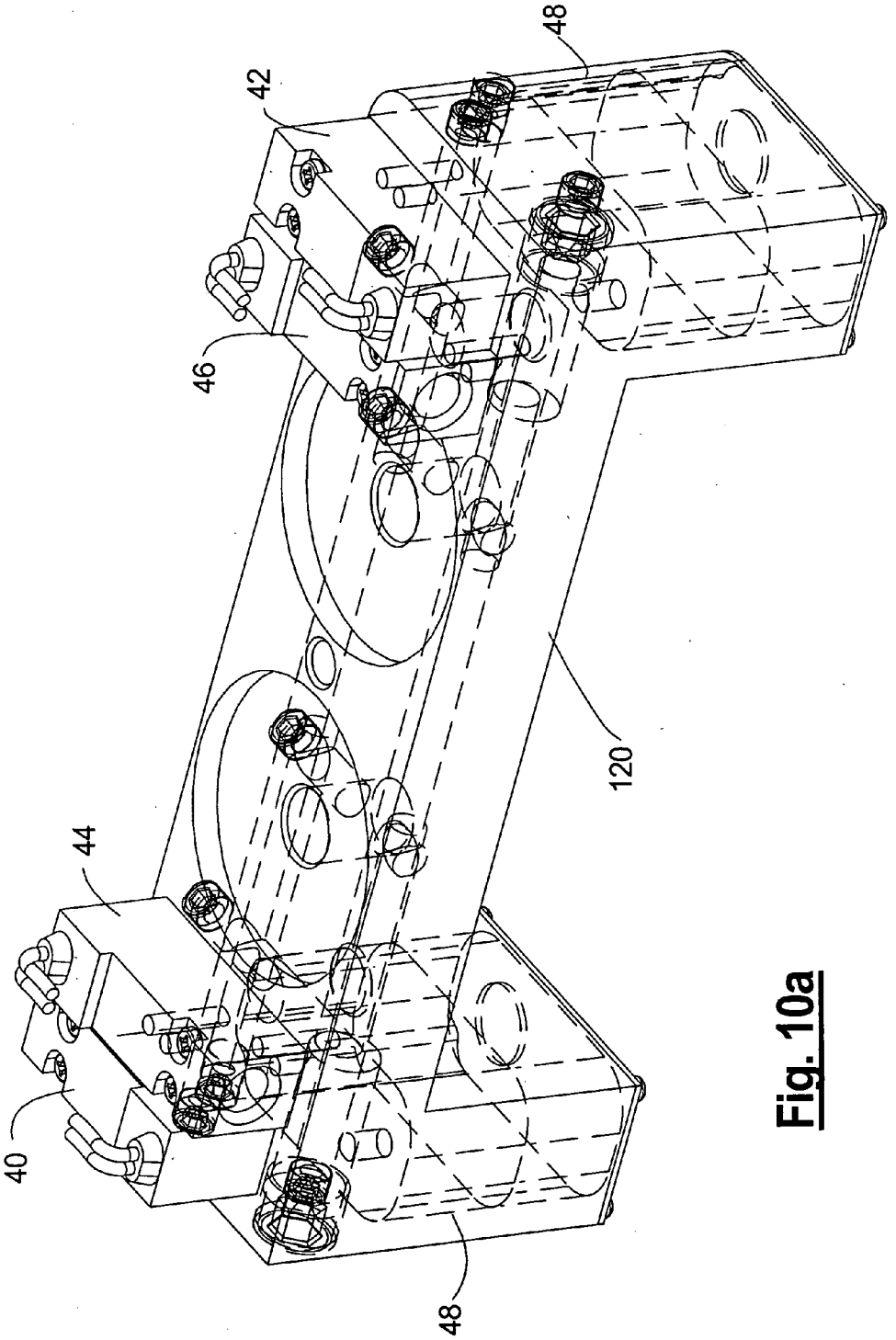

Fig. 10a

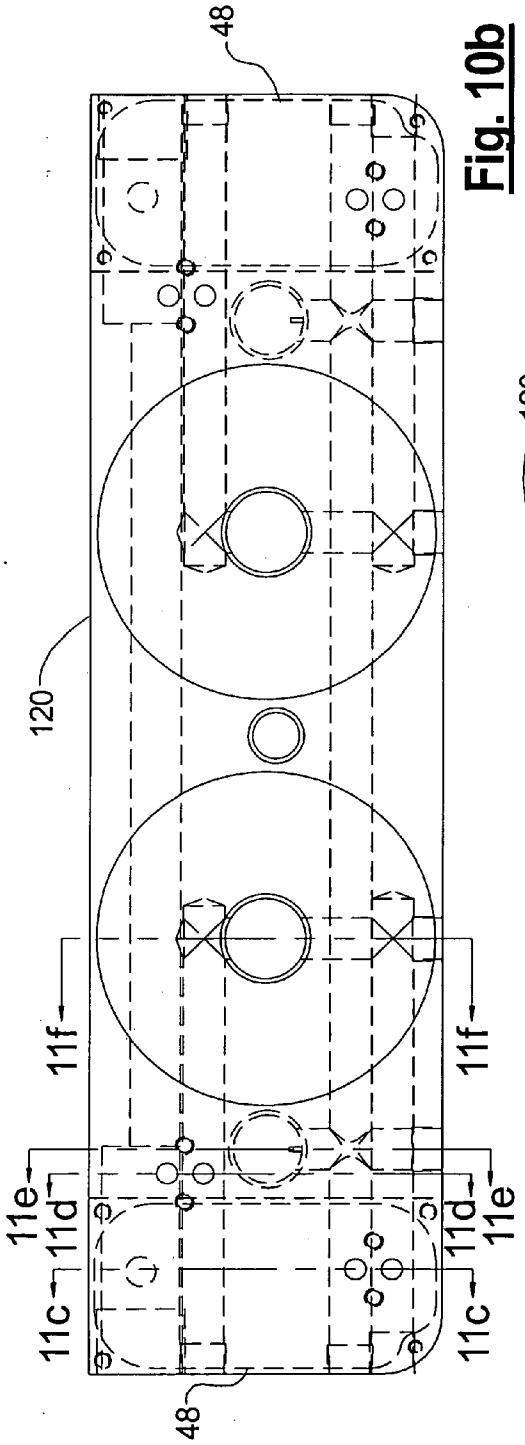

Fig. 10b

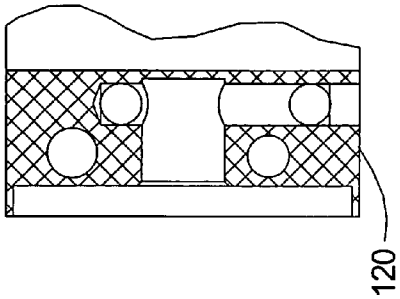

Fig. 10f

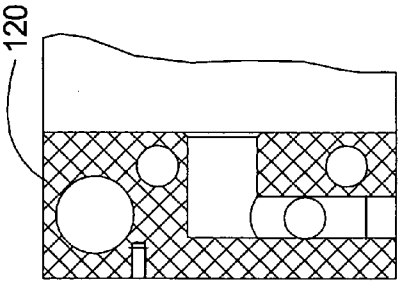

Fig. 10e

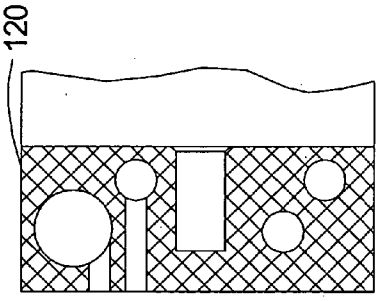

Fig. 10d

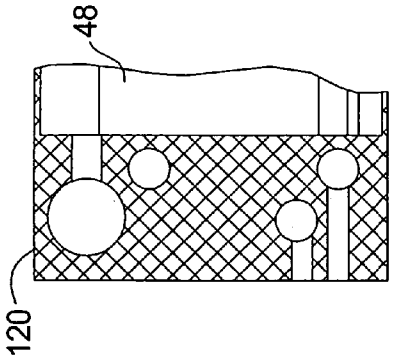

Fig. 10c

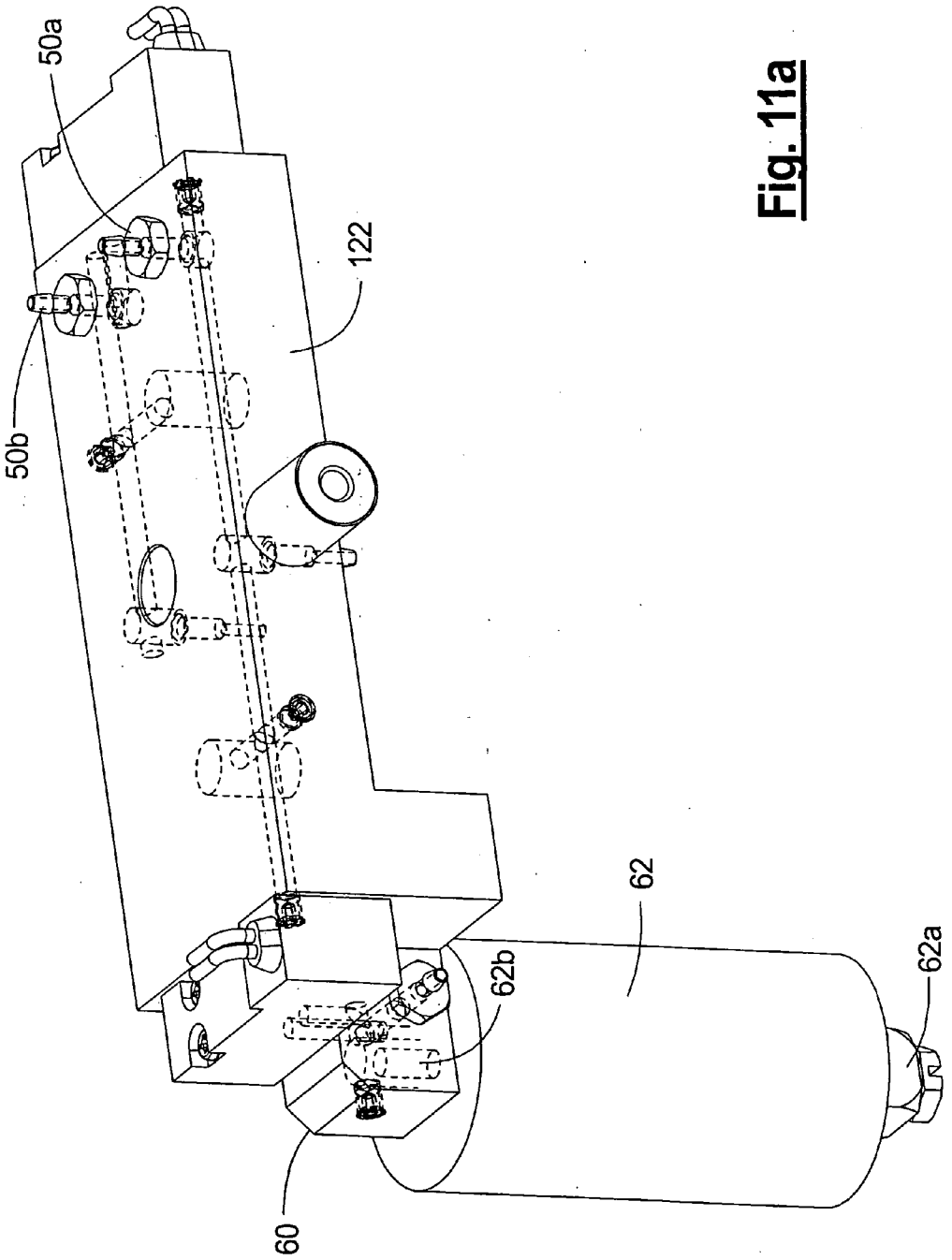

Fig. 11a

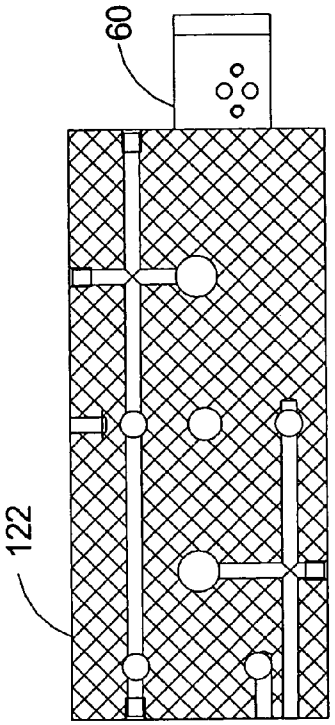

Fig. 11d

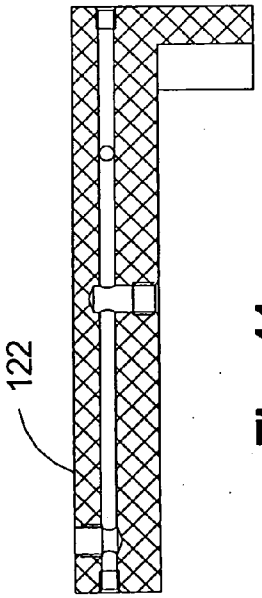

Fig. 11c

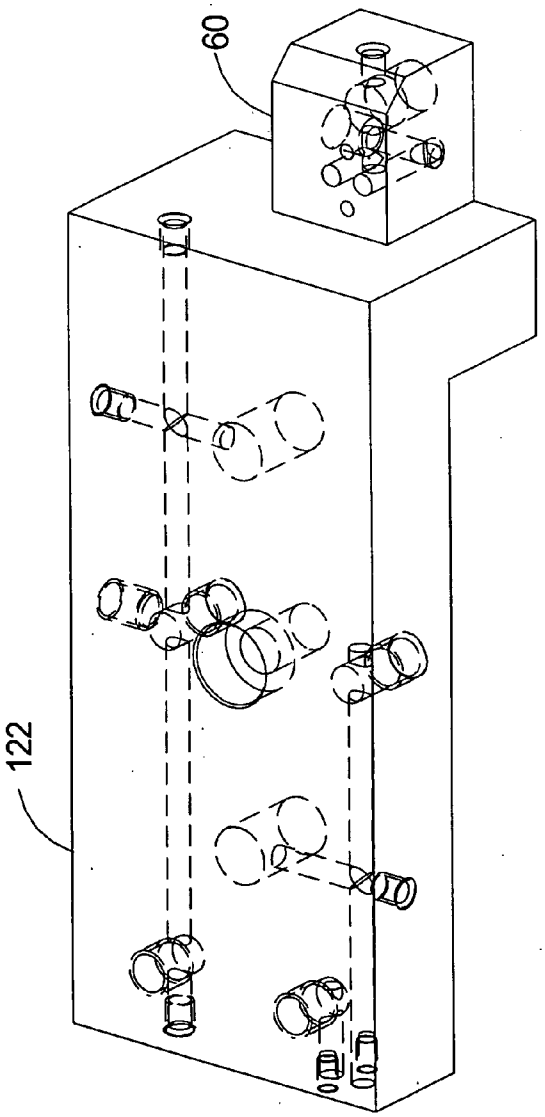

Fig. 11b

MINI-PORTABLE OXYGEN CONCENTRATOR

CROSS-REFERENCE TO RELATED APPLICATIONS

[0001] This application claims priority from U.S. Provisional Patent Application Ser. No. 60/617,834, filed Oct. 12, 2004.

FIELD OF THE INVENTION

[0002] This invention relates generally to gas concentration apparatus for separating gas mixtures by pressure swing adsorption ("PSA") and vacuum pressure swing adsorption ("VPSA"), and more particularly to PSA and VPSA apparatus intended to deliver oxygen for medical use.

BACKGROUND OF THE INVENTION

[0003] The general type and operating principles of PSA and VPSA, which are well known, are described, for example, in U.S. Pat. Nos. 3,564,816; 3,636,679; 3,717,974; 4,802,899; 5,531,807; 5,755,856; 5,871,564; 6,524,370; and 6,764,534, among others. Both PSA and VPSA apparatus may include one or more adsorbers, each having a fixed sieve bed of adsorbent material to fractionate at least one constituent gas from a gaseous mixture by adsorption into the bed, when the gaseous mixture from a feed stream is sequentially directed through the adsorbers in a co-current direction. While one adsorber performs adsorption, another adsorber is simultaneously purged of its adsorbed constituent gas. In a PSA apparatus, the purging is performed by part of the product gas being withdrawn from the first or producing adsorber and directed through the other adsorber in a counter-current direction. In a VPSA apparatus, the purging primarily is performed by a vacuum produced at the adsorber inlet to draw the purged gas from the adsorber. Once the other adsorber is purged, the feed stream at a preset time is then directed to the other adsorber in the co-current direction, so that the other adsorber performs adsorption. The first adsorber then is purged either simultaneously, or in another timed sequence if there are more than two adsorbers, all of which will be understood from a reading of the above described patents.

[0004] When, for example, such apparatus is used to produce a high concentration of oxygen from ambient air for use in various applications, whether medical, industrial or commercial, air which enters the apparatus typically contains about 78% nitrogen, 21% oxygen, 0.9% argon, and a variable amount of water vapor. Principally, most of the nitrogen is removed by the apparatus to produce a gas product, which for medical purposes, for example, typically may contain at least about 80% oxygen. Most such apparatus for medical uses generally are too bulky for use by patients who are traveling or otherwise wish to leave their home environments for any purpose. In those cases, patients will normally forego the use of oxygen concentrators and revert to the use of pressurized oxygen tanks. While oxygen tanks have been very useful in enabling patients to be more ambulatory, they nevertheless are restricted in use, as for example because of limited oxygen storage capacity or because their use may be prohibited in certain modes of public. transportation or locations where flammable materials can create a hazard. Although the useful life of oxygen tanks may be extended by the use of oxygen concentration devices ("OCD"), as disclosed, for example, in co-owned U.S. Pat. No. 6,427,690, McCombs et al., issued Aug. 6, 2002, their use nevertheless continues to be problematic because of safety and storage concerns, access to re-supplies of oxygen, and continuing medical expenses and reimbursement paperwork for the oxygen.

[0005] There having been developed a particularly useful and highly portable oxygen concentrator used for medical purposes and operating on PSA principles as disclosed in co-owned U.S. Pat. No. 6,764,534, McCombs et al., issued Jul. 20, 2004, the entire disclosure of which is incorporated by reference, the present invention builds on that knowledge by an even more compact, lighter weight and very highly portable oxygen concentrator for medical uses.

[0006] As is now well known, the most effective use of inhaled oxygen occurs at the onset of inhalation, and various devices have been constructed to deliver oxygen from pressurized oxygen tanks only when inhalation is first sensed by the devices and only during the initial stage of the inhalation cycle. U.S. Pat. No. 6,764,534, for example, discloses a system that primarily only delivers oxygen at the initial stage of inhalation by detecting a drop in pressure as sensed by inhalation of a user through a conventional cannula (not shown) to actuate a transducer circuitry causing a flow control valve to be opened for a predetermined time and allow a predetermined amount of the oxygen enriched gas to be delivered to the user in oxygen concentrations up to about 95%.

SUMMARY OF THE INVENTION

[0007] The present invention provides an oxygen concentrator apparatus that can operate by either PSA or VPSA principles, attain the required concentrations of oxygen for the desired application(s), yet be highly portable and easily manipulated and transported even by patients with relatively limited physical capacities. This is accomplished by a unique configuration of operating components combined in an inventive structural design.

[0008] The intended use of the apparatus is to deliver supplemental, high-purity oxygen to persons who suffer, for example, from various forms of chronic obstructive pulmonary disease (COPD). The invention preferably uses a two-bed concentrator together with an integrated OCD or flow controller to provide oxygen in predetermined doses up to an equivalent of about 3 liters per minute (LPM) effective rate of a continuous product gas with a high oxygen concentration at over 90%, and with an overall weight of only about 5 pounds.

BRIEF DESCRIPTION OF THE DRAWING

[0009] The foregoing and other objects, features and advantages of the invention will become more apparent from a reading of the following description in connection with the accompanying drawing of a preferred embodiment of the invention, in which:

[0010] **FIG. 1** is a schematic illustration of a combined PSA/OCD apparatus according to the invention;

[0011] **FIG. 2** is a schematic illustration of a combined VPSA/OCD apparatus according to the invention;

[0012] **FIG. 3** is a schematic illustration of an alternate flow controller used in the invention;

[0013] **FIGS. 4, 5** and **6** are a perspective view, a top view and a bottom view of an assembled preferred embodiment of the invention;

[0014] **FIG. 7** is an exploded view of the preferred embodiment;

[0015] **FIG. 8** is an assembled view of the operating components of the preferred embodiment;

[0016] **FIG. 9** is an exploded view of the operating components of the preferred embodiment;

[0017] **FIGS. 10***a*-**10***f* and **11***a*-**11***d* are isometric and cross-sectional views of the feed/waste manifold and of the product manifold, respectively, of the preferred embodiment; and

[0018] **FIGS. 12, 13***a,* and **13***b* are views of the compressor as used in the preferred embodiment.

DETAILED DESCRIPTION OF THE PREFERRED EMBODIMENT

[0019] Turning now to the drawings and in accordance with the present invention, there is shown a preferred embodiment, generally indicated as **20**, of a combined oxygen concentrator and oxygen conserving device **20** used for fractionating at least one component, namely nitrogen, from a gaseous mixture, generally but not necessarily ambient air, by pressure swing adsorption to produce a product gas, and for delivering the product gas at specific and variable intervals upon demand by a user.

[0020] With reference to **FIG. 1**, ambient air is supplied to a PSA/OCD apparatus **20** through a filtered intake **21** and an intake resonator **22** to decrease the noise from the intake of the ambient air feed stream. The feed stream continues from resonator **22** and is moved by a feed air compressor/heat exchanger assembly **24** alternatively to first and second adsorbers **30**, **32** through feed valves **40** and **42** respectively.

[0021] When the feed stream alternatively enters inlets **30***a,* **32***a* of adsorbers **30**, **32** in a co-current direction, the respective adsorber fractionates the feed stream into the desired concentration of product gas. The adsorbent material used for the beds to separate nitrogen from the ambient air may be a synthetic zeolite or other known adsorber material having equivalent properties.

[0022] The substantial or usable portion of the oxygen enriched product gas generated by the ambient air flowing in the co-current direction sequentially in each one of the adsorbers **30**, **32** is directed through the outlet **30***b,* **32***b* and check valve **34**, **36** of the corresponding adsorber to a product manifold **48** and then to a delivery control assembly **60**, as will be described. The balance of the product gas generated by each adsorber is timed to be diverted through a purge orifice **50** and a properly timed equalization valve **52** and an optional flow restrictor **53** to flow through the other adsorber **30** or **32** in the counter-current direction from the respective outlet **30***b,* **32***b* and to the respective inlet **30***a,* **32***a* of the other adsorber to purge the adsorbed, primarily nitrogen, gases. The counter-current product gas and purged gases then are discharged to the atmosphere from the adsorbers through properly timed waste valves **44**, **46**, common waste line **47** and a sound absorbing muffler **48**.

[0023] Control assembly **60**, to which the usable portion of the product gas directed according to the invention, includes a mixing tank **62** which also may be filled with synthetic zeolite and serves as a reservoir to store product oxygen before delivery to the user through an apparatus outlet **68** in the pulse dose mode, a piston-type pressure control regulator **64** to regulate the product gas pressure to be delivered to the user, a bacteria filter **66**, and an oxygen delivery system **70** including a pulse dose transducer **72** including the flow controller **80** to be described, a flow control solenoid operated valve **74**, and a low pressure sensor **72**. Delivery of the PSA generated oxygen concentrated gas from the mixing tank **62** to the user is controlled by the delivery system **70** as will be described.

[0024] A VPSA/OCD apparatus as schematically shown in **FIG. 2** operates in similar fashion as the PSA apparatus of **FIG. 1**, except that purge orifice **50** may be eliminated. In its stead, a vacuum pump **90** is provided in the common waste line **47** to draw the waste nitrogen alternately from each of adsorber beds **3032** upon the timed opening of the respective waste valve **44**, **46**. The cycling of ambient air and operation of the feed and waste valves to produce the oxygen enriched product gas, as well as of supply of product gas to mixing tank **62** and the delivery of the product gas by flow controller **80**, otherwise are as described with respect to **FIG. 1**.

[0025] As shown in **FIGS. 4 through 6**, apparatus **20** according to a preferred embodiment of the invention includes a front housing enclosure **104**, a rear housing enclosure **106**, and a central chassis **108** on which are mounted the majority of the operating components of the apparatus **20**. The outer housing portions **104**, **106** and chassis **108** may be of any suitable impact resistant material, but preferably is an injection molded ABS plastic. Chassis **108** as shown also includes a pivotable carry handle **109**.

[0026] Within front enclosure **104** is an access vent **110** by which ambient air in drawn through an air filter **112** by an internal fan **92** into the interior of apparatus **20**, and two side exhaust vents **114** by which cooling air circulating through the interior and waste gases from beds **30**,**32** are exhausted from apparatus **20**.

[0027] The effectiveness and highly compact size and light weight of the invention is made possible in large part because of a novel manifold structure and interconnection of the components of the invention as will now be described.

[0028] According to the invention, operating components of unique design are all assembled in an integrated configuration as illustrated in **FIGS. 7 through 13***b.* As shown, adsorber beds **30**, **32** are mounted vertically between and in fluid communication with both feed/waste manifold **120** and a product manifold **122**. Mounted to the sides of beds **30**, **32** on feed/waste manifold **120** are feed valves **40**, **42** and waste valves **44**, **46**, respectively. Below the valves and to provide fluid communication with both heads of double headed compressor **24** (to be described) are access fittings **124**, **126** fixed to feed/waste manifold **120** and connecting the outlets of compressor **24** to deliver the ambient air from compressor **24** to manifold **120**, where it is directed by internal channels to the respective feed valves **40**, **42** to be alternately fed through manifold **120** to beds **30**, **32**. In the VPSA embodiment of the invention, one of the compressor heads is configured to provide vacuum to remove the waste gases from both heads. In this embodiment, manifold **120** is configured to provide fluid connection from only the pres-

sure side of compressor **24** to both beds through the feed valves **40**, **42**, whereas manifold **120** has a separate fluid connection to the vacuum side of compressor **24**. through the waste valves **44**, **46** to both heads.

[**0029**] Product gas is delivered from beds **30**, **32** by fluid connection of bed outlets **30***b*, **32***b* to product manifold **122**, in which channels are cut to deliver product gas through fitting **122***a* and by tubing (not shown) to the inlet side **62***a* of mixing tank **62**. In the PSA embodiment of apparatus **20**, a portion of the product gas is redirected by purge orifice **50** connected between fittings **50***a* and **50***b* and equalization valve **52** to the idle adsorber bed, whereas in the VPSA embodiment, the purge orifice is eliminated and virtually all of the product gas is delivered to mixing tank **62**. Mixing tank **62** is mounted on product manifold **122** at its outlet side **62***b*, where it is in fluid connection through manifold **122** with delivery control assembly **60** also affixed to manifold **122** as shown.

[**0030**] The two beds **30**, **32**, the two manifolds **120**, **122** and compressor **24** are then held together as a compact unit, as shown, by a single elongated bolt **130** passing through manifolds **120**, **122**, between beds **30**, **32** and threaded to compressor **24**. The unit as assembled is then attached to central chassis **108** by suitable shock absorbing means. As thus constructed, it is apparent that the mechanical components of apparatus **20** can now be readily assembled in production and readily accessed for servicing.

[**0031**] With reference to **FIGS. 12, 13***a*, and **13***b*, a preferred compressor as used in the invention is the compact compressor **300** disclosed as a second embodiment of the invention disclosed in co-owned and co-pending U.S. non-provisional patent application Ser. No. 10/932,183,the entire disclosure of which is incorporated by reference herein. For the apparatus operating in the PSA mode, the compressor includes a single-shaft motor **302**, a central housing **316**, and two opposing pressure heads **304**, **306**. However, for operation in the VPSA mode, one head, e.g., **304** comprises the pressure-side compressor head, and head **306** the vacuum-side compressor head.

[**0032**] The motor **302** is a standard electric motor is securely mounted to the central housing **316** with the drive shaft **308** penetrating the central housing **316**. Central housing **316** is configured to support both compressor heads **304**, **306**, each of which as disclosed in the above identified non-provisional application includes an inlet chamber with an inlet filter, an outlet chamber with an outlet filter, a counterweight **309**, a drive shaft support plate **314**, and a drive shaft support bearing **315**. Depending on the function and the gases to be moved, one of the compressor heads **304**, **306** may have a longer stroke and therefore have a larger eccentric core. The counterweight **309** is configured to even out the weight distribution on the drive shaft **308** to thereby reduce vibration of the drive shaft **308**. The drive shaft support plate **314** closes the central housing **316** and supports the drive shaft support bearing **315**, which supports the free end of the drive shaft **308**.

[**0033**] In the VPSA mode in which one compressor head supplies pressure and the other compressor head supplies a vacuum, the pressure-side compressor head **304** includes a pressure-side piston assembly **330** and a pressure-side chamber assembly **331**. The pressure-side piston assembly **330** includes a pressure-side eccentric core **332**, a bearing **336**, a pressure-side piston **338**, a piston seal **346**, a pressure-side retaining plate **348**, and a pressure-side intake flapper **350**. The vacuum-side compressor head **306** includes a vacuum-side piston assembly and a vacuum-side chamber assembly. In this case, the vacuum-side eccentric core may have a different radius than the pressure-side eccentric core such that the vacuum-side piston assembly has a longer or shorter stroke than the pressure-side piston assembly **330**. Further, the vacuum-side eccentric core **432** may have a different phase than the pressure-side eccentric core **332**. For example, the vacuum-side eccentric core may be phased about 180° from the pressure-side eccentric core such that the vacuum-side piston assembly is at the top dead center position when the pressure-side piston assembly is also at the top dead center position.

[**0034**] Further details of the compressor and its operation in either or both PSA and VPSA modes will be clear from a reading of the co-pending non-provisional application.

[**0035**] In operation, ambient air is caused by fan **92** to enter the enclosed interior of apparatus **20** through inlet **110** on the front cover **104** and supporting a filter **112** of a gross-particulate foam, designed to remove dust and other impurities, from the air entering the apparatus interior. A portion of the ambient air which enters the interior of apparatus **20** is caused by the compressor **24** to flow into resonator **22** through a second filter made of felt material at intake **21** to further filter the air to be fractionated. The balance of the ambient air flowing into the interior of the apparatus **20** is caused by fan **92**, baffle **132**, and static flow directing vanes **134** to flow in a controlled path throughout the enclosed interior of the apparatus to cool the operating elements of apparatus **20** before exiting side exhaust vents **114**.

[**0036**] A combined PSA/OCD based on the preferred embodiment is easily able to deliver an oxygen concentration, at standard atmosphere in excess of about 90% in pulse doses at every inhalation cycle of about 8.75 mL for the setting of 1 LPM, about 17.5 mL for the setting of 2 LPM, and about 26.25 mL for the setting of 3 LPM. Quite surprisingly, this performance can be achieved in an apparatus with a weight of less than about 5 lb., measuring overall less than 4" (or about 3.6") in depth, less than 7" (or about 6.6") in width and less than 9" (or about 8.6") in height, and emitting less than about 55 decibels in noise level.

[**0037**] In the embodiments shown, each of the adsorber beds **30**, **32** for a medical application may have about a half liter capacity and be about 5.25 inches in length and about 1.375 inches in diameter, with the zeolite sieve material weighing about 50 grams for each adsorber bed. Preferably, the beds **30**, **32** are spring biased in order not to "fluidize" the sieve material in their depressurization or pressure equalization stages. The feed stream of air is provided at a nominal rate of about 6 LPM, to produce a product gas within an approximate operating system pressure range from about 27.7 psia to about 39.7 psia, with the setting at 3 LPM and a user breathing rate of about fifteen breaths per minute.

[**0038**] The circuit components on a printed circuit board **81** control the PSA cycle and the pulse dosing of oxygen from the apparatus. A flexible wiring strip **88** connects the accessible operating switches **86** and indicators on control panel **84** to the circuit board **81**.

[**0039**] Those PSA operating components may be as shown and configured to operate as described in U.S. Pat.

No. 6,764,534. In an alternate embodiment as shown by **FIG. 3**, the operation may be as described in co-pending provisional application entitled Oxygen Conserving Device with Variable Pulse Times (Attorney Docket 3011174) and filed on or about even date herewith. In that embodiment, the apparatus as partially shown in **FIG. 3** does not use a pressure regulator. As described in the above identified co-pending application, the desired volume of oxygen to be delivered on inhalation is determined by a sensing of the "volume" pressure by pressure transducer **84** at the mixing tank **62**, which then when read by microprocessor **82** in conjunction with a reading of the operating cycle stage will access the look-up table for the selected flow setting and cause the flow control demand valve **74** to be opened for the time specified in the table.

[**0040**] Maximum breathing rates for the apparatus have been determined for the combination of each flow control switch setting and range of voltages that control the apparatus. Preferably, the apparatus is designed to operate in three settings of 1, 2 and 3 liters per minute (LPM) with an overall PSA cycle time of 11 seconds.

[**0041**] The concentration of the oxygen supplied by the apparatus for each setting of flow control switches **86** is dependent on system pressure, operating voltage (battery or external supply), and patient breathing rate within allowable ranges of these parameters. As in the embodiment shown in U.S. Pat. No. 6,764,534, the microprocessor calculates, from continuous or sampled readings of the selector position, the operating voltage, and the frequency of actuation of the flow controller **80**, the predictable oxygen concentration being delivered to the user. If any of these approach the upper or lower thresholds, for example as low as 85% oxygen concentration, an intermittent alarm may be provided to warn the user that he or she can continue to use the apparatus but should take action to prevent the performance from falling outside of specifications. If any of the parameters regularly exceeds the predetermined thresholds, for example at a calculated oxygen concentration of 80% or less, the alarm may be programmed to sound continuously to notify the user that the performance of apparatus **20** is outside of specifications and its use discontinued.

[**0042**] For example, although the apparatus has been designed to accommodate reasonable breathing rates, a very significant increase in the physical activity of a user and the resulting increased breathing rate could cause the apparatus to be overdrawn by a demand of oxygen from the apparatus **20** more than it can supply. The embodiment shown preferably includes an audible signal at startup of the apparatus, both audible and a red visual light alarms to signal high and low pressure, system overdraw, and an apnea event (i.e., the absence of inhalation within a preset time), audible and yellow visual light alarms to signal a low battery condition, and a pulsing green light to indicate normal apparatus operation in a pulse mode.

[**0043**] The flow controller **80** continuously monitors the battery voltage, flow control switch setting, and the patient's breathing rate. If the breathing rate causes the apparatus to approach an overdraw condition (an oxygen concentration of about 85%) or to reach overdraw (a concentration of about 80% or less), the alarm either warns or alerts the patient to moderate his or her physical activity.

[**0044**] As in the embodiment shown in U.S. Pat. No. 6,764,534, the apparatus **20** may be powered by internal battery **98** or an external power supply that also can charge the internal battery. Also, the operating cycle may be controlled to function in the sequence and for the times disclosed as in U.S. Pat. No. 6,764,534 or other times suitable to the desired product gas output selections. Similarly, the circuitry, alarms and indicators may function in like manner. For example, in the embodiment described above and as shown in U.S. Pat. No. 6,764,534, the microprocessor monitors battery voltage, system pressure and flow rate; additional embodiments may include an oxygen monitoring system with the use of a blood oxygen sensor connectable to the user to measure the actual rather than the calculated concentration of oxygen being delivered to the user. In addition, those skilled in the art may be able to include other known safety features for use in monitored and/or unmonitored medical purposes.

[**0045**] It will be understood that various modifications and substitutions may be made to the described embodiment without departing from the spirit of the invention. Accordingly, the described preferred embodiment is intended for purposes of illustration and not as a limitation.

What is claimed is:

1. A compact and portable oxygen delivery apparatus for medical uses by producing from ambient air a product gas having a high concentration of oxygen and delivering the product gas to a user of the apparatus, the apparatus comprising means for receiving the product gas, at least two adsorber beds, each having an inlet at one end and an outlet at another end, a first manifold on which the beds are mounted at their inlet ends, a second manifold on which the beds are mounted at their outlet ends, means for detachably retaining the two beds and the manifolds together as an operating unit, means for drawing ambient air into the apparatus, means for discharging waste gases from the apparatus, means within the first manifold for providing fluid connection of the bed inlets with the drawing means and the discharging means, means within the second manifold for providing fluid connection of the bed outlets with the product gas receiving means; and means for delivering the product gas to the user at selectable times.

2. The apparatus according to claim 1, in which the drawing means comprises a compressor to supply the ambient air under pressure to each of the adsorber beds, and the compressor is detachably mounted on the first manifold as part of the operating unit.

3. The apparatus according to claim 1, in which the product gas receiving means comprises a mixing tank detachably mounted on the second manifold as part of the operating unit.

4. The apparatus according to claim 1, in which the product gas delivering means comprises a valve actuated by inhalation by the user and detachably mounted on the second manifold as part of the operating unit.

5. The apparatus according to claim 4, and further comprising at least one inlet valve in fluid connection between the ambient air drawing means and one of the bed inlets to control the flow of ambient air into the adsorber bed, the inlet valve detachably mounted on the first manifold as part of the operating unit.

6. The apparatus according to claim 4, and further comprising at least one waste valve in fluid connection between the discharging means and one of the bed inlets to control the flow of waste gases from the adsorber bed, the waste valve detachably mounted on the first manifold as part of the operating unit.

* * * * *