UNITED STATES PATENT AND TRADEMARK OFFICE

UNITED STATES DEPARTMENT OF COMMERCE
United States Patent and Trademark Office
Address: COMMISSIONER FOR PATENTS
P.O. Box 1450
Alexandria, Virginia 22313-1450
www.uspto.gov

APPLICATION NUMBER	PATENT NUMBER	GROUP ART UNIT	FILE WRAPPER LOCATION
60/617,834			

Correspondence Address / Fee Address Change

The following fields have been set to Customer Number 44331 on 11/09/2006

- Correspondence Address
- Maintenance Fee Address

The address of record for Customer Number 44331 is:
HISCOCK & BARCLAY, LLP
2000 HSBC PLAZA
ROCHESTER,NY 14604-2404

HISCOCK & BARCLAY LLP
BUFFALO • ROCHESTER • SYRACUSE • ALBANY • NEW YORK

2000 HSBC PLAZA
ROCHESTER / NEW YORK 14604-2400
T 585.325.7570 / F 585.325.5458

OIPE JC131
DEC 1 0 2004
PATENT & TRADEMARK OFFICE

RONALD S. KAREKEN
OF COUNSEL

DIRECT DIAL 585.295.4440
DIRECT FAX 585.295.8451
RKAREKEN@HISCOCKBARCLAY.COM
ALSO ADMITTED IN: VIRGINIA AND DISTRICT OF COLUMBIA

December 7, 2004

Mail Stop: Missing Parts
Commissioner for Patents
P.O. Box 1450
Alexandria, VA 22313-1450

Provisional Patent Appl. No.	60/617,834
Filing Date	October 12, 2004
First Named Inventor	Norman R. McCombs
Attorney Docket Number	3011165 US01
Invention:	MINI-PORTABLE OXYGEN CONCETRATOR

RESPONSE TO NOTICE OF OMITTED ITEM(S) IN A PROVISIONAL APPLICATION

In response to the enclosed November 10, 2004 Notice, Applicants will accept the original filing date of the application as received by the Office, notwithstanding the apparent absence of Figures 12 and 13a-b. Applicants are satisfied that the content of Figures 12 and 13a-b is fully disclosed by the incorporation by express reference on page 6 of the specification to the second embodiment of the invention disclosed in co-pending U.S. non-provisional application Serial No. 10/932,183, containing the identical figures as Figures 15b and 16a-b.

Although not believed to be required, the Commissioner is hereby authorized to charge any payment deficiencies or credit any excess payments to our Deposit Account No. **50-3010**.

Please date stamp and return the attached postcard to indicate your receipt of this letter and direct all correspondence in connection with the application to the undersigned at the address noted above.

Very truly yours,

Ronald S. Kareken, Esq.
Reg. No.: 20,573

RSK:WMH

CERTIFICATE OF MAILING BY "First Class Mail" (37 CFR 1.8)

I hereby certify that this correspondence, with the enclosed copy of the November 10, 2004 Notice and Acknowledgment Postcard, are being deposited with the United States Postal Service as first class mail, postage prepaid, in an envelope addressed to: Mail Stop: Missing Parts, Commissioner of Patents, P.O. Box 1450 Alexandria, VA 22313-1450, on December 7, 2004.

Andrew H. Yost

IFW

UNITED STATES PATENT AND TRADEMARK OFFICE

UNITED STATES DEPARTMENT OF COMMERCE
United States Patent and Trademark Office
Address: COMMISSIONER FOR PATENTS
P.O. Box 1450
Alexandria, Virginia 22313-1450
www.uspto.gov

APPLICATION NUMBER	FILING OR 371 (c) DATE	FIRST NAMED APPLICANT	ATTORNEY DOCKET NUMBER
60/617,834	10/12/2004	Norman R. McCombs	3011165 US01

OIPE JC131
DEC 1 0 2004
PATENT & TRADEMARK OFFICE

CONFIRMATION NO. 1282

FORMALITIES LETTER

OC000000014333329

44331
HISCOCK & BARCLAY, LLP
2000 HSBC PLAZA
ROCHESTER, NY 14604-2404

Date Mailed: 11/10/2004

NOTICE OF OMITTED ITEM(S) IN A PROVISIONAL APPLICATION

FILED UNDER 37 CFR 1.53(c)

A filing date has been accorded to the above-identified provisional application papers; however, the following item (s) appear to have been omitted from the application:

- Figure(s) **12 & 13a-b** described in the specification.

Should applicant contend that the above-noted omitted item(s) was in fact deposited in the U.S. Patent and Trademark Office (USPTO) with the provisional application papers, a copy of this Notice and a petition (and $130.00 petition fee *(37 CFR 1.17(h))*, which will be refunded if it is determined that the item was in fact received by the USPTO), with evidence of such deposit must be filed within **TWO MONTHS** of the date of this Notice. Petitions should be mailed to: Mail Stop Petitions, Commissioner for Patents, P.O. Box 1450, Alexandria VA 22313-1450.

The failure to file a petition (and petition fee) within **TWO MONTHS** of the date of this Notice *(37 CFR 1.181(f))* will be treated as a constructive acceptance by the applicant of the provisional application as deposited in the USPTO. **THIS TWO MONTH PERIOD IS NOT EXTENDABLE UNDER 37 CFR 1.136(a) OR (b)**. In the absence of a timely petition in reply to this Notice, the application will maintain a filing date as of the date of deposit of the application papers in the USPTO, and original application papers (*i.e.*, the original disclosure of the invention) will include only those application papers present in the USPTO on the date of deposit.

Replies should be mailed to: Mail Stop Missing Parts
Commissioner for Patents
P.O. Box 1450
Alexandria VA 22313-1450

A copy of this notice MUST be returned with the reply.

Syed Ameen
Customer Service Center

Initial Patent Examination Division (703) 308-1202
PART 2 - COPY TO BE RETURNED WITH RESPONSE

OIPE JC131
DEC 1 0 2004
PATENT & TRADEMARK OFFICE

UNITED STATES PATENT AND TRADEMARK OFFICE

UNITED STATES DEPARTMENT OF COMMERCE
United States Patent and Trademark Office
Address: COMMISSIONER FOR PATENTS
P.O. Box 1450
Alexandria, Virginia 22313-1450
www.uspto.gov

APPLICATION NUMBER	FILING OR 371 (c) DATE	FIRST NAMED APPLICANT	ATTORNEY DOCKET NUMBER
60/617,834	10/12/2004	Norman R. McCombs	3011165 US01

CONFIRMATION NO. 1282

FORMALITIES LETTER

OC000000014333329

44331
HISCOCK & BARCLAY, LLP
2000 HSBC PLAZA
ROCHESTER, NY 14604-2404

Date Mailed: 11/10/2004

NOTICE OF OMITTED ITEM(S) IN A PROVISIONAL APPLICATION

FILED UNDER 37 CFR 1.53(c)

A filing date has been accorded to the above-identified provisional application papers; however, the following item (s) appear to have been omitted from the application:

- Figure(s) **12 & 13a-b** described in the specification.

Should applicant contend that the above-noted omitted item(s) was in fact deposited in the U.S. Patent and Trademark Office (USPTO) with the provisional application papers, a copy of this Notice and a petition (and $130.00 petition fee *(37 CFR 1.17(h))*, which will be refunded if it is determined that the item was in fact received by the USPTO), with evidence of such deposit must be filed within **TWO MONTHS** of the date of this Notice. Petitions should be mailed to: Mail Stop Petitions, Commissioner for Patents, P.O. Box 1450, Alexandria VA 22313-1450.

The failure to file a petition (and petition fee) within **TWO MONTHS** of the date of this Notice *(37 CFR 1.181(f))* will be treated as a constructive acceptance by the applicant of the provisional application as deposited in the USPTO. **THIS TWO MONTH PERIOD IS NOT EXTENDABLE UNDER 37 CFR 1.136(a) OR (b)**. In the absence of a timely petition in reply to this Notice, the application will maintain a filing date as of the date of deposit of the application papers in the USPTO, and original application papers (*i.e.*, the original disclosure of the invention) will include only those application papers present in the USPTO on the date of deposit.

Replies should be mailed to: Mail Stop Missing Parts
Commissioner for Patents
P.O. Box 1450
Alexandria VA 22313-1450

A copy of this notice MUST be returned with the reply.

Syed Abedin
Customer Service Center

Initial Patent Examination Division (703) 308-1202
PART 3 - OFFICE COPY

HISCOCK & BARCLAY

BUFFALO • ROCHESTER • SYRACUSE • ALBANY • NEW YORK

101204 21861 U.S.PTO

PTO/SB/16 (04-04)
Approved for use through 07/31/2006. OMB 0651-0032
U.S. Patent and Trademark Office; U.S. DEPARTMENT OF COMMERCE

Under the Paperwork Reduction Act of 1995, no persons are required to respond to a collection of information unless it displays a valid OMB control number.

PROVISIONAL APPLICATION FOR PATENT COVER SHEET

This is a request for filing a PROVISIONAL APPLICATION FOR PATENT under 37 CFR 1.53 (c).

Express Mail Label No. ED 170638486 US

15535 U.S.PTO 60/617834 101204

INVENTOR(S)

Given Name (first and middle [if any])	Family Name or Surname	Residence (City and either State or Foreign Country)
Norman R.	McCombs	Tonawanda, NY
Robert	Bosinski	West Seneca, NY

Additional inventors are being named on the _____ separately numbered sheets attached hereto

TITLE OF THE INVENTION (500 characters max)

MINI-PORTABLE OXYGEN CONCENTRATOR

Direct all correspondence to: **CORRESPONDENCE ADDRESS**

☒ Customer Number 44,331

OR

☐ Firm or Individual Name	Hiscock & Barclay, LLP				
Address					
Address					
City		State		Zip	
Country		Telephone		Fax	

ENCLOSED APPLICATION PARTS ***(check all that apply)***

☒ Specification *Number of Pages* 12 ☐ CD(s), Number ____

☒ Drawing(s) *Number of Sheets* 12 ☐ Other (specify) ____

☐ Application Data Sheet. See 37 CFR 1.76

METHOD OF PAYMENT OF FILING FEES FOR THIS PROVISIONAL APPLICATION FOR PATENT

☒ Applicant claims small entity status. See 37 CFR 1.27.

☐ A check or money order is enclosed to cover the filing fees

☒ The Director is hereby authorized to charge filing fees or credit any overpayment to Deposit Account Number: 50-3010

☐ Payment by credit card. Form PTO-2038 is attached.

FILING FEE Amount ($): 80.00

The invention was made by an agency of the United States Government or under a contract with an agency of the United States Government.

☒ No.

☐ Yes, the name of the U.S. Government agency and the Government contract number are: _____.

[Page 1 of 2]

Respectfully submitted,

SIGNATURE _____ Date October 12, 2004

TYPED or PRINTED NAME Ronald S. Kareken, Esq. REGISTRATION NO. (*if appropriate*) 20,573

TELEPHONE (585) 295-4440 Docket Number: 3011165 US01

USE ONLY FOR FILING A PROVISIONAL APPLICATION FOR PATENT

This collection of information is required by 37 CFR 1.51. The information is required to obtain or retain a benefit by the public which is to file (and by the USPTO to process) an application. Confidentiality is governed by 35 U.S.C. 122 and 37 CFR 1.14. This collection is estimated to take 8 hours to complete, including gathering, preparing, and submitting the completed application form to the USPTO. Time will vary depending upon the individual case. Any comments on the amount of time you require to complete this form and/or suggestions for reducing this burden, should be sent to the Chief Information Officer, U.S. Patent and Trademark Office, U.S. Department of Commerce, P.O. Box 1450, Alexandria, VA 22313-1450. DO NOT SEND FEES OR COMPLETED FORMS TO THIS ADDRESS. **SEND TO: Commissioner for Patents, P.O. Box 1450, Alexandria, VA 22313-1450.**

If you need assistance in completing the form, call 1-800-PTO-9199 and select option

PROVISIONAL APPLICATION COVER SHEET
Additional Page

PTO/SB/16 (04-04)
Approved for use through 07/31/2006. OMB 0651-0032
Patent and Trademark Office; U.S. DEPARTMENT OF COMMERCE
Under the Paperwork Reduction Act of 1995, no persons are required to respond to a collection of information unless it displays a valid OMB control number.

Docket Number 3011165 US01

INVENTOR(S)/APPLICANT(S)

Given Name (first and middle [if any])	Family or Surname	Residence (City and either State or Foreign Country)
Robert E.	Casey	Buffalo, NY
Michael A.	Chimiak	Williamsville, NY

[Page 2 of 2]

Number 2 of 2

WARNING: Information on this form may become public. Credit card information should not be included on this form. Provide credit card information and authorization on PTO-2038.

HISCOCK & BARCLAY
BUFFALO • ROCHESTER • SYRACUSE • ALBANY • NEW YORK

2000 HSBC PLAZA
ROCHESTER / NEW YORK 14604-2404
T 585.325.7570 / F 585.325.5458

RONALD S. KAREKEN
OF COUNSEL

DIRECT DIAL 585.295.4440
DIRECT FAX 585.295.8451
RKAREKEN@HISCOCKBARCLAY.COM
ALSO ADMITTED IN: VIRGINIA AND DISTRICT OF COLUMBIA

10/12/04 U.S. PTO

October 12, 2004

Via Express Mail ED 170638486 US

Commissioner for Patents
P.O. Box 1450
Alexandria, VA 22313-1450

Provisional Patent Application Number	TBD
Filing Date	Herewith
First Named Inventor	McCombs et al.
Art Unit	TBD
Examiner Name	Unknown
Attorney Docket Number	3011165 US01
Invention:	MINI-PORTABLE OXYGEN CONCENTRATOR

We enclose for filing a Provisional Patent Application under 37 CFR 1.53(c), as follows:

- Provisional Application Cover Sheet (2 Pages + 1 Duplicate);
- Specification and Claims (12 Pages);
- Drawings (12 Sheets)
- Acknowledgment Postcard.

The Commissioner is hereby authorized to charge the filing fee of $ 80.00 and to charge any deficiencies or credit any excess payments to our Deposit Account No. **50-3010**.

Please date stamp and return the attached postcard to indicate your receipt of the application and direct all correspondence in connection with the application to the undersigned at the address noted above.

Very truly yours,

Ronald S. Kareken, Esq.
Reg. No.: 20,573

RSK:AHY
Enclosures

ROCHDOCS\348056\1

Express Mail No.: ED 170638486 US

CERTIFICATE OF MAILING BY "EXPRESS MAIL"
(37 CFR 1.10)

I herby certify that the following documents are being deposited with the United States Postal Service "Express Mail Post Office to Addressee" service under 37 CFR 1.10 in an envelope address to Commissioner for Patents, P.O. Box 1450, Alexandria, VA 22313-1450 on October 12, 2004.

- Provisional Application Cover Sheet (2 Pages + 1 Duplicate);
- Specification and Claims (12 Pages);
- Drawings (12 Sheets)
- Acknowledgment Postcard.

Andrew H. Yost

ROCHDOCS\348056\1

Express Mail No.: ED 170638486 US
Attorney Docket No.: 3011165 US01
Filed: October 12, 2004

MINI-PORTABLE OXYGEN CONCENTRATOR

This invention relates generally to gas concentration apparatus for separating gas mixtures by pressure swing adsorption ("PSA") and vacuum pressure swing adsorption ("VPSA"), and more particularly to PSA and VPSA apparatus intended to deliver oxygen for medical use.

BACKGROUND OF THE INVENTION

The general type and operating principles of PSA and VPSA, which are well known, are described, for example, in U.S. Patent Nos. 3,564,816; 3,636,679; 3,717,974; 4,802,899; 5,531,807; 5,755,856; 5,871,564; 6,524,370; and 6,764,534, among others. Both PSA and VPSA apparatus may include one or more adsorbers, each having a fixed sieve bed of adsorbent material to fractionate at least one constituent gas from a gaseous mixture by adsorption into the bed, when the gaseous mixture from a feed stream is sequentially directed through the adsorbers in a co-current direction. While one adsorber performs adsorption, another adsorber is simultaneously purged of its adsorbed constituent gas. In a PSA apparatus, the purging is performed by part of the product gas being withdrawn from the first or producing adsorber and directed through the other adsorber in a counter-current direction. In a VPSA apparatus, the purging primarily is performed by a vacuum produced at the adsorber inlet to draw the purged gas from the adsorber. Once the other adsorber is purged, the feed stream at a preset time is then directed to the other adsorber in the co-current direction, so that the other adsorber performs adsorption. The first adsorber then is purged either simultaneously, or in another timed sequence if there are more than two adsorbers, all of which will be understood from a reading of the above described patents.

When, for example, such apparatus is used to produce a high concentration of oxygen from ambient air for use in various applications, whether medical, industrial or commercial, air which enters the apparatus typically contains about 78% nitrogen, 21% oxygen, 0.9% argon, and a variable amount of water vapor. Principally, most of the nitrogen is removed by the apparatus to produce a gas product, which for medical purposes, for example, typically may contain at least about 80% oxygen. Most such apparatus for medical uses generally are too bulky for use by patients who are traveling or otherwise wish to leave their home environments for any purpose.

In those cases, patients will normally forego the use of oxygen concentrators and revert to the use of pressurized oxygen tanks. While oxygen tanks have been very useful in enabling patients to be more ambulatory, they nevertheless are restricted in use, as for example because of limited oxygen storage capacity or because their use may be prohibited in certain modes of public transportation or locations where flammable materials can create a hazard. Although the useful life of oxygen tanks may be extended by the use of oxygen concentration devices ("OCD"), as disclosed, for example, in co-owned U.S. Patent No. 6,427,690, McCombs et al., issued August 6, 2002, their use nevertheless continues to be problematic because of safety and storage concerns, access to re-supplies of oxygen, and continuing medical expenses and reimbursement paperwork for the oxygen.

There having been developed a particularly useful and highly portable oxygen concentrator used for medical purposes and operating on PSA principles as disclosed in co-owned U.S. Patent No. 6,764,534, McCombs et al., issued July 20, 2004, the entire disclosure of which is incorporated by reference, the present invention builds on that knowledge by an even more compact, lighter weight and very highly portable oxygen concentrator for medical uses.

As is now well known, the most effective use of inhaled oxygen occurs at the onset of inhalation, and various devices have been constructed to deliver oxygen from pressurized oxygen tanks only when inhalation is first sensed by the devices and only during the initial stage of the inhalation cycle. U.S. Patent No. 6,764,534, for example, discloses a system that primarily only delivers oxygen at the initial stage of inhalation by detecting a drop in pressure as sensed by inhalation of a user through a conventional cannula (not shown) to actuate a transducer circuitry causing a flow control valve to be opened for a predetermined time and allow a predetermined amount of the oxygen enriched gas to be delivered to the user in oxygen concentrations up to about 95%.

SUMMARY OF THE INVENTION

The present invention provides an oxygen concentrator apparatus that can operate by either PSA or VPSA principles, attain the required concentrations of oxygen for the desired application(s), yet be highly portable and easily manipulated and transported even by patients with relatively limited physical capacities. This is accomplished by a unique configuration of operating components combined in an inventive structural design.

The intended use of the apparatus is to deliver supplemental, high-purity oxygen to persons who suffer, for example, from various forms of chronic obstructive pulmonary disease (COPD). The invention preferably uses a two-bed concentrator together with an integrated OCD or flow controller to provide oxygen in predetermined doses up to an equivalent of about 3 liters per minute (LPM) effective rate of a continuous product gas with a high oxygen concentration at over 90%, and with an overall weight of only about 5 pounds.

BRIEF DESCRIPTION OF THE DRAWING

The foregoing and other objects, features and advantages of the invention will become more apparent from a reading of the following description in connection with the accompanying drawing of a preferred embodiment of the invention, in which:

FIG. 1 is a schematic illustration of a combined PSA/OCD apparatus according to the invention;

FIG. 2 is a schematic illustration of a combined VPSA/OCD apparatus according to the invention;

FIG. 3 is a schematic illustration of an alternate flow controller used in the invention;

FIGS. 4, 5 and 6 are a perspective view, a top view and a bottom view of an assembled preferred embodiment of the invention;

FIG. 7 is an exploded view of the preferred embodiment;

FIG. 8 is an assembled view of the operating components of the preferred embodiment;

FIG. 9 is an exploded view of the operating components of the preferred embodiment;

FIGS. 10a – 10f and 11a – 11d are isometric and cross-sectional views of the feed/waste manifold and of the product manifold, respectively, of the preferred embodiment; and

FIGS. 12, 13a, and 13b are views of the compressor as used in the preferred embodiment.

DETAILED DESCRIPTION OF THE PREFERRED EMBODIMENT

Turning now to the drawings and in accordance with the present invention, there is shown a preferred embodiment, generally indicated as 20, of a combined oxygen concentrator and oxygen conserving device 20 used for fractionating at least one component, namely nitrogen, from a gaseous mixture, generally but not necessarily ambient air, by pressure swing adsorption to produce a product gas, and for delivering the product gas at specific and variable intervals upon demand by a user.

With reference to FIG. 1, ambient air is supplied to a PSA/OCD apparatus 20 through a filtered intake 21 and an intake resonator 22 to decrease the noise from the intake of the ambient air feed stream. The feed stream continues from resonator 22 and is moved by a feed air compressor/heat exchanger assembly 24 alternatively to first and second adsorbers 30, 32 through feed valves 40 and 42 respectively.

When the feed stream alternatively enters inlets 30a, 32a of adsorbers 30, 32 in a co-current direction, the respective adsorber fractionates the feed stream into the desired concentration of product gas. The adsorbent material used for the beds to separate nitrogen from the ambient air may be a synthetic zeolite or other known adsorber material having equivalent properties.

The substantial or usable portion of the oxygen enriched product gas generated by the ambient air flowing in the co-current direction sequentially in each one of the adsorbers 30, 32 is directed through the outlet 30b, 32b and check valve 34, 36 of the corresponding adsorber to a product manifold 48 and then to a delivery control assembly 60, as will be described. The balance of the product gas generated by each adsorber is timed to be diverted through a purge orifice 50 and a properly timed equalization valve 52 and an optional flow restrictor 53 to flow through the other adsorber 30 or 32 in the counter-current direction from the respective outlet 30b, 32b and to the respective inlet 30a, 32a of the other adsorber to purge the adsorbed, primarily nitrogen, gases. The counter-current product gas and purged gases then are discharged to the atmosphere from the adsorbers through properly timed waste valves 44, 46, common waste line 47 and a sound absorbing muffler 48.

Control assembly 60, to which the usable portion of the product gas directed according to the invention, includes a mixing tank 62 which also may be filled with synthetic zeolite and serves as a reservoir to store product oxygen before delivery to the user through an apparatus outlet 68 in the pulse dose mode, a piston-type pressure control regulator 64 to regulate the product gas pressure to be delivered to the user, a bacteria filter 66, and an oxygen delivery system 70 including a pulse dose transducer 72 including the flow controller 80 to be described, a flow control solenoid operated valve 74, and a low pressure sensor 72. Delivery of the PSA generated oxygen concentrated gas from the mixing tank 62 to the user is controlled by the delivery system 70 as will be described.

A VPSA/OCD apparatus as schematically shown in FIG. 2 operates in similar fashion as the PSA apparatus of FIG. 1, except that purge orifice 50 may be eliminated. In its stead, a vacuum pump 90 is provided in the common waste line 47 to draw the waste nitrogen alternately from each of adsorber beds 30 32 upon the timed opening of the respective waste valve 44, 46. The cycling of ambient air and operation of the feed and waste valves to produce the oxygen enriched product gas, as well as of supply of product gas to mixing tank 62 and the delivery of the product gas by flow controller 80, otherwise are as described with respect to FIG. 1.

As shown in FIGS. 4 through 6, apparatus 20 according to a preferred embodiment of the invention includes a front housing enclosure 104, a rear housing enclosure 106, and a central chassis 108 on which are mounted the majority of the operating components of the apparatus 20. The outer housing portions 104, 106 and chassis 108 may be of any suitable impact resistant material, but preferably is an injection molded ABS plastic. Chassis 108 as shown also includes a pivotable carry handle 109.

Within front enclosure 104 is an access vent 110 by which ambient air in drawn through an air filter 112 by an internal fan 92 into the interior of apparatus 20, and two side exhaust vents 114 by which cooling air circulating through the interior and waste gases from beds 30,32 are exhausted from apparatus 20.

The effectiveness and highly compact size and light weight of the invention is made possible in large part because of a novel manifold structure and interconnection of the components of the invention as will now be described.

According to the invention, operating components of unique design are all assembled in an integrated configuration as illustrated in FIGS. 7 through 13b. As shown, adsorber beds 30, 32 are mounted vertically between and in fluid communication with both feed/waste manifold 120 and a product manifold 122. Mounted to the sides of beds 30, 32 on feed/waste manifold 120 are feed valves 40, 42 and waste valves 44, 46, respectively. Below the valves and to provide fluid communication with both heads of double headed compressor 24 (to be described) are access fittings 124, 126 fixed to feed/waste manifold 120 and connecting the outlets of compressor 24 to deliver the ambient air from compressor 24 to manifold 120, where it is directed by internal channels to the respective feed valves 40, 42 to be alternately fed through manifold 120 to beds 30, 32. In the VPSA embodiment of the invention, one of the compressor heads is configured to provide vacuum to remove the waste gases from both heads. In this

embodiment, manifold 120 is configured to provide fluid connection from only the pressure side of compressor 24 to both beds through the feed valves 40, 42, whereas manifold 120 has a separate fluid connection to the vacuum side of compressor 24 through the waste valves 44, 46 to both heads.

Product gas is delivered from beds 30, 32 by fluid connection of bed outlets 30b, 32b to product manifold 122, in which channels are cut to deliver product gas through fitting 122a and by tubing (not shown) to the inlet side 62a of mixing tank 62. In the PSA embodiment of apparatus 20, a portion of the product gas is redirected by purge orifice 50 connected between fittings 50a and 50b and equalization valve 52 to the idle adsorber bed, whereas in the VPSA embodiment, the purge orifice is eliminated and virtually all of the product gas is delivered to mixing tank 62. Mixing tank 62 is mounted on product manifold 122 at its outlet side 62b, where it is in fluid connection through manifold 122 with delivery control assembly 60 also affixed to manifold 122 as shown.

The two beds 30, 32, the two manifolds 120, 122 and compressor 24 are then held together as a compact unit, as shown, by a single elongated bolt 130 passing through manifolds 120, 122, between beds 30, 32 and threaded to compressor 24. The unit as assembled is then attached to central chassis 108 by suitable shock absorbing means. As thus constructed, it is apparent that the mechanical components of apparatus 20 can now be readily assembled in production and readily accessed for servicing.

With reference to FIGS. 12, 13a, and 13b, a preferred compressor as used in the invention is the compact compressor 300 disclosed as a second embodiment of the invention disclosed in co-owned and co-pending U.S. non-provisional patent application No. 10/932,183, the entire disclosure of which is incorporated by reference herein. For the apparatus operating in the PSA mode, the compressor includes a single-shaft motor 302, a central housing 316, and two opposing pressure heads 304, 306. However, for operation in the VPSA mode, one head, e.g., 304 comprises the pressure-side compressor head, and head 306 the vacuum-side compressor head.

The motor 302 is a standard electric motor is securely mounted to the central housing 316 with the drive shaft 308 penetrating the central housing 316. Central housing 316 is configured to support both compressor heads 304, 306, each of which as disclosed in the above identified non-provisional application includes an inlet chamber with an inlet filter, an outlet chamber with

an outlet filter, a counterweight 309, a drive shaft support plate 314, and a drive shaft support bearing 315. Depending on the function and the gases to be moved, one of the compressor heads 304, 306 may have a longer stroke and therefore have a larger eccentric core. The counterweight 309 is configured to even out the weight distribution on the drive shaft 308 to thereby reduce vibration of the drive shaft 308. The drive shaft support plate 314 closes the central housing 316 and supports the drive shaft support bearing 315, which supports the free end of the drive shaft 308.

In the VPSA mode in which one compressor head supplies pressure and the other compressor head supplies a vacuum, the pressure-side compressor head 304 includes a pressure-side piston assembly 330 and a pressure-side chamber assembly 331. The pressure-side piston assembly 330 includes a pressure-side eccentric core 332, a bearing 336, a pressure-side piston 338, a piston seal 346, a pressure-side retaining plate 348, and a pressure-side intake flapper 350. The vacuum-side compressor head 306 includes a vacuum-side piston assembly and a vacuum-side chamber assembly. In this case, the vacuum-side eccentric core may have a different radius than the pressure-side eccentric core such that the vacuum-side piston assembly has a longer or shorter stroke than the pressure-side piston assembly 330. Further, the vacuum-side eccentric core 432 may have a different phase than the pressure-side eccentric core 332. For example, the vacuum-side eccentric core may be phased about 180° from the pressure-side eccentric core such that the vacuum-side piston assembly is at the top dead center position when the pressure-side piston assembly is also at the top dead center position.

Further details of the compressor and its operation in either or both PSA and VPSA modes will be clear from a reading of the co-pending non-provisional application.

In operation, ambient air is caused by fan 92 to enter the enclosed interior of apparatus 20 through inlet 110 on the front cover 104 and supporting a filter 112 of a gross-particulate foam, designed to remove dust and other impurities, from the air entering the apparatus interior. A portion of the ambient air which enters the interior of apparatus 20 is caused by the compressor 24 to flow into resonator 22 through a second filter made of felt material at intake 21 to further filter the air to be fractionated. The balance of the ambient air flowing into the interior of the apparatus 20 is caused by fan 92, baffle 132, and static flow directing vanes 134 to flow in a controlled path throughout the enclosed interior of the apparatus to cool the operating elements of apparatus 20 before exiting side exhaust vents 114.

A combined PSA/OCD based on the preferred embodiment is easily able to deliver an oxygen concentration, at standard atmosphere in excess of about 90% in pulse doses at every inhalation cycle of about 8.75 mL for the setting of 1 LPM, about 17.5 mL for the setting of 2 LPM, and about 26.25 mL for the setting of 3 LPM. Quite surprisingly, this performance can be achieved in an apparatus with a weight of less than about 5 lb., measuring overall less than 4" (or about 3.6") in depth, less than 7" (or about 6.6") in width and less than 9" (or about 8.6") in height, and emitting less than about 55 decibels in noise level.

In the embodiments shown, each of the adsorber beds 30, 32 for a medical application may have about a half liter capacity and be about 5.25 inches in length and about 1.375 inches in diameter, with the zeolite sieve material weighing about 50 grams for each adsorber bed. Preferably, the beds 30, 32 are spring biased in order not to "fluidize" the sieve material in their depressurization or pressure equalization stages. The feed stream of air is provided at a nominal rate of about 6 LPM, to produce a product gas within an approximate operating system pressure range from about 27.7 psia to about 39.7 psia, with the setting at 3 LPM and a user breathing rate of about fifteen breaths per minute.

The circuit components on a printed circuit board 81 control the PSA cycle and the pulse dosing of oxygen from the apparatus. A flexible wiring strip 88 connects the accessible operating switches 86 and indicators on control panel 84 to the circuit board 81.

Those PSA operating components may be as shown and configured to operate as described in U.S. Patent No 6,764,534. In an alternate embodiment as shown by FIG. 3, the operation may be as described in co-pending provisional application entitled Oxygen Conserving Device with Variable Pulse Times (Attorney Docket 3011174) and filed on or about even date herewith. In that embodiment, the apparatus as partially shown in FIG. 3 does not use a pressure regulator. As described in the above identified co-pending application, the desired volume of oxygen to be delivered on inhalation is determined by a sensing of the "volume" pressure by pressure transducer 84 at the mixing tank 62, which then when read by microprocessor 82 in conjunction with a reading of the operating cycle stage will access the look-up table for the selected flow setting and cause the flow control demand valve 74 to be opened for the time specified in the table.

Maximum breathing rates for the apparatus have been determined for the combination of each flow control switch setting and range of voltages that control the apparatus. Preferably, the

apparatus is designed to operate in three settings of 1, 2 and 3 liters per minute (LPM) with an overall PSA cycle time of 11 seconds.

The concentration of the oxygen supplied by the apparatus for each setting of flow control switches 86 is dependent on system pressure, operating voltage (battery or external supply), and patient breathing rate within allowable ranges of these parameters. As in the embodiment shown in U.S. Patent No 6,764,534, the microprocessor calculates, from continuous or sampled readings of the selector position, the operating voltage, and the frequency of actuation of the flow controller 80, the predictable oxygen concentration being delivered to the user. If any of these approach the upper or lower thresholds, for example as low as 85% oxygen concentration, an intermittent alarm may be provided to warn the user that he or she can continue to use the apparatus but should take action to prevent the performance from falling outside of specifications. If any of the parameters regularly exceeds the predetermined thresholds, for example at a calculated oxygen concentration of 80% or less, the alarm may be programmed to sound continuously to notify the user that the performance of apparatus 20 is outside of specifications and its use discontinued.

For example, although the apparatus has been designed to accommodate reasonable breathing rates, a very significant increase in the physical activity of a user and the resulting increased breathing rate could cause the apparatus to be overdrawn by a demand of oxygen from the apparatus 20 more than it can supply. The embodiment shown preferably includes an audible signal at startup of the apparatus, both audible and a red visual light alarms to signal high and low pressure, system overdraw, and an apnea event (i.e., the absence of inhalation within a preset time), audible and yellow visual light alarms to signal a low battery condition, and a pulsing green light to indicate normal apparatus operation in a pulse mode.

The flow controller 80 continuously monitors the battery voltage, flow control switch setting, and the patient's breathing rate. If the breathing rate causes the apparatus to approach an overdraw condition (an oxygen concentration of about 85%) or to reach overdraw (a concentration of about 80% or less), the alarm either warns or alerts the patient to moderate his or her physical activity.

As in the embodiment shown in U.S. Patent No 6,764,534, the apparatus 20 may be powered by internal battery 98 or an external power supply that also can charge the internal battery . Also, the operating cycle may be controlled to function in the sequence and for the

times disclosed as in U.S. Patent No 6,764,534 or other times suitable to the desired product gas output selections. Similarly, the circuitry, alarms and indicators may function in like manner. For example, in the embodiment described above and as shown in U.S. Patent No 6,764,534, the microprocessor monitors battery voltage, system pressure and flow rate; additional embodiments may include an oxygen monitoring system with the use of a blood oxygen sensor connectable to the user to measure the actual rather than the calculated concentration of oxygen being delivered to the user. In addition, those skilled in the art may be able to include other known safety features for use in monitored and/or unmonitored medical purposes.

It will be understood that various modifications and substitutions may be made to the described embodiment without departing from the spirit of the invention. Accordingly, the described preferred embodiment is intended for purposes of illustration and not as a limitation.

What is claimed is:

1. A compact and portable oxygen delivery apparatus for medical uses by producing from ambient air a product gas having a high concentration of oxygen and delivering the product gas to a user of the apparatus, the apparatus comprising means for receiving the product gas, at least two adsorber beds, each having an inlet at one end and an outlet at another end, a first manifold on which the beds are mounted at their inlet ends, a second manifold on which the beds are mounted at their outlet ends, means for detachably retaining the two beds and the manifolds together as an operating unit, means for drawing ambient air into the apparatus, means for discharging waste gases from the apparatus, means within the first manifold for providing fluid connection of the bed inlets with the drawing means and the discharging means, means within the second manifold for providing fluid connection of the bed outlets with the product gas receiving means; and means for delivering the product gas to the user at selectable times.

2. The apparatus according to claim 1, in which the drawing means comprises a compressor to supply the ambient air under pressure to each of the adsorber beds, and the compressor is detachably mounted on the first manifold as part of the operating unit.

3. The apparatus according to claim 1, in which the product gas receiving means comprises a mixing tank detachably mounted on the second manifold as part of the operating unit.

4. The apparatus according to claim 1, in which the product gas delivering means comprises a valve actuated by inhalation by the user and detachably mounted on the second manifold as part of the operating unit.

5. The apparatus according to claim 4, and further comprising at least one inlet valve in fluid connection between the ambient air drawing means and one of the bed inlets to control the flow of ambient air into the adsorber bed, the inlet valve detachably mounted on the first manifold as part of the operating unit.

6. The apparatus according to claim 4, and further comprising at least one waste valve in fluid connection between the discharging means and one of the bed inlets to control the flow of waste gases from the adsorber bed, the waste valve detachably mounted on the first manifold as part of the operating unit.

Abstract

A compact and highly portable combination pressure swing adsorption apparatus and product gas conservation device for medical use, to produce efficiently a gas with a high concentration of oxygen and to deliver the oxygen concentrated gas to a user at selectable times and in selectable doses, in which the operating components are detachably mounted together as a single unit.

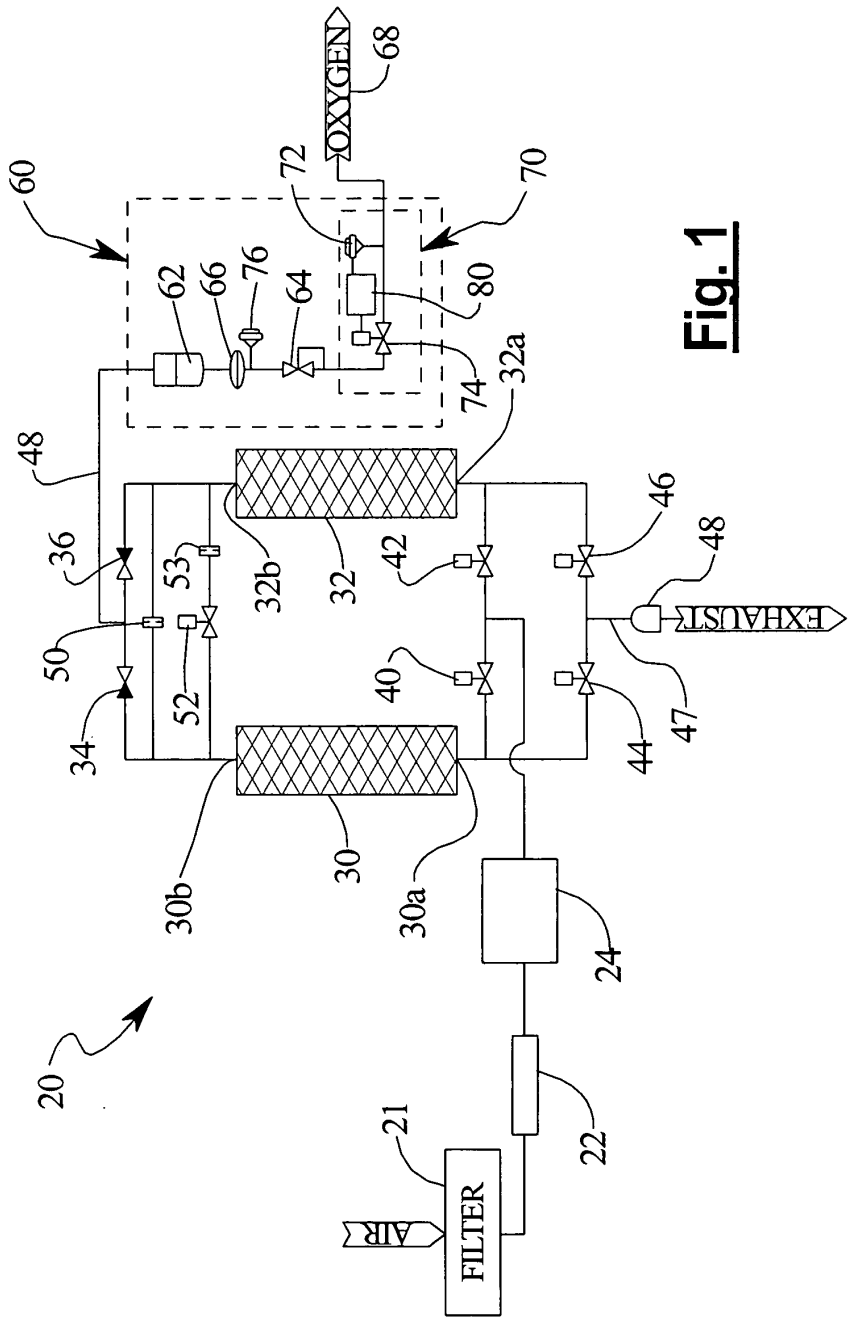
OXYGEN
68
60
72
70
62
66
76
64
80
74
32a
48
36
53
32b
32
42
46
48
50
52
40
EXHAUST
34
44
47
30b
30
30a
24
20
21
22
AIR
FILTER

Fig. 1

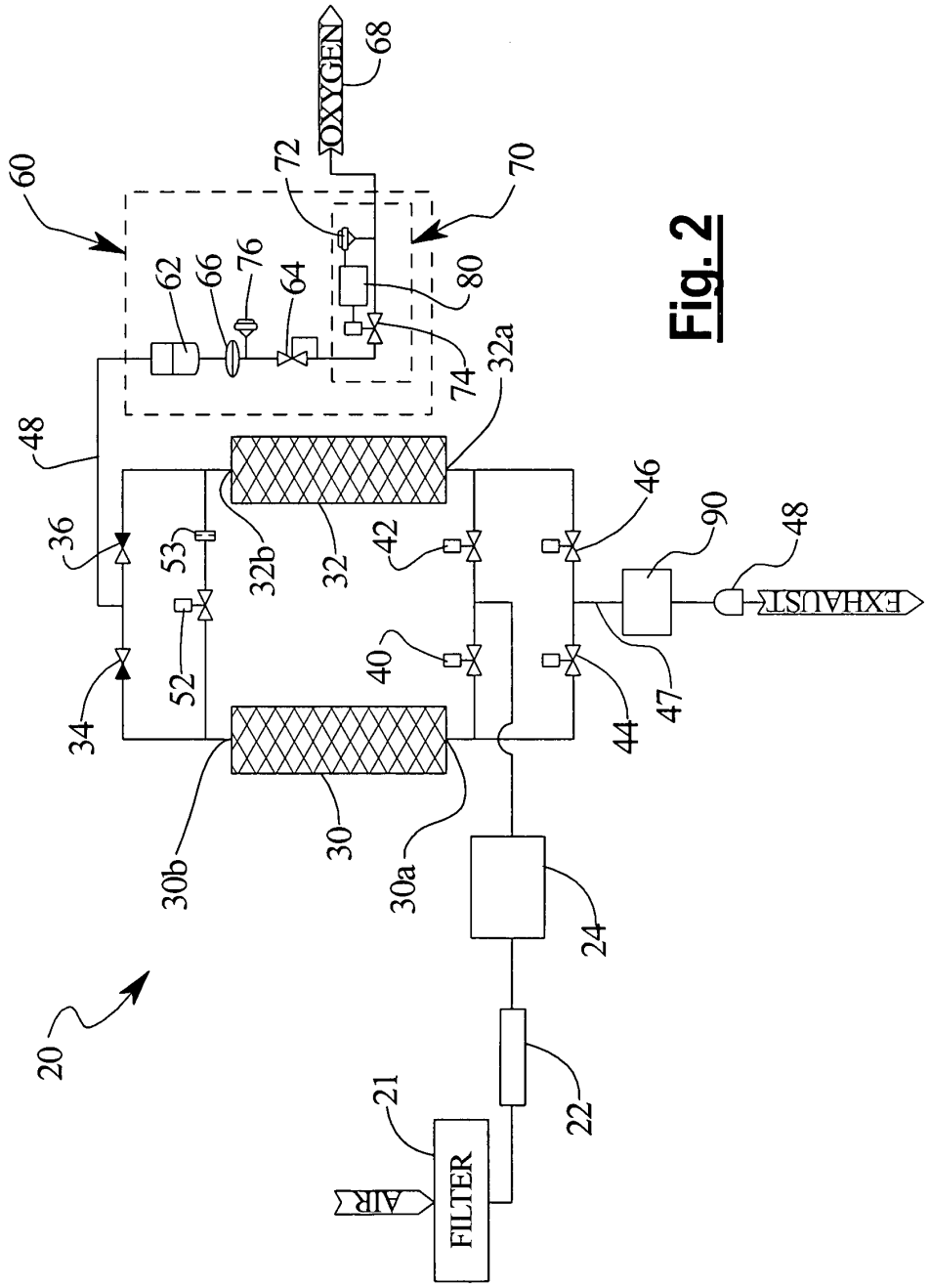
OXYGEN
68
60
72
70
62
66
76
64
80
74
32a
48
36
53
32b
32
42
46
90
48
EXHAUST
52
40
34
44
47
30b
30
30a
24
20
21
22
FILTER
AIR

Fig. 2

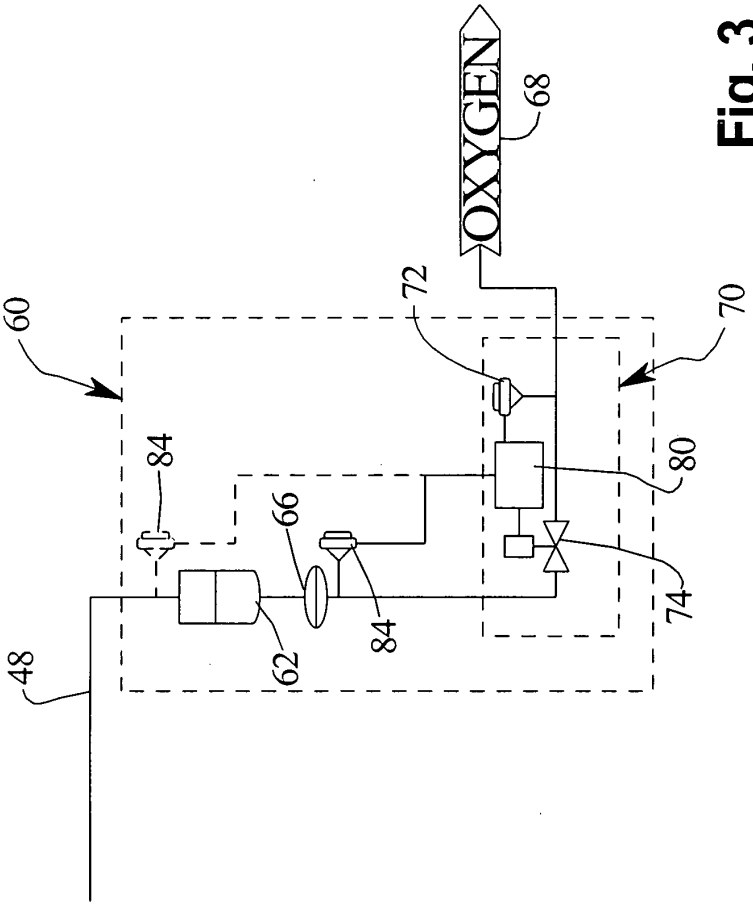

Fig. 3

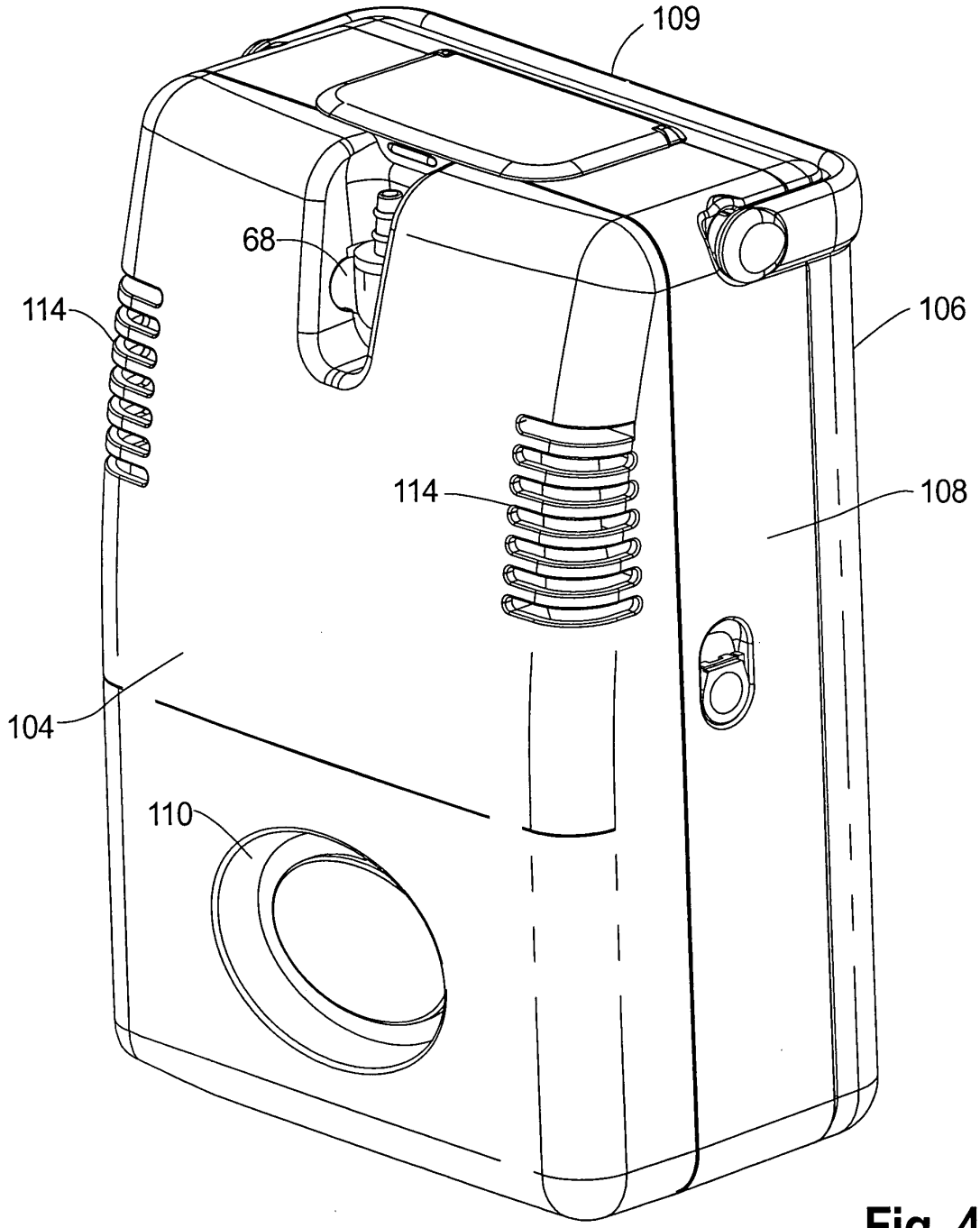

Fig. 4

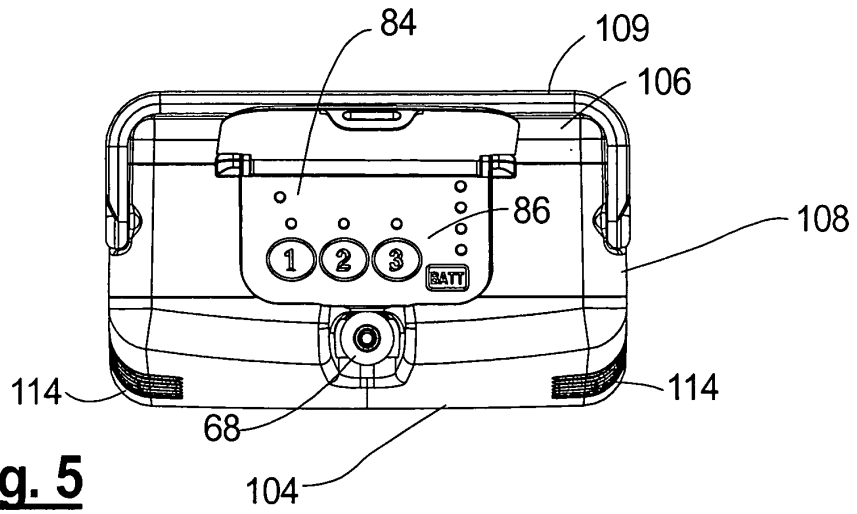

Fig. 5

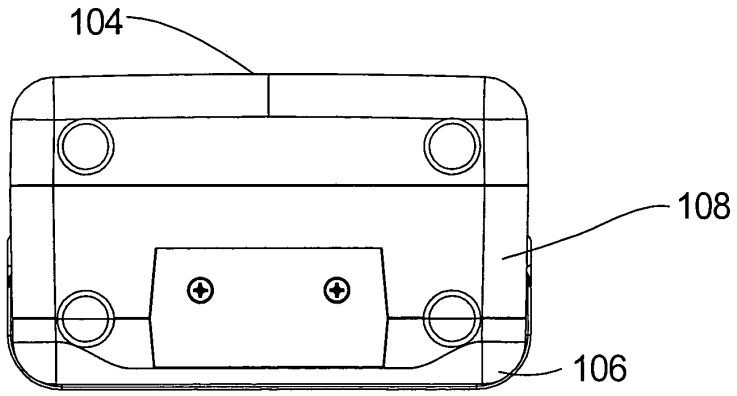

Fig. 6

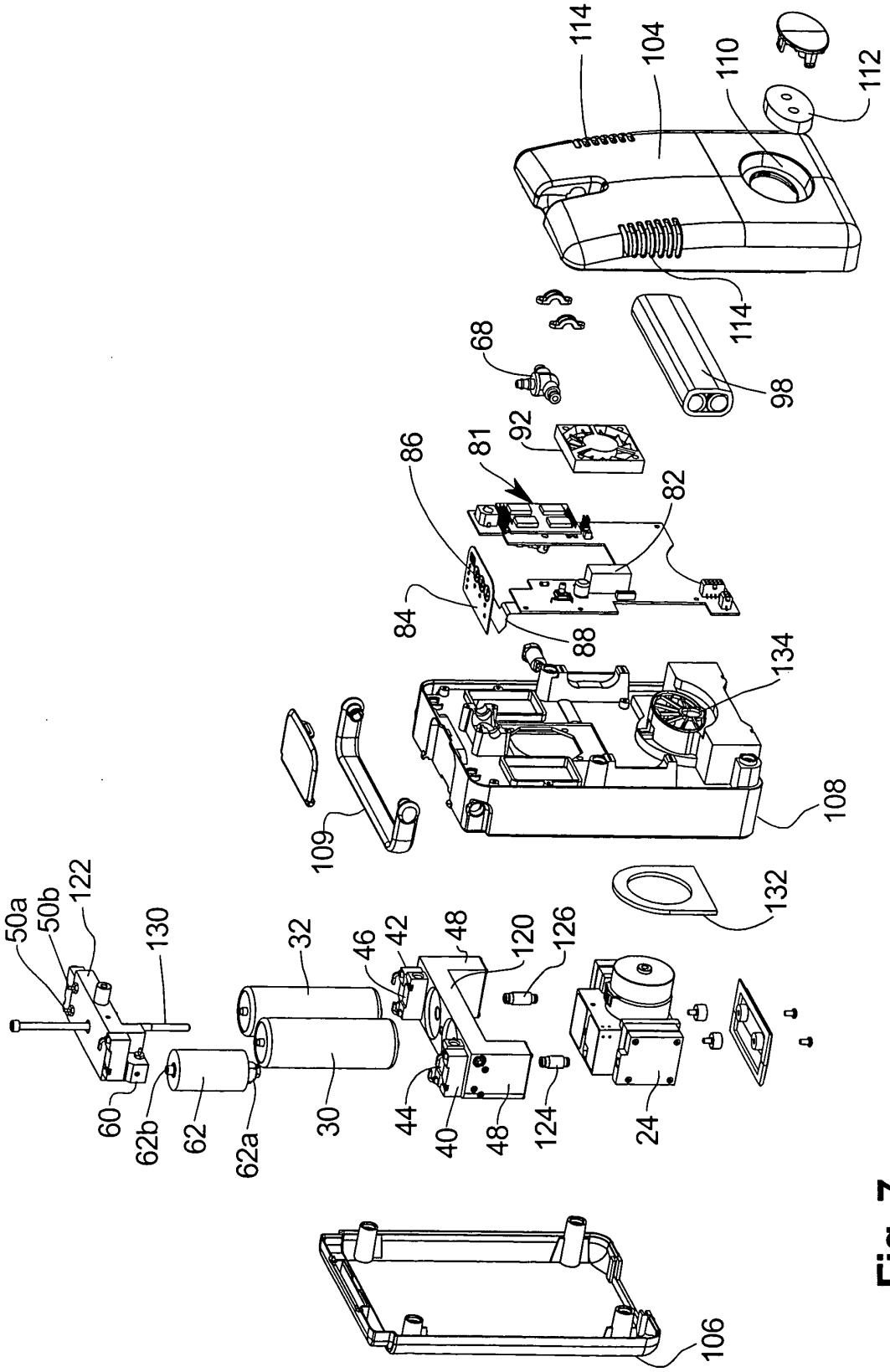
114
104
110
112
114
98
68
92
81
86
82
84
88
134
108
109
132
50a
50b
122
130
32
46
42
48
120
126
60
62b
62
62a
30
44
40
48
124
24
106

Fig. 7

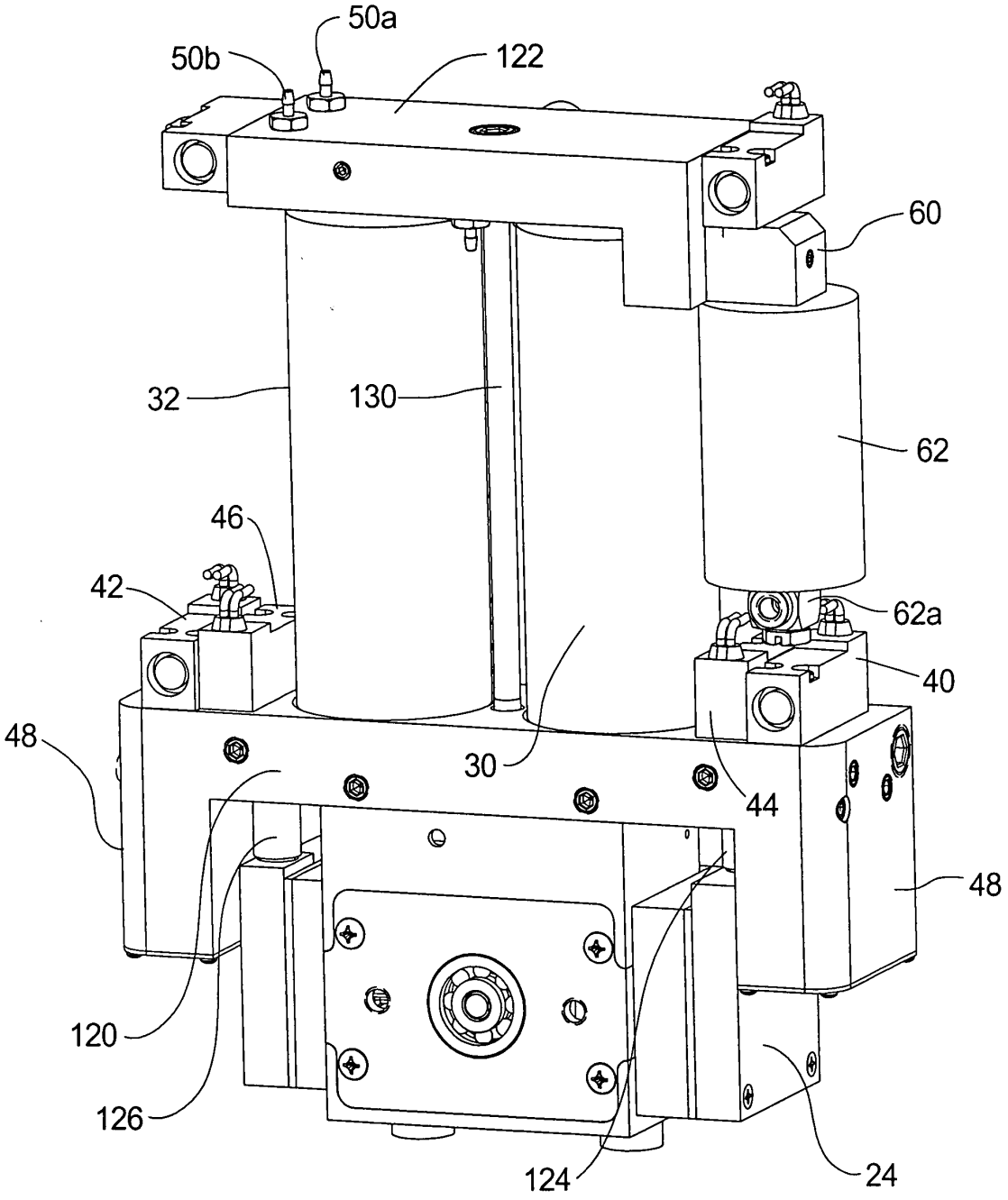

Fig. 8

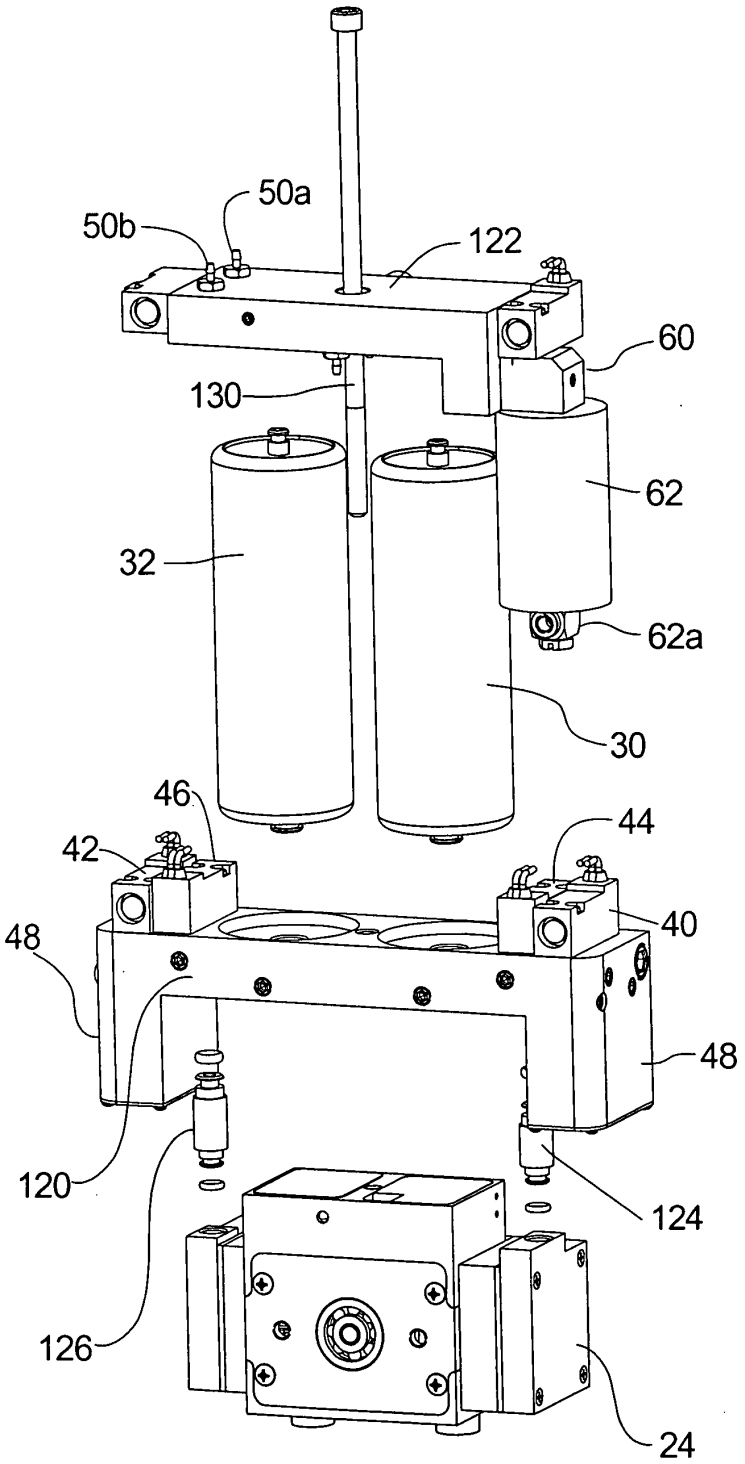

Fig. 9

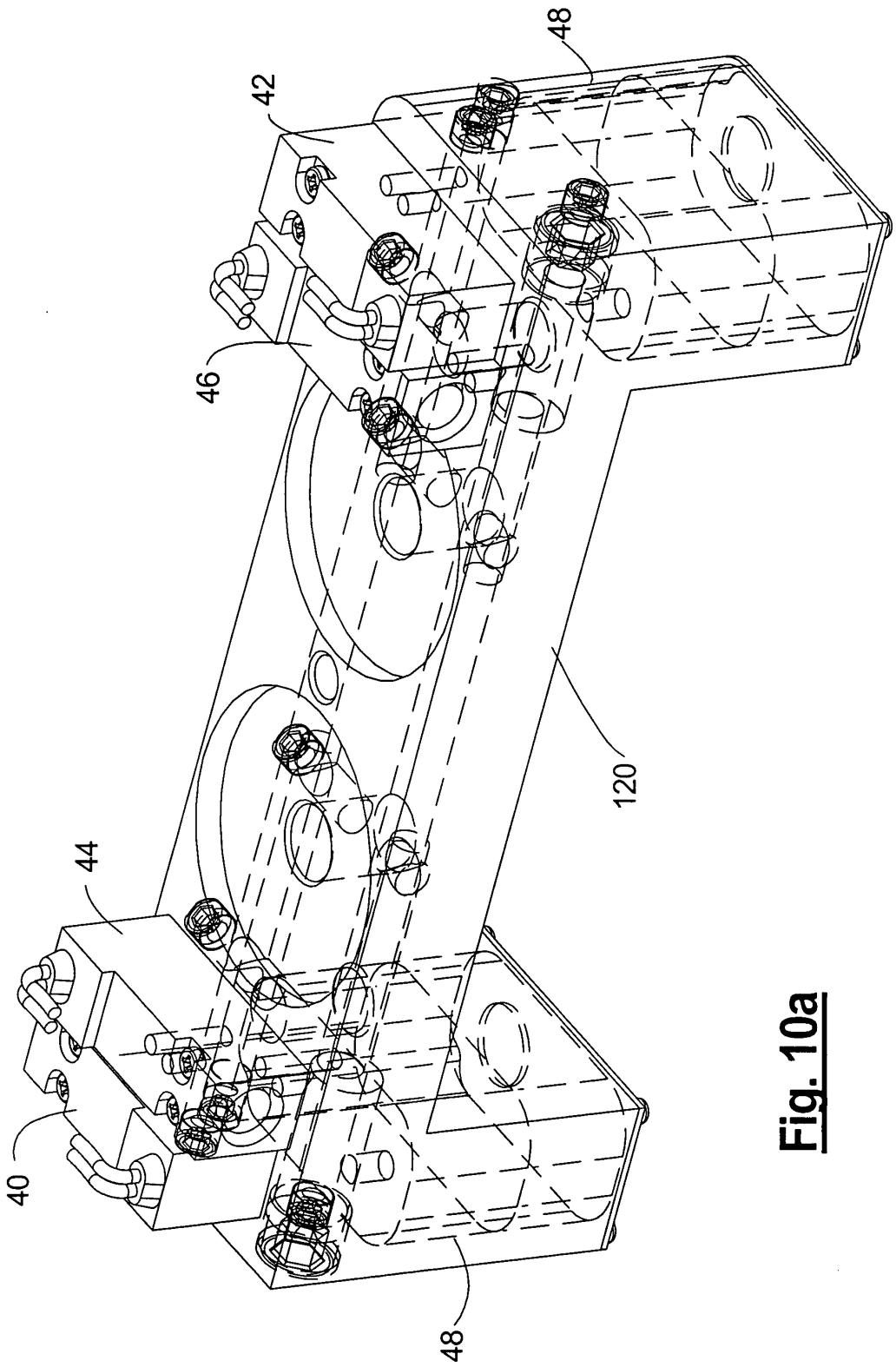

Fig. 10a

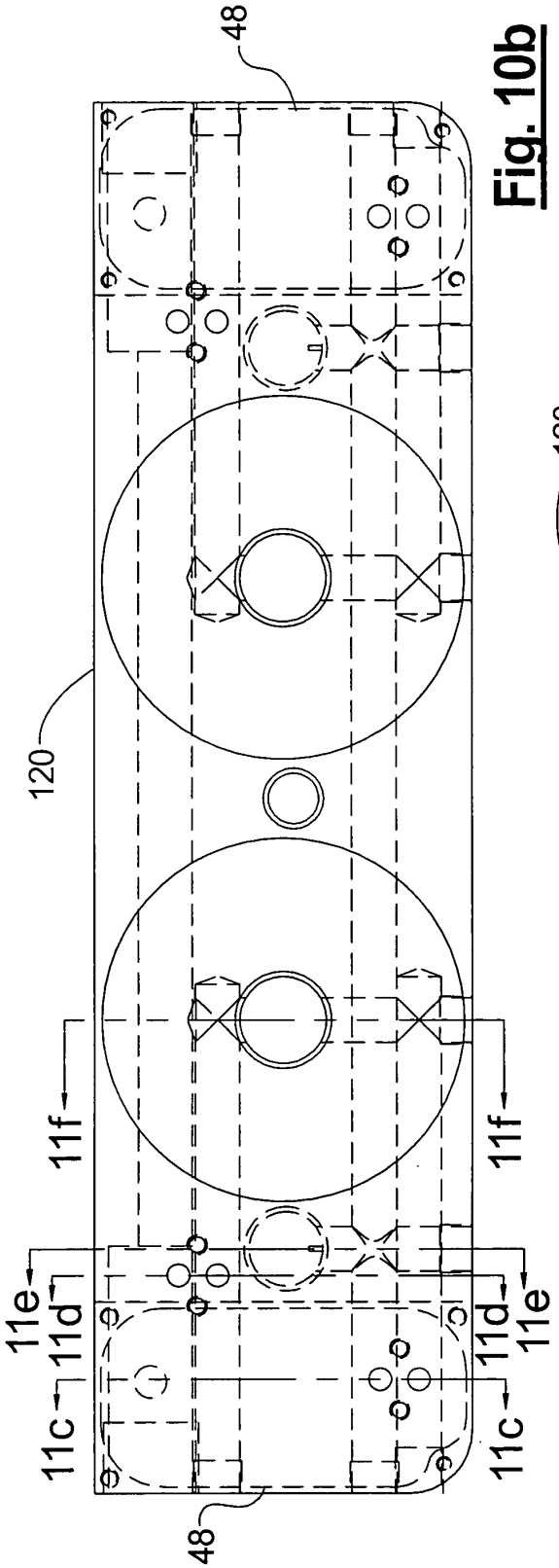

Fig. 10b

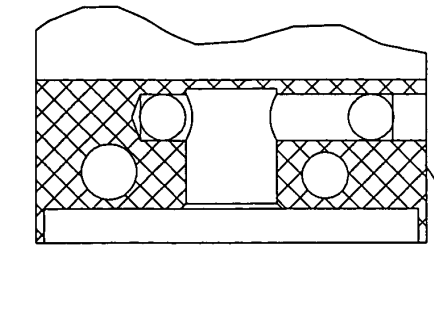

Fig. 10f

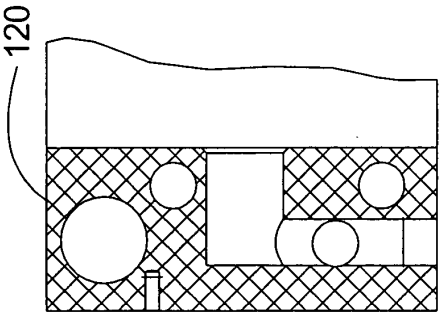

Fig. 10e

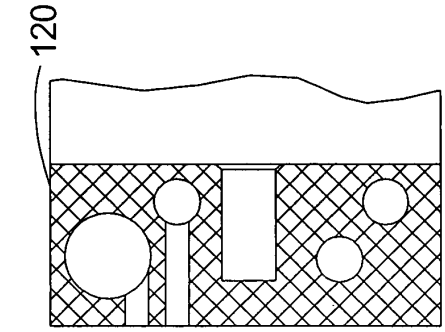

Fig. 10d

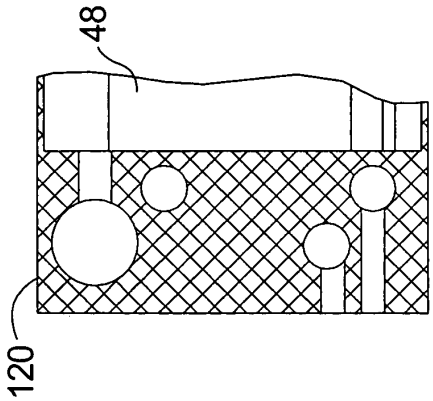

Fig. 10c

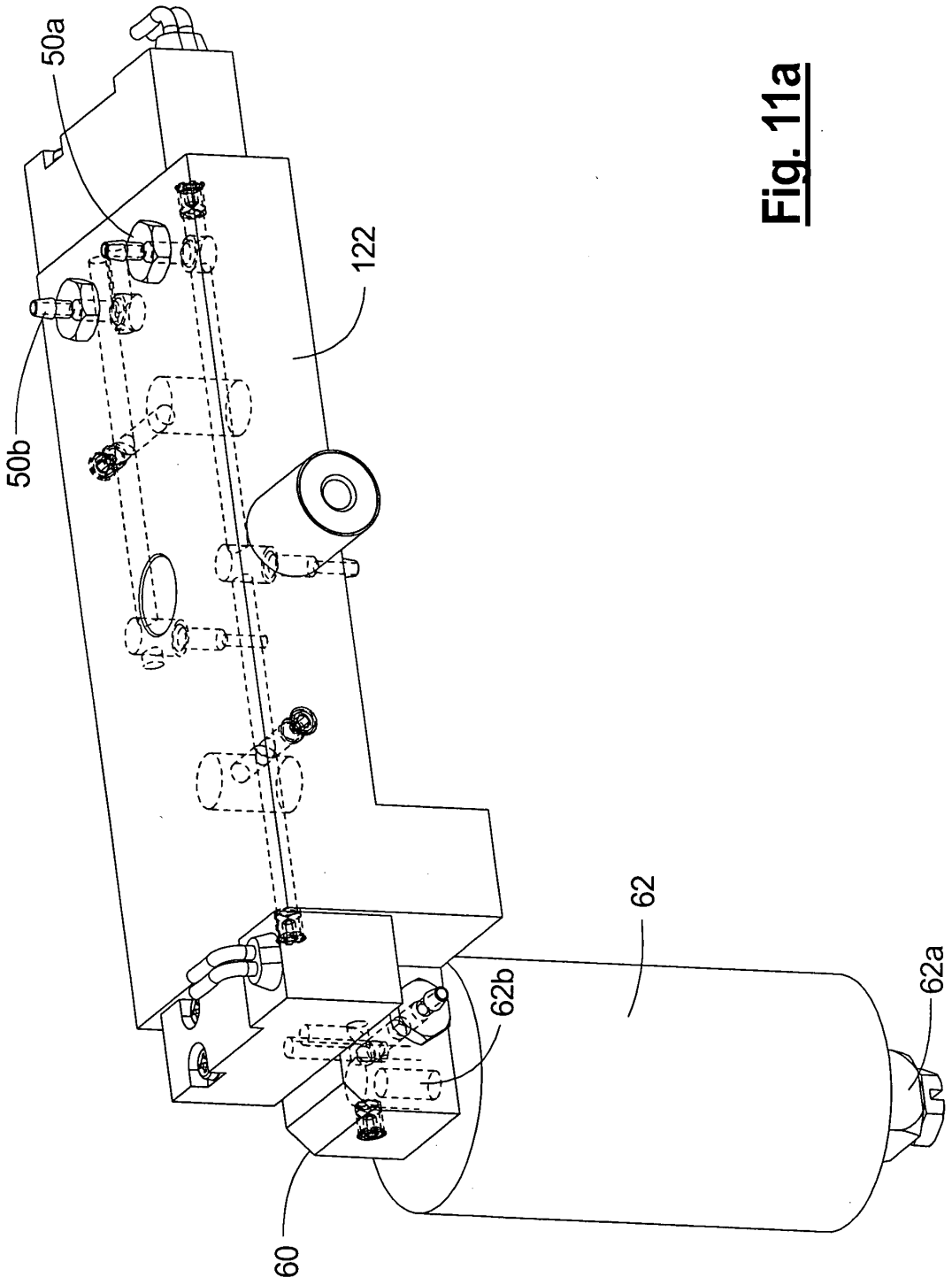

Fig. 11a

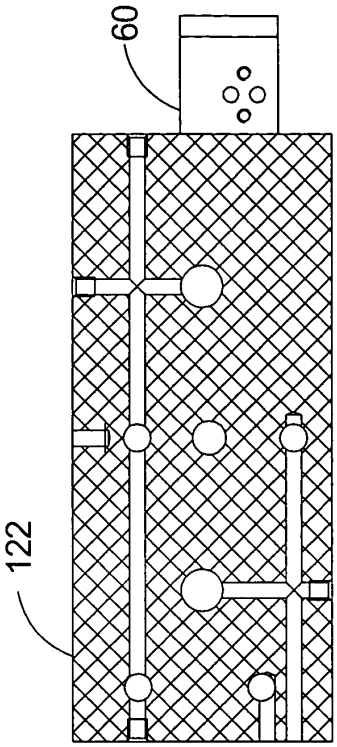

Fig. 11d

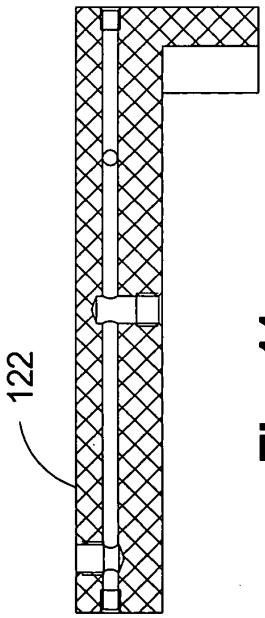

Fig. 11c

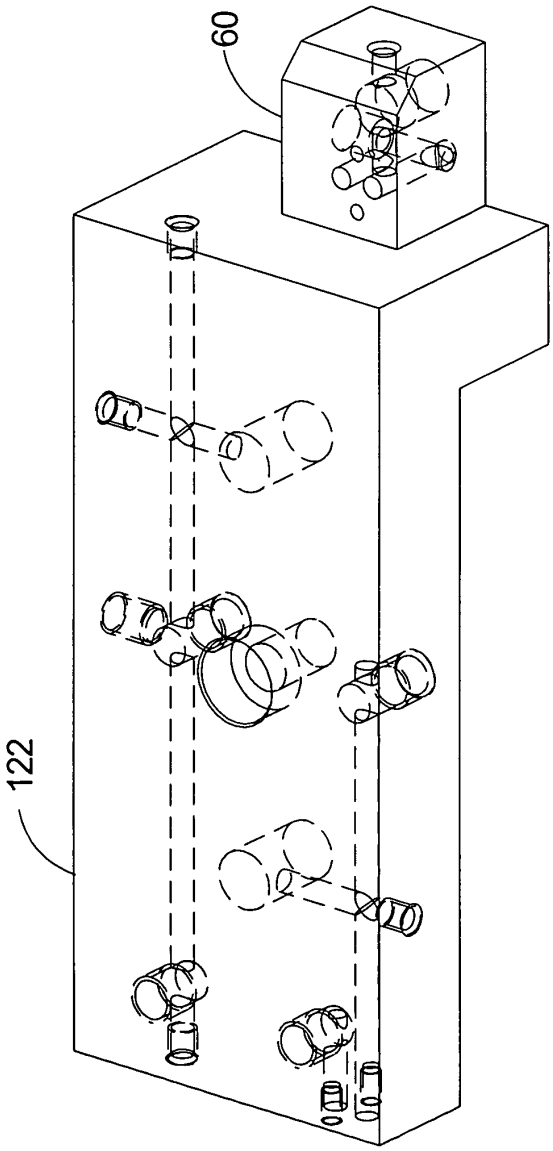

Fig. 11b

PATENT APPLICATION SERIAL NO. _____

U.S. DEPARTMENT OF COMMERCE
PATENT AND TRADEMARK OFFICE
FEE RECORD SHEET

10/15/2004 NNGUYEN1 00000050 503010 60617834
01 FC:2005 80.00 DA

PTO-1556
(5/87)

*U.S. Government Printing Office: 2002 — 489-267/69033