US 20060283325A1

(19) United States

(12) Patent Application Publication

(10) Pub. No.: US 2006/0283325 A1

(43) Pub. Date: Dec. 21, 2006

Sugano

(54) OXYGEN CONCENTRATING APPARATUS AND ROTARY VALVE

(76) Inventor: **Masato Sugano**, Tokyo (JP)

Correspondence Address:
RADER FISHMAN & GRAUER PLLC
LION BUILDING
1233 20TH STREET N.W., SUITE 501
WASHINGTON, DC 20036 (US)

(21) Appl. No.: **10/568,886**

(22) PCT Filed: **Sep. 9, 2004**

(86) PCT No.: **PCT/JP04/13494**

(30) **Foreign Application Priority Data**

Sep. 9, 2003 (JP) ..... 2003-316702
Sep. 10, 2003 (JP) ..... 2003-318005

**Publication Classification**

(51) **Int. Cl.**
*B01D 53/02* (2006.01)

(52) **U.S. Cl.** ..... **96/121**

(57) **ABSTRACT**

According the present invention, an oxygen enriched gas is generated by adsorbing and removing nitrogen gas from air with an oxygen concentrating apparatus which conducts the steps of (1) pressurizing one of the adsorption cylinders by directing the compressed air; (2) removing the oxygen enriched gas from said one of the adsorption cylinders to the output conduit; (3) reducing the pressure in said one of the adsorption cylinders by directing the oxygen enriched gas into one of the other adsorption cylinders to increase the pressure in the one of the other adsorption cylinders; (4) evacuating the internal gas out of said one of the adsorption cylinders; and (5) increasing the pressure in said one of the adsorption cylinders by directing the oxygen enriched gas into said one of the adsorption cylinders from one of the other adsorption cylinders in which the pressure is decreased in step (3).

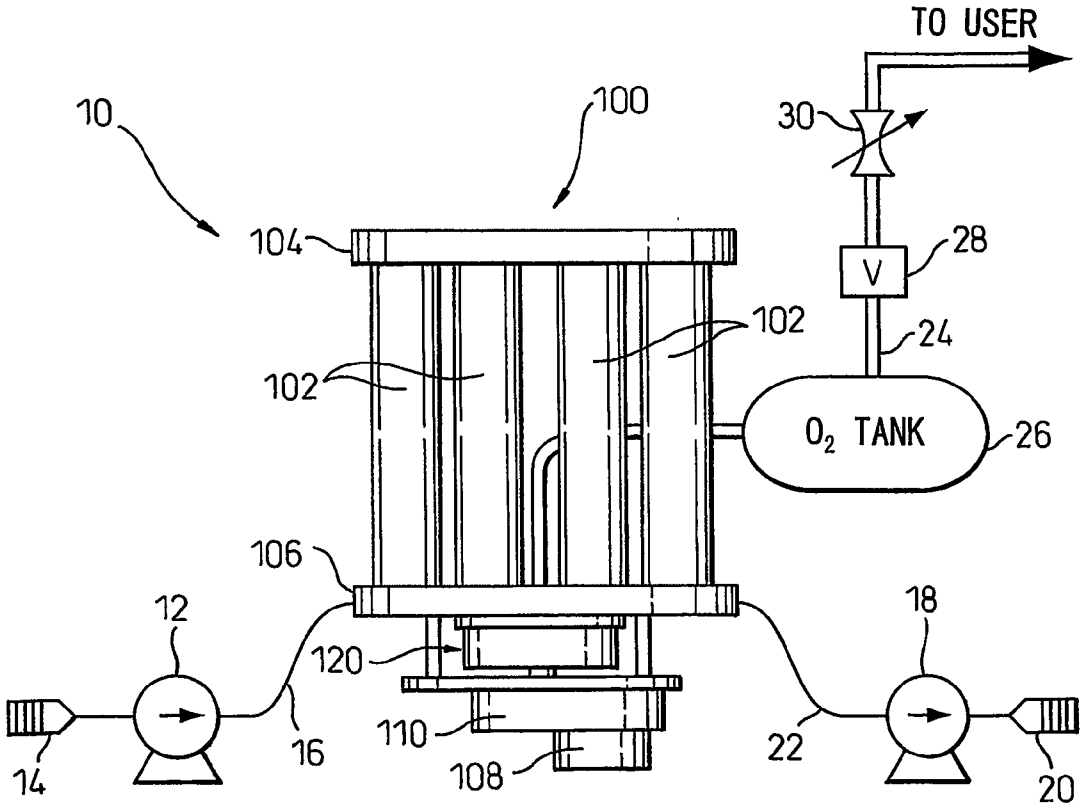

Fig.1

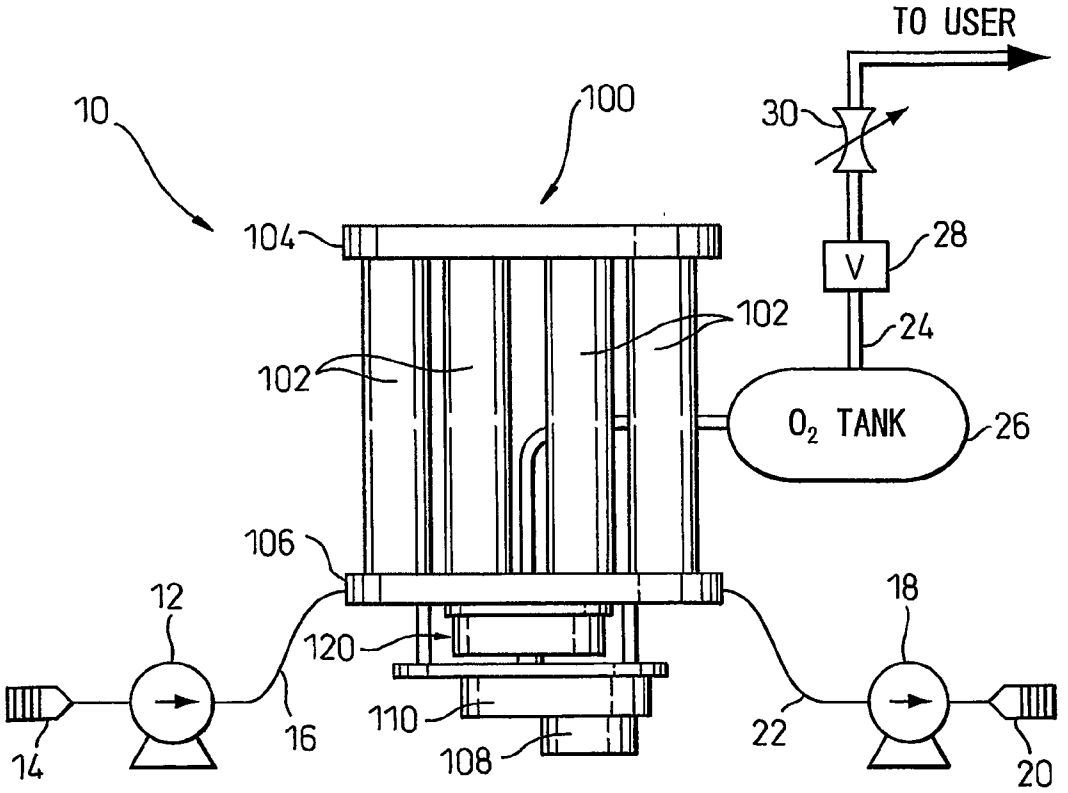
TO USER
10
100
30
104
28
V
102
24
102
$O_2$ TANK
26
106
12
18
120
110
16
22
14
108
20

Fig.2

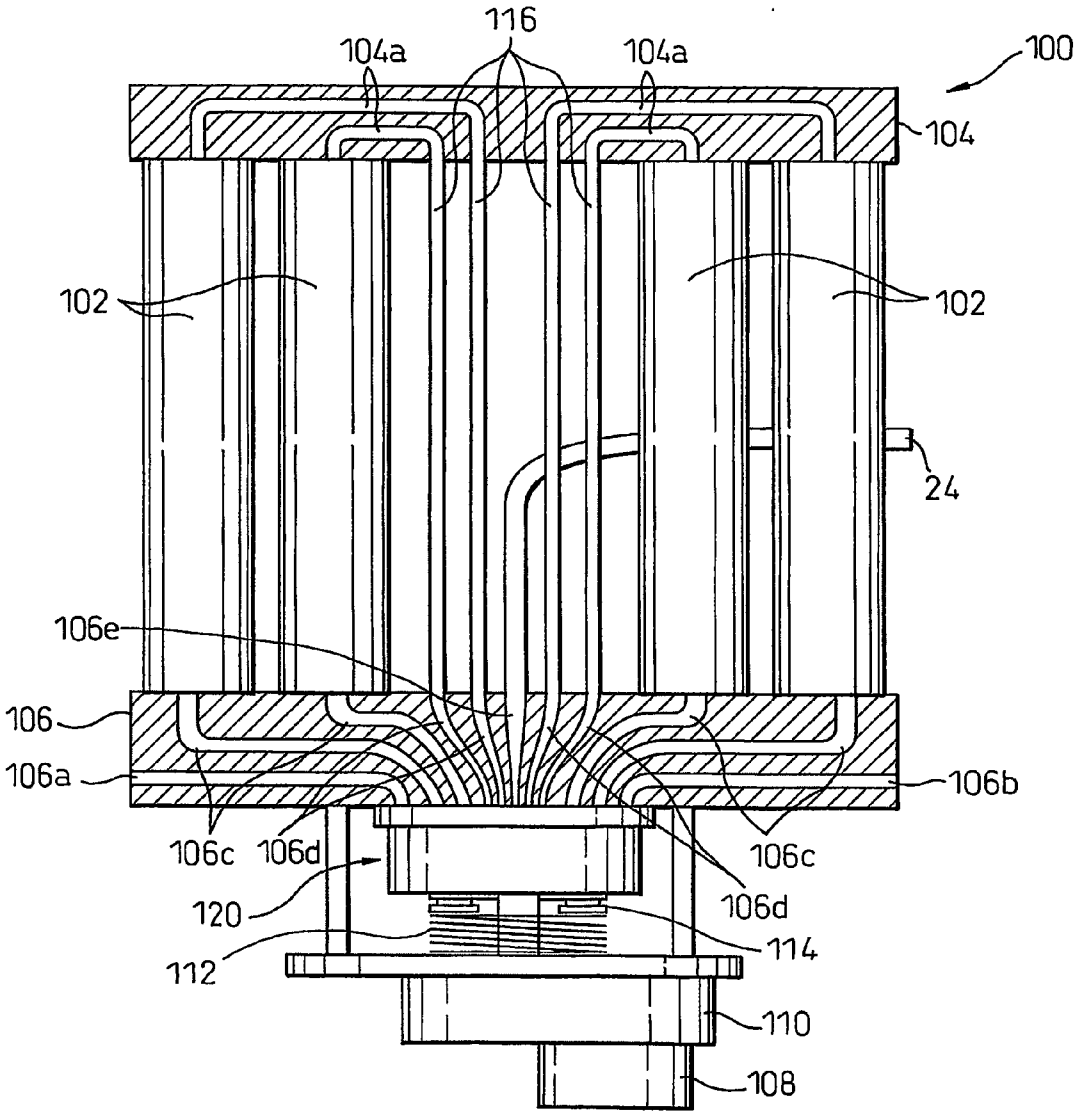
116
104a
104a
100
104
102
102
24
106e
106
106a
106b
106c
106d
106c
106d
120
112
114
110
108

Fig.3

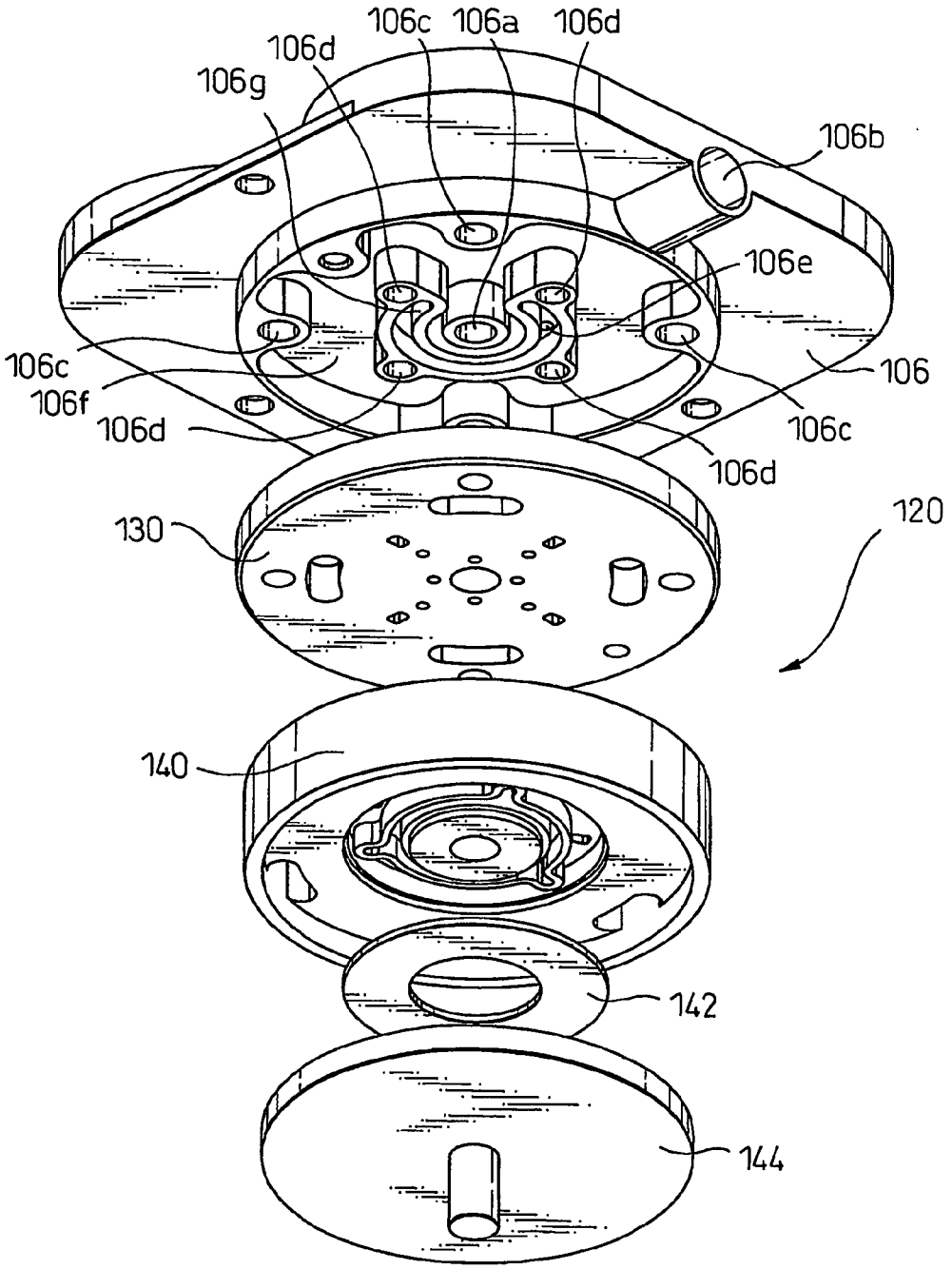
106c
106a
106d
106d
106g
106b
106e
106c
106f
106d
106
106c
106d
130
120
140
142
144

Fig. 4

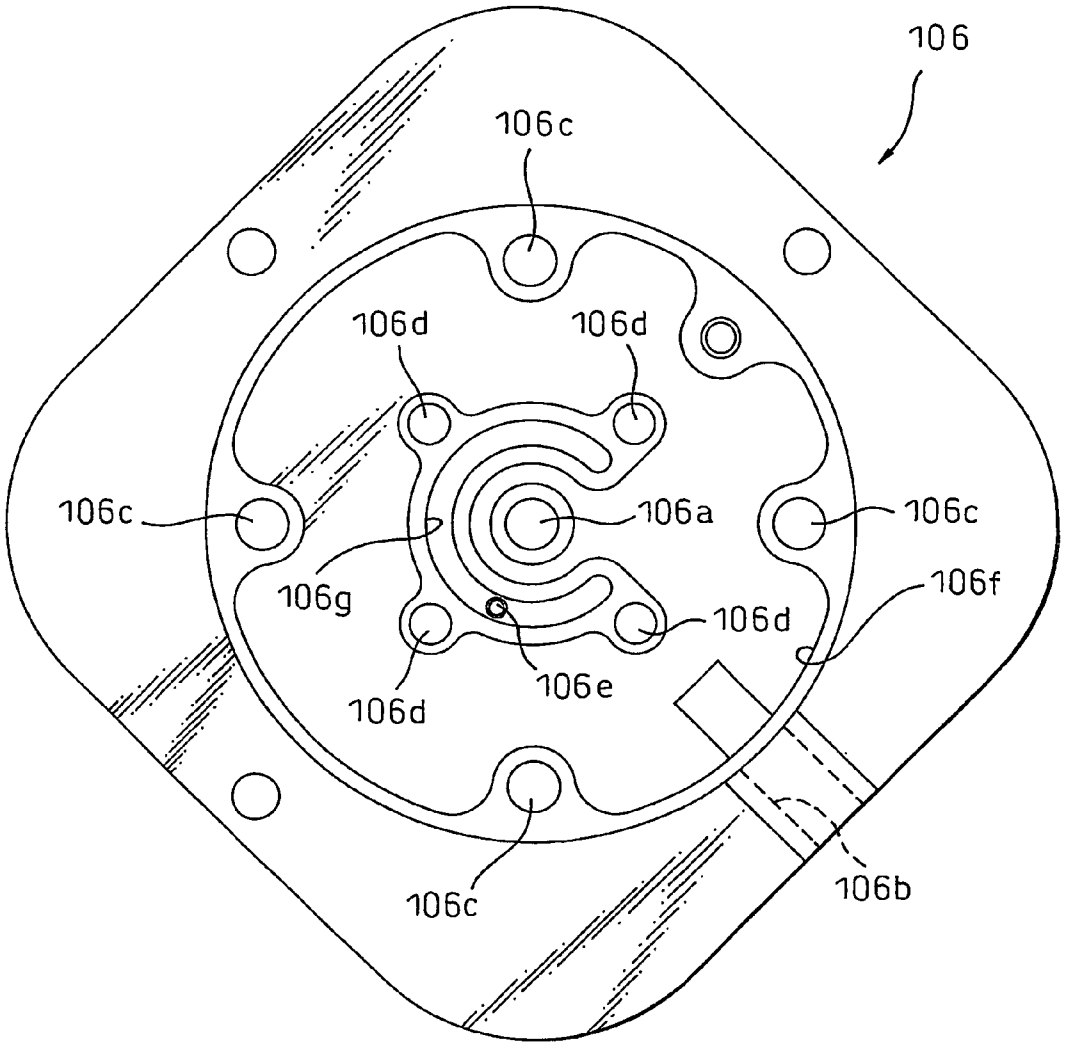
106
106c
106d
106d
106c
106a
106c
106g
106f
106d
106e
106d
106c
106b

Fig. 5

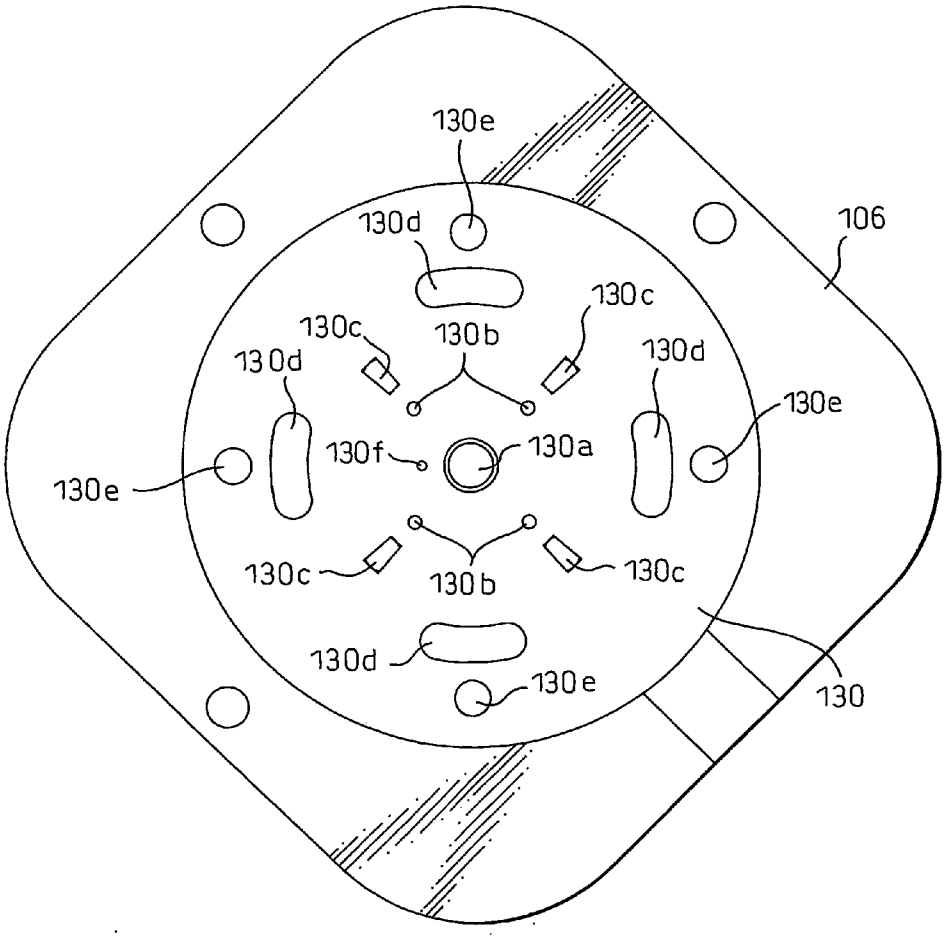
130e
130d
106
130c
130c
130b
130d
130d
130e
130f
130a
130e
130c
130b
130c
130d
130e
130

Fig. 6

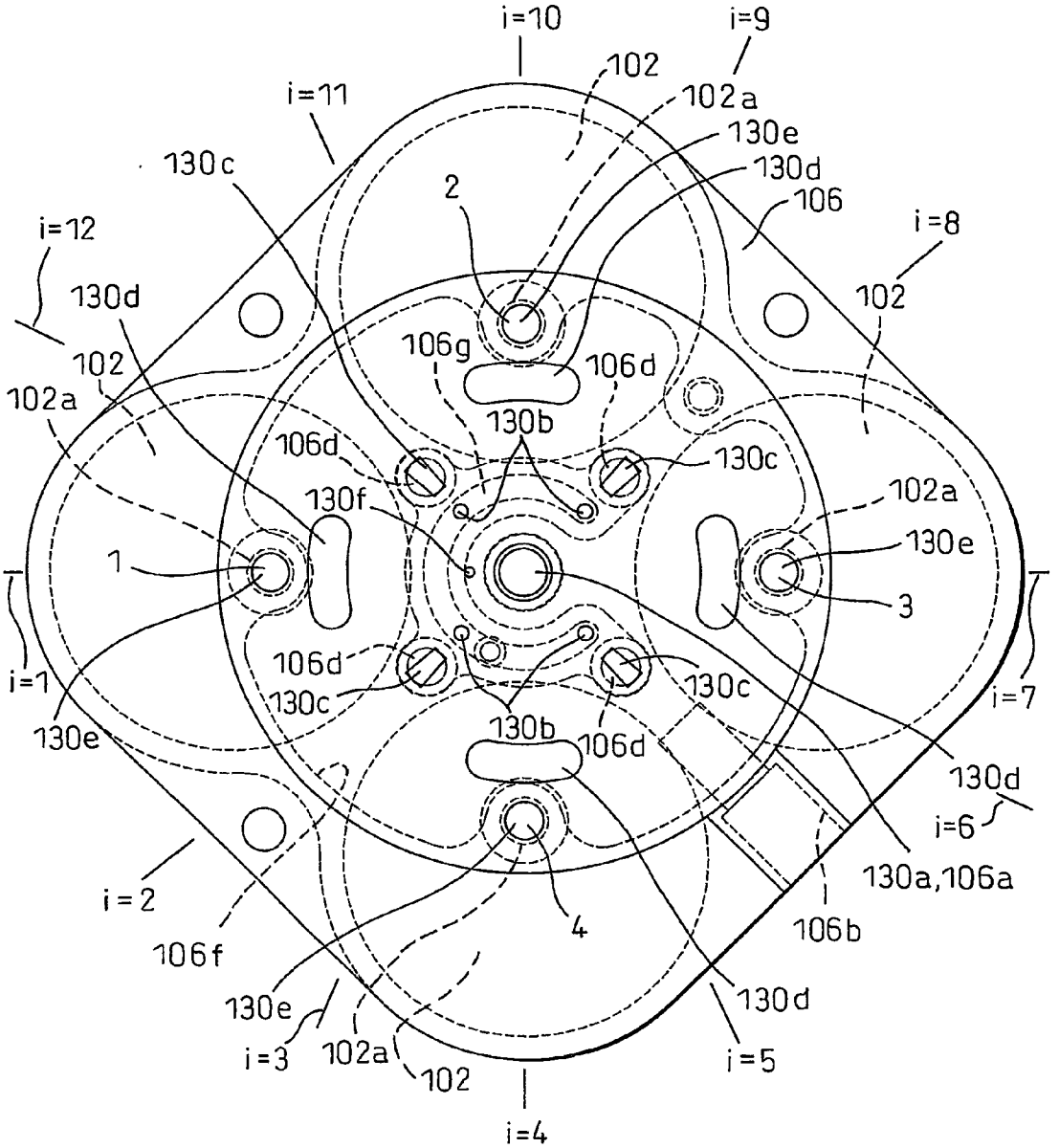
i=10
i=9
102
102a
i=11
130e
130c
130d
106
2
i=12
i=8
130d
102
106g
106d
102
102a
130b
106d
130c
130f
102a
130e
1
3
106d
i=1
130c
130c
i=7
130e
130b
106d
130d
i=6
130a,106a
i=2
4
106b
106f
130e
130d
i=3
102a
102
i=5
i=4

Fig. 7

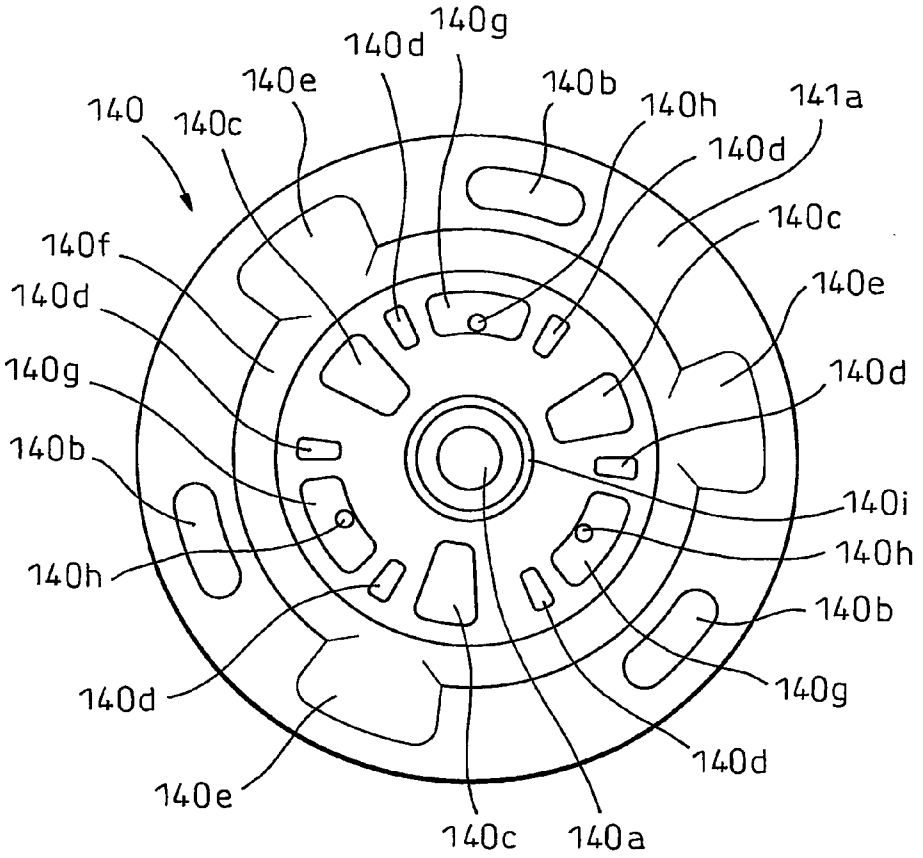
140
140c
140e
140d
140g
140b
140h
141a
140d
140c
140e
140d
140i
140h
140b
140g
140d
140a
140c
140e
140d
140h
140b
140g
140d
140f

Fig. 8

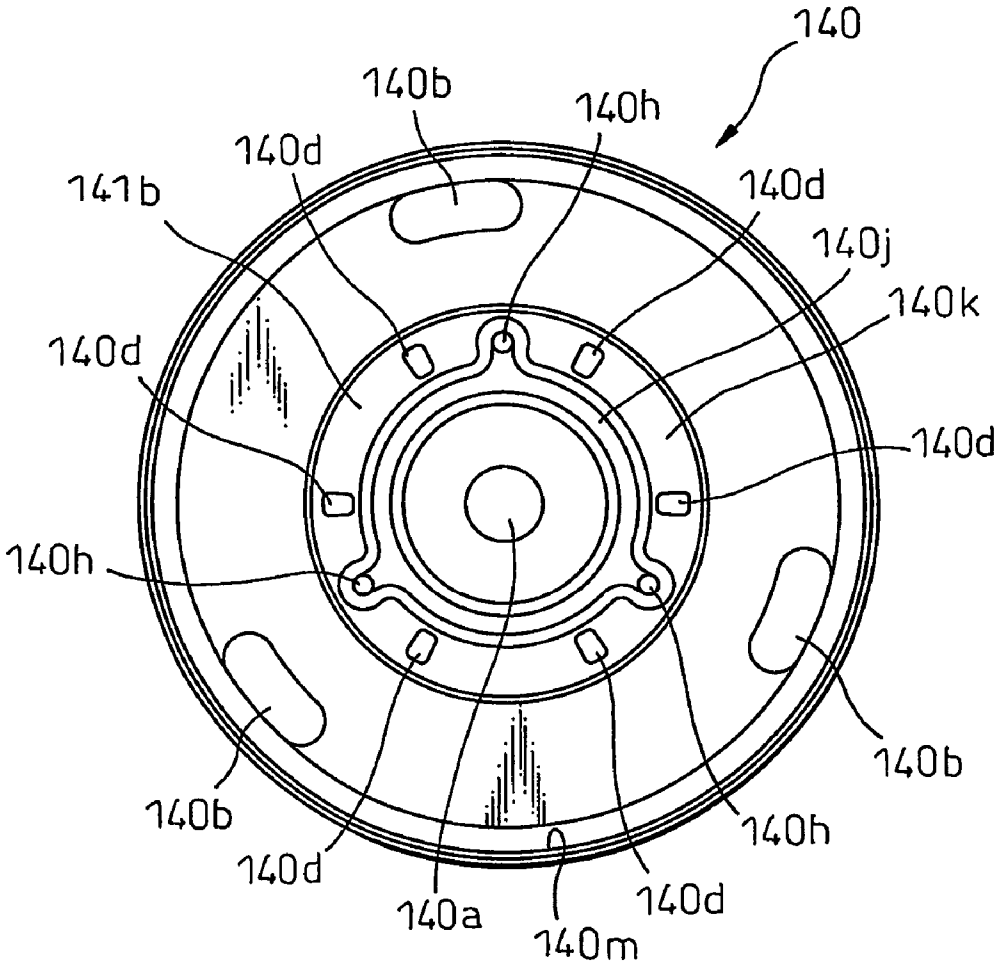
140
140b
140h
140d
141b
140d
140j
140k
140d
140d
140h
140b
140b
140h
140d
140a
140d
140m

Fig.9

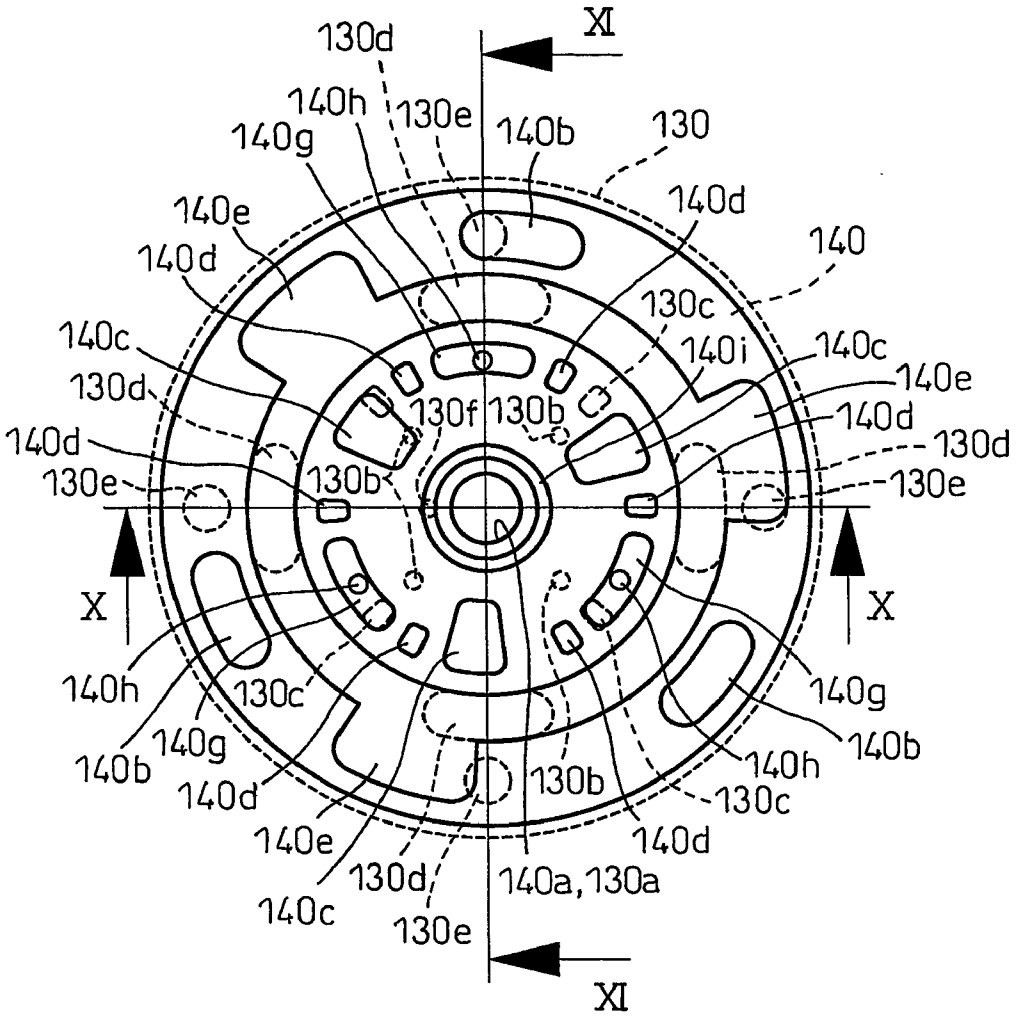
XI
130d
140h
130e
140g
140b
130
140d
140e
140d
140
130c
140c
140i
140c
130d
140e
130f
130b
140d
140d
130d
130e
130b
130e
X
X
140h
130c
140g
140b
140g
140b
140d
130b
140h
130c
140e
140d
130d
140a,130a
140c
130e
XI

Fig.10

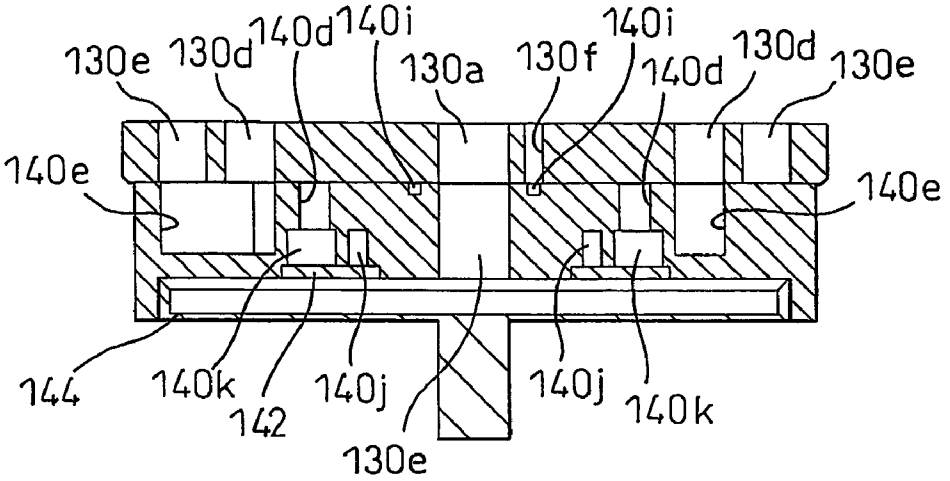
130e
130d
140d
140i
130a
130f
140i
140d
130d
130e
140e
140e
144
140k
142
140j
130e
140j
140k

Fig.11

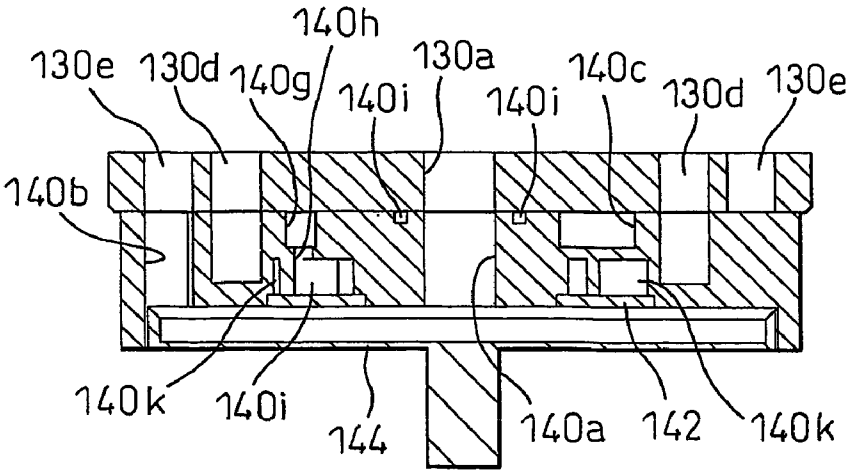
140h
130e
130d
140g
140i
130a
140i
140c
130d
130e
140b
140k
140i
144
140a
142
140k

Fig.12

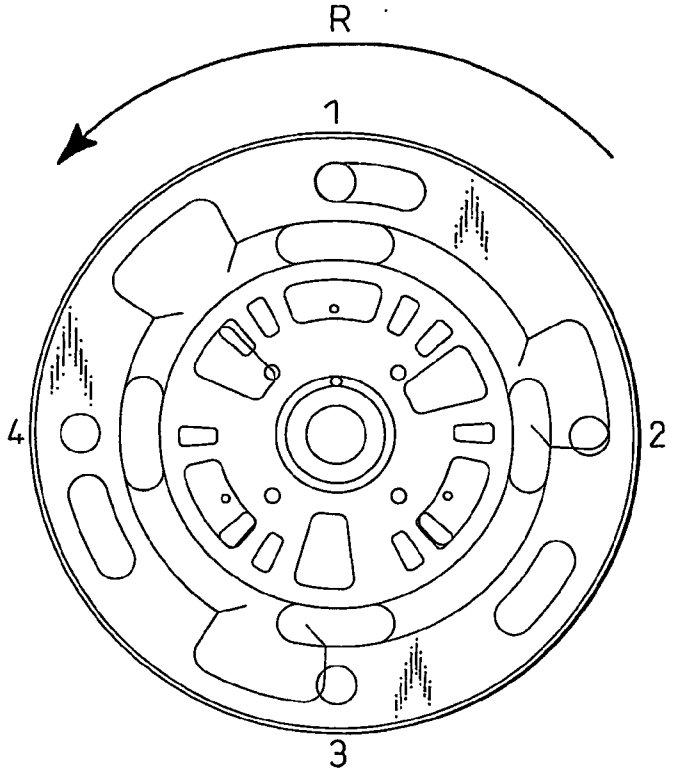


Fig.13

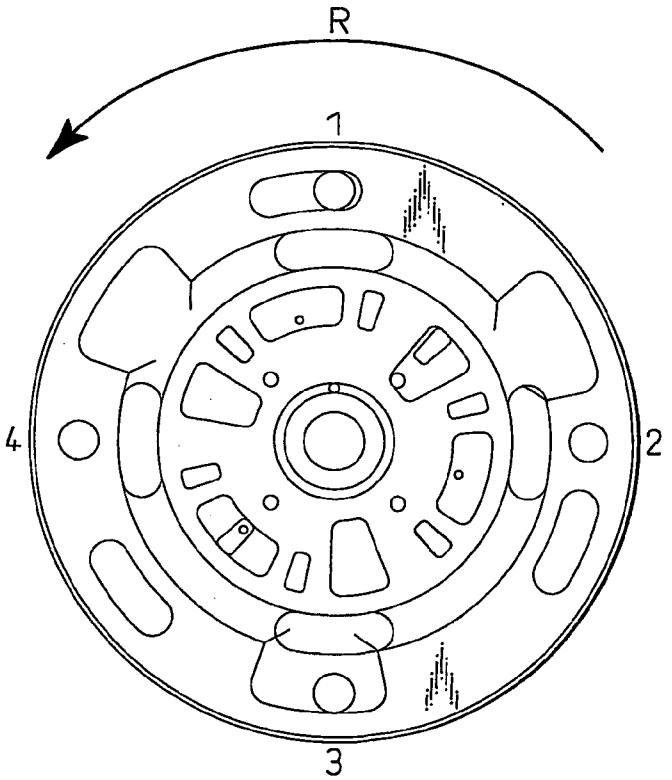

Fig.14

| | 0° | 15° | 30° | 45° | 60° | 75° | 90° | 105° | 120° |
|---|---|---|---|---|---|---|---|---|---|
| CYLINDER 1 | I | II | III | IV | V | VI | VII | VIII | |
| CYLINDER 2 | VII | VIII | I | II | III | IV | V | VI | |
| CYLINDER 3 | V | VI | VII | VIII | I | II | III | IV | |
| CYLINDER 4 | III | IV | V | VI | VII | VIII | I | II | |

Fig.15

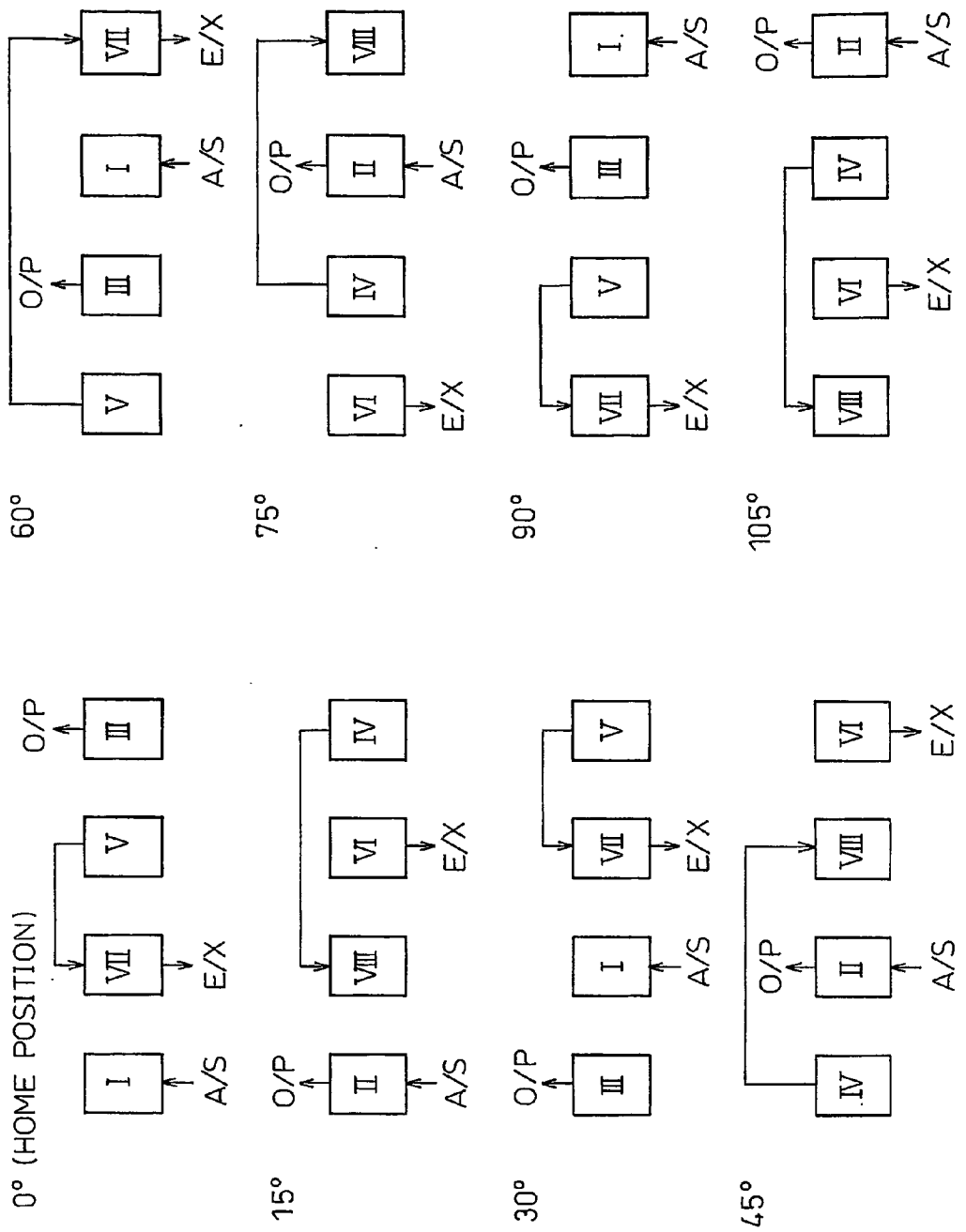
0° (HOME POSITION)
15°
30°
45°
60°
75°
90°
105°
I
II
III
IV
V
VI
VII
VIII
A/S
E/X
O/P

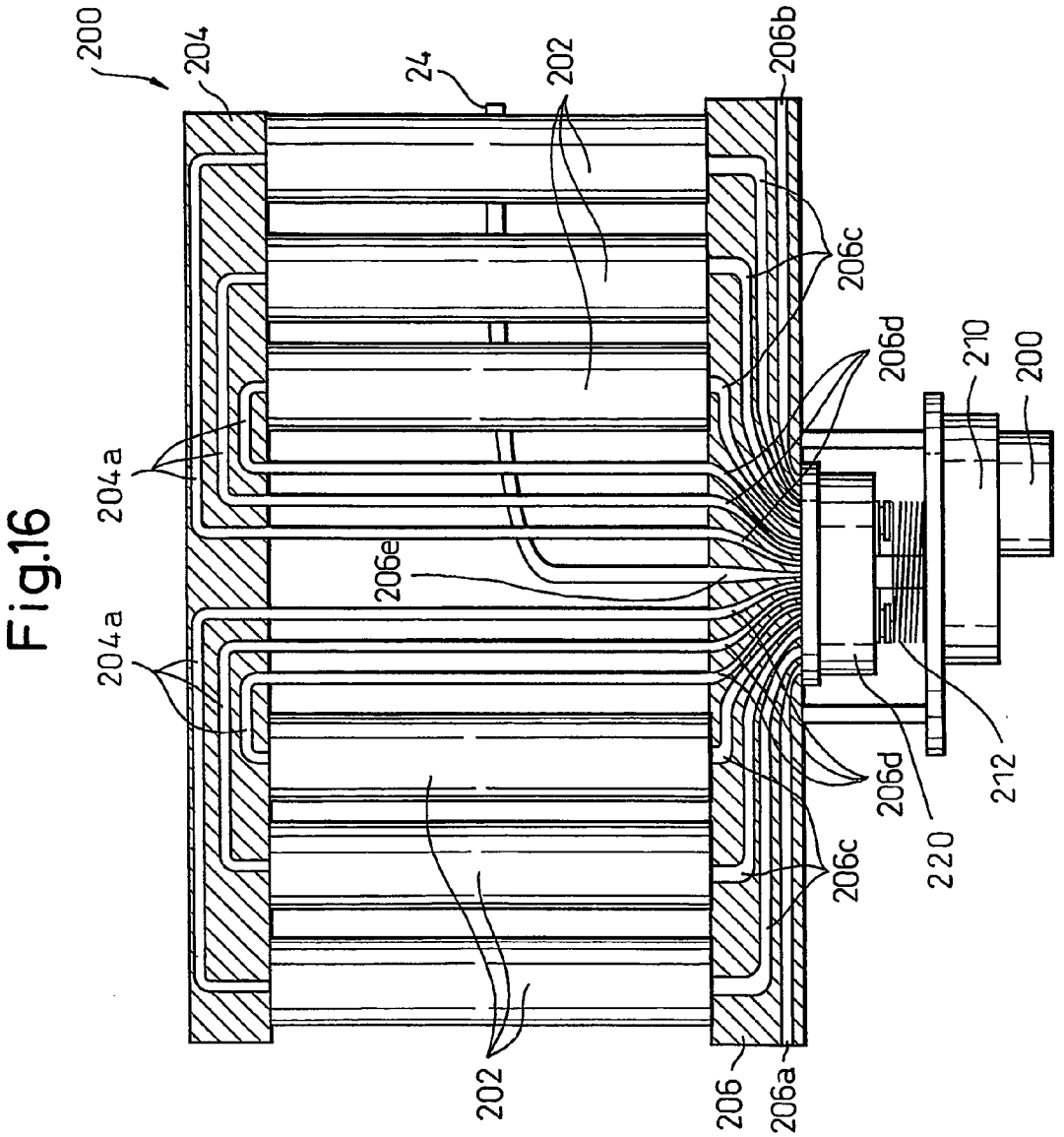
200
204
24
202
206b
206c
206d
210
200
204a
206e
204a
212
206d
220
206c
202
206
206a

Fig.16

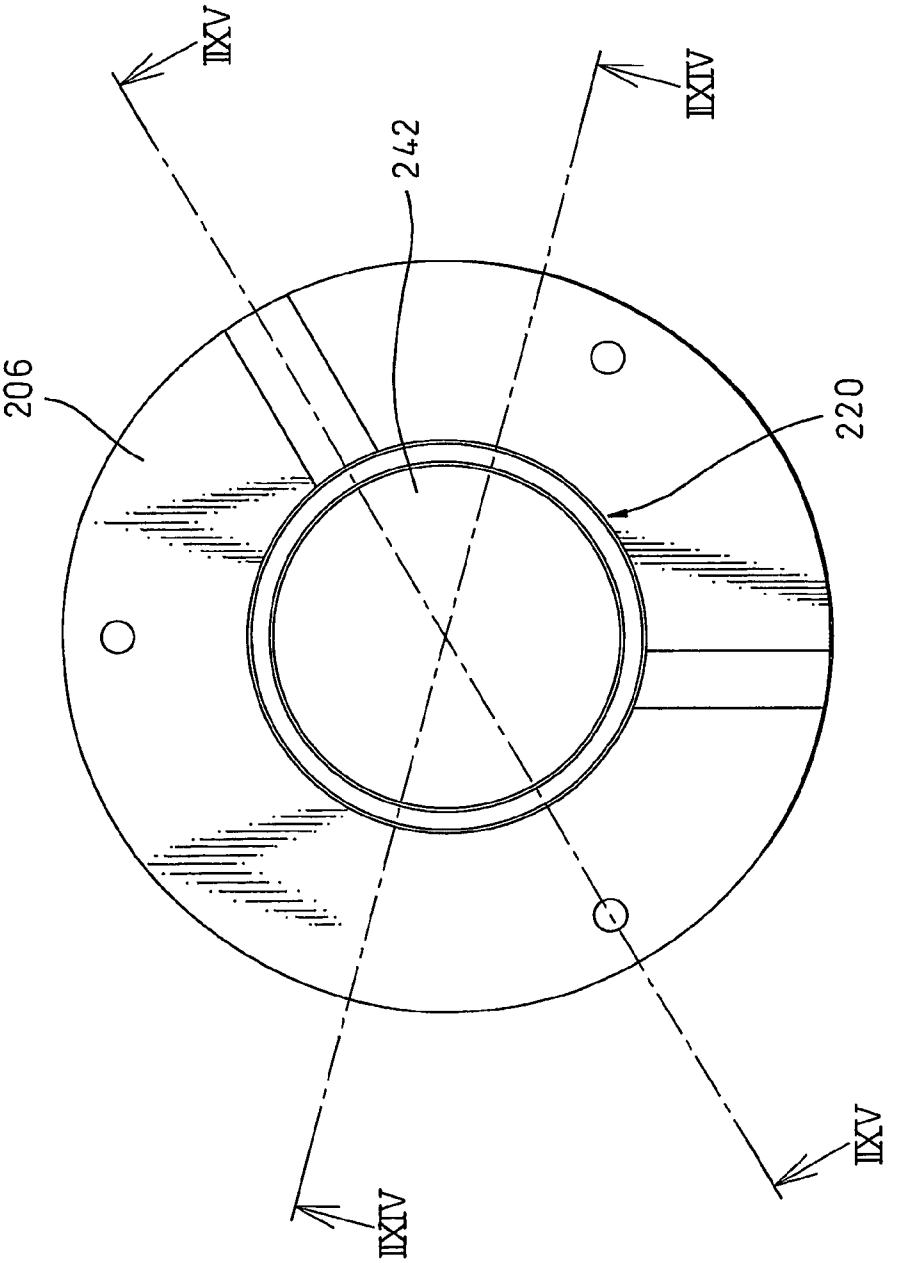


Fig.17

Fig.18

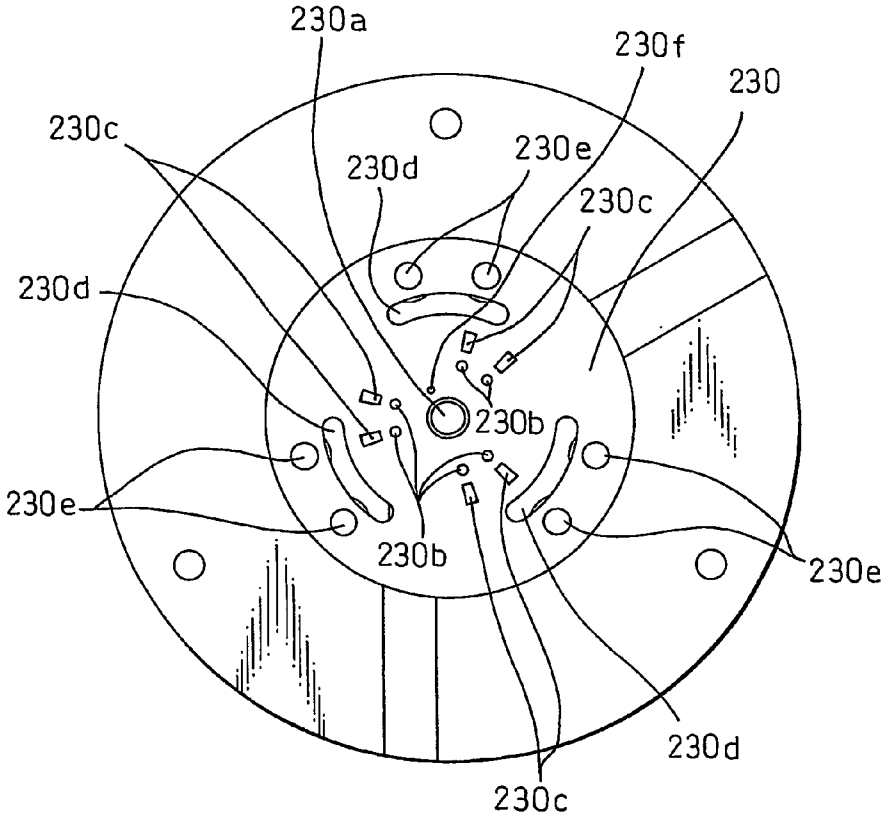
230a
230f
230
230c
230d
230e
230c
230d
230b
230e
230b
230e
230d
230c

Fig.19

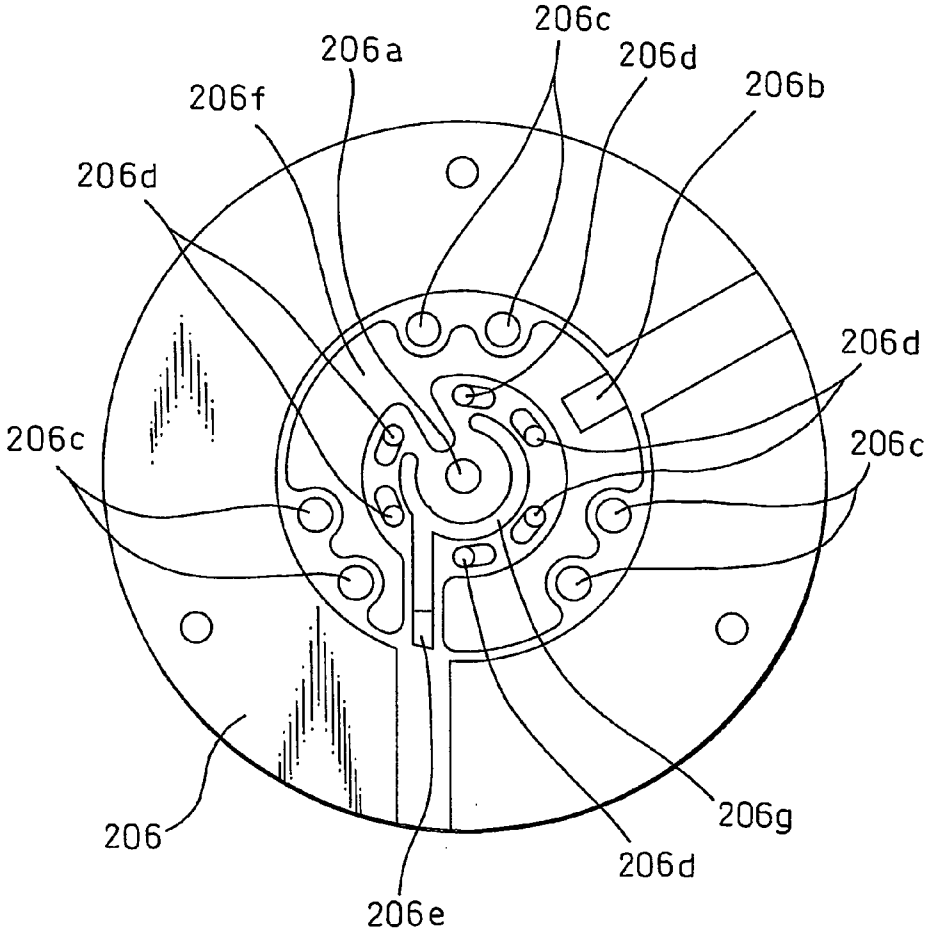
206c
206a
206d
206b
206f
206d
206d
206c
206c
206
206g
206d
206e

Fig. 20

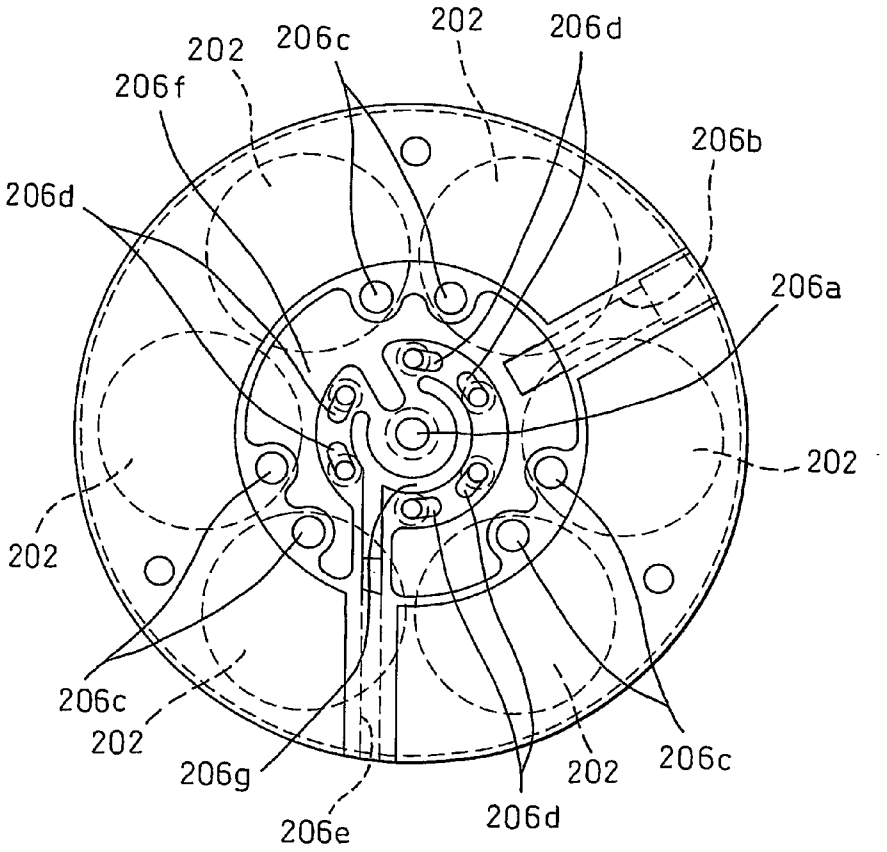
202
206c
202
206d
206f
206b
206d
206a
202
202
206c
202
206g
202
206c
206e
206d

Fig. 21

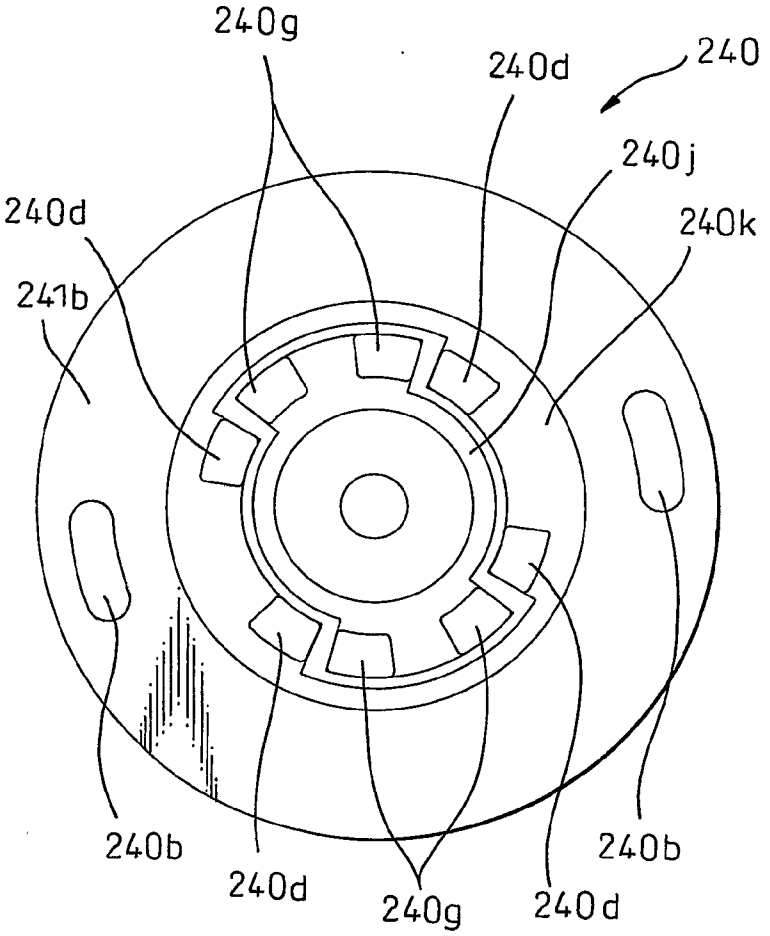

Fig.22

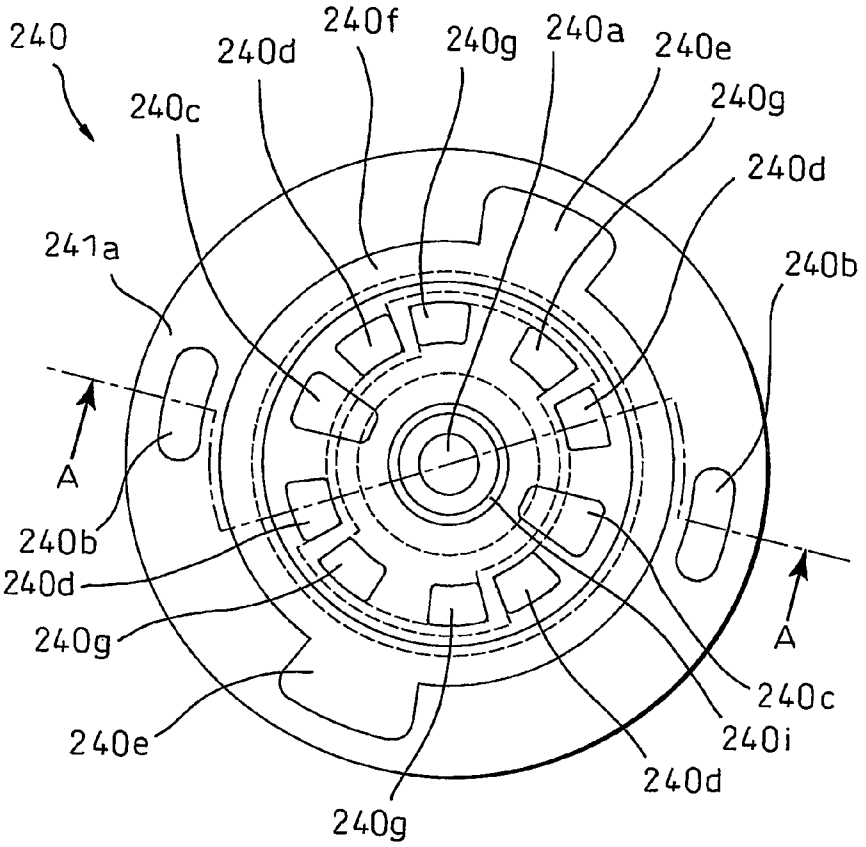
240
240d
240f
240g
240a
240e
240g
240c
240d
241a
240b
A
240b
240d
240g
240e
240g
240d
240i
240c
A

Fig.23

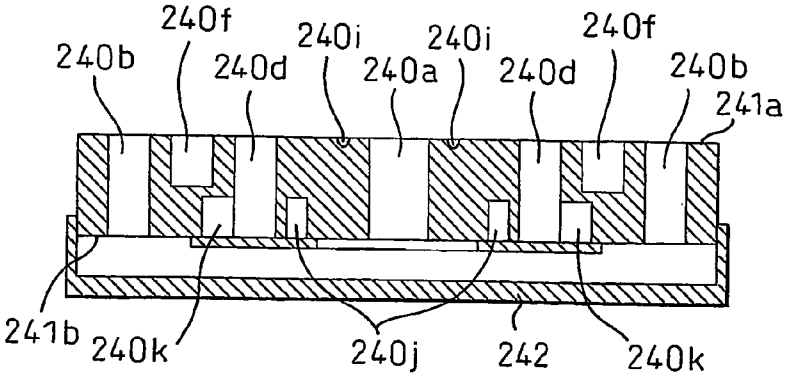
240f
240i
240i
240f
240b
240d
240a
240d
240b
241a
241b
240k
240j
242
240k

Fig.24

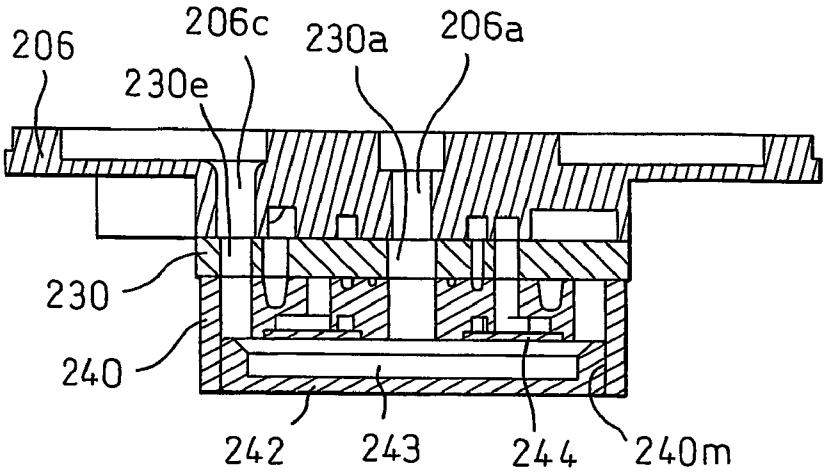
206
206c
230a
206a
230e
230
240
242
243
244
240m

Fig.25

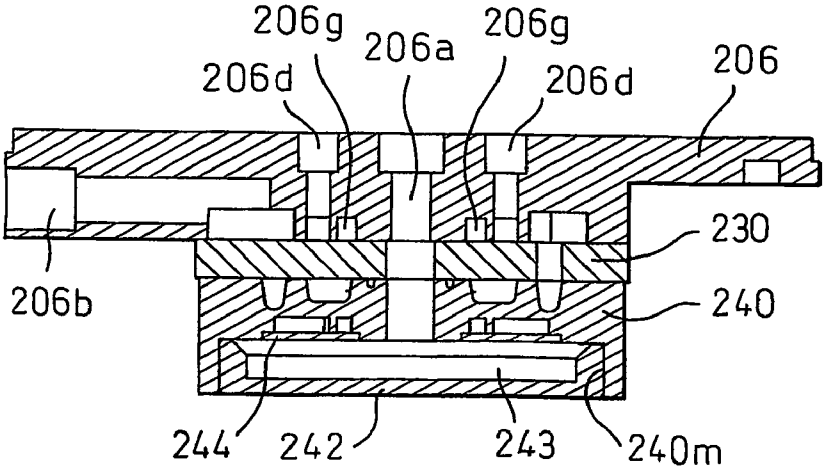
206g
206a
206g
206d
206d
206
230
206b
240
244
242
243
240m

Fig. 26

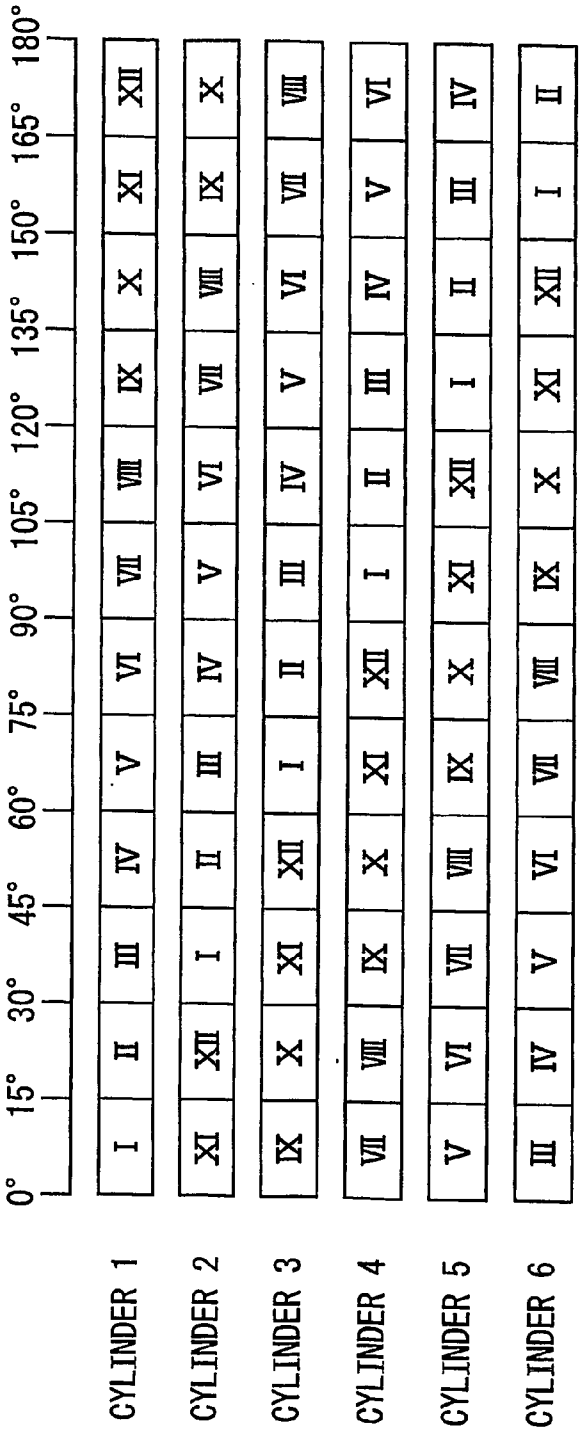
0°
15°
30°
45°
60°
75°
90°
105°
120°
135°
150°
165°
180°
CYLINDER 1
I II III IV V VI VII VIII IX X XI XII
CYLINDER 2
XI XII I II III IV V VI VII VIII IX X
CYLINDER 3
IX X XI XII I II III IV V VI VII VIII
CYLINDER 4
VII VIII IX X XI XII I II III IV V VI
CYLINDER 5
V VI VII VIII IX X XI XII I II III IV
CYLINDER 6
III IV V VI VII VIII IX X XI XII I II

Fig.27

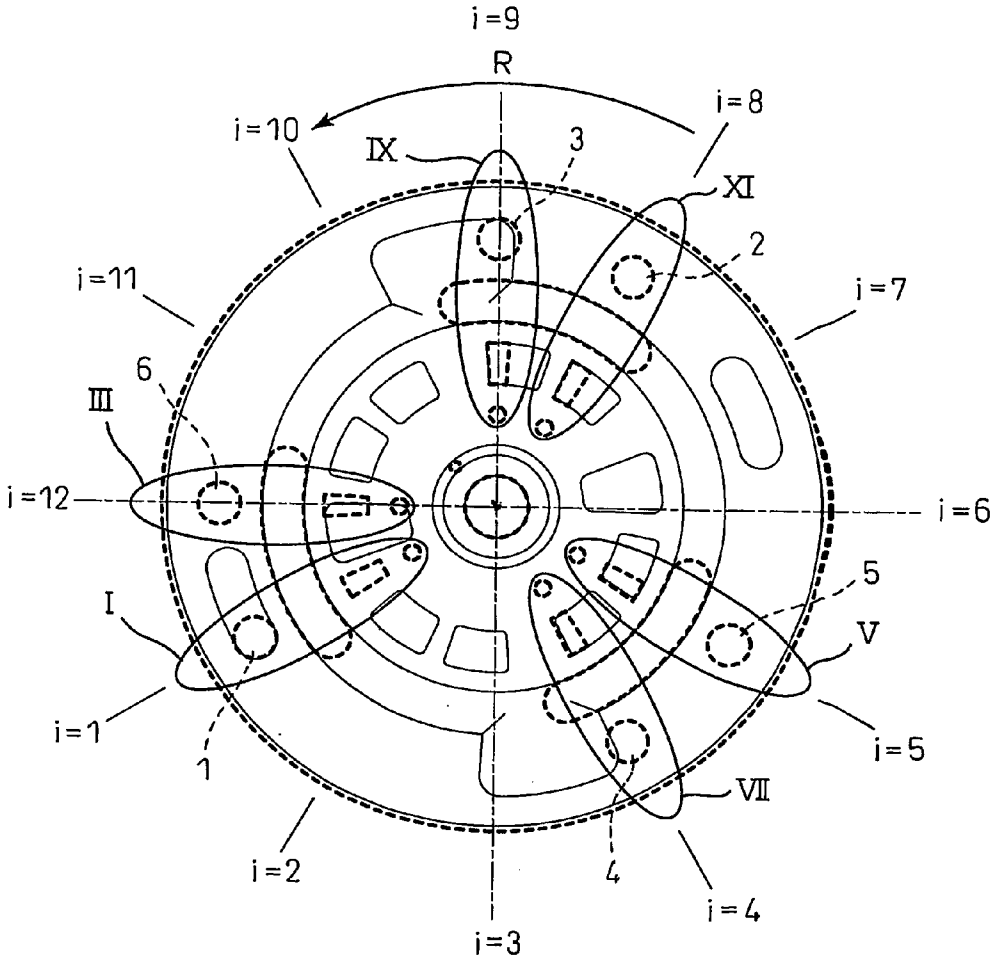

Fig.28

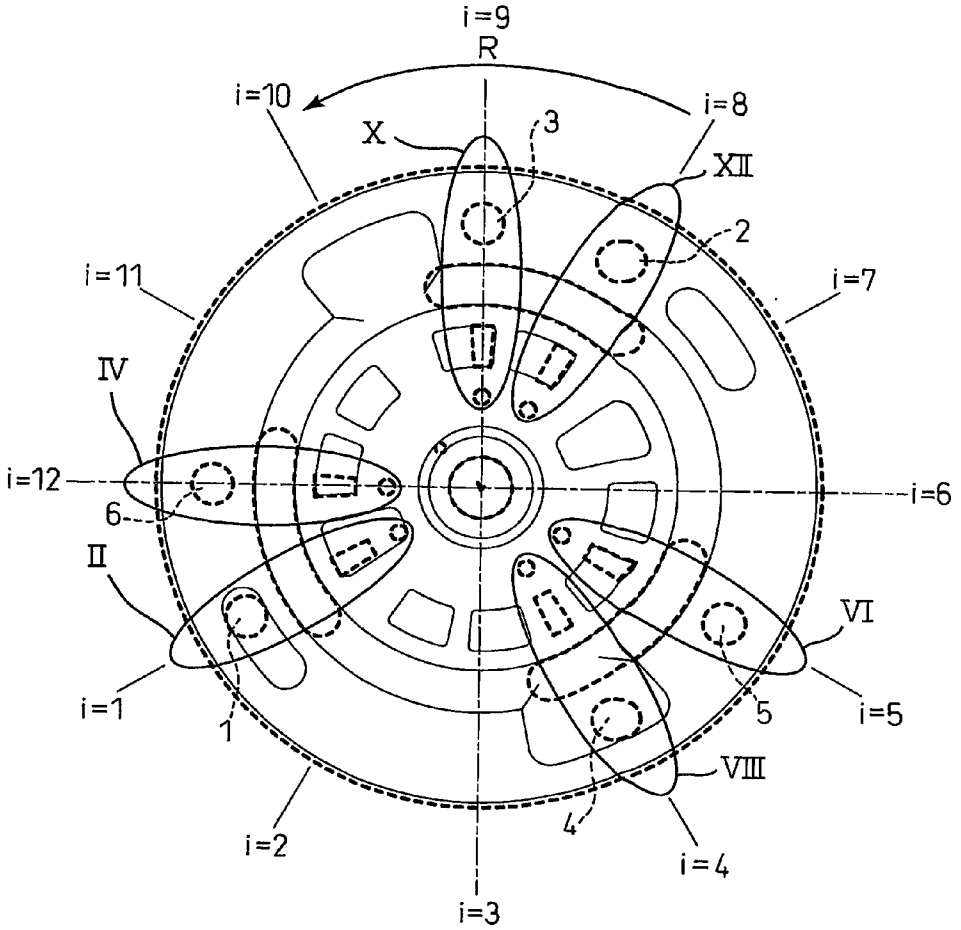

Fig.29

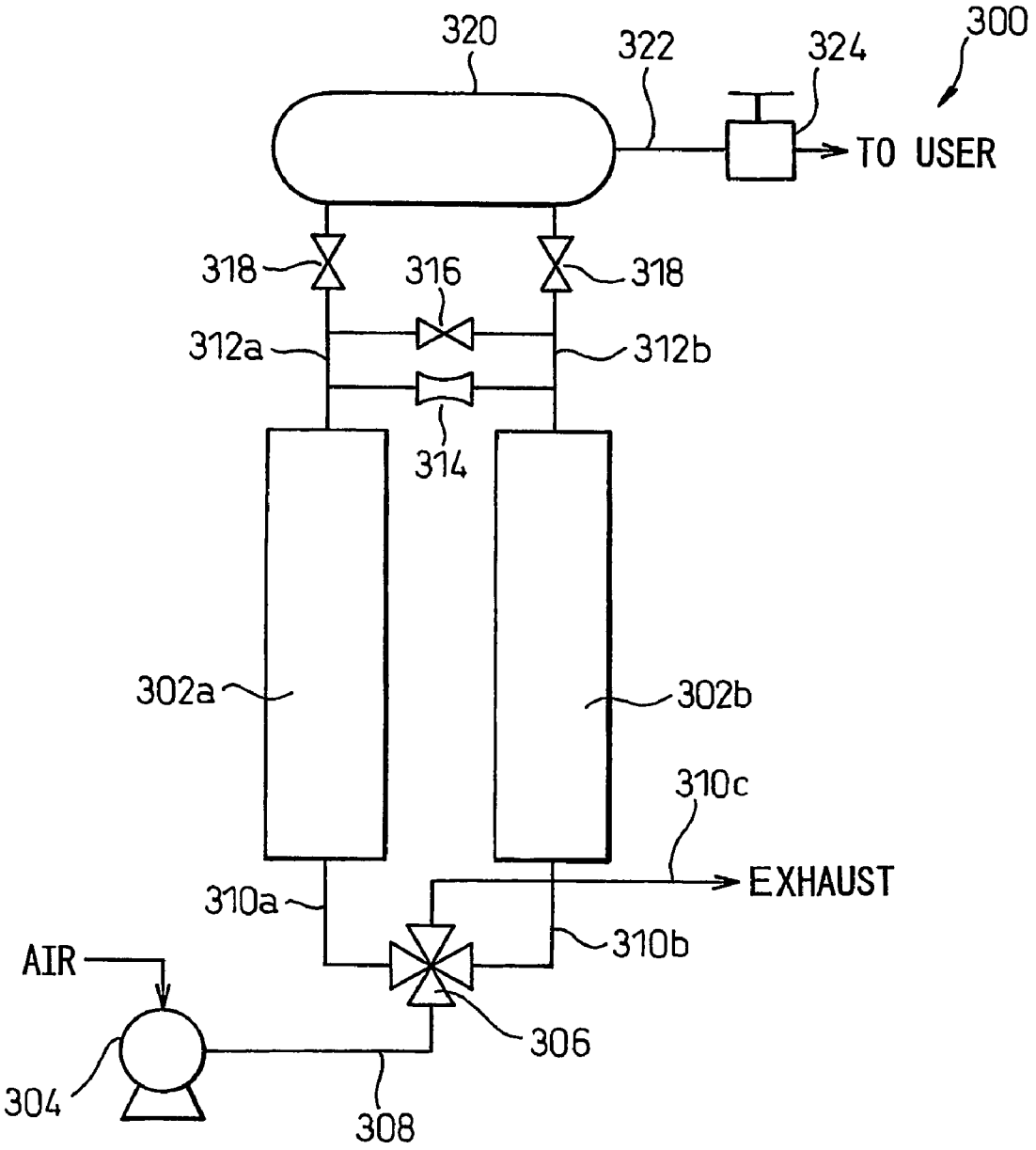
320
322
324
300
TO USER
318
316
318
312a
312b
314
302a
302b
310c
EXHAUST
310a
310b
AIR
306
304
308

# OXYGEN CONCENTRATING APPARATUS AND ROTARY VALVE

## BACKGROUND OF THE INVENTION

[0001] 1. Field of the Invention

[0002] The present invention relates to an oxygen concentrating apparatus and a rotary valve.

[0003] 2. Description of the Related Art

[0004] **FIG. 29** is a schematic illustration of a pressure swing type gas oxygen concentrating apparatus **300** which includes two adsorption cylinders **302***a* and **302***b*,an air compressor **304** for supplying compressed air to the adsorption cylinders **302***a* and **302***b* through conduit **308**, four-way directional control valve **306**, conduits **310***a* and **310***b*, an $O_2$ tank **320** to which the oxygen enriched gas is supplied from the adsorption cylinders **302***a* and **302***b* through output conduits **312***a* and **312***b* and shut off valves **318**. The oxygen enriched gas is supplied from the $O_2$ tank to a user through a conduit **322** and a flow control valve **324**. Provided between the output conduits **312***a* and **312***b* are a orifice **314** and a pressure equalizing valve **316**.

[0005] According to the oxygen concentrating apparatus **300**, it is difficult to control each of the steps of the oxygen concentrating process, which are disclosed in, for example U.S. Pat. No. 2,944,627, U.S. Pat. No. 3,237,377 and Japanese Unexamined Patent Publication (Kokai) No. 10-151315, and to increase the efficiency of the apparatus because four-way directional control valve **306** is used.

[0006] JPP '315 also describes an oxygen concentrating apparatus including a rotary valve, instead of the four-way directional valve, for switching the flow direction and controlling the steps of the oxygen concentrating process. However, the conventional rotary valve has a problem that there is unbalance in the pressure applied to the interface between the rotor and the stator of the rotary valve.

## SUMMARY OF THE INVENTION

[0007] The invention is directed to solve the above mentioned prior art problems, an the objective of the invention is to provide an oxygen concentrating apparatus which solves the above-described problems of the prior art.

[0008] According to the present invention, there is provided with an oxygen concentrating apparatus, for generating an oxygen enriched gas by adsorbing and removing nitrogen gas from air, comprising: a plurality of adsorption cylinders which is filled with holding an adsorbent which selectively adsorbs nitrogen gas more than oxygen gas, the adsorption cylinders having first and second orifices; a output conduit for directing the oxygen enriched gas to a user through the first orifice; means for supplying compressed air to the adsorption cylinders through the second orifice; means for evacuating nitrogen gas from the adsorption cylinders through the second orifice; and valve means for allowing the oxygen concentrating apparatus sequentially in each of the adsorption cylinders:

[0009] (1) to pressurize one of the adsorption cylinders by directing the compressed air through the second orifice thereof;

[0010] (2) to remove the oxygen enriched gas from said one of the adsorption cylinders to the output conduit through the first orifice thereof,

[0011] (3) to direct the oxygen enriched gas as a purge gas from said one of the adsorption cylinders through the first orifice thereof into one of the other adsorption cylinders through the first orifice thereof, from which one of the other adsorption cylinders the internal gas is evacuated; and

[0012] (4) to evacuate the internal gas out of said one of the adsorption cylinders through the second thereof.

[0013] Further, according to another feature of the present invention, there is provided an oxygen concentrating apparatus, for generating an oxygen enriched gas by adsorbing and removing nitrogen gas from air, comprising: a plurality of adsorption cylinders for holding an adsorbent which selectively adsorbs nitrogen gas more than oxygen gas, the adsorption cylinders having first and second orifices; a output conduit for directing the oxygen enriched gas to a user through the first orifice; means for supplying compressed air to the adsorption cylinders through the second orifice; means for evacuating nitrogen gas from the adsorption cylinders through the second orifice; and valve means for allowing the oxygen concentrating apparatus, sequentially in each of the adsorption cylinders:

[0014] (1) to pressurize one of the adsorption cylinders by directing the compressed air through the second orifice thereof;

[0015] (2) to remove the oxygen enriched gas from said one of the adsorption cylinders to the output conduit through the first orifice thereof,

[0016] (3) to reduce the pressure in said one of the adsorption cylinders by directing the oxygen enriched gas through the first orifice into one of the other adsorption cylinders through the first orifice thereof to increase the pressure in the one of the other adsorption cylinders; and

[0017] (4) to evacuate the internal gas out of said one of the adsorption cylinders through the second thereof.

[0018] Further, according to another feature of the present invention, there is provided a method of generating an oxygen enriched gas by adsorbing and removing nitrogen gas from air with an oxygen concentrating apparatus having a plurality of adsorption cylinders for holding an adsorbent which selectively adsorbs nitrogen gas more than oxygen gas, a output conduit for directing the oxygen enriched gas to a user, means for supplying compressed air to the adsorption cylinders, and means for evacuating nitrogen gas from the adsorption cylinders, the method comprising the steps of:

[0019] (1) pressurizing one of the adsorption cylinders by directing the compressed air;

[0020] (2) removing the oxygen enriched gas from said one of the adsorption cylinders to the output conduit;

[0021] (3) reducing the pressure in said one of the adsorption cylinders by directing the oxygen enriched gas into one of the other adsorption cylinders to increase the pressure in the one of the other adsorption cylinders;

[0022] (4) evacuating the internal gas out of said one of the adsorption cylinders; and

[0023] (5) increasing the pressure in said one of the adsorption cylinders by directing the oxygen enriched gas

into said one of the adsorption cylinders from one of the other adsorption cylinders in which the pressure is decreased in step (3).

[0024] Further, according to another feature of the present invention, there is provided a rotary valve, adapted to use in a flow system including a plurality of common flow passages and a selective flow passage group composed of a plurality of subgroups, each of the subgroups including the same number M of flow passages, for switching the fluid communications between at least one of the plurality of common flow passages and at least one of the flow passages of the selective flow passage group and/or between the flow passages of the subgroups, the rotary valve comprising: a stator comprising a plate member including opposing front and rear sides, a plurality of ports which extend between the front and rear sides through the plate member and fluidly communicate with the common flow passages and the flow passages of the plurality of subgroups of the selective flow passage group; a rotor rotatable about an axis relative to the stator, the rotor comprising a plate member including a front side contacting with the front side of the stator and an opposite rear side, the plate member of the rotor defining in its front side a plurality of openings each of which can fluidly communicate with each of the ports of the rotor, the plurality of openings of the stator being disposed symmetrically about the axis so that the configuration of the front side coincides with the configuration of the front side of the rotor when the rotor rotates by 1/n rotations (n: integer); the ports of the stator, which fluidly communicate with the flow passages of the different subgroups of the selective flow passage group, being disposed along circles of different diameter about the axis; each of the ports, fluidly communicating with the flow passages of one of the subgroups, is disposed at any one of (i)th point, (m+i)th point, (2m+i)th point, (3m+i)th point, . . . , ((n−1)m+i)th point (i: integer=1 to m) along the circle; and the points which equally divide the circle into a plurality of (nm) segments.

## DESCRIPTION OF THE DRAWINGS

[0025] These and other objects and advantages and further description will now be discussed in connection with the drawings in which:

[0026] **FIG. 1** is a schematic illustration of an oxygen concentrating apparatus according to a first embodiment of the present invention;

[0027] **FIG. 2** is partial section of a concentrator according to the first embodiment of the present invention;

[0028] **FIG. 3** an exploded perspective view of a rotary valve with a lower header of the concentrator of **FIG. 2**;

[0029] **FIG. 4** is a plan view of the lower header;

[0030] **FIG. 5** is plan view of a stator of the rotary valve attached to the lower header;

[0031] **FIG. 6** is a plan view similar to **FIG. 4** with the lower header shown by broken lines;

[0032] **FIG. 7** is a plan view of a front side of a stator of the rotary valve;

[0033] **FIG. 8** is a plan view of a rear side of a stator of the rotary valve;

[0034] **FIG. 9** is a plan view similar to **FIG. 7** with the stator shown by broken lines;

[0035] **FIG. 10 a** section of the assembly of the stator and rotor along line X-X in **FIG. 9**;

[0036] **FIG. 11 a** section of the assembly of the stator and rotor along line XI-XI in **FIG. 9**;

[0037] **FIG. 12** is a plan view of the front side of the rotor with the stator shown by solid lines for explaining the operation of the oxygen concentrator according to the first embodiment;

[0038] **FIG. 13** is a plan view similar to **FIG. 12** showing the front side of the rotor which rotates 15 degrees, relative to the stator, from the position shown in **FIG. 12** in the rotational direction R;

[0039] **FIG. 14** is a chart showing the cycle of the process conducted by the oxygen concentrator according to the first embodiment;

[0040] **FIG. 15** is a chart showing the cycle of the process conducted by the oxygen concentrator according to the first embodiment;

[0041] **FIG. 16** is a partial section of a concentrator according to a second embodiment of the present invention;

[0042] **FIG. 17** is a plan view of a rotary valve with a lower header of the concentrator of **FIG. 16**;

[0043] **FIG. 18** is a plan view of a stator of the rotary valve;

[0044] **FIG. 19** is a plan view the lower header;

[0045] **FIG. 20** is a plan view similar to **FIG. 19** with adsorption cylinders shown by broken lines;

[0046] **FIG. 21** is a plan view of a rear side of a rotor of the rotary valve;

[0047] **FIG. 22** is a plan view of a front side of a rotor of the rotary valve;

[0048] **FIG. 23** is a section of the rotor along line A-A in **FIG. 22**;

[0049] **FIG. 24** is a section of the assembly of the lower header, the stator and the rotor along line IIXIV-IIXIV in **FIG. 17**;

[0050] **FIG. 25** is a section of the assembly of the lower header, the stator and the rotor along line IIXV-IIXV in **FIG. 17**;

[0051] **FIG. 26** is a chart showing the cycle of the process conducted by the oxygen concentrator according to the second embodiment;

[0052] **FIG. 27** is a plan view of the front side of the rotor with the stator shown by solid lines for explaining the operation of the oxygen concentrator according to the second embodiment;

[0053] **FIG. 28** is a plan view similar to **FIG. 12** showing the front side of the rotor which rotates 15 degrees, relative to the stator, from the position shown in **FIG. 12** in the rotational direction R; and

[0054] **FIG. 29** is a schematic illustration of an oxygen concentrating apparatus of a prior art.

## DESCRIPTION OF THE PREFERRED EMBODIMENTS

[0055] With reference to the drawings, preferred embodiments of the present will be described below.

[0056] In **FIG. 1**, an oxygen concentrating apparatus according to a first embodiment of the present invention is shown. The oxygen concentrating apparatus **10** has an oxygen concentrator **100** which generates an oxygen enriched gas by adsorbing and separating nitrogen gas from the air, an air supplying means, comprising a compressor **12** and a filter **14**, for supplying compressed air to the oxygen concentrator **100** through an air supply conduit **16**, an exhausting means, comprising a vacuum pump **18** and a muffler **20**, for drawing nitrogen gas through exhaust conduit **22**, a reservoir or an $O_2$ tank **26**, a pressure regulating valve **28**, a flow control valve **30** which are disposed along an oxygen supply conduit **24** for directing the oxygen enriched gas to a user.

[0057] With reference to **FIG. 2**, the oxygen concentrator **100** includes a plurality of adsorption cylinders **102** which are arranged parallel to each other and filled with an adsorbent, for example, zeolite for selectively adsorbing nitrogen gas more than oxygen gas, upper and lower headers **104** and **106** holding the plurality of adsorption cylinders **102** therebetween, a rotary valve **120** and drive mechanism, comprising a motor **108** and a gear box **110**, for rotating the rotary valve **120** about an axis parallel to the adsorption cylinders **102**, a spring **112** for biasing a cover of the rotary valve **120**, as described below, and a bearing **114** which allows the rotary valve to rotate **120**.

[0058] The oxygen concentrator **100** according to the first embodiment has four adsorption cylinders **102** each of which includes a top or first orifice (not shown) and a bottom or second orifice (not shown). The upper header **104** includes six passages **104***a* which are fluidly connected to the upper orifices of the adsorption cylinders **102**. The lower header **106** includes a supply passage **106***a* which is fluidly connected to the compressor **12** through the air supply conduit **16**, an exhaust passage **106***b* which is fluidly connected to the vacuum pump **18** through the exhaust conduit **22**, first passages **106***c* which are fluidly connected to the bottom orifices of the adsorption cylinders **102** and second passages **106***d* which are fluidly connected to the passages **104***a* of the upper header **104** through connection conduits **116**.

[0059] With reference to **FIGS. 3 and 4**, the lower header **106** further includes a C-shaped output groove **106***g* extending around the centrally disposed supply passage **106***a*, a output passage **106***e* which opens to the output groove **106***g* and is fluidly connected to the oxygen supply conduit **24** and an exhaust groove **106***f* around the output groove **106***g* which fluidly communicates with the exhaust passage **106***b*.

[0060] In **FIG. 3**, the rotary valve **120** includes a stator **130** comprising a circular plate member, stationarily attached to the lower header **106**, and a rotor **140** comprising a circular plate member which is rotated by the motor **108** relative to the stator **130**. With reference to **FIGS. 5 and 6**, the stator **130** includes a centrally disposed supply port **130***a*, four output ports **130***b*, four first ports **130***c*, four exhaust ports **130***d*, four second ports **130***e* and a sealing port **130***f* which extend through the plate member of the stator **130**. The supply port **130***a* fluidly communicates with the supply passage **106***a* of the header **106**. The output ports **130***b* fluidly communicate with the output passage **106***e* through the output groove **106***g*. The first ports **130***c* fluidly communicate with the second passages **106***d* of the lower header **106**. The exhaust ports **130***d* fluidly communicate with the exhaust passage **106***b* through the exhaust groove **106***f*. The second ports **130***e* fluidly communicate with the first passages **106***c* of the lower header **106**. The sealing port **130***f* fluidly communicates with the exhaust passage **106***b* through the exhaust groove **106***f*.

[0061] With reference to **FIGS. 7-11**, the rotor **140** has a front face **141***a* contacting the stator **130** and an opposite rear face **141***b*. On the front face **141***a*, the rotor **140** defines three first recesses **140***c*, three second recesses **140***e* which are fluidly connected to each other by a circular groove **140***f*, three third recesses **140***g* and a circular sealing recess **140***i*. The circular groove **140***f* is disposed to fluidly communicate with the exhaust ports **130***d* of the stator **130**. On the rear face **141***b*, the rotor **140** defines a receptacle **140***m* for receiving a cover **144**, an inner groove **140***j* and a outer groove **140***k*. A flow passage **143** is defined between the cover **144** disposed in the receptacle **140***m* and the rotor **140**. The rotor **140** further includes a centrally disposed supply opening **140***a*, three first openings **140***b*, six second openings **140***d* and three third openings **140***h* which axially extend through the rotor **140**. The third openings **140***h* fluidly connect the third recesses **140***g* to the inner groove **140***j*.

[0062] With reference to **FIGS. 12-15**, the operation of the oxygen concentrator **100** according the first embodiment will be described below. In the first embodiment, the oxygen concentrator **100** includes four adsorption cylinders **102** the positions of which are indicated by reference numbers **1-4**, in **FIGS. 12 and 13**. In the following description, the operation of the oxygen concentrator **100** will be described in relation to one of the adsorption cylinders, cylinder **1** which is disposed at position **1**.

[0063] Step I (Pressurization Step)

[0064] The rotor **140** is at the home position shown in **FIG. 12** where one of the first openings **140***b* aligns with one of the second ports **130***e* of the stator **130** so that the air is supplied to cylinder **1** from the compressor **12** through the air supply conduit **16**, the supply passage **106***a* of the lower header **106**, the supply port **130***a* of the stator **130***a*, the supply opening **140***a* of the rotor **140**, the passage **143** defined between the stator **140** and the cover **144**, the first opening **140***b* of the rotor **140**, the second port **130***e* of the stator **130** and the lower orifice of cylinder **1**.

[0065] Step II (Pressurization-Generation Step)

[0066] The rotator **140** rotates in the direction R to a rotational position at 15 degrees from the home position where the first opening **140***b* is still aligned with the second port **130***e* and the compressed air is supplied to cylinder **1**, as described above. At the same time, the first recess **140***c* of the rotor **140** aligns with the output port **130***b* and the first port **130***c* of the stator **130**. This rotational position of the rotor **140** allows the oxygen enriched gas to flow from cylinder **1** to the user through the upper orifice of cylinder **1**, the passage **104***a* of the upper header **104**, the connection conduit **116**, second passage **106***d* of the lower header **106**,

the first ports **130***c* of the stator **130**, the first recess **140***c* of the rotor **140**, the output port **130***b* of the stator **130**, the output groove **106***g*, the output passage **106***e* of the lower header **106** and the output conduit **24**.

[**0067**] Step III (Generation Step)

[**0068**] The rotator **140** rotates to a rotational position at 30 degrees from the home position where the first opening **140***b* of the rotor **140** is not aligned with the second port **130***e* of the stator **130**, and therefore, the supply of the compressed to cylinder **1** is terminated. However, the first recess **140***c* is still aligned with both the output port **130***b* and the first ports **130***c* of the stator **130**. Therefore, the oxygen enriched gas is still supplied to the user from cylinder **1** as described above.

[**0069**] Step IV (Depressurization-Equalization Step)

[**0070**] The rotor **140** rotates to a rotational position at 45 degrees from the home position where two of the six second openings **140***d* align with the first ports **130***c* communicating with cylinders **1** and **3**. This rotational position of the rotor **140** allows the oxygen enriched gas to flow from cylinder **1** to cylinder **3** through the upper orifice of cylinder **1**, the passage **104***a* of the upper header **104**, the connection conduit **116**, the second passage **106***d* of the lower header **106**, the first port **130***c* of the stator **130**, the second opening **140***d*, the outer groove **140***k*, the second opening **140***d* of the rotor **140**, the first port **130***c* of the stator **130**, the second passage **106***d* of the lower header **106**, the connection conduit **116**, the passage **104***a* of the upper header **104** and the upper orifice of cylinder **4**. Thus, the pressure in cylinder **1** is reduced and the pressure in cylinder **3** is increased to equalize the pressure in cylinders **1** and **3**.

[**0071**] Step V (Cocurrent Depressurization Step)

[**0072**] The rotor **140** rotates to a rotational position at 60 degrees from the home position where two of the three third recesses **140***g* of the stator **140** align with the first ports **130***c* communicating with cylinders **1** and **4**. This rotational position of the rotor **140** allows the oxygen enriched gas to flow from cylinder **1** to cylinder **4**, as a purge gas through the upper orifice of cylinder **1**, the passage **104***a* of the upper header **104**, the connection conduit **116**, the second passages **106***d* of the lower header **106**, the first port **130***c* of the stator **130**, the third recess **140***g*, the third opening **140***h*, the inner groove **140***j*, the third opening **140***h*, the third recess **140***g* of the stator **140**, the first port **130***c* of the stator **130**, the second passages **106***d* of the lower header **106***d*, the connection conduit **116**, the passage **104***a* of the upper header **104** and the upper orifice of cylinder **4**. At the same time, a purge step, which will be described below, is conducted in cylinder **4**.

[**0073**] Step VI (Evacuation Step)

[**0074**] The rotor **140** rotates to a rotational position at 75 degrees from the home position where the second recess **140***e* of the rotor **140** aligns with the second port **130***e* of the stator **130**. This rotational position of the rotor **140** allows the gas in cylinder **1** to be evacuated by the vacuum pump **22** through the lower orifice of cylinder **1**, the first passage **106***c* of the lower header **106**, the second port **130***e* of the stator **130**, the second recess **140***e*, the circular groove **140***f* of the rotor **140**, the exhaust port **130***d* of the stator **130**, the exhaust groove **106***f*, the exhaust passage **106***b* of the lower header **106** and the exhaust conduit **22**.

[**0075**] Step VII (Purge Step)

[**0076**] The rotor **140** rotates to a rotational position at 90 degrees from the home position where the second port **130***e* of the stator **130** still aligns with the second recess **140***e* and two of the three third recesses **140***g* of the stator **140** align with the first ports **130***c* communicating with cylinders **1** and **2**. Therefore, the oxygen enriched gas is supplied, as a purge gas, to cylinder **1** from cylinder **2** as described in relation to Step V while the gas in cylinder **1** is still evacuated as described above.

[**0077**] Step VIII (Pressurization-Equalization Step)

[**0078**] The rotor **140** rotates to a rotational position at 105 degrees from the home position where two of the six second openings **140***d* align with the first ports **130***c* communicating with cylinders **1** and **3**. This rotational position of the rotor **140** allows the oxygen enriched gas to flow from cylinder **3** to cylinder **1** as described above in relation to Step IV.

[**0079**] As shown in the drawings, in the first embodiment, the four output ports **130***b*, the four first ports **130***c*, the four exhaust ports **130***d*, and the four second ports **130***e* are disposed along different circles about the rotational axis of the rotor **140**. Further, each of the ports fluidly communicating with each of the adsorption cylinders **102** are disposed at any one of (i)th point, (m+i)th point, (2m+i)th point, (3m+i)th point, . . . , ((n−1)m+i)th point (i: integer=1 to m) along the circle. Here, i is integer i=1 to m, m is number of the adsorption cylinders and n is the number of cycle of the above described process during one rotation of the rotor, that is 3 in the first embodiment. This arrangement prevents the concentrator **100** from executing the same steps of the above described process at a rotational position of the rotor **140**.

[**0080**] Further, according to the first embodiment of the present invention, the supply passage **106***a*, the exhaust passage **106***b* and the output passage **106***e* provide a common flow passages. The upper or first orifices of the adsorption cylinders **102** provide flow passages of a first subgroup of a selective flow passage group and the lower or second orifices **102***a* of the adsorptions cylinders **102** provide flow passages of a second subgroup of the selective flow passage group.

[**0081**] With reference to **FIGS. 16-28**, a second embodiment of the present invention will be described below.

[**0082**] The oxygen concentrator **200** according to the second embodiment includes a plurality of adsorption cylinders **202** which are arranged parallel to each other and filled with an adsorbent, for example, zeolite which selectively adsorbs nitrogen gas more than oxygen gas, upper and lower headers **204** and **206** holding the adsorption cylinders **202** therebetween, a rotary valve **220** and drive mechanism, comprising a motor **208** and gear box **210**, for rotating the rotary valve **220**, a spring **212** for biasing a cover of the rotary valve **220** and a bearing **214**, between the spring **212** and the rotary valve **220**, which allows the rotary valve **220** to rotate.

[**0083**] The oxygen concentrator **200** has six adsorption cylinders **202** each of which includes a top or first orifice (not shown) and a bottom or second orifice (not shown). The

upper header **204** includes six passages **204***a* which are fluidly connected to the upper orifices of the adsorption cylinders **202**. The lower header **206** includes a supply passage **206***a* which is fluidly connected to the compressor **12** (**FIG. 1**), an exhaust passage **206***b* which is fluidly connected to the vacuum pump **18** (**FIG. 1**) through the exhaust conduit **22** (**FIG. 1**), first passages **206***c* which are connected to the bottom orifices of the adsorption cylinders **202** and second passages **206***d* which are fluidly connected to the passages **204***a* of the upper header **204** through connection conduits **116**. With reference to **FIGS. 19 and 20**, the lower header **206** further includes a C-shaped output groove **206***g* extending around the centrally disposed supply passage **206***a*, a output passage **206***e* which opens to the output groove **206***g* and is fluidly connected to the oxygen supply conduit **24** (**FIG. 1**) and an exhaust groove **206***f*, around the output groove **206***g* which fluidly communicates with the exhaust passage **206***b*.

[**0084**] The rotary valve **220** includes a stator **230** comprising a circular plate member, stationarily attached to the lower header **206**, and a rotor **240** comprising a circular plate member which is rotated by the motor **208** relative to the stator **230**. With reference to **FIGS. 18 and 20**, the stator **230** includes a centrally disposed supply port **230***a*, six output ports **230***b*, six first ports **230***c*, three exhaust ports **230***d*, six second ports **230***e* and a sealing port **230***f*, which axially extend through the plate member of the rotor **240**. The supply port **230***a* fluidly communicates with the supply passage **206***a* of the header **206**. The output ports **230***b* fluidly communicate with the output passage **206***e* through the output groove **206***g*. The first ports **230***c* fluidly communicate with the second passages **206***d* of the lower header **206**. The exhaust ports **230***d* fluidly communicate with the exhaust passage **206***b* through the exhaust groove **206***f*. The second ports **230***e* fluidly communicate with the first passages **206***c* of the lower header **206**. The sealing port **230***f* fluidly communicates with the exhaust passage **206***b* through the exhaust groove **206***f*.

[**0085**] With reference to **FIGS. 21-23**, the rotor **240** has a front face **241***a* contacting the stator **130** and an opposite rear face **241***b*. On the front face **241***a*, the rotor **240** defines two first recesses **240***c*, two second recesses **240***e* which are fluidly connected to each other by a circular groove **240***f* and a circular sealing recess **240***i*. The circular groove **240***f* is disposed to fluidly communicate with the three exhaust ports **230***d* of the stator **230**. On the rear face **241***b*, the rotor **240** defines a receptacle **240***m* for receiving a cover **242**, an inner groove **240***j* and a outer groove **240***k*. A flow passage **243** is defined between the cover **242** disposed in the receptacle **240***m* and the rotor **240**. The rotor **240** further includes a centrally disposed supply opening **240***a*, two first openings **240***b*, four second openings **240***d* and four third openings **240***g*, which axially extend through the rotor.

[**0086**] With reference to **FIGS. 26-28**, the operation of the oxygen concentrator **200** according the second embodiment will be described below. In the second embodiment, the oxygen concentrator **200** includes the six adsorption cylinders **102** the positions of which are indicated by reference numbers **1-6**, in **FIGS. 26-28**. In the following description, the operation of the oxygen concentrator **200** will be described in relation to one of the adsorption cylinders, cylinder **1** which is disposed at position **1**.

[**0087**] Step I (Pressurization Step)

[**0088**] The rotor **240** is at the home position shown in **FIG. 27** where the first opening **240***b* aligns with one of the second port **230***e* of the stator **230** so that the air is supplied to cylinder **1** from the compressor **12** through the air supply conduit **16**, the supply passage **206***a* of the lower header **206**, the supply port **230***a* of the stator **230***a*, the supply opening **240***a* of the rotor **240**, the passage **243** defined between the stator **240** and the cover **242**, the first opening **240***b*, the second port **230***e* and the lower orifice of cylinder **1**.

[**0089**] Step II (Pressurization-Generation Step)

[**0090**] The rotator **240** rotates to a rotational position at 15 degrees from the home position where the first opening **240***b* is still aligned with the second port **230***e* and, therefore, the compressed air is supplied to cylinder **1**. At the same time, the first recess **240***c* of the rotor **240** aligns with both the output port **230***b* and the first port **230***c* of the stator **230**. This rotational position of the rotor **240** allows the oxygen enriched gas to flow from cylinder **1** to the user through the upper orifice of cylinder **1**, the passage **204***a* of the upper header **204**, the connection conduit **216**, second passage **206***d* of the lower header **206**, the first ports **230***c* of the stator **230**, the first recess **240***c* of the rotor **240**, the output ports **230***b* of the stator **230**, the output groove **206***g*, the output passage **206***e* of the lower header **206** and the output conduit **24**.

[**0091**] Step III (Generation Step)

[**0092**] The rotator **240** rotates to a rotational position at 30 degrees from the home position where the first opening **240***b* of the rotor **240** is not aligned with the second port, and therefore, the supply of the compressed to cylinder **1** is terminated. However, the first recesses **240***c* is still aligned with both the output ports **230***b* and the first ports **230***c* of the stator **230**. Therefore, the oxygen enriched gas is still supplied to the user from cylinder **1** as described above.

[**0093**] Step IV (First Depressurization-Equalization Step)

[**0094**] The rotor **240** rotates to a rotational position at 45 degrees from the home position where the second opening **240***d* of the rotor **240** aligns with the first port **230***c* communicating with cylinder **1** and, at the same time, the third opening **240***g* align with the first port **230***c* communicating with cylinder **3**. This rotational position of the rotor **240** allows the oxygen enriched gas to flow from cylinder **1** to cylinder **3** through the upper orifice of cylinder **1**, the passage **204***a* of the upper header **204**, the connection conduit **216**, the second passages **206***d* of the lower header **206**, the first port **230***c* of the stator **230**, the second opening **240***d*, the outer groove **240***k*, the third opening **240***g* of the rotor **240**, the first port **230***c* of the stator **230**, the second passage **206***d* of the lower header **206**, the connection conduit **216**, the passage **204***a* of the upper header **204** and the upper orifice of cylinder **3**. Thus, the pressure in cylinder **1** is reduced and the pressure in cylinder **3** is increased to equalize the pressure in cylinders **1** and **3**.

[**0095**] Step V (Second Depressurization-Equalization Step)

[**0096**] The rotor **240** rotates to a rotational position at 60 degrees from the home position where the second opening **240***d* align with the first port **230***c* communicating with cylinder **1** and at the same time the third opening **240***g* align

with the first port **230***c* communicating with cylinder **4**. This rotational position of the rotor **240** allows the oxygen enriched gas to flow from cylinder **1** to cylinder **4**

[**0097**] through the upper orifice of cylinder **1**, the passage **204***a* of the upper header **204**, the connection conduit **216**, the second passages **206***d* of the lower header **206**, the first port **230***c* of the stator **230**, the second opening **240***d*, the outer groove **240***k*, the third opening **240***g* of the rotor **240**, the first port **230***c* of the stator **230**, the second passage **206***d* of the lower header **206**, the connection conduit **216**, the passage **204***a* of the upper header **204** and the upper orifice of cylinder **3**. Thus, the pressure in cylinder **1** is reduced and the pressure in cylinder **4** is increased to equalize the pressure in cylinders **1** and **4**.

[**0098**] Step VI (Third Depressurization-Equalization Step)

[**0099**] The rotor **240** rotates to a rotational position at 75 degrees from the home position where the second opening **240***d* align with the first port **230***c* communicating with cylinder **1** and at the same time the third opening **240***g* align with the first port **230***c* communicating with cylinder **5**. This rotational position of the rotor **240** allows the oxygen enriched gas to flow from cylinder **1** to cylinder **5**

[**0100**] through the upper orifice of cylinder **1**, the passage **204***a* of the upper header **204**, the connection conduit **216**, the second passages **206***d* of the lower header **206**, the first port **230***c* of the stator **230**, the second opening **240***d*, the outer groove **240***k*, the third opening **240***g* of the rotor **240**, the first port **230***c* of the stator **230**, the second passage **206***d* of the lower header **206**, the connection conduit **216**, the passage **204***a* of the upper header **204** and the upper orifice of cylinder **3**. Thus, the pressure in cylinder **1** is reduced and the pressure in cylinder **5** is increased to equalize the pressure in cylinders **1** and **5**.

[**0101**] Step VII (Cocurrent Depressurization Step)

[**0102**] The rotor **240** rotates to a rotational position at 90 degrees from the home position where the third openings **240***g* of the stator **240** align with the first ports **230***c* communicating with cylinders **1** and **6**. This rotational position of the rotor **240** allows the oxygen enriched gas to flow, as a purge gas, from cylinder **1** to cylinder **6** through the lower orifice of cylinder **1**, through the upper orifice of cylinder **1**, the passage **204***a* of the upper header **204**, the connection conduit **216**, the second passages **206***d* of the lower header **206**, the first port **230***c* of the stator **230**, the third opening **240***g*, the third opening **240***h*, the inner groove **240***j*, the third opening **240***h*, the third opening **240***g* of the stator **240**, the first port **230***c* of the stator **230** of the stator **230**, the second passages **206***d* of the lower header **206***d*, the connection conduit **216**, the passage **204***a* of the upper header **204** and the upper orifice of cylinder **6**. At that time, a purge step, which will be described below, is conducted in cylinder **6**.

[**0103**] Step VIII (Evacuation Step)

[**0104**] The rotor **240** rotates to a rotational position at 105 degrees from the home position where the second port **230***e* of the stator **230** aligns with the second recess **240***e*. This rotational position of the rotor **240** allows the gas in cylinder **1** to be evacuated by the vacuum pump **22** through the lower orifice of cylinder **1**, the first passage **206***c* of the lower header **206**, the second port **230***e* of the stator **230**, the second recess **240***e*, the circular groove **240***f* of the rotor **240**, the exhaust ports **230***d* of the rotor **240**, the exhaust groove **206***f*, the exhaust passage **206***b* of the lower header **206** and the exhaust conduit **22**.

[**0105**] Step IX (Purge Step)

[**0106**] The rotor **240** rotates to a rotational position at 120 degrees from the home position where the second port **230***e* of the stator **230** still aligns with the second recess **240***e* and the third openings **240***g* of the stator **240** align with the first ports **230***c* communicating with cylinders **1** and **2**. Therefore, the oxygen enriched gas is supplied to cylinder **1** from cylinder **2** as described in relation to Step VII while the gas in cylinder **1** is still evacuated as described above.

[**0107**] Step X (Third Pressurization-Equalization Step)

[**0108**] The rotor **240** rotates to a rotational position at 135 degrees from the home position where the third openings **240***g* align with the first ports **230***c* communicating with cylinders **1** and **3**. This rotational position of the rotor **240** allows the oxygen enriched gas to flow from cylinder **3** to cylinder **1** as described above in relation to Step VI.

[**0109**] Step XI (Second Pressurization-Equalization Step)

[**0110**] The rotor **240** rotates to a rotational position at 150 degrees from the home position where the second openings **240***d* align with the first ports **230***c* communicating with cylinders **1** and **4**. This rotational position of the rotor **240** allows the oxygen enriched gas to flow from cylinder **4** to cylinder **1** as described above in relation to Step V.

[**0111**] Step XII (First Pressurization-Equalization Step)

[**0112**] The rotor **240** rotates to a rotational position at 165 degrees from the home position where the second openings **240***d* align with the first ports **230***c* communicating with cylinders **1** and **5**. This rotational position of the rotor **240** allows the oxygen enriched gas to flow from cylinder **5** to cylinder **1** as described above in relation to Step IV.

[**0113**] As shown in the drawings, in the second embodiment, the six output ports **230***b*, the six first ports **230***c*, the three exhaust ports **230***d* and the six second ports **230***e* are disposed along different circles about the rotational axis of the rotor **140**. Further, each of the ports fluidly communicating with each of the adsorption cylinders **202** are disposed at any one of (i)th point, (m+i)th point, (2m+i)th point, (3m+i)th point, . . . , ((n−1)m+i)th point (i: integer=1 to m) along the circle. Here, i is integer i=1 to m, m is number of the adsorption cylinders and n is the number of cycle of the above described process during one rotation of the rotor, that is 2 in the second embodiment. This arrangement prevents the concentrator **200** from executing the same steps of the above described process at a rotational position of the rotor **240**.

[**0114**] Further, according to the second embodiment of the present invention, the supply passage **206***a*, the exhaust passage **206***b* and the output passage **206***e* provide a common flow passages. The upper or first orifices of the adsorption cylinders **202** provide flow passages of a first subgroup of a selective flow passage group and the lower or second orifices of the adsorptions cylinders **202** provide flow passages of a second subgroup of the selective flow passage group.

**1**. An oxygen concentrating apparatus, for generating an oxygen enriched gas by adsorbing and removing nitrogen gas from air, comprising:

a plurality of adsorption cylinders which is filled with holding an adsorbent which selectively adsorbs nitrogen gas more than oxygen gas, the adsorption cylinders having first and second orifices;

a output conduit for directing the oxygen enriched gas to a user through the first orifice;

means for supplying compressed air to the adsorption cylinders through the second orifice;

means for evacuating nitrogen gas from the adsorption cylinders through the second orifice; and

valve means for allowing the oxygen concentrating apparatus sequentially in each of the adsorption cylinders:

(1) to pressurize one of the adsorption cylinders by directing the compressed air through the second orifice thereof;

(2) to remove the oxygen enriched gas from said one of the adsorption cylinders to the output conduit through the first orifice thereof,

(3) to direct the oxygen enriched gas as a purge gas from said one of the adsorption cylinders through the first orifice thereof into one of the other adsorption cylinders through the first orifice thereof, from which one of the other adsorption cylinders the internal gas is evacuated; and

(4) to evacuate the internal gas out of said one of the adsorption cylinders through the second thereof.

**2**. An oxygen concentrating apparatus, for generating an oxygen enriched gas by adsorbing and removing nitrogen gas from air, comprising:

a plurality of adsorption cylinders for holding an adsorbent which selectively adsorbs nitrogen gas more than oxygen gas, the adsorption cylinders having first and second orifices;

a output conduit for directing the oxygen enriched gas to a user through the first orifice;

means for supplying compressed air to the adsorption cylinders through the second orifice;

means for evacuating nitrogen gas from the adsorption cylinders through the second orifice; and

valve means for allowing the oxygen concentrating apparatus, sequentially in each of the adsorption cylinders:

(1) to pressurize one of the adsorption cylinders by directing the compressed air through the second orifice thereof;

(2) to remove the oxygen enriched gas from said one of the adsorption cylinders to the output conduit through the first orifice thereof,

(3) to reduce the pressure in said one of the adsorption cylinders by directing the oxygen enriched gas through the first orifice into one of the other adsorption cylinders through the first orifice thereof to increase the pressure in the one of the other adsorption cylinders; and

(4) to evacuate the internal gas out of said one of the adsorption cylinders through the second thereof.

**3**. An oxygen concentrating apparatus according to claim 1, wherein the first orifices of said one of the adsorption cylinders and one of the other adsorption cylinders are closed by said valve means when the oxygen enriched gas is directed from said one of the adsorption cylinders to said one of the other adsorption cylinders.

**4**. An oxygen concentrating apparatus according to claim 1, wherein said valve means comprises a rotary valve.

**5**. A method of generating an oxygen enriched gas by adsorbing and removing nitrogen gas from air with an oxygen concentrating apparatus having a plurality of adsorption cylinders for holding an adsorbent which selectively adsorbs nitrogen gas more than oxygen gas, a output conduit for directing the oxygen enriched gas to a user, means for supplying compressed air to the adsorption cylinders, and means for evacuating nitrogen gas from the adsorption cylinders, the method comprising the steps of:

(1) pressurizing one of the adsorption cylinders by directing the compressed air;

(2) removing the oxygen enriched gas from said one of the adsorption cylinders to the output conduit;

(3) reducing the pressure in said one of the adsorption cylinders by directing the oxygen enriched gas into one of the other adsorption cylinders to increase the pressure in the one of the other adsorption cylinders;

(4) evacuating the internal gas out of said one of the adsorption cylinders; and

(5) increasing the pressure in said one of the adsorption cylinders by directing the oxygen enriched gas into said one of the adsorption cylinders from one of the other adsorption cylinders in which the pressure is decreased in step (3).

**6**. A rotary valve, adapted to use in a flow system including a plurality of common flow passages and a selective flow passage group composed of a plurality of subgroups, each of the subgroups including the same number M of flow passages, for switching the fluid communications between at least one of the plurality of common flow passages and at least one of the flow passages of the selective flow passage group and/or between the flow passages of the subgroups, the rotary valve comprising:

a stator comprising a plate member including opposing front and rear sides, a plurality of ports which extend between the front and rear sides through the plate member and fluidly communicate with the common flow passages and the flow passages of the plurality of subgroups of the selective flow passage group;

a rotor rotatable about an axis relative to the stator, the rotor comprising a plate member including a front side contacting with the front side of the stator and an opposite rear side, the plate member of the rotor defining in its front side a plurality of openings each of which can fluidly communicate with each of the ports of the rotor, the plurality of openings of the stator being disposed symmetrically about the axis so that the

configuration of the front side coincides with the configuration of the front side of the rotor when the rotor rotates by 1/n rotations (n: integer);

the ports of the stator, which fluidly communicate with the flow passages of the different subgroups of the selective flow passage group, being disposed along circles of different diameter about the axis;

each of the ports, fluidly communicating with the flow passage of one of the subgroups, is disposed at any one of (i)th point, (m+i)th point, (2m+i)th point, (3m+i)th point, . . . , ((n−1)m+i)th point (i: integer=1 to m) along the circle; and

the points which equally divide the circle into a plurality of (nm) segments.

**7**. A rotary valve according to claim 6, wherein the number n is selected so that there is no greatest common divisor between n and m more than 1.

* * * * *