United States Patent [19]

Vrana et al.

[11] **Patent Number: 4,802,899**

[45] **Date of Patent: Feb. 7, 1989**

[54] **PRESSURE SWING ADSORPTION APPARATUS**

[75] Inventors: **Edward E. Vrana**, West Seneca; **Ravinder K. Bansal**, Amherst, both of N.Y.

[73] Assignee: **AirSep Corporation**, Buffalo, N.Y.

[21] Appl. No.: **98,879**

[22] Filed: **Sep. 21, 1987**

[51] **Int. Cl.**[4] **B01D 53/04**

[52] **U.S. Cl.** **55/161**; 55/179; 55/389

[58] **Field of Search** 55/31, 33, 35, 62, 68, 55/74, 75, 161–163, 179, 180, 316, 387, 389

[56] **References Cited**

U.S. PATENT DOCUMENTS

2,501,280	3/1950	Kemp et al.	55/162
2,665,769	1/1954	Walker et al.	55/180 X
3,016,978	1/1962	Hull	55/161 X
3,155,471	11/1964	Schymik et al.	55/179 X
3,164,452	1/1965	Westeren et al.	55/179 X
3,258,899	7/1966	Coffin	55/162
3,323,292	6/1967	Brown	55/179 X
3,448,561	6/1969	Seibert et al.	55/33 X
3,543,482	12/1970	Foster	55/162
3,552,096	1/1971	Dayson	55/179 X
4,231,768	11/1980	Seibert et al.	55/316 X
4,263,018	4/1981	McCombs et al.	55/179 X
4,272,265	6/1981	Snyder	55/161 X
4,371,384	2/1983	McCombs	55/179
4,373,938	2/1983	McCombs	55/179 X
4,378,982	4/1983	McCombs	55/179 X
4,509,959	4/1985	McCombs	55/179 X
4,545,790	10/1985	Miller et al.	55/179 X
4,584,001	4/1986	Dechene	55/163 X
4,631,073	12/1986	Null et al.	55/179 X
4,698,075	10/1987	Dechene	55/163

FOREIGN PATENT DOCUMENTS

2924052	12/1980	Fed. Rep. of Germany	55/179

Primary Examiner—Robert Spitzer

Attorney, Agent, or Firm—Luedeka, Hodges & Neely

[57] **ABSTRACT**

An air separator for separating at least one constituent element from air delivered from an air source by a pair of adsorption beds utilizes a control box and assembly of working components arranged in such a relationship to one another within the control box so as to facilitate service and maintenance of the air separator. The working components of the air separator include filtering componentry, a pressure regulator, a pair of feed valves, a pair of waste valves, a pair of product and equalization valves and a product flow controller operatively connected in flow communication with one another for routing the source air through the separator and which are arranged in a substantially vertical plane within the control box. Because the working components are arranged in a generally planar arrangement, each of the working components is readily and easily accessible.

16 Claims, 3 Drawing Sheets

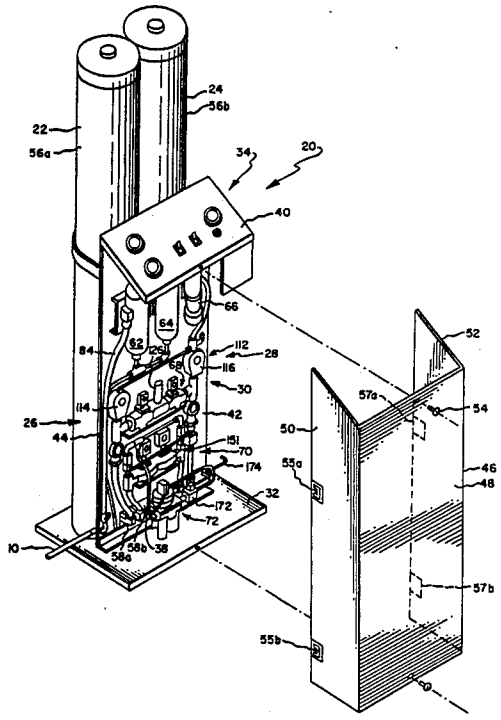

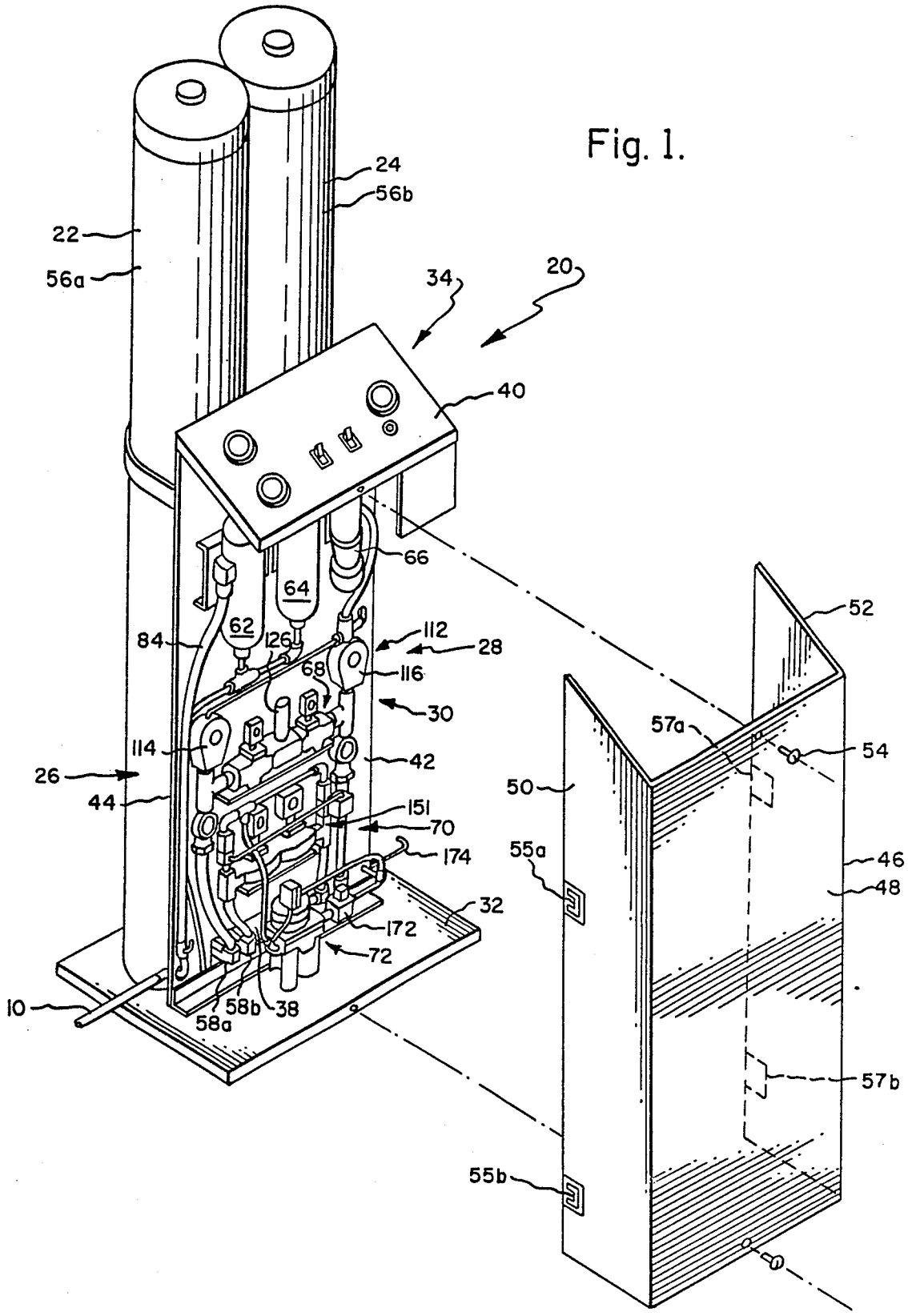
24
56b
22
56a
34
20
40
66
64
62
126
112
28
84
68
116
30
114
42
26
44
151
70
174
32
172
72
10
58b
38
58a
52
57a
54
50
55a
46
48
57b
55b

Fig. 1.

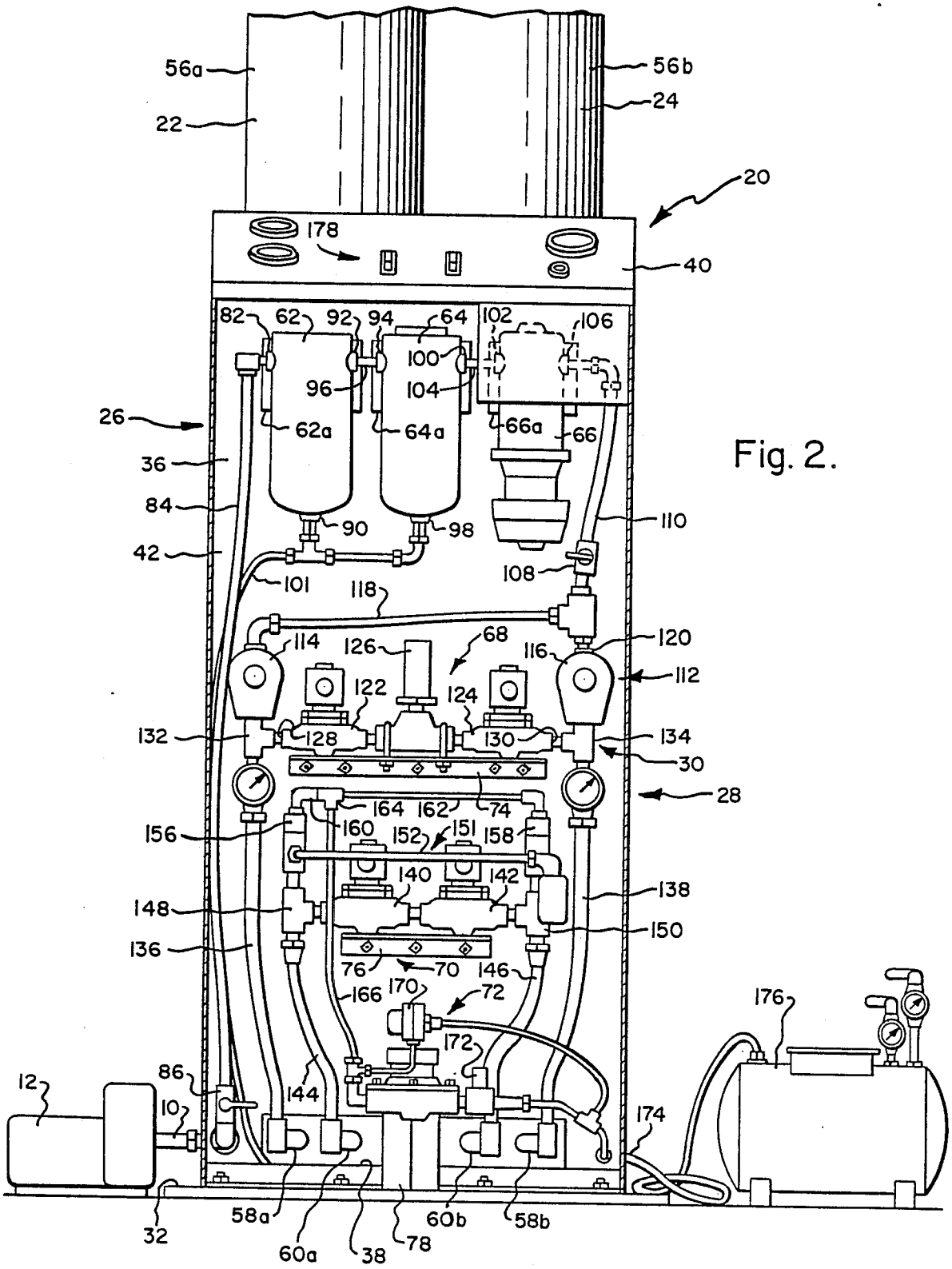
56a
56b
22
24
20
178
40
82
62
92
94
64
102
106
100
96
104
26
62a
64a
66a
66
36
84
90
98
110
42
101
108
118
68
114
126
116
120
122
124
112
132
128
130
134
30
28
164
162
74
156
160
152
151
158
140
142
138
148
150
136
76
70
146
166
170
72
176
172
86
144
12
10
174
32
58a
60a
38
78
60b
58b

Fig. 2.

Fig. 3.

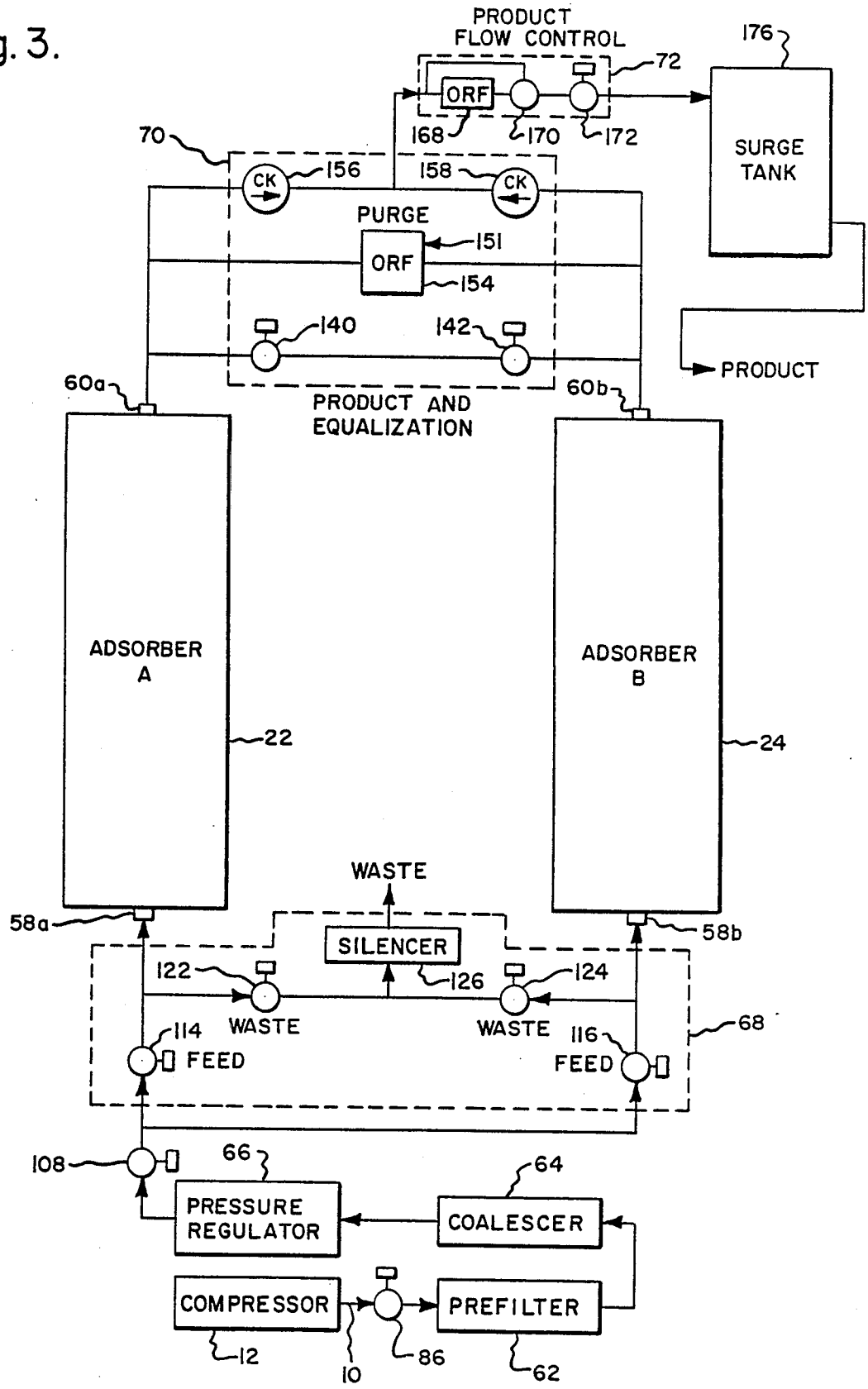
PRODUCT
FLOW CONTROL
72
176
ORF
168
170
172
SURGE
TANK
70
CK
156
158
CK
PURGE
151
ORF
154
140
142
PRODUCT
60a
60b
PRODUCT AND
EQUALIZATION
ADSORBER
A
ADSORBER
B
22
24
WASTE
58a
58b
SILENCER
122
126
124
WASTE
WASTE
114
116
68
FEED
FEED
108
66
64
PRESSURE
REGULATOR
COALESCER
COMPRESSOR
PREFILTER
12
10
86
62

PRESSURE SWING ADSORPTION APPARATUS

BACKGROUND OF THE INVENTION

This invention relates generally to apparatus for separating gas mixtures by pressure swing adsorption and relates more particularly to the arrangement of valves and other working components within such an apparatus.

The type of pressure swing adsorption apparatus with which this invention is concerned includes a pair of adsorbers each having a fixed bed of adsorbent material and an inlet and an outlet accommodating a flow of gas therethrough. The adsorbent material of each adsorber is adapted to fractionate at least one constituent from a gaseous mixture when the gaseous mixture is sequentially directed into the inlet of one adsorber so that the one adsorber performs adsorption while the other adsorber is simultaneously purged of adsorbed constituent with product gas withdrawn from the one adsorber and then the gaseous mixture is directed from the feed stream into the inlet of the other adsorber so that the other adsorber performs adsorption while the one adsorber is simultaneously purged of adsorbed constituent with product gas withdrawn from the outlet of the other adsorber. One such pressure swing adsorption apparatus is utilized for separating nitrogen from air delivered from an air source and for providing a product stream of relatively high purity oxygen.

For purposes of directing the flow of the gaseous mixture or product gas between the adsorbers in a desired manner, the adsorption apparatus commonly includes feed valving means, a purge loop and equalization valving means. The feed valving means is operatively connected between the inlets of the adsorbers and the feed stream for directing gaseous mixture from the feed stream into the inlet of one and the other adsorber in an alternating fashion so that only one adsorber at a time performs adsorption and produces product gas. The purge loop is connected between the outlets of the adsorbers for permitting product gas exiting the outlet of the adsorber performing adsorption to enter the outlet of the other adsorber for purging the other adsorber of adsorbed constituent and so that while one adsorber performs adsorption, the other adsorber undergoes desorption or regeneration. The equalization valving means is connected between the outlets of the adsorbers for equalizing the internal pressures of the adsorbers between preselected stages of apparatus operation.

Furthermore, waste valving means are associated with the inlets of the adsorbers through which product-depleted waste gas is discharged from the adsorber undergoing regeneration. For controlling the sequencing of the apparatus valving means, timing devices are commonly and operatively connected to the valving means for controlling the time periods during which the valving means are actuated and deactuated. Hence, the timing devices provide means by which the operation and various stages of the apparatus are automatically controlled.

It is an object of the present invention to provide a new and improved pressure swing adsorption apparatus wherein working components, such as the aforedescribed valving means of the apparatus are arranged in a manner facilitating service and maintenance of the apparatus.

Another object of the present invention is to provide such an apparatus which is uncomplicated in structure yet effective in operation.

SUMMARY OF THE INVENTION

This invention resides in a pressure swing adsorption apparatus having working components arranged in an advantageous relationship with one another.

The pressure swing adsorption apparatus includes a pair of adsorbers each having an inlet and an outlet and adapted to fractionate at least one constituent from a gaseous mixture delivered from a feed stream. In operation, the gaseous mixture from the feed stream is sequentially directed into the inlet of one adsorber so that the one adsorber performs adsorption while the other adsorber is simultaneously purged of adsorbed constitutent with product gas withdrawn from the outlet of the one adsorber and then directing the gaseous mixture from the feed stream into the inlet of the other adsorber so that the other adsorber performs adsorption while the one adsorber is simultaneously purged of adsorbed constituent with product gas withdrawn from the outlet of the other adsorber.

The apparatus further includes feed and waste valving means associated with the inlets of the adsorbers through which the gaseous mixture is selectively routed to the inlet of one or the other adsorber for the production of product gas and through which product-depleted waste gas is discharged from the adsorber being purged. Furthermore, a purge loop and equalization valving means are associated with the outlets of the adsorbers permitting the adsorbers to communicate with one another through the outlets thereof for the purposes of purging one and then the other of the adsorbers and for equalizing the internal pressure of the adsorbers between preselected stages of adsorber operation.

The improvement is characterized in that the feed valving means, the waste valving means and the equalization valving means are disposed in such a relationship to one another that service and maintenance of the apparatus is facilitated.

BRIEF DESCRIPTION OF THE DRAWING FIGURES

FIG. **1** is a perspective view of an air separator in accordance with the present invention shown with its front cover detached from the remainder of the separator.

FIG. **2** is a fragmentary plan view of the FIG. **1** separator shown with its front cover removed and an associated compressor and surge tank.

FIG. **3** is a block diagram illustrating the flow connections between working components of the Fig. separator.

DETAILED DESCRIPTION OF THE ILLUSTRATED EMBODIMENT

Turning now to the drawing in greater detail and considering first FIG. **1**, there is shown an embodiment, generally indicated **20**, of an apparatus in accordance with the present invention for fractionating at least one component or constituent from a gaseous mixture by pressure swing adsorption. The gaseous mixture is supplied to the apparatus **20** by a feed gas stream which flows along an input conduit **10** and is moved therealong by means of a pump or compressor **12** (FIG. **2**). As will be apparent hereinafter, the apparatus **20** is

specifically described and illustrated in relation to the application of pressure swing adsorption to the fractionation of air to produce an oxygen-rich stream. Hence, the gaseous mixture supplied to the apparatus **20** by means of the conduit **10** is compressed atmospheric air.

With reference to FIGS. **1** and **2**, the apparatus, or air separator, **20** includes a base **32**, a pair of upstanding adsorber units or towers **22,24**, a control box **26**, and an assembly **28** of working components, generally indicated **30** and hereinafter described, for routing the flow of source air through the separator **20**. The control box **26** is supported upon the base **32** and includes housing means, generally indicated **34**, defining a planar back **36** and a top **40**. The back **36** is oriented generally vertically and defines a front surface **42** and a back surface **44**. For a reason which will be apparent hereinafter, the back **36** defines an access slot **38** adjacent the lower end thereof. Furthermore, each of the back **36**, and top **40** is constructed of a suitably rigid material, such as steel, and can be formed from a single sheet of steel bent so as to define corners at appropriate locations.

The control box **26** further includes a cover **46** having a front **48** and two opposite sides **50,52** each extending at a right angle to the front **48**. The front **48** and sides **50,52** can be integrally formed from a single sheet of steel and are so shaped that when the cover **46** is positioned in operative relationship with the housing means **34**, the cover **46** and housing means **34** cooperate to provide a protective enclosure for the component assembly **28**. Screws **54** and latches **55*a*, 55*b*, 57*a*** and **57*b*** are utilized to join the cover front **48** to the back **36** and the housing means top **40** to thereby fixedly and releasably attach the cover **46** to the housing means **34**.

With reference to FIGS. **2** and **3**, each adsorber **22** or **24** includes an elongated, substantially elongated vessel **56*a*** or **56*b*** supported upright upon the base **32** and having an interior cavity which is substantially filled with a bed of adsorption material adapted to adsorb nitrogen from air routed therethrough. Furthermore, each adsorber **22** or **24** includes an inlet **58*a*** or **58*b*** and an outlet **60*a*** or **60*b*** adjacent the lower end of the corresponding adsorber vessel **56*a*** or **56*b*** wherein the inlet and outlet of each adsorber **22** or **24** are in flow communication with one another through the bed of adsorption material contained therein. Hence, air directed into each adsorber inlet **58*a*** or **58*b*** is exposed to the adsorption material before exiting the corresponding adsorber outlet **60*a*** or **60*b***.

The adsorption beds of the adsorbers **22,24** may be comprised of any of a number of adsorbent materials such as activated carbon, silica gel or a molecular sieve material known as sodium alumina silicate. Characteristically, the adsorbent material adsorbs nitrogen from air routed through the corresponding adsorber **22** or **24** from the inlet to the outlet **60** thereof so that the gaseous product exiting the adsorber outlet is a high purity oxygen gas. Furthermore, the adsorbent material is adapted to release its adsorbed nitrogen when purged by a purge gas for purposes of regenerating the adsorbent material. As will be explained hereafter, only one of the adsorbers **22** or **24** performs adsorption at any one time while the other adsorber **24** or **22** undergoes regeneration. For increasing the efficiency of regeneration, an amount of the high purity oxygen produced by the adsorber **22** or **24** performing adsorption is used to purge the adsorber **24** or **22** undergoing regeneration.

With reference to FIG. **2**, the working components **30** of the separator **20** include a prefilter **62**, a coalescer **64**, a pressure regulator **66**, a waste and feed manifold assembly **68**, a product manifold assembly **70** and a product flow control assembly **72**. The prefilter **62** and coalescer **64** are mounted in side-by-side relationship against the back **36** of the control box **26** and adjacent the top **40** thereof. The pressure regulator **66** is operatively mounted against the back **36** of the control box **26** adjacent the top **40** thereof and to one side, or to the right as shown in FIG. **2**, of the coalescer **64**. Each of the prefilter **62**, coalescer **64** and regulator **66** is supportedly fastened to the front surface **42** of the control box back **36** by means of screws and appropriate brackets **62*a*, 64*a*** and **66*a***.

The waste and feed manifold assembly **68** is comprised of a generally linear arrangement of items, hereinafter described, disposed immediately below the prefilter **62**, coalescer **64** and pressure regulator **66** and oriented in a manner so as to extend generally horizontally across the control box back **36**. Similarly, the product manifold assembly **70** includes items, hereinafter described, arranged in a generally linear arrangement and disposed immediately below the waste and feed manifold assembly **68** so as to extend generally horizontally across the control box back **36**. For attachment of the waste and feed manifold assembly **68** and product manifold assembly **70** to the control box back **36**, a pair of angle members **74,76** having a pair of angularly related legs are affixed to the back **36** of the control box **26** so that one of its angularly related legs extends generally forwardly of the control box back **36**. The waste and feed manifold assembly **68** and product manifold assembly **70** are each, in turn, supportedly attached atop the forwardly-extending leg of the corresponding angle member **74** or **76**.

With reference still to FIG. **2**, the product flow control assembly **72** includes items, hereinafter described, disposed generally below the product manifold assembly **70**. A support pedestal **78** is supported upright upon the base **32**, and the product flow control assembly **72** is supported atop the pedestal **78** so as to be positioned adjacent and in front of the control box back **36**. The pedestal **78** and the product flow control assembly **72** are attached to the base **32** and pedestal **28**, respectively, by means of bolts.

With reference still to FIG. **2**, the input conduit **10** is connected to the inlet, indicated **82**, of the prefilter **62** by means of piping **84** and a shutoff valve **86**. The input conduit **10** enters the control box **26** through a hole in the back **36** (FIG. **1**) and is operatively connected to the inlet side of the shutoff valve **86**. The piping **84** is, in turn, connected between the outlet side of the valve **86** and the prefilter inlet **82**. As air is routed through the prefilter **62**, impurities such as liquids and coarse particles which may be carried by the flow of source air are removed and discharged through a prefilter outlet **90**. The air stream filtered by the prefilter **62** exits through an additional prefilter outlet **92**.

The coalescer **64** includes an inlet **94** operatively connected to the prefilter outlet **92** by means of piping **96** for receiving the air filtered by the prefilter **62**. As air is routed through the coalescer **64**, the fine impurities carried by the stream of source air and which escape collection by the prefilter **62** are coalesced and discharged through a coalescer outlet **98**. The air stream filtered by the coalescer **64** exits through an additional coalescer outlet **100**. Each of the coalescer outlet **98** and prefilter outlet **90** are operatively connected to a dis-

charge tube **101** for routing the filtered and coalesced particles from the control box **26**.

The pressure regulator **66** includes an inlet **102** which is operatively connected to the coalescer outlet **100** by means of piping **104** and includes an outlet **106** which is connected to a shutoff valve **108** by means of piping **110**. In operation, the pressure regulator **66** reduces the pressure of the source air supplied by the compressor **12** to a predetermined pressure. If, for example, the separator **20** is designed to operate within an air pressure range of about sixty to seventy psig and air is delivered from the compressor **12** at about eighty psig, the regulator **66** operates to reduce the pressure of air passing through the regulator **66** by about ten to twenty psig.

With reference to FIG. **2**, the waste and feed manifold **68** includes valving means **112** in the form of a pair of feed valves **114,116** connected between the shutoff valve **108** and the adsorber inlets **58***a*, **58***b* for routing air delivered from the pressure regulator **66** to the adsorber inlets **58***a*,**58***b*. In this connection, two sections of piping **118** and **120** appropriately extend from the outlet of the shutoff valve **108**, and the valving means **112** includes a pair of feed valves **114,116** connected in-line between a corresponding one of the piping **118** and **120** and the adsorber inlet **58***a* and **58***b*. Connected between each feed valve **114** or **116** and a corresponding adsorber inlet **58***a* or **58***b* is a T-connection **132** or **134** and a section of piping **136** or **138**.

The waste and feed manifold **68** further includes a pair of waste valves **122** and **124** and a silencer **126**. The waste valves **122** and **124** include inlets **128,130**, respectively, operatively joined in flow communication with the outlet of a corresponding feed valve **114** or **116** by means of a corresponding T-connection **132** or **134**. The silencer **126** is operatively connected to the outlets of the waste valves **122** and **124** for receiving gaseous product exiting the waste valves **122** and **124**. In operation, gaseous product entering either waste valve **122** or **124** is discharged to the atmosphere through the silencer **126**. Sounds normally associated with the discharging of a pressurized stream of gas to the atmosphere are muffled by the silencer **126**.

As best shown in FIG. **2**, the waste valves **122** and **124** and silencer **126** are arranged in a generally linear side-by-side arrangement **30** so that the silencer **126** is positioned between the waste valves **122** and **124**. Furthermore, the waste valves **122,124** and silencer **126** are oriented within the control box **26** so that the linear arrangement provided thereby is oriented substantially horizontally. The feed valves **114,116** are oriented generally outboard of the waste valves **122,124** so that each feed valve **114** or **116** is arranged to one side of a corresponding waste valve **122** or **124**.

The product manifold assembly **70** is associated with the outlets **60***a*, **60***b* of the adsorbers **22** and **24** and includes a pair of product and equalization valves **140** and **142** for equalizing the internal pressure of the adsorbers **22** and **24** between product-producing and regeneration cycles. The product equalization valves **140** and **142** are operatively connected to the adsorber outlets **60***a* and **60***b* by means of piping **144** and **146** and T-connections **148** and **150**. By opening the valves **140** and **142**, the adsorber containers **56***a*,**56***b* communicate with one another through the adsorber outlets **60***a*,**60***b* in a manner permitting the internal pressure of the adsorbers **22** and **24** to equalize. By closing the valves **140** and **142**, flow of gaseous product between the adsorber outlets **60***a* and **60***b* through the valves **140** and **142** is prevented.

As best shown in FIGS. **2**, the equalization valves **140** and **142** are arranged in a substantially linear, side-by-side arrangement and are arranged within the control box so that the linear arrangement provided thereby is oriented substantially horizontally. Furthermore, the equalization valves **140** and **142** are disposed generally beneath the waste valves **122,124**.

With reference still to FIG. **2**, there is illustrated a purge loop **151** including a section of purging piping **152** connected in parallel flow relation to the product equalization valves **140** and **142**. Mounted within the purge piping **152** is a purge orifice **154** (FIG. **3**). During a regeneration operation of one of the adsorbers **22,24**, the purge orifice **154** limits the amount of gaseous product permitted to move between the outlets **60***a*,**60***b* of the adsorbers **22,24**. Furthermore, and with reference to FIGS. **2** and **3**, a pair of check valves **156,158** are connected in parallel flow relation to the product equalization valves **140,142** by way of piping sections **160,162** and a T-connection **164**. In operation, the check valves **156,158** restrict the movement of gaseous product through the piping **160** and **162** to one direction so that all of the gaseous product moving through the check valves **156,158** is directed out of the T-connection **164** through a piping conduit **166**.

The product flow control assembly **72** is connected to the T-connection **164** through the piping conduit **166** for receiving gaseous product flowing therethrough. The product flow control assembly **72** defines an orifice **168** (FIG. **3**) and includes pressure sensing means **170** for sensing pressure of the air or gaseous product at preselected locations in the separator piping. Also associated with the product flow control assembly **72** is a solenoid valve **172** through which product gases which exit the product flow control assembly **72** are routed. Attached to the discharge or downstream side of the solenoid valve **172** is a section of piping **174** which extends through the control box through a hole in the back **36** (FIG. **1**) through which product gas exits the separator **20**. During operation of the separator **20** the product flow control assembly **72** and solenoid valve **172** effectively provide constant oxygen purity at a regulated pressure. In the illustrated view of FIG. **2**, the gaseous product produced by the separator **20** is delivered to a surge tank **176** for use.

Operation of the air separator **20** can be described briefly through a description of the sequencing of the valving means of the separator **20**. Before the air separator **20** is initially turned ON, the equalization valves **140,142** are opened to permit the internal pressures of the adsorbers **22,24** to equalize. Meanwhile, the feed valves **114,116** and waste valves **122,124** are closed. At start-up of the separator **20**, the equalization valves **140** and **142** are closed, and feed valve **114** and waste valve **124** are opened. The source air entering the separator **20** through the conduit **10** is thereby directed through the adsorber **22** from its inlet **58***a* to its outlet **60***a* so that high-purity oxygen is produced thereby, and an amount of oxygen emitted from the adsorber outlet **60***a* is directed through the purge orifice **154** (FIG. **3**), through the adsorber **24** from the outlet **60***b* to the inlet **58***b* thereof, and through the waste valve **124**.

When the adsorber **22** becomes about saturated, each of the feed valve **114** and waste valve **124** is closed and the equalization valves **140,142** are opened to thereby permit the internal pressures of the adsorbers **22,24** to

equalize. Once the adsorber pressures are equalized, the equalization valves **140,142** are closed and the feed valve **116** and waste valve **122** are opened. The source air entering the separator **20** through the conduit **10** is thereby directed through the adsorber **24** from its inlet **58*b*** to its outlet **60*b*** so that high-purity oxygen is produced thereby, and an amount of oxygen emitted from the adsorber outlet **60b** is directed through the purge orifice **154** (FIG. **3**), through the adsorber **24** from the outlet **60*a*** to the inlet **58*a*** thereof, and through the waste valve **122**.

When the adsorber **24** becomes about saturated, each of the feed valve **116** and waste valve **122** is closed and the equalization valves **140,142** are opened to thereby permit the internal pressures of the adsorbers **22,24** to equalize. At that point, the cycles of operation are repeated with the closing of equalization valves **140,142** and reopening of the feed valve **112** and the waste valve **124**. It follows that while one adsorber produces oxygen-righ product gas in a product-producing cycle, the other adsorber is being purged of the adsorber air constituent in a regeneration operation, and vice-versa.

Each of the aforementioned feed, waste and equalization valves is preferably a solenoid-type valve responsive to a turning on or shutting off of power to the valve, and control of the various product-producing and regeneration operations can be had by appropriately sequencing the opening and closing of the aforedescribed feed, waste and equalization valves. In the separator **20**, control of the aforedescribed valves is achieved by timing mechanisms associated with control switches **178** (FIG. **2**) mounted within the control box **26** in the top **40** thereof and operatively wired to the valves for turning the valves ON and OFF at the end of a predetermined period of time. Hence, product-producing and regeneration operations are automatically controlled in the separator **20** by automatically controlling the amount of time that each of the feed, waste and equalization valves are opened and closed.

It will be understood that the aforedescribed invention accomplishes its intended objects in that the working components **30**, in the form of feed valves **114,116**, waste valves **122,124** and equalization valves **140,142**, are mounted in such a relationship with one another within the control box **26** that access to each component **30** is facilitated. The prefilter **62**, coalescer **64** and pressure regulator **66** are superposed above the waste and feed manifold assembly **68** which is, in turn, superposed above the product flow control assembly **72**. Hence, each of the aforedescribed components are arranged in substantially vertical, planar relationship with one another and adjacent the control box back **36**. Therefore, upon removing the control box cover **46**, a repairman requiring access to any of the aforedescribed control box components will view the arrangement of components **30** substantially as shown in FIG. **2** so that access to any desired component therein can be had with relative ease. The flow of gas to the components **30** can be shut off for servicing purposes by means of shutoff valves **86** or **108**.

It will be understood that numerous modifications and substitutions will be had to the aforedescribed embodiment without departing from the spirit of the invention. For example, although the product manifold assembly **70** of the aforedescribed separator **20** has been shown and described as including a pair of equalization valves **140,142**, a separator in accordance with the present invention may include one such valve wherein the one valve possesses the capacity to effectively control flow in either of two directions therethrough. Accordingly, the aforedescribed embodiment is intended for purposes of illustration and not as limitation.

We claim:

1. In a pressure swing adsorption apparatus including a pair of adsorbers each having an inlet and an outlet and adapted to fractionate at least one constituent from a gaseous mixture delivered from a feed stream by sequentially directing the gaseous mixture from the feed stream into the inlet of one adsorber so that said one adsorber performs adsorption while simultaneously purging the other adsorber of adsorbed constituent with product gas withdrawn from the outlet of the one adsorber and then directing the gaseous mixture from the feed stream into the inlet of the other adsorber so that said other adsorber performs adsorption while simultaneously purging the one adsorber of adsorbed constituent of product gas withdrawn from the outlet of the other adsorber wherein the apparatus includes feed and waste valving means associated with the inlets of the adsorbers to which the gaseous mixture is selectively routed to the inlet of one or the other adsorber for the production of product gas and through which product-depleted waste gas is discharged from the adsorber being purged and a purge loop and equalization valving means associated with the outlets of the adsorbers permitting the adsorbers to communicate with one another through the outlets thereof for the purposes of purging one and then the other of the adsorbers and for equalizing the internal pressure of the adsorbers between preselected stages of adsorber operation, the improvement comprising:

a base;

an elongated control box for housing the feed and waste valving means of the apparatus, said control box being directly mounted upon said base so that its longitudinal axis is oriented generally vertically and including a substantially planar back oriented generally vertically, the valving means of the apparatus are supportedly attached to said planar back in a substantially coplanar and vertical arrangement facilitating service and maintenance of said valving means, and

said pair of adsorbers include a pair of towers directly mounted upon said base and oriented in a generally vertical, side-by-side arrangement and positioned in such a relationship with the control box so that the back panel of the control box is positioned adjacent and so as to span the width of the adsorber towers, the towers and the control box being attached to one another so that the vertical stability of each of the towers and control box contributes to the vertical stability of each of the other of the towers and control box.

2. The improvement of claim **1** wherein at least one of said valving means is superposed above another of said valving means.

3. The improvement of claim **1** further comprising automatic control means for automatically controlling the operation of said feed valving means, equalization valving means and waste valving means, said automatic control means including controls which are superposed generally above each of the feed valving means, equalization valving means and waste valving means to facilitate servicing and maintenancing of said controls.

4. A pressure swing adsorption apparatus for fractionating at least one constituent from a gaseous mixture, said apparatus comprising:

a base;

a pair of adsorbers each having an inlet and an outlet and adapted to adsorb a preselected constituent from a gaseous mixture delivered from a feed stream and routed from the inlet to the outlet thereof and adapted to desorb the adsorbed constituent and thus undergo regeneration when purged by gaseous product exiting the outlet of the other adsorber and routed from the outlet to the inlet thereof, said pair of adsorbers including a pair of towers directly mounted upon said base and oriented generally vertically and in a side-by-side arrangement;

feed valving means operatively connected between the inlets of the adsorber and the feed stream for directing gaseous mixture from the feed stream into the inlet of one and the other adsorber in an alternating fashion so that only one adsorber at a time performs adsorption and produces product gas;

a purge loop connected between the outlets of the adsorbers for permitting product gas exiting the outlet of the adsorber performing adsorption to enter the outlet of the other adsorber for purging the other adsorber of adsorbed constituent and so that while one adsorber performs adsorption, the other adsorber undergoes regeneration;

equalization valving means connected between the outlets of the adsorbers for equalizing the internal pressures of the adsorbers between preselected stages of apparatus operation;

waste valving means associated with the outlets of the of the adsorbers through which productdepleted waste gas discharged from the inlet of the adsorber undergoing regeneration is rejected; and

an elongated control box for housing the feed valving means, the equalization valving means and the waste valving means of the apparatus, said control box being directly mounted upon said base so that its longitudinal axis is oriented substantially vertically and including a substantially planar back oriented generally vertically, said pair of adsorber towers being positioned upon said base adjacent the control box so that the back thereof is positioned in relatively close proximity to and spans the width of both towers, the feed valving means, the equalization valving means and the waste valving means being supportedly attached in a single vertical plane to the planar back of the control box so as to facilitate service and maintenance of the apparatus, said control box and the adsorber towers being attached to one another so that the vertical stability of each of the towers and control box contributes to the vertical stability of each of the other of the towers and the control box.

5. The apparatus as defined in claim 4 wherein at least one of the feed, equalization and waste valving means is superposed above another of the feed, equalization and waste valving means.

6. The apparatus as defined in claim 4 wherein the feed valving means includes a pair of feed valves and the waste valving means includes a pair of waste valves, said waste valves being arranged generally in a side-by-side relationship and said feed valves are positioned generally outboard of the side-by-side arrangement of waste valves.

7. The apparatus as defined in claim 4 wherein the waste valving means includes a pair of feed valves arranged in a generally side-by-side relationship and said equalization valving means is disposed generally beneath the side-by-side arrangement of waste valves.

8. The apparatus as defined in claim 4 further comprising automatic control means for automatically controlling the operation of said feed valving means, equalization valving means and waste valving means, said automatic control means including controls which are superposed generally above each of the feed valving means, equalization valving means and waste valving means to facilitate servicing and maintenancing of said controls.

9. An air separator for separating at least one constituent element from air delivered from an air source, said separator comprising:

a base;

a pair of adsorbers each including a pair of towers and a bed of adsorbent material adapted to adsorb a preselected constituent from air delivered from a source and adapted to desorb the adsorbed constituent and thus undergo regeneration when purged by product gas produced by the other adsorber, each adsorber having an inlet and outlet accommodating a flow of air or product gas therebetween, said adsorber towers being directly mounted upon said base and oriented generally vertically and in a side-by-side relationship;

an elongated control box being directly mounted upon said base so that the longitudinal axis of the control box is oriented generally vertically, and including a planar back oriented substantially vertically;

feed valving means operatively associated with the inlets of the adsorber and the air source for directing air from the source into the inlet of one and the other adsorber in an alternating fashion so that only one adsorber at a time performs adsorption and produces product gas;

a purge loop connected between the outlet of the adsorber permitting product gas exiting the outlet of the adsorber performing adsorption to enter the outlet of the other adsorber for purging the other adsorber of adsorbed constituent and so that while one adsorber performs adsorption, the other adsorber undergoes regeneration;

equalization valving means associated between the outlets of the adsorbers for equalizing the internal pressures of the adsorbers between preselected stages of apparatus operations; and

waste valving means associated with the outlets of the adsorbers through which product-depleted waste gas discharged from the inlet of the adsorbers undergoing regeneration is rejected, said feed valving means, equalization valving means and waste valving means being supportedly attached to the planar back of said control box so as to be disposed in generally a planar and vertical arrangement thereagainst so that servicing and maintenance of said feed valving means, equalization valving means and waste valving means is facilitated, said control box being disposed relative to said towers so that the planar back is proximate to and generally spans the width of both adsorber towers, said control box and towers being attached to one another so that the vertical stability of each of the towers and control box upon the base con-

tributes to the vertical stability of each of the other of the towers and control box.

10. The air separator of claim **9** wherein at least one of the feed, equalization and waste valving means is superposed above another of the feed, equalization and waste valving means.

11. The air separator of claim **9** wherein the feed valving means includes a pair of feed valves and the waste valving means includes a pair of waste valves, said waste valves being arranged generally in a side-by-side relationship and said feed valves are positioned generally outboard of the side-by-side arrangement of waste valves.

12. The air separator of claim **9** wherein the waste valving means includes a pair of feed valves arranged in a generally side-by-side relationship and said equalization valving means is disposed generally beneath the side-by-side arrangement of waste valves.

13. The air separator of claim **9** further including filtering componentry operatively connected upstream of the feed valving means for filtering source air and said filtering componentry is supportedly mounted within the control box in the plane of the generally planar arrangement of said feed, equalization and waste valving means.

14. The air separator of claim **9** further including a pressure regulator operatively connected upstream of the feed valving means for regulating the pressure of source air delivered to the feed valving means, said pressure regulator being supportedly mounted within the control box in the plane of the generally planar arrangement of said feed, equalization and waste valving means.

15. The air separator of claim **9** further including a product flow controller operatively connected downstream of the adsorber outlets for controlling the flow of product gas from said separator, said product flow controller being mounted within the control box in the plane of the generally planar arrangement of said feed, equalization and waste valving means.

16. The air separator of claim **9** further including automatic control means for automatically controlling the operation of said feed valving means, equalization valving means and waste valving means, said automatic control means including controls which are superposed generally above each of the feed valving means, equalization valving means and waste valving means to facilitate servicing and maintenancing of said controls.

* * * * *