US005578115A

United States Patent [19]

Cole

[11] **Patent Number: 5,578,115**

[45] **Date of Patent: Nov. 26, 1996**

[54] **MOLECULAR SIEVE CONTAINER FOR OXYGEN CONCENTRATOR**

[75] Inventor: **Mark A. Cole**, Somerset, Pa.

[73] Assignee: **DeVilbiss Health Care, Inc.**, Somerset, Pa.

[21] Appl. No.: **505,876**

[22] Filed: **Jul. 24, 1995**

[51] **Int. Cl.**[6] **B01D 53/053**

[52] **U.S. Cl.** **96/121**; 96/130; 96/143; 96/151

[58] **Field of Search** 96/121–133, 143–146, 96/151, 108, 109

[56] **References Cited**

U.S. PATENT DOCUMENTS

1,593,137	7/1926	O'Rourke et al.	96/131
2,101,555	12/1937	Moore et al.	96/127 X
3,186,148	6/1965	Merrill et al.	96/131
3,324,631	6/1967	Kreuter	96/130 X
4,559,065	12/1985	Null et al.	96/126 X
4,822,384	4/1989	Kato et al.	55/158
4,925,464	5/1990	Rabenau et al.	55/179
5,112,367	5/1992	Hill	55/26
5,268,021	12/1993	Hill et al.	95/98

FOREIGN PATENT DOCUMENTS

2550466	2/1985	France	96/133
0288531	4/1991	Germany	96/130
4-122411	4/1992	Japan	96/130
0425621	3/1935	United Kingdom	96/126
2232364	12/1990	United Kingdom	96/133

Primary Examiner—Robert Spitzer
Attorney, Agent, or Firm—MacMillan, Sobanski & Todd

[57] **ABSTRACT**

A container for a plurality of molecular sieve beds for use in a pressure swing oxygen concentrator. An extrusion defines at least two and preferably at least three passages extending between open ends of the extrusion. The extrusion ends are closed by first and second end caps secured to the extrusion. Two of the passages form separate molecular sieve containers and a third passage may form an accumulator for storing concentrated oxygen. In a preferred embodiment, the first end cap has separate inlet ports for each molecular sieve container and an outlet port for the accumulator. The second end cap has separate outlet ports for each molecular sieve container and an inlet port for the accumulator. Optionally, the second end cap may include a restricted passage allowing a limited oxygen flow between the outlet ports from the molecular sieve containers and the second end cap may include check valves and passages which allow pressurized oxygen to flow from each molecular sieve container outlet port to the accumulator inlet port. The first end cap may include a feed gas port and an exhaust gas port connected through a flow control valve to the molecular sieve container inlet ports.

17 Claims, 6 Drawing Sheets

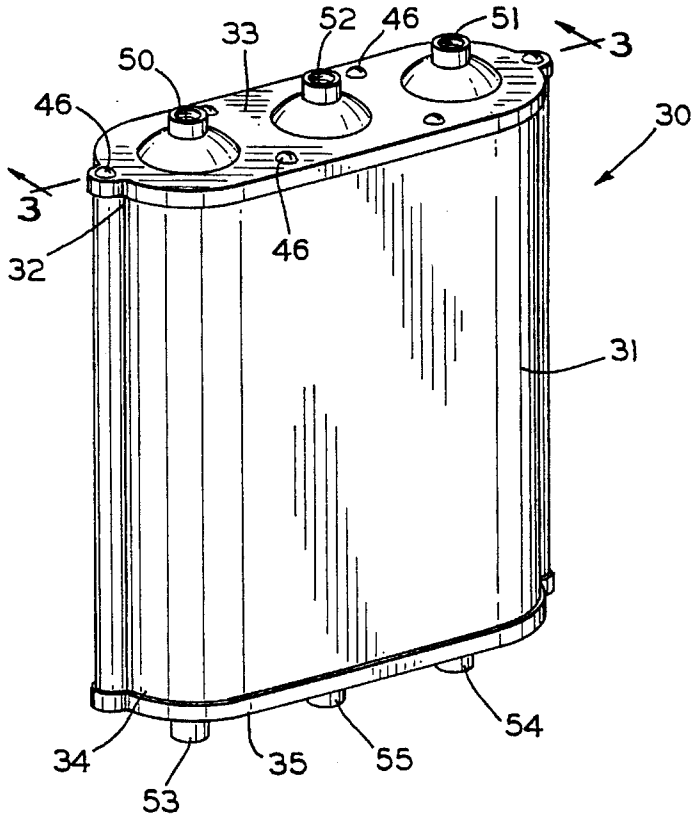

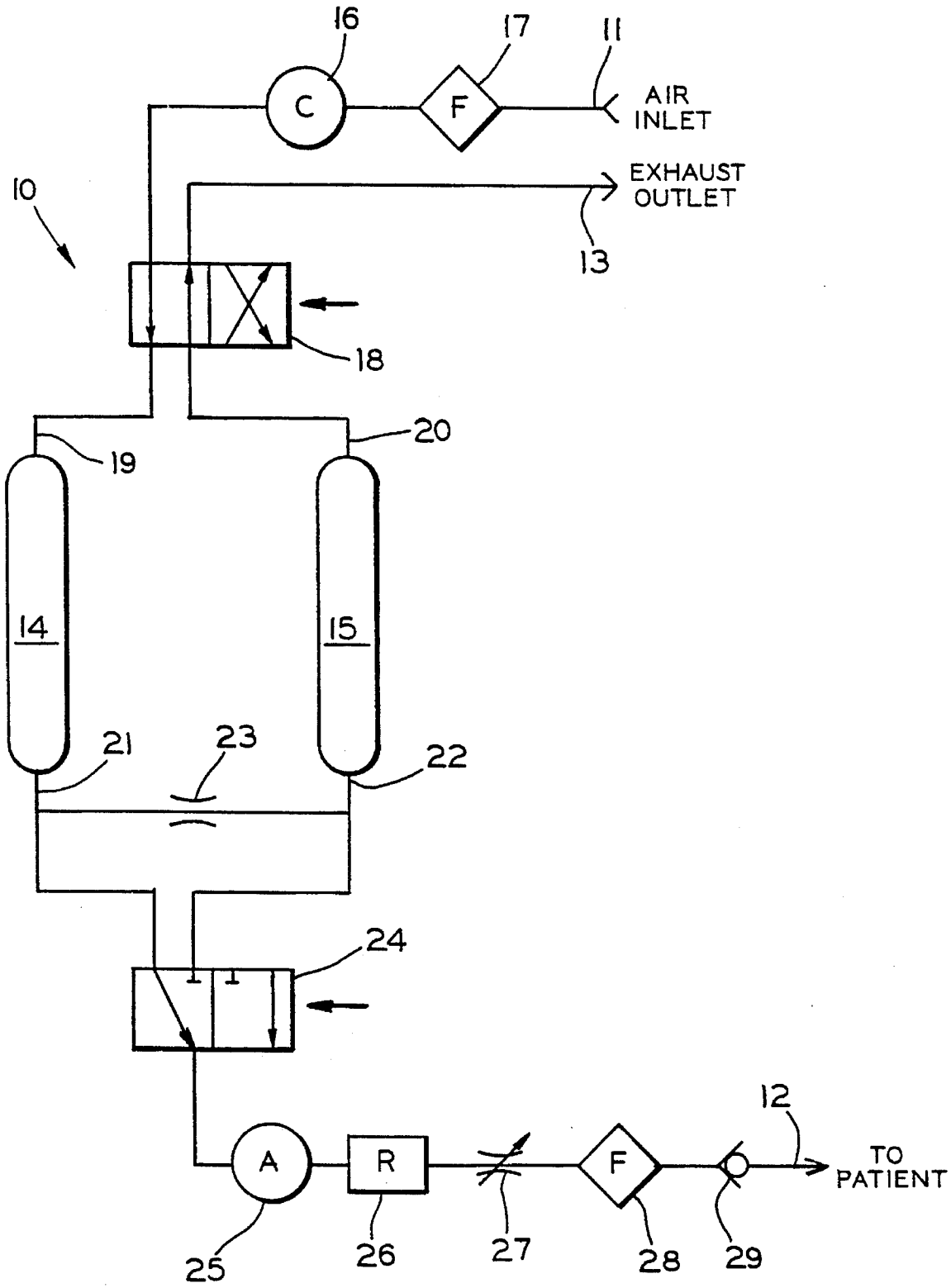

FIG. 1
(PRIOR ART)

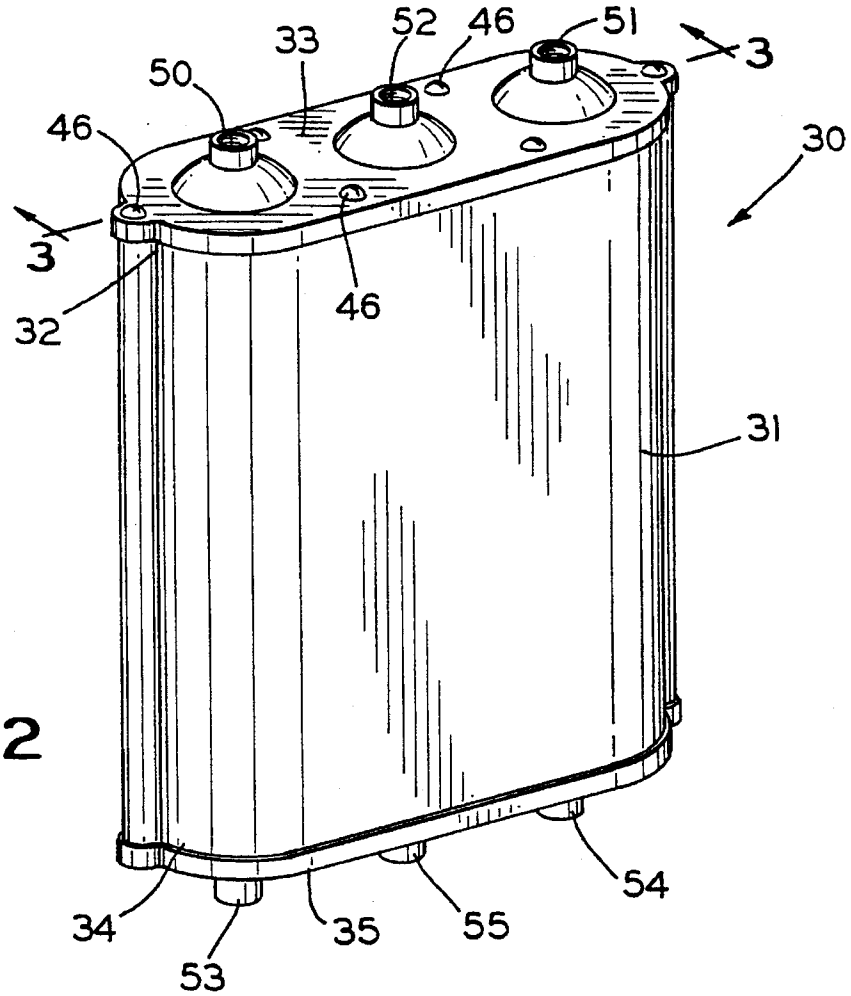
33
52
46
51
3
50
46
30
3
32
46
31
54
34
35
55
53

FIG. 2

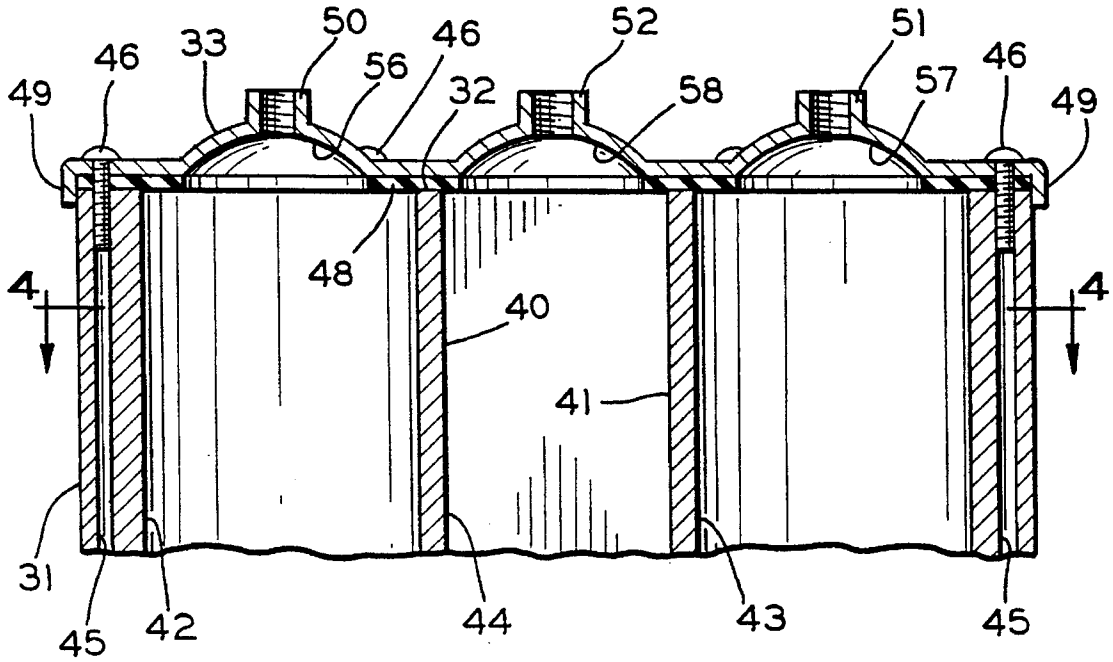
50
46
52
51
46
33
56
32
58
57
46
49
49
48
4
4
40
41
31
45
42
44
43
45

FIG. 3

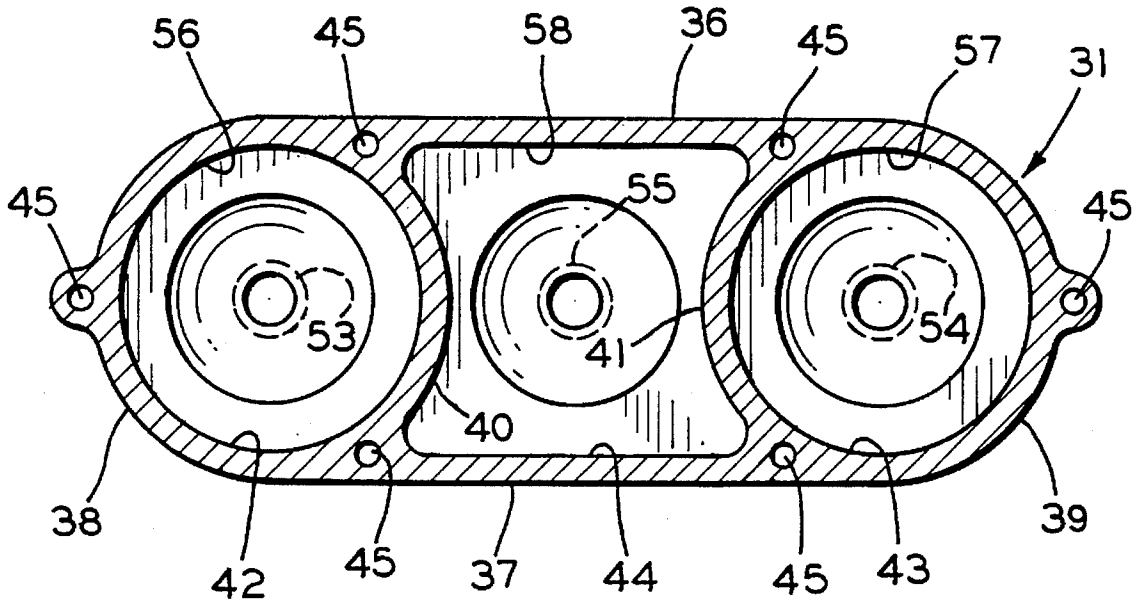

FIG. 4

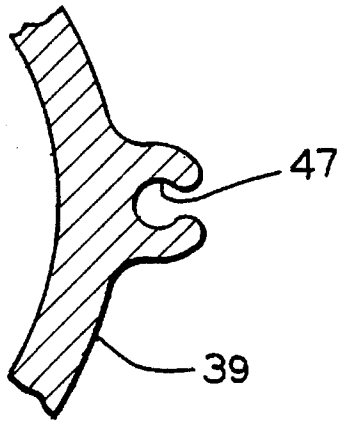

FIG. 5

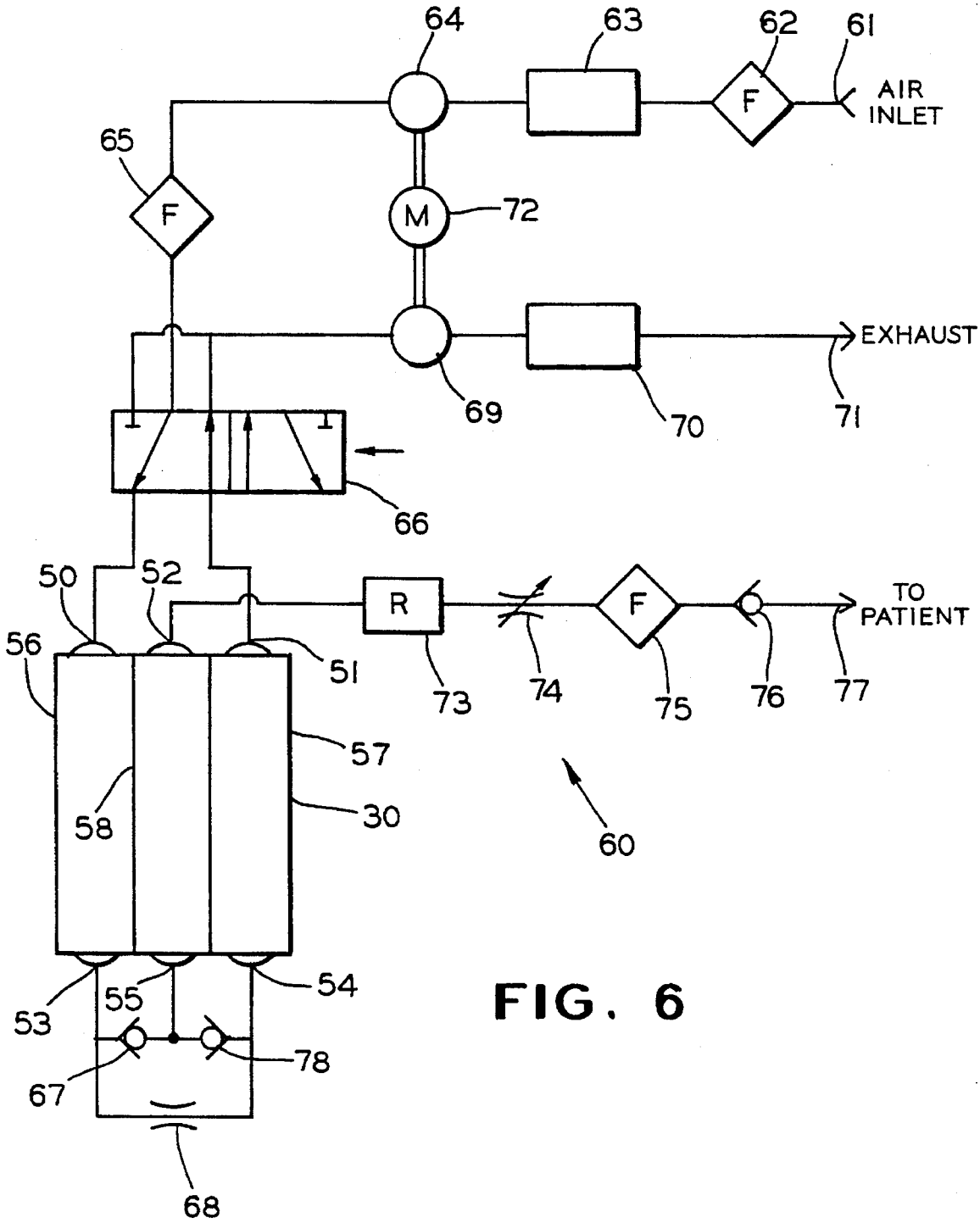
64
63
62
61
AIR INLET
F
65
F
M
72
EXHAUST
69
70
71
66
50
52
R
F
TO PATIENT
56
51
73
74
75
76
77
57
58
30
60
53
55
54
78
67
68

FIG. 6

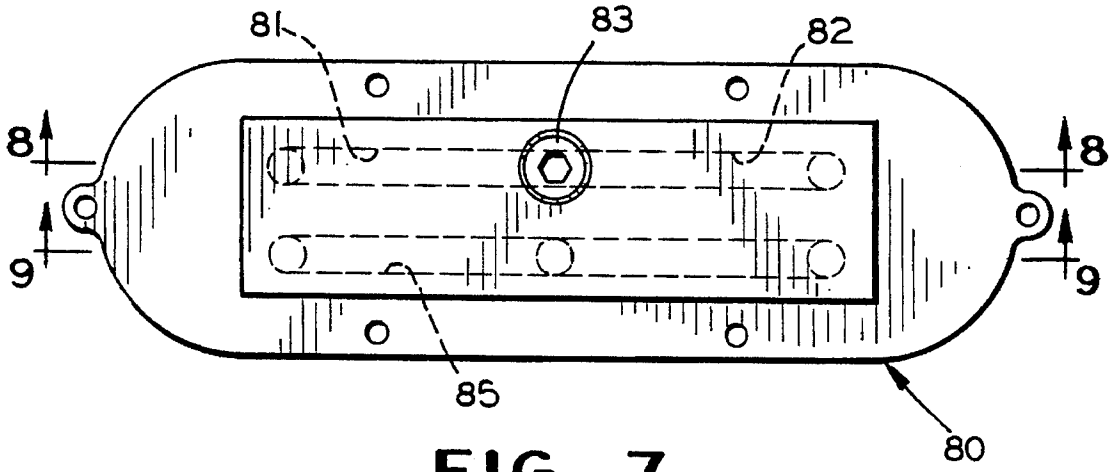

FIG. 7

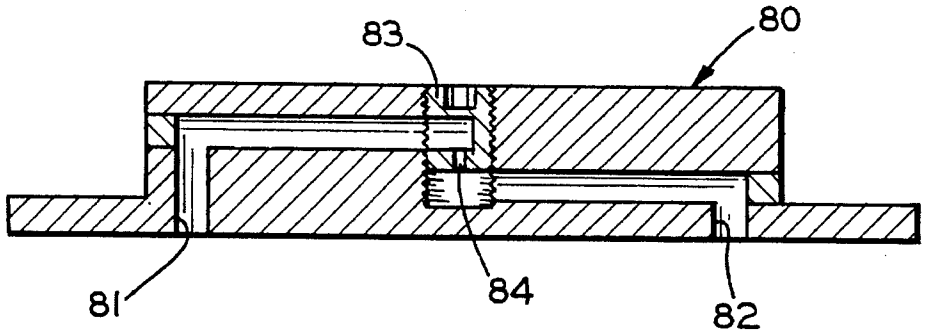

FIG. 8

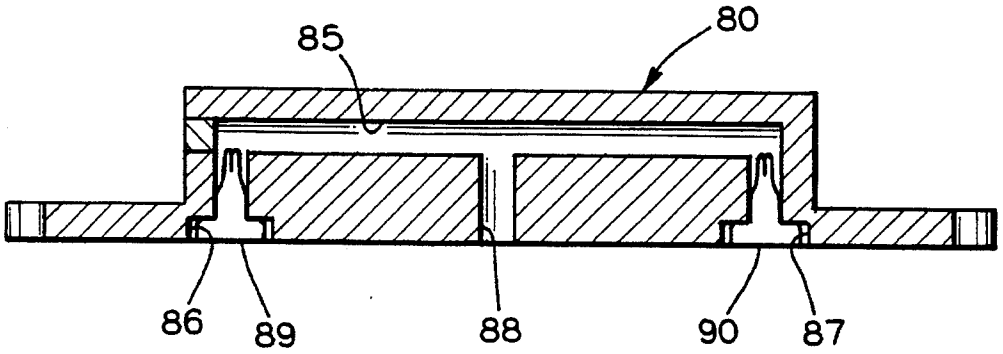

FIG. 9

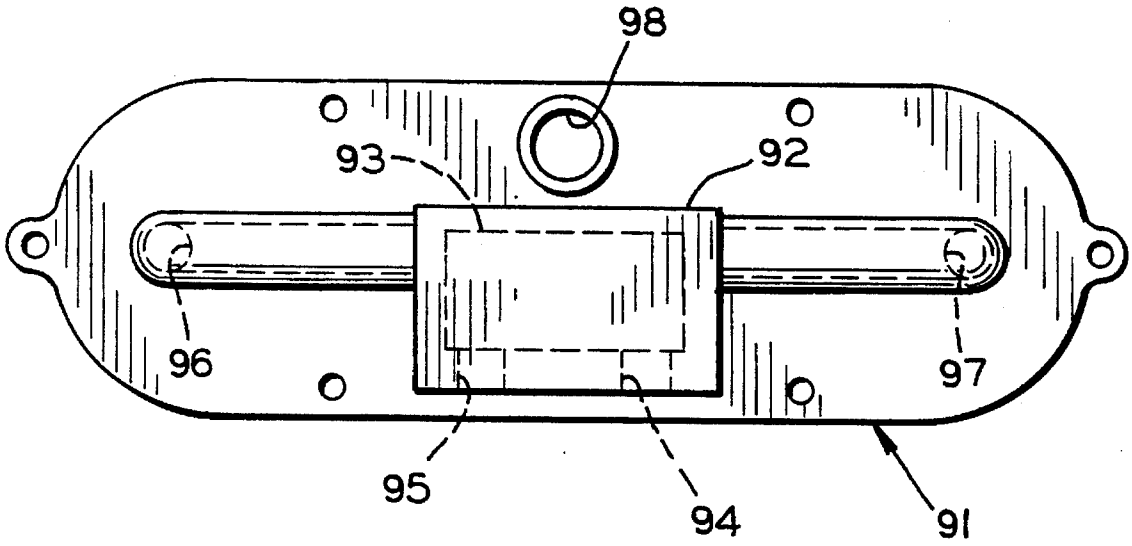

FIG. 10

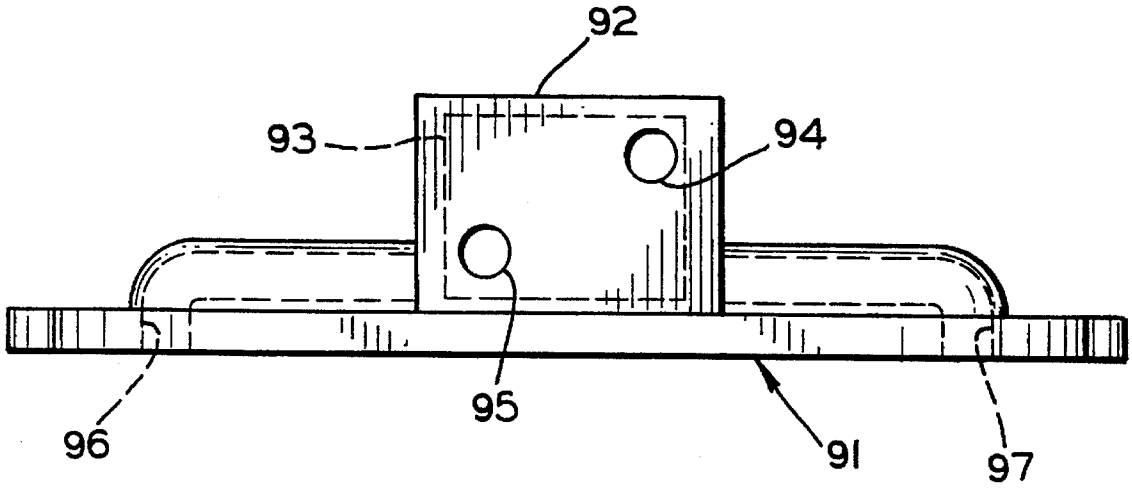

FIG. 11

MOLECULAR SIEVE CONTAINER FOR OXYGEN CONCENTRATOR

TECHNICAL FIELD

The invention relates to pressure swing molecular sieve oxygen concentrators and more particularly to a container for a plurality of molecular sieve beds for use in a pressure swing oxygen concentrator.

BACKGROUND ART

Oxygen concentrators are used, for example, as a source of high purity oxygen for medical applications. An oxygen concentrator will separate air into two gas streams, one of which consists primarily of oxygen and the other of which consists primarily of nitrogen. A pressure swing molecular sieve oxygen concentrator typically has at least two molecular sieve beds. Each molecular sieve bed typically consists of a closed cylindrical container partially filled with a sieve material, such as zeolite, which will pass a flow of oxygen molecules while blocking the flow of larger nitrogen molecules. In operation, a compressor applies filtered pressurized air through a flow control valve to an inlet port on one of the molecular sieve beds and about 95% pure oxygen flows under pressure from an outlet port on such bed. The oxygen may flow to an accumulator and then pass through a pressure regulator, an optional flow meter and a final filter to a patient. As oxygen flows through the sieve bed, the separated nitrogen is retained in the sieve bed. After a short time, one or more valves are changed to apply the pressurized air to the inlet port of a second sieve bed and to vent the inlet port of the first sieve bed. A small portion of the pressurized oxygen output from the second sieve bed is delivered to the outlet port of the first sieve bed to purge nitrogen and any other trapped gases from the first sieve bed. The valves are periodically reversed to alternate the sieve beds between the gas separating cycle and the trapped gas purging cycle. The optional accumulator holds a volume of concentrated oxygen under pressure to provide a continuous oxygen flow when the valves are cycled.

In prior art oxygen concentrators, the molecular sieve beds are constructed as individual components which typically each includes a cylindrical container. The accumulator is still a third container. A typical oxygen concentrator uses at least two molecular sieve beds which must be connected together and connected to valves either with tubing and fittings or with manifolds. The number of fittings and connections for handling the pressurized air feed gas and the pressurized oxygen outlet gas present a potential for leaks and assembly errors. Further, both the number of parts required and the time required for assembly can adversely affect the reliability and the manufacturing cost of prior art oxygen concentrators.

DISCLOSURE OF INVENTION

The present invention is directed to an improved container for a plurality of molecular sieves for use in a pressure swing oxygen concentrator. At least two molecular sieve beds are formed as a unit with a single extruded container. Preferably, the extrusion has three cavities. The extrusion is cut to a desired length to provide a desired capacity to the sieve beds and end caps are secured to the extrusion with screws and resilient seals. Each of the cavities is closed by the end caps. Two of the closed cavities form molecular sieve containers which are partially filled with a conventional molecular sieve material, such as a suitable zeolite. the third cavity

serves as an accumulator for receiving and storing the concentrated oxygen from the molecular sieve containers.

Each end cap may have separate threaded openings connecting into each cavity for connecting suitable fittings and hoses as in a conventional oxygen concentrator. Or, preferably, a lower one of the end caps may include passages with check valves connecting outlet ports from the two sieve containers to tile accumulator and a passage having an orifice or restriction interconnecting the outlet ports of the two sieve containers. An upper one of the end caps may be adapted to mount the flow control valve. The upper end cap can from a manifold and include air passages for the valve to direct the proper air flow to and from the sieve beds. The upper end cap also may include two threaded ports for tile feed and exhaust gas to be hooked to the compressor.

Accordingly, it is an object of the invention to provide an improved low cost construction for containers for molecular sieve beds for use with a pressure swing oxygen concentrator.

Other objects and advantages of the invention will become apparent from the following detailed description of the invention and the accompanying drawings.

BRIEF DESCRIPTION OF THE DRAWINGS

FIG. **1** is a schematic diagram illustrating the pneumatic circuit of an exemplary prior an pressure swing oxygen concentrator;

FIG. **2** is a perspective view of a molecular sieve container according to a preferred embodiment of the invention;

FIG. **3** is a fragmentary cross sectional view through the molecular sieve container as taken along line **3—3** of FIG. **2**;

FIG. **4** is a cross sectional view through the molecular sieve container as taken along line **4—4** of FIG. **3**;

FIG. **5** is an enlarged fragmentary cross sectional view through an end of a modified extruded molecular sieve container;

FIG. **6** is a schematic diagram of a pressure swing oxygen concentrator with the molecular sieve container of FIG. **2**;

FIG. **7** is a bottom plan view of a lower end cap for an extruded molecular sieve container according to a modified embodiment of the invention;

FIG. **8** is a cross sectional view as taken along line **8—8** of FIG. **7**;

FIG. **9** is a cross sectional view as taken along line **9—9** of FIG. **7**;

FIG. **10** is a top plan view of an upper end cap for an extruded molecular sieve contains according to a modified embodiment of the invention; and

FIG. **11** is a side elevational view of the upper end cap of FIG. **10**.

BEST MODE FOR CARRYING OUT THE INVENTION

Referring to FIG. **1** of the drawings, a pneumatic diagram is shown for a typical prior art pressure swing oxygen concentrator **10**. The oxygen concentrator **10** has an air inlet **11**, a pressurized concentrated oxygen outlet **12** for delivering oxygen to a patient, and an exhaust gas outlet **13**. A gas consisting primarily of nitrogen is separated from a gas consisting primarily of oxygen in two molecular sieve beds **14** and **15**. Each molecular sieve bed is partially filled with a suitable filter material, such as a zeolite, which will pass

oxygen molecules while blocking the flow of larger nitrogen molecules. A compressor **16** draws ambient air through a filter **17** and delivers pressurized air through a valve **18** alternately to the molecular sieve beds **14** and **15**. The valve **18** has two positions. In the illustrated position, the valve **18** connects the compressor **16** to apply pressurized air to an inlet port **19** to the molecular sieve **14** and connects an inlet port **20** to the molecular sieve **15** to the exhaust gas outlet **13**. In the second position, the valve **18** connects the compressor **16** to apply pressurized air to the inlet port **20** to the molecular sieve **15** and connects the inlet port **19** of the molecular sieve bed **14** to the exhaust gas outlet **13**.

The molecular sieve beds **14** and **15** have outlet ports **21** and **22**, respectively. The outlet ports **21** and **22** are connected together through a calibrated orifice **23** to permit a limited flow of concentrated oxygen from the higher pressure one of the molecular sieve beds **14** and **15** to the lower pressure molecular sieve bed **15** or **14**. A two position valve **24** may be provided to selectively connect one of the molecular sieve outlet ports **21** or **22** to a concentrated oxygen accumulator **25**. From the accumulator **25** concentrated oxygen flows through a pressure regulator **26**, a flow meter **27**, a filter **28** and a check valve **29** to the outlet **12**.

In operation, the valves **18** and **24** are operated together and may initially be positioned as illustrated with the pressurized air from the compressor **16** applied to the inlet port **19** of the molecular sieve bed **14** and the outlet port **21** of the molecular sieve bed **14** connected to the accumulator. The inlet port **20** to the molecular sieve bed **15** is connected to the exhaust gas outlet **13**. As pressurized air is delivered to the molecular sieve bed **14**, concentrated oxygen flows from the outlet port **21** to the accumulator **25**. A small portion of the concentrated oxygen at the port **21** also flows through the orifice **23** and in a reverse direction through the molecular sieve bed **15** to the exhaust gas outlet **13** to purge nitrogen from the molecular sieve bed **15**. As concentrated oxygen is discharged from the molecular sieve **14**, nitrogen is retained in the molecular sieve bed **14**. After a short period of time, both valves **18** and **24** are simultaneously shifted (to the left in FIG. **1**). This reverses the cycle and the molecular sieve bed **15** begins separating a flow of concentrated oxygen and retaining the nitrogen, while nitrogen is purged from the molecular sieve bed **14**.

Referring now to FIGS. **2–4** of the drawings, a molecular sieve unit **30** is shown according to a preferred embodiment of the invention. An extrusion **31** forms a main body portion of the unit **30**. The extrusion **31** has an upper end **32** which is closed by an upper or first end cap **33** and has a lower end **34** which is closed by a lower or second end cap **35**. The illustrated extrusion **31** is a right cylinder which has an exterior shape in section of flat sides **36** and **37** and rounded ends **38** and **39**, as shown in FIG. **4**. The extrusion **31** is hollow and is divided by webs **40** and **41** into three cavities **42–44** which extend the length of the extrusion. A plurality of small diameter passages **45** are formed in the extrusion **31** for receiving screws **46** to secure the end caps **33** and **35**. The passages **45** may be closed, as shown in FIG. **4**, or they may be open grooves **47**, as shown in FIG. **5**. In attaching the end caps **33** and **35**, resilient seals **48** are positioned between the end cap **33** and the extrusion end **32** and between the end cap **35** and the extrusion end **34**. Preferably, the end caps **33** and **35** have lips **49** which extend around the perimeter of the seals **48** and over the ends **32** and **34**, respectively, of the extrusion **31**. The lips **49** position the seals **48** and also prevent the seals **48** from extruding outwardly. Three threaded nipples **50–52** are formed in the upper end cap **33** for communicating, respectively, with the cavities **42–44**. Similarly, three threaded nipples **53–55** are formed in the lower end cap **35** for communicating, respectively, with the cavities **42–44**.

The closed cavity **42** forms a container **56** for a first molecular sieve bed and the nipples **50** and **53** define inlet and outlet ports, respectively, on opposite ends of the container **56**. The closed cavity **43** forms a container **57** for a second molecular sieve bed and the nipples **51** and **54** define inlet and outlet ports, respectively, on opposite ends of the container **57**. The closed cavity **44** forms a container **58** which functions as an accumulator for storing concentrated oxygen received from the molecular sieve bed containers **56** and **57**. One of the nipples **52** and **55** serves as an inlet port and the other nipple **55** or **52** serves as an outlet port for the accumulator container **58**. If desired, it will be appreciated that the nipples **52** and **55** for the accumulator container **58** both may be formed either on the upper end cap **33** or on the lower end cap **35**. Or, a single nipple on either of the end caps **33** or **35** may serve both as an inlet port and as an outlet port for the pressurized oxygen stored in the accumulator container **58**. For the molecular sieve containers **56** and **57**, the feed gas normally flows downwardly through a filter material during gas separation. Consequently, the inlet ports normally will be on the upper cover **32** and the outlet ports will normally be on the lower cover. However, additional passages (not shown) may be easily formed to extend the length of the extrusion **31** and that such passages may be used to locate all of the ports on one of the end caps **33** or **35**.

It should be appreciated that the extrusion **31** can be extruded to an indefinite length, with the length being limited only by the capacity to handle a long extrusion. In manufacturing the molecular sieve unit **30**, the extrusion **31** is cut into the length needed to give a desired volumetric capacity to the containers **56–58**. The same extrusion **31** may be used in manufacturing molecular sieve units **30** for different capacity oxygen concentrators merely by changing the length of the extrusion **31**.

During use, the molecular sieve containers **56** and **57** are partially filled with a commercially available molecular sieve material that will pass a flow of oxygen while blocking a flow of nitrogen. After extensive use, it may be necessary to replace the molecular sieve material. The molecular sieve unit **30** is easily serviced by merely removing the upper end cap **33** and replacing the molecular sieve material in the cavities **42** and **43**. In some prior art molecular sieve beds, assembly screw holes could become worn or damaged sufficiently that the sieve beds could not be serviced. This problem is eliminated by forming the screw passages **45** the length of the extrusion **31**. The ends of the passages **45** may be threaded for receiving machine screws or self tapping screws **46** may be used to secure the end caps **33** and **35**. If the threads or the ends of the passages **45** become worn, the extrusion **31** can continue to be used and serviced merely by using longer screws.

FIG. **6** is a pneumatic diagram of an oxygen concentrator **60** incorporating the molecular sieve unit **30**. An ambient air inlet **61** is connected through a first filter **62** and through an optional muffler **63** to the inlet to a compressor **64**. The compressor **64** applies pressurized air through a second filter **65** to a two position valve **66**. In the illustrated position, the valve **66** applies the filtered pressurized air to the inlet port **50** of the molecular sieve container **56**. The concentrated oxygen flows from the outlet port **53** of the molecular sieve container **56** through a check valve **67** to the inlet port **55** to the accumulator **58**.

While oxygen is being concentrated in the molecular sieve container **56**, nitrogen is purged from the molecular

sieve container **57**. The outlet port **53** also is connected through a small orifice **68** to deliver a low flow of oxygen to the outlet port **54** of the molecular sieve container **57** for purging nitrogen from the container **57**. The inlet port **51** of the molecular sieve container **57** is connected through the valve **66** to an optional suction pump **69** and then through an exhaust muffler **70** of an exhaust gas outlet **71**. A single motor **72** may operate both the compressor **64** and the optional suction pump **69**. The suction pump **69** functions to reduce the pressure in the molecular sieve container **57** during the purge cycle to increase the purge efficiency.

The concentrated oxygen at the outlet port **52** from the accumulator **58** flows through a pressure regulator **73**, through a flow meter **74**, through a final filter **75** and finally through a check valve **76** to a concentrated oxygen outlet **77**. The outlet **77** may be connected, for example, through a suitable hose to a cannula for supplying supplemental oxygen to a patient's respiratory system.

As the molecular sieve container **56** becomes saturated with nitrogen, the oxygen flow at the outlet port **53** will decrease. Periodically, the position of the valve **66** is changed to alternate the operation of the molecular sieve containers **56** and **57** between gas separation and nitrogen purge cycles. When the position of the valve **66** is changed from the illustrated position, the filtered pressurized feed air will be applied to the inlet port **51** to the molecular sieve container **57**. The outlet port **54** from the container **57** is connected through a check valve **78** to the accumulator inlet port **55** and through the orifice **68** to the outlet port of the molecular sieve container **56**. The valve **66** also connects the inlet port **50** to the molecular sieve container **56** to the suction port of the pump **69** for drawing nitrogen and any other retained gases from the molecular sieve container **56**.

FIGS. **7–9** show a modified lower end cap **80** suitable for use with the extrusion **31** for forming a molecular sieve container. Connections between two molecular sieves and an accumulator are formed as an integral part of the lower end cap **80**. Two passages **81** and **82** form ports to the two molecular sieves which are separated by a plug **83** having a calibrated orifice **84** which interconnects the passages **81** and **82**. A third passage **85** has ends **86** and **87** which are located to communicate with the two molecular sieves and an extension **88** which is located to communicate with the accumulator. Resilient duck bill check valves **89** and **90** are positioned, respectively, in the passage ends **86** and **87**. The orifice **84** functions identical to the orifice **68** in FIG. **6** and the check valves **89** and **90** function as the check valves **67** and **78** in FIG. **6**. It will be seen that the lower end cap **80** is a simplified unitary construction which incorporates the passages, valves and orifice in the portion of the circuit illustrated by the lower connections to the molecular sieve unit **30** in FIG. **6**.

FIGS. **10** and **11** show a modified upper end cap **91** suitable for use with the extrusion **31** for forming a molecular sieve container. The upper end cap **91** includes an integral housing **92** for mounting a two position valve **93** which may be similar to the valve **66** in the pneumatic circuit of FIG. **6**. A pressurized air inlet port **94** and an exhaust gas outlet port **95** are formed in the housing **92**. An inlet port **96** is located to communicate with one of the molecular sieves in the extrusion **31**, an inlet port **97** is located to communicate with the other molecular sieve and a concentrated oxygen outlet port **98** is located to communicate with the accumulator in the extrusion **31**. It will be appreciated that use of the illustrated lower end cap **80** and upper end cap **91** with the extrusion **31** simplify the construction of a molecular sieve container for an oxygen concentrator and can greatly reduce the risk of assembly error for the pneumatic connections to the molecular sieves in an oxygen concentrator.

It will be appreciated that various modifications and changes may be made to the above described preferred embodiment of a molecular sieve container for an oxygen concentrator without departing from the spirit and the scope of the following claims. Although the preferred container includes two molecular sieve beds and a concentrated oxygen accumulator, it will be appreciated that the accumulator may be eliminated and that two or more molecular sieve beds may be formed as a unit. It will further be appreciated that when the extrusion forms three or more molecular sieve beds, the molecular sieve beds can be cycled between gas separation and gas purge cycles with known flow controllers.

I claim:

1. A molecular sieve container for an oxygen concentrator comprising an elongated extrusion having first and second open ends and at least two cavities extending between said ends, said cavities each having an open first end at said first extrusion end and an open second end at said second extrusion end, a first end cap secured to said first extrusion end to close said first ends of said cavities, a second end cap secured to said second extrusion end to close said second ends of said cavities, wherein at least two of said cavities define first and second containers for separate molecular sieves, and means in said end caps forming inlet and outlet ports for each molecular sieve container.

2. A molecular sieve container, as set forth in claim **1**, and wherein said means in said end caps forming inlet and outlet ports for each molecular sieve container includes means in said first end cap forming a separate inlet port for each molecular sieve container, and means in said second end cap forming a separate outlet port for each molecular sieve container.

3. A molecular sieve container, as set forth in claim **2**, and wherein each end cap has a separate threaded opening connecting to each molecular sieve, said threaded opening in said first end cap connecting with each molecular sieve container defining the inlet port to such container and said threaded opening in said second end cap connecting with each molecular sieve container defines the outlet port from such container.

4. A molecular sieve container, as set forth in claim **3**, and wherein at least three cavities extend between said extrusion ends, wherein one of said cavities defines an accumulator container for receiving and storing concentrated oxygen from said molecular sieve containers, wherein said first end cap has a threaded opening connecting with said accumulator container defining an outlet port, and wherein said second end cap has a threaded opening connecting with said accumulator container defining an inlet port.

5. A molecular sieve container, as set forth in claim **1**, and wherein at least three cavities extend between said extrusion ends, and wherein one of said cavities defines an accumulator container for receiving and storing concentrated oxygen from said molecular sieve containers.

6. A molecular sieve container, as set forth in claim **5**, and wherein said second end cap includes means forming an inlet port to said accumulator container, and wherein said first end cap includes means forming an outlet port from said accumulator container.

7. A molecular sieve container, as set forth in claim **6**, and wherein said second end cap includes means connecting said outlet ports from each of said first and second molecular sieve containers to said inlet port to said accumulator container.

8. A molecular sieve container, as set forth in claim 7, and wherein said connecting means from each of said molecular sieve containers includes check valve means for preventing a flow of gas from said accumulator container back to such molecular sieve container.

9. A molecular sieve container, as set forth in claim 8, and wherein said second end cap further includes a restricted passage means connecting together said outlet ports from said first and second molecular sieve containers for permitting a limited flow of gas from a higher pressure one of said molecular sieve containers to a lower pressure one of said molecular sieve containers.

10. A molecular sieve container, as set forth in claim 9, and wherein said first end cap includes said inlet ports to each molecular sieve container, a feed gas port and an exhaust gas port, valve means mounted to said first end cap, passage means connecting said first and second molecular sieve bed inlet ports, said feed gas port and said exhaust gas port to said valve means, wherein said valve means has a first position in which said feed gas port is connected to said first molecular sieve container inlet port and said exhaust gas port is connected to said second molecular sieve container inlet port, and wherein said valve means has a second position in which said feed gas port is connected to said second molecular sieve container inlet port and said exhaust gas port is connected to said first molecular sieve container inlet port.

11. A molecular sieve container, as set forth in claim 10, and wherein said extrusion has a plurality of passages extending between said first and second extrusion ends, and further including a first plurality of screws engaging said passages to secure said first end cap to said extrusion and a second plurality of screws engaging said passages to secure said second end cap to said extrusion.

12. A molecular sieve container, as set forth in claim 11, and wherein at least some of said plurality of passages have an open side.

13. A molecular sieve container, as set forth in claim 1, and wherein said extrusion has a plurality of passages extending between said first and second extrusion ends, and further including a first plurality of screws engaging said passages to secure said first end cap to said extrusion and a second plurality of screws engaging said passages to secure said second end cap to said extrusion.

14. A molecular sieve container, as set forth in claim 13, and wherein at least some of said plurality of passages have an open side.

15. A molecular sieve container for an oxygen concentrator comprising an elongated extrusion having first and second open ends and at least two cavities extending between said ends, said cavities each having an open first end at said first extrusion end and an open second end at said second extrusion end, a first end cap closing said first ends of said cavities, a second end cap closing said second ends of said cavities, wherein at least two of said cavities define first and second containers for separate molecular sieves, means forming a separate inlet port for each molecular sieve container, and means forming a separate outlet port for each molecular sieve container.

16. A molecular sieve container, as set forth in claim 15, and wherein said extrusion includes a cavity closed by said first and second end caps defining a concentrated gas accumulator, and means forming at least one port into said accumulator.

17. A molecular sieve container, as set forth in claim 16, and wherein said ports are formed in at least one of said first and second end caps.

* * * * *