US006547851B2

(12) **United States Patent**
**Warren**

(10) **Patent No.: US 6,547,851 B2**
(45) **Date of Patent: Apr. 15, 2003**

(54) **MINIATURIZED WEARABLE OXYGEN CONCENTRATOR**

(75) Inventor: **John Lee Warren**, Salmon Arm (CA)

(73) Assignee: **Wearair Oxygen Inc.**, Kelowna (CA)

( * ) Notice: Subject to any disclaimer, the term of this patent is extended or adjusted under 35 U.S.C. 154(b) by 0 days.

(21) Appl. No.: **09/921,863**

(22) Filed: **Aug. 2, 2001**

(65) **Prior Publication Data**

US 2002/0033095 A1 Mar. 21, 2002

**Related U.S. Application Data**

(60) Provisional application No. 60/222,591, filed on Aug. 2, 2000.

(51) **Int. Cl.**[7] ..... **B01D 53/047**

(52) **U.S. Cl.** ..... **95/21**; 95/98; 95/130; 96/114

(58) **Field of Search** ..... 95/11, 19, 21, 95/96, 98, 103, 130; 96/109, 110, 113, 114, 115, 121

(56) **References Cited**

U.S. PATENT DOCUMENTS

| | | | | | |
|---|---|---|---|---|---|
| 2,944,627 | A | | 7/1960 | Skarstrom | 183/4.7 |
| 3,400,713 | A | | 9/1968 | Finan | |
| 4,222,750 | A | * | 9/1980 | Gauthier et al. | 95/102 |
| 4,516,424 | A | * | 5/1985 | Rowland | 73/1.06 |
| 4,685,939 | A | | 8/1987 | Kratz et al. | |
| 4,802,899 | A | * | 2/1989 | Vrana et al. | 96/109 |
| 5,104,426 | A | * | 4/1992 | Yamada et al. | 95/102 |
| 5,122,164 | A | * | 6/1992 | Hirooka et al. | 95/130 |
| 5,340,381 | A | * | 8/1994 | Vorih | 95/105 |
| 5,529,607 | A | * | 6/1996 | Tan | 95/100 |
| 5,531,807 | A | | 7/1996 | McCombs | |
| 5,540,758 | A | * | 7/1996 | Agrawal et al. | 95/101 |
| 5,850,833 | A | | 12/1998 | Kotliar | |
| 5,871,564 | A | | 2/1999 | McCombs | |
| 5,912,426 | A | * | 6/1999 | Smolarek et al. | 96/115 |
| 5,968,233 | A | * | 10/1999 | Rouge et al. | 95/101 |
| 6,003,744 | A | | 12/1999 | Culjak | |
| 6,238,458 | B1 | * | 5/2001 | Monereau | 95/101 |

* cited by examiner

*Primary Examiner*—David A. Simmons
*Assistant Examiner*—Frank M. Lawrence
(74) *Attorney, Agent, or Firm*—Anthony C. Edwards

(57) **ABSTRACT**

A component gas concentrator includes an air compressor, an air-tight first container containing a molecular sieve bed, the first container in fluid communication with the compressor through a first gas conduit, and an air-tight second container in fluid communication with the first container through a second gas conduit. A gas flow controller such as PLC controls actuation of valves mounted to the gas conduits.

**30 Claims, 15 Drawing Sheets**

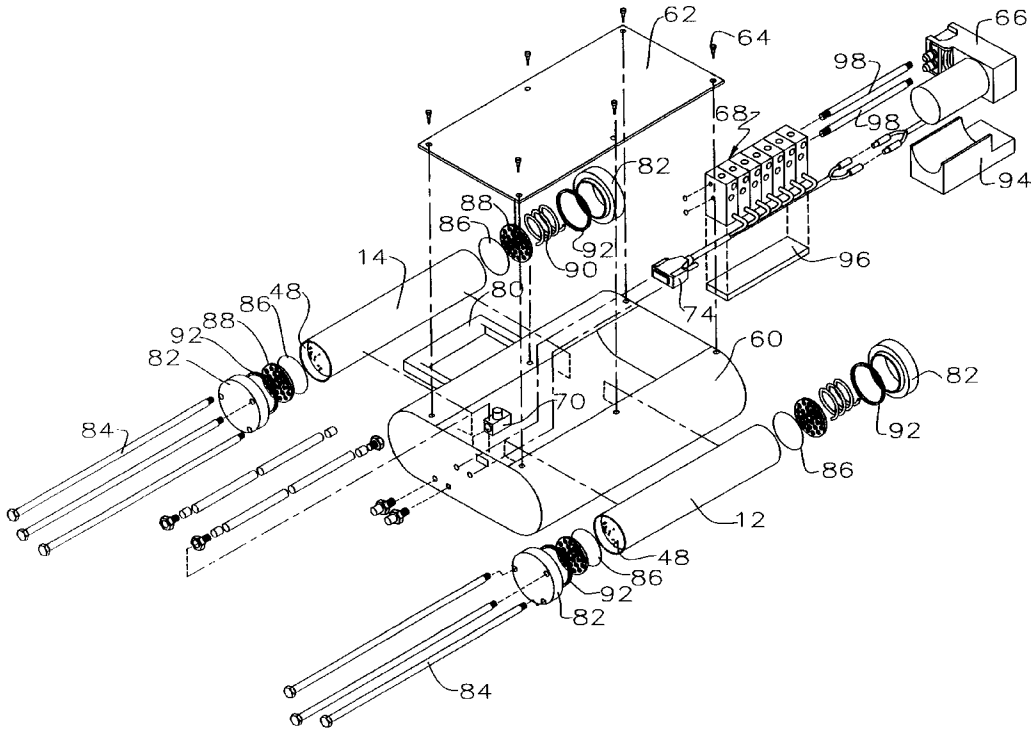

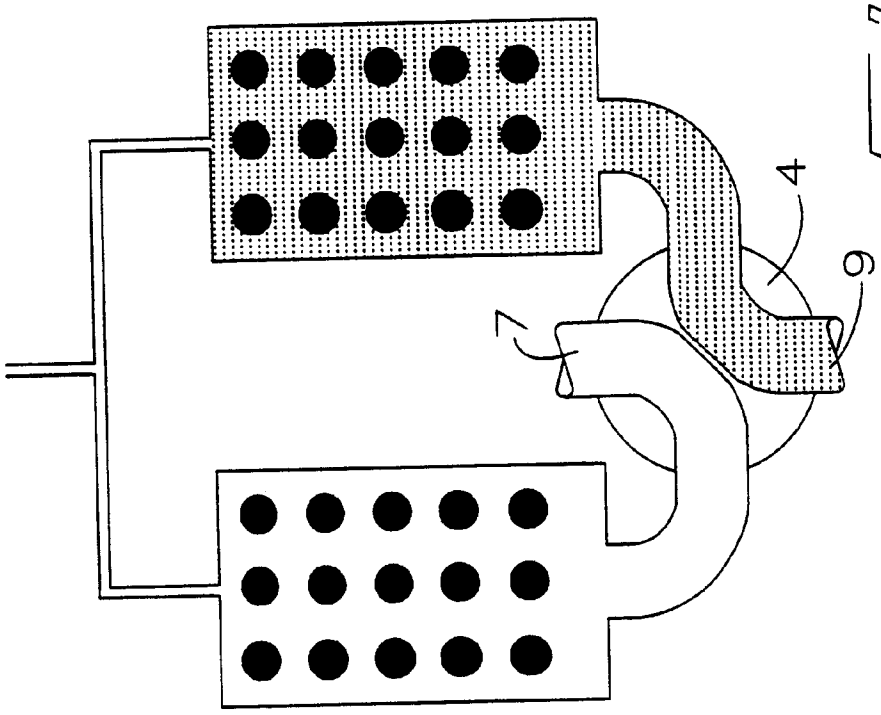


Fig 1B

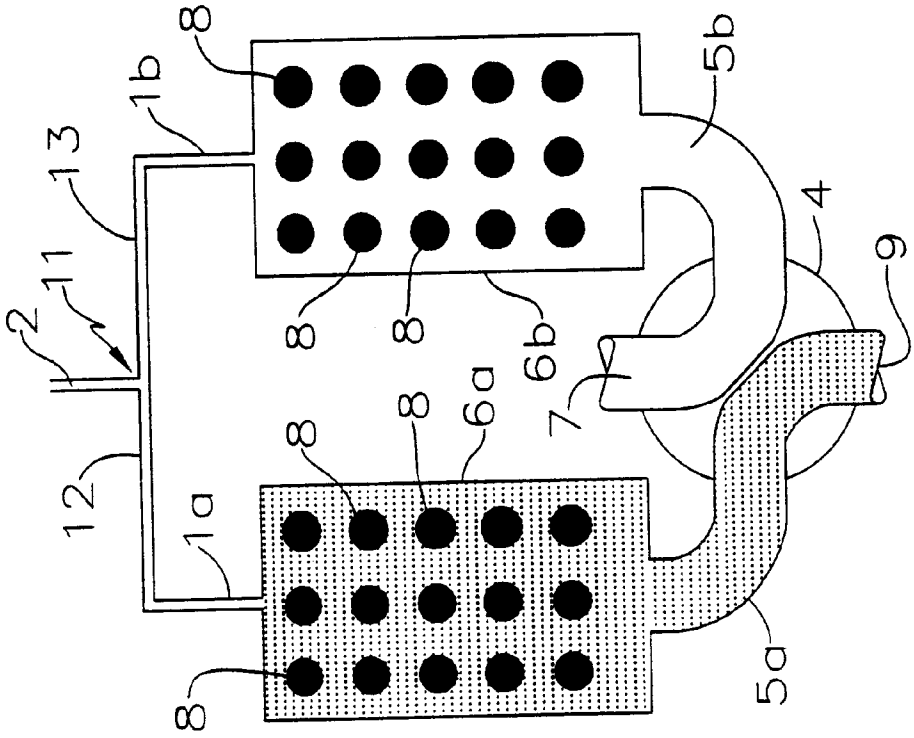


Fig 1A

PRIOR ART

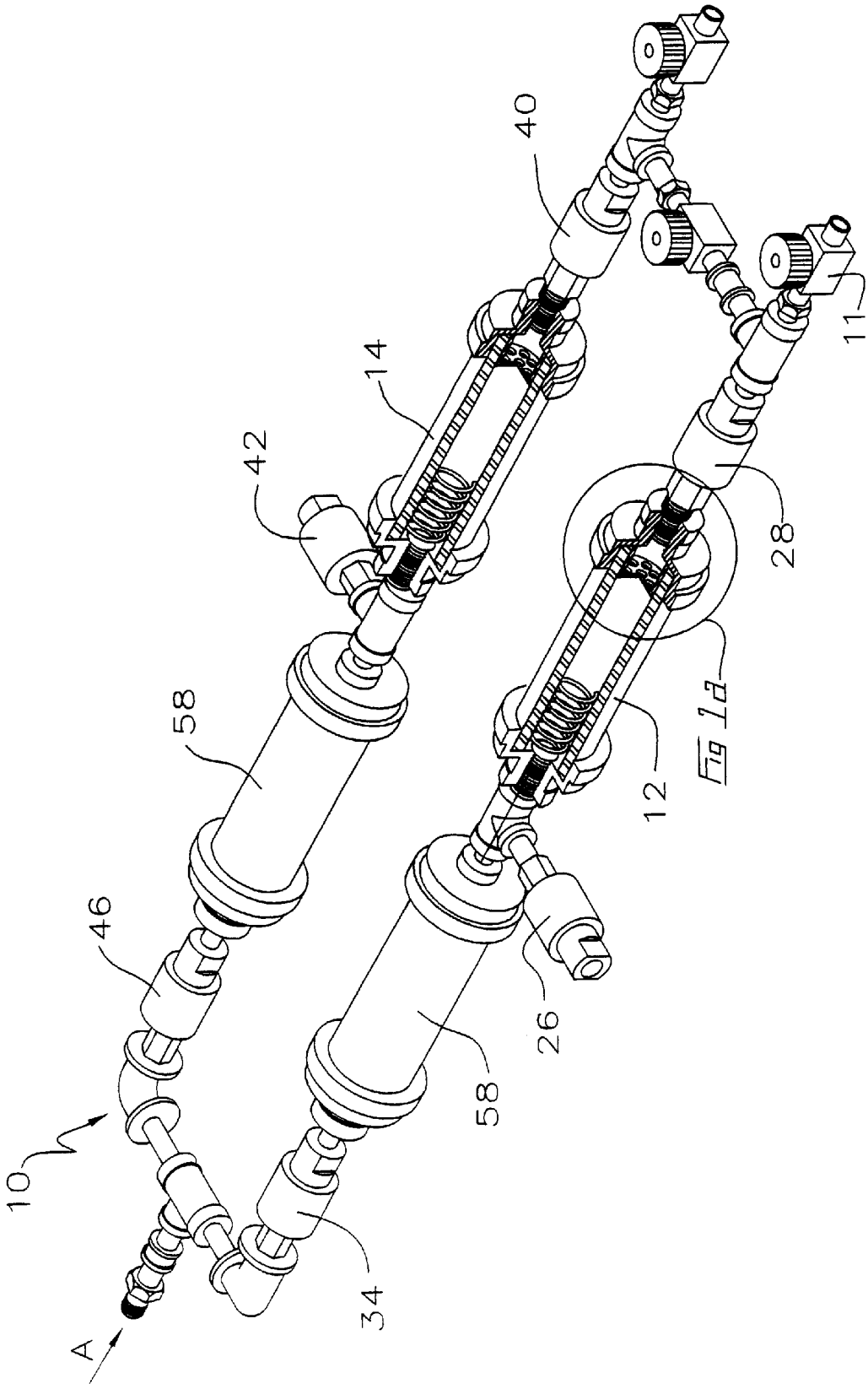


Fig 2

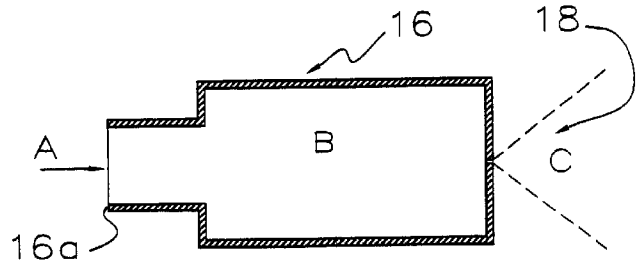


Fig 2b

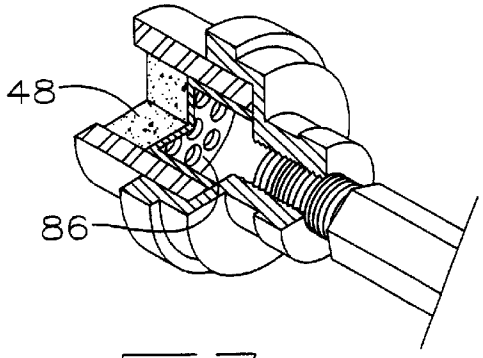


Fig 2a

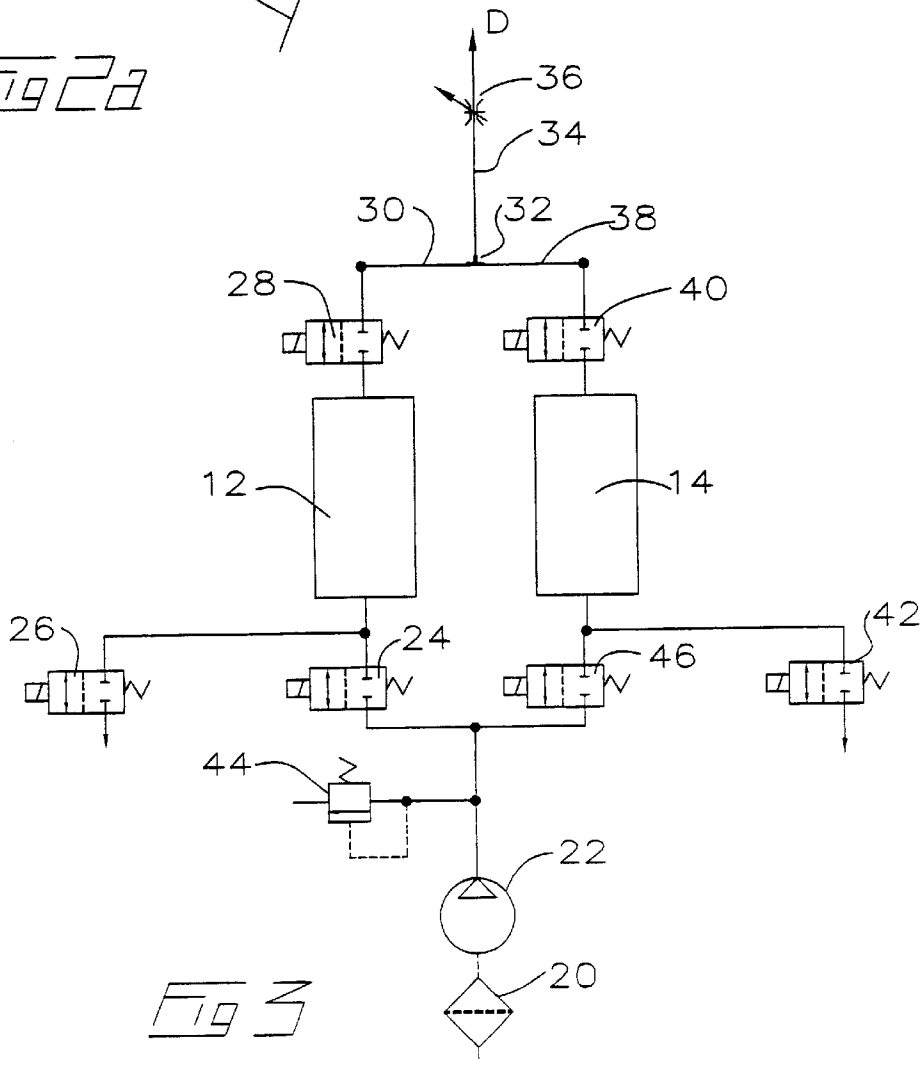


Fig 3

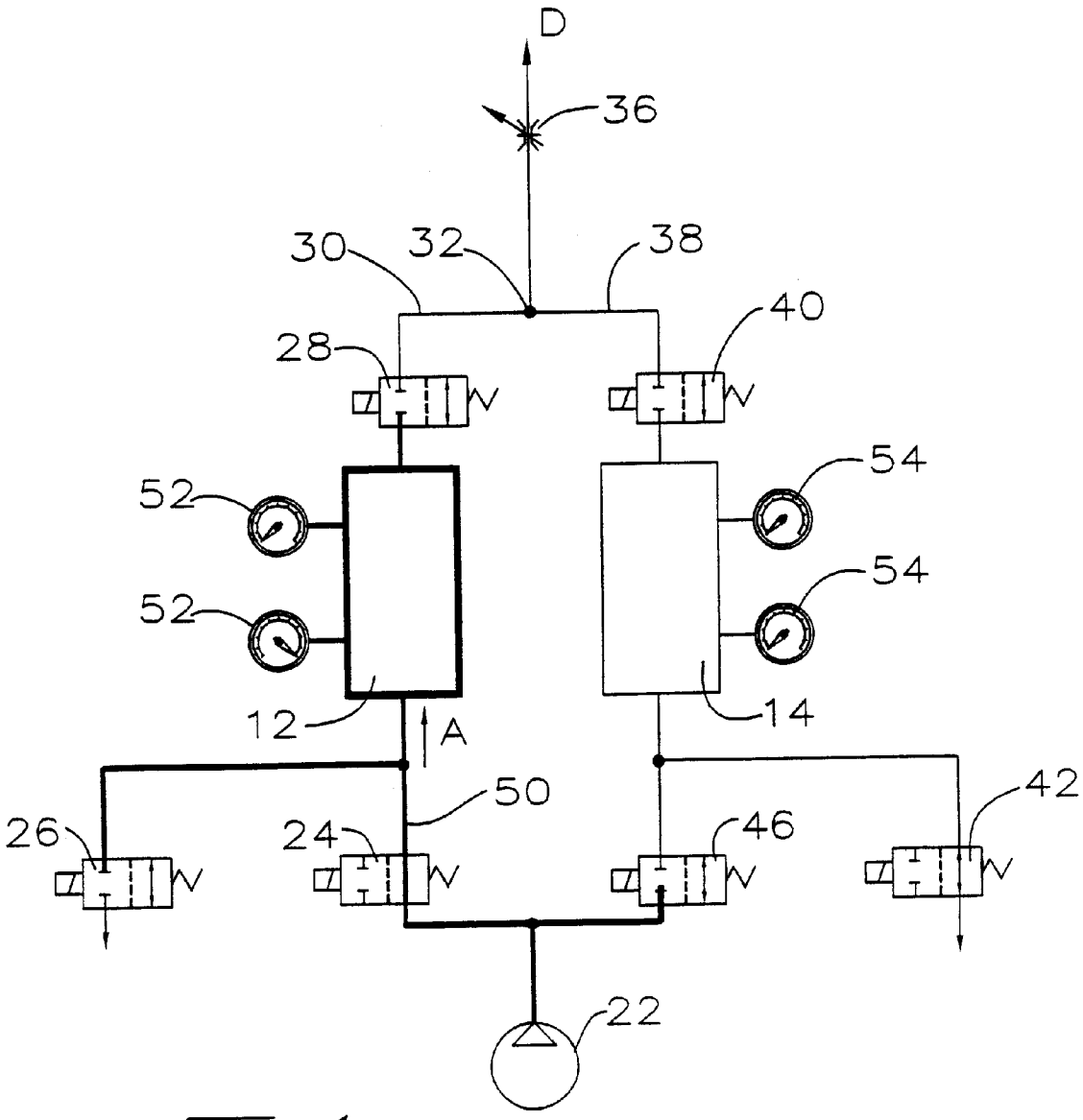


Fig 4

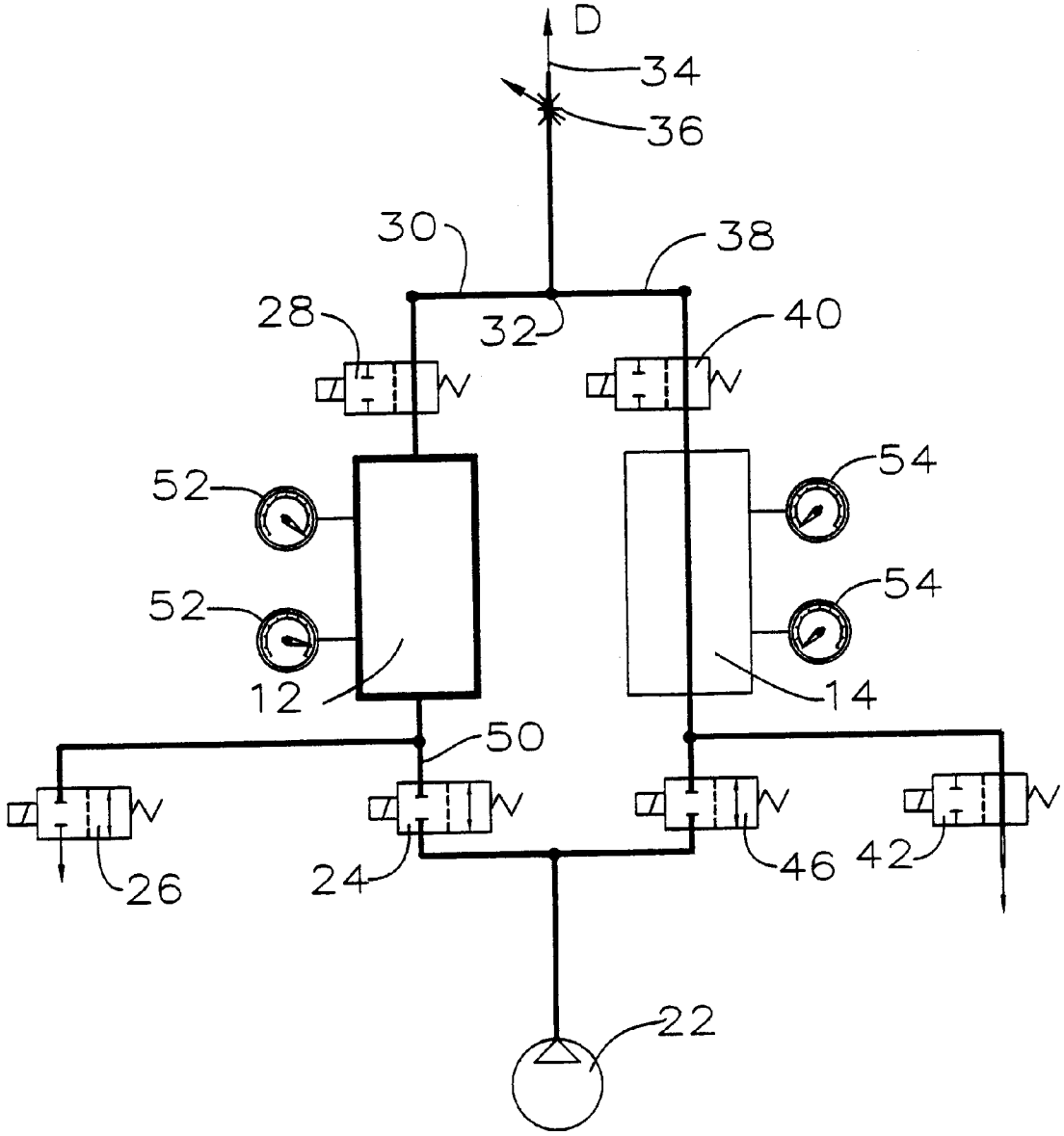


Fig 5

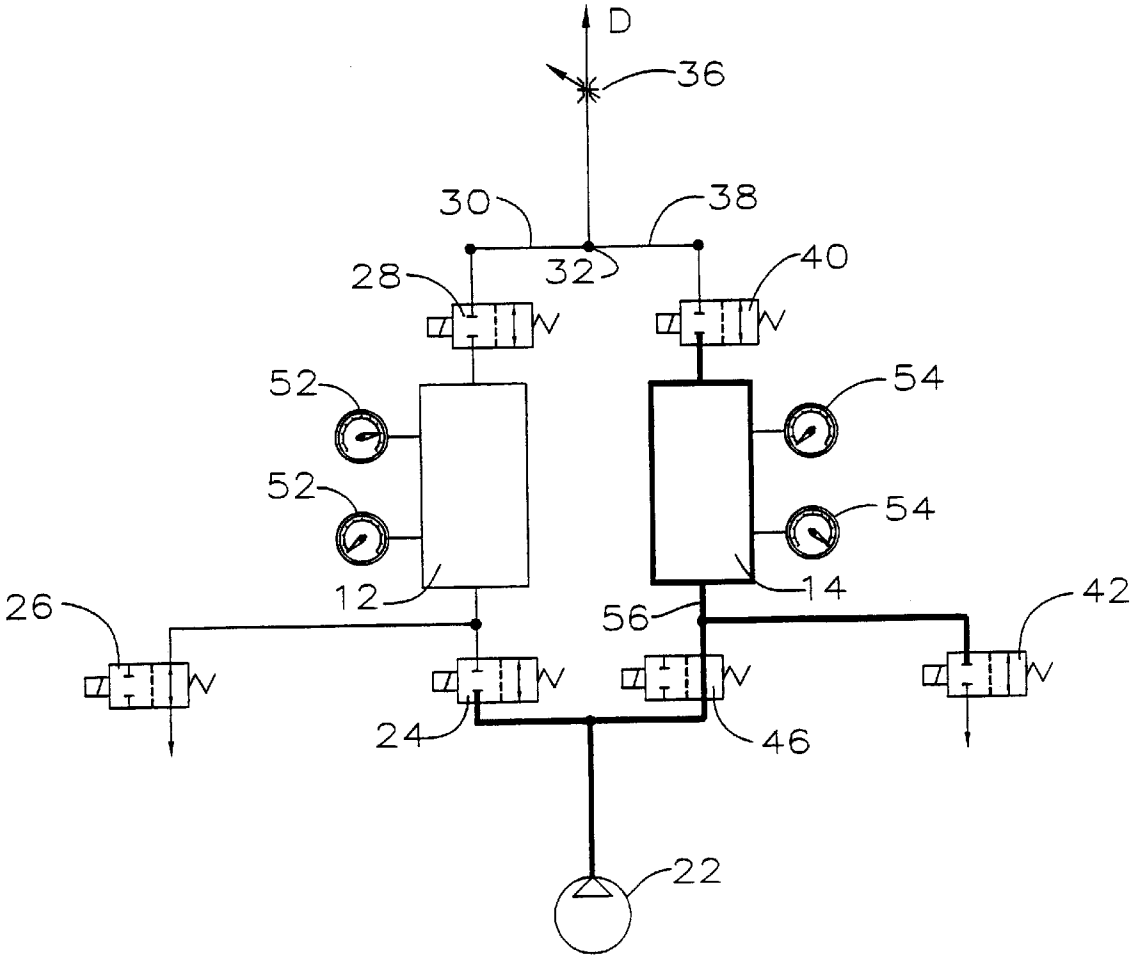


Fig 6

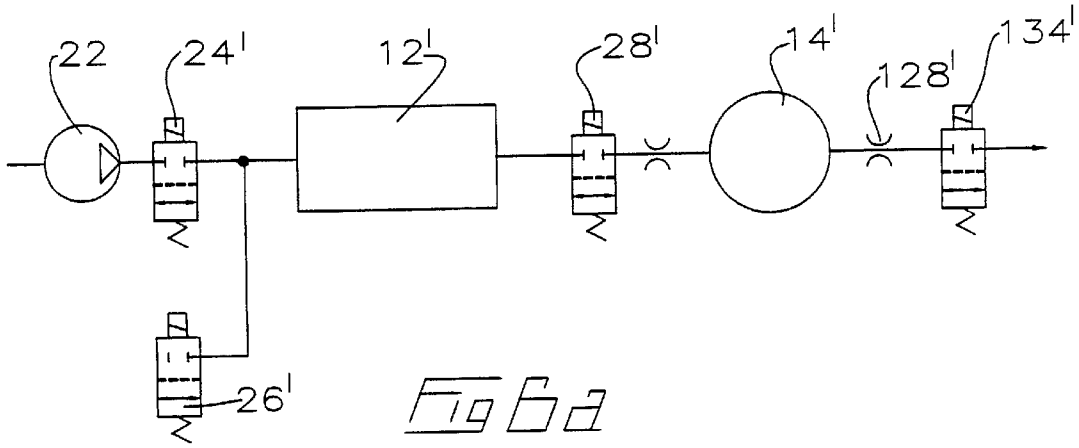
22
24'
12'
28'
14'
128'
134'
26'

Fig 6a

Fig 8

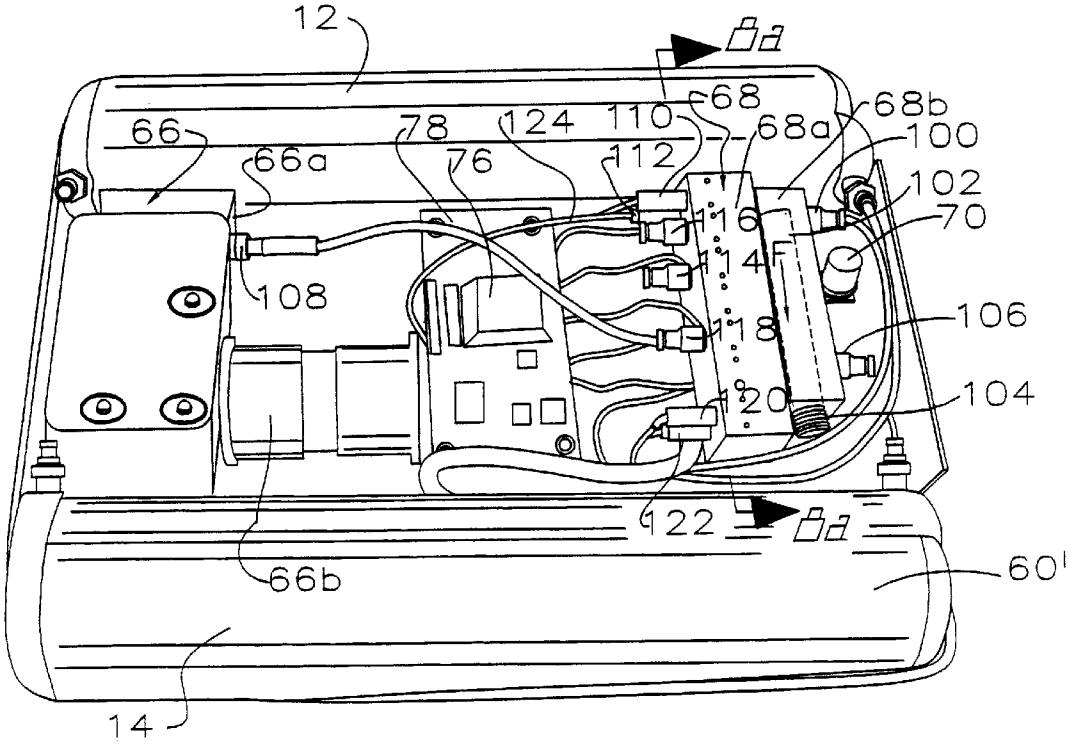
12
8a
68
68b
66
78
124
110
68a
100
66a
76
112
102
70
116
114
108
118
106
120
104
122
8a
66b
60'
14

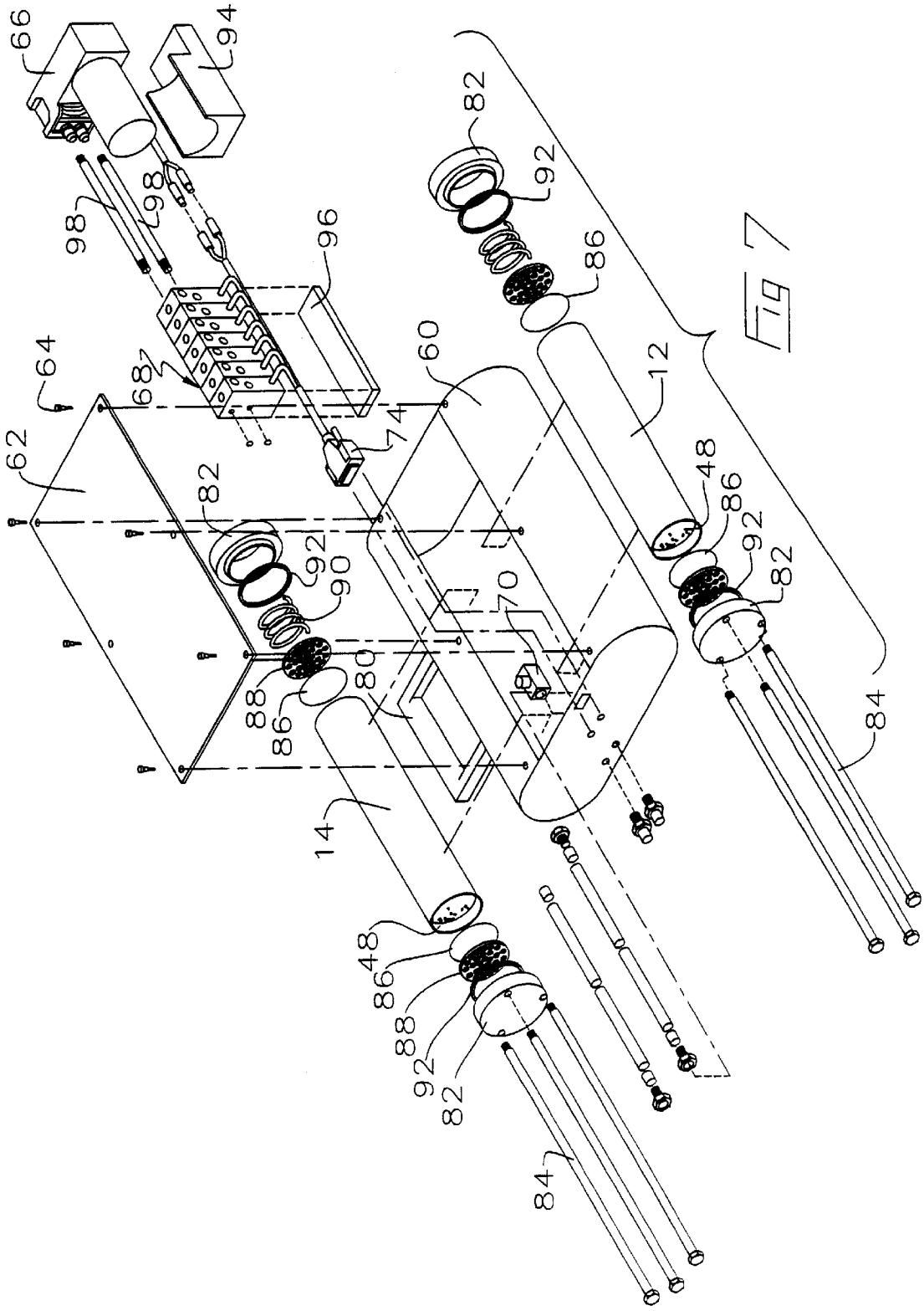
66
94
98
98
96
64
68
62
82
92
90
88
86
80
60
74
70
14
82
92
86
12
48
86
92
82
84
48
86
88
92
82
84

FIG 7

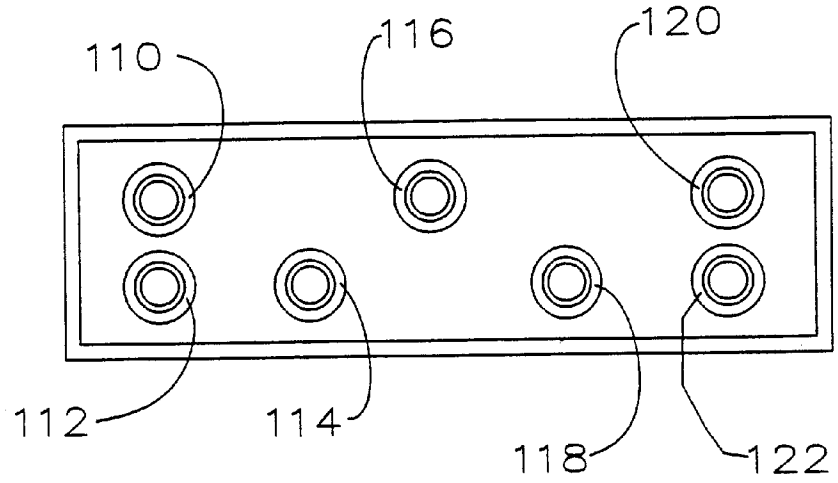


Fig 8a

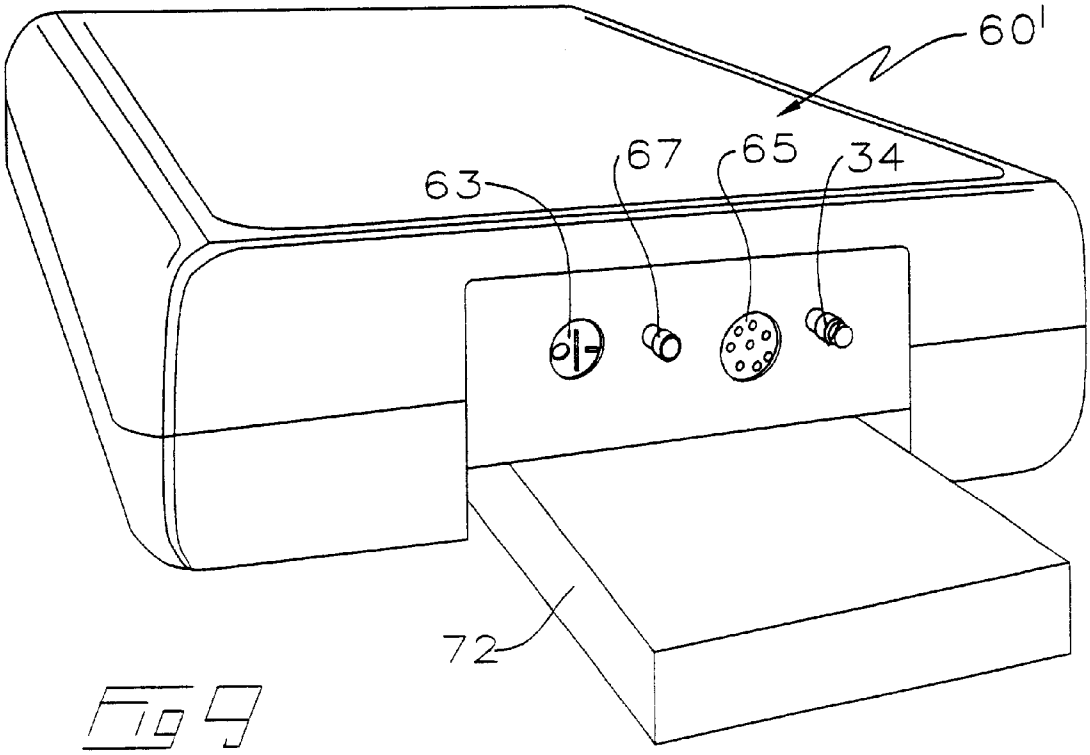


Fig 9

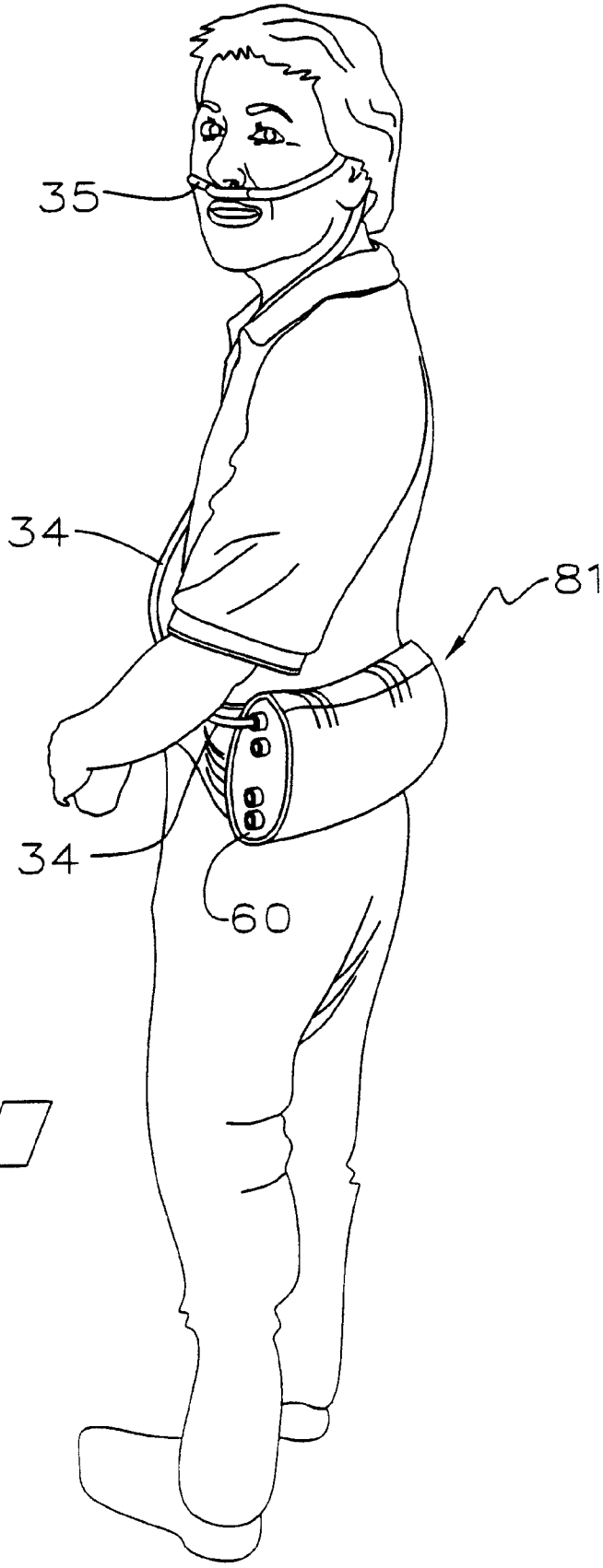


Fig 10

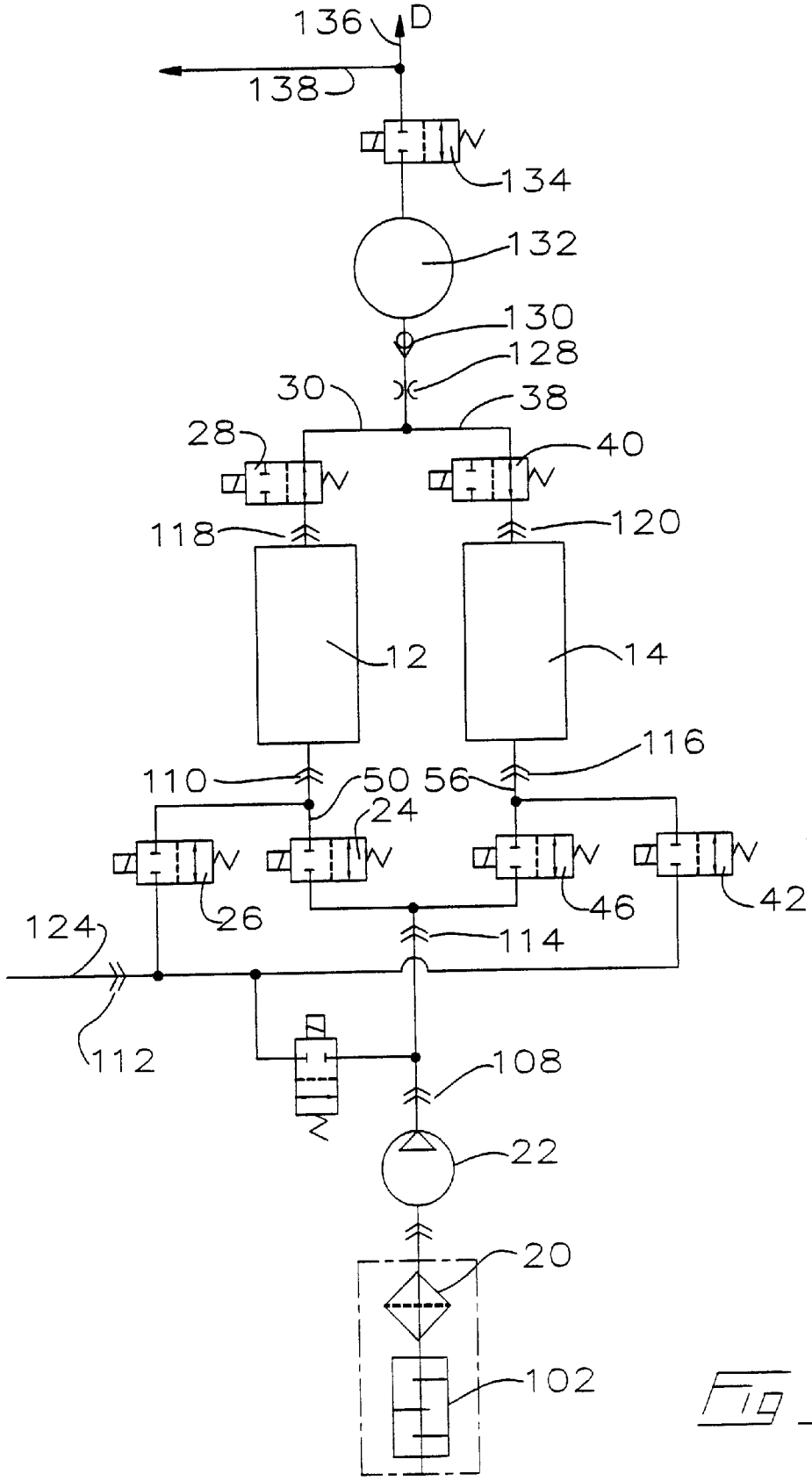
136
D
138
134
132
130
128
30
38
28
40
118
120
12
14
116
110
50
56
24
26
46
42
124
114
112
108
22
20
102

Fig 11

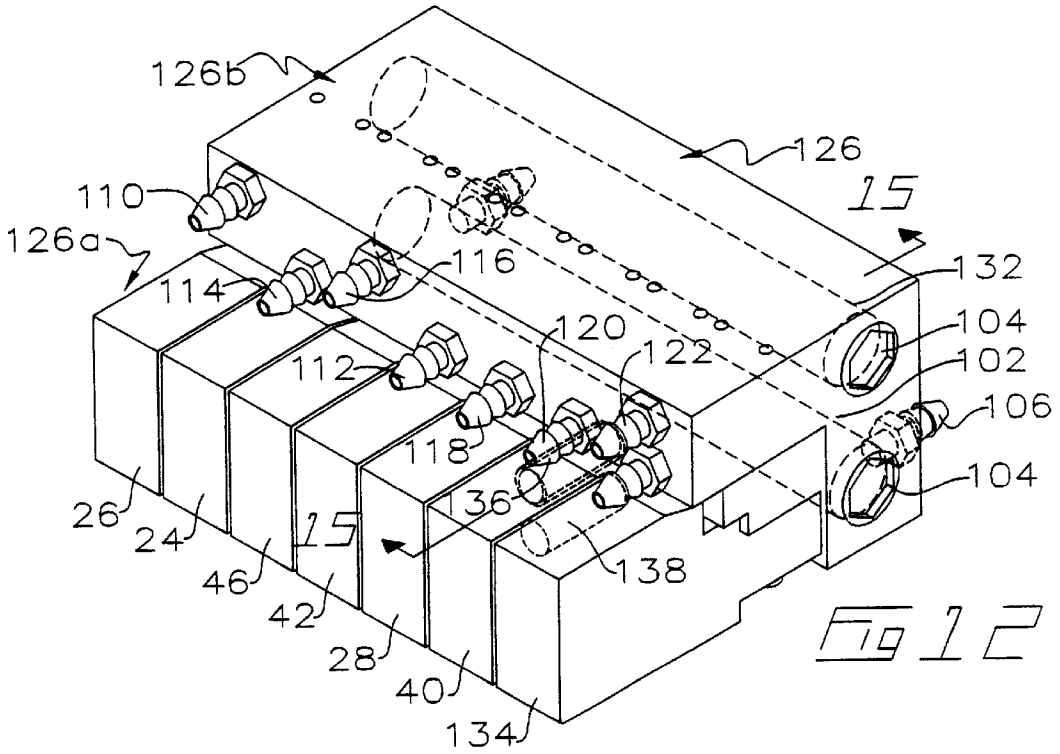
126b
126
15
110
126a
114
116
132
104
120
122
102
112
106
118
104
136
26
24
15
138
46
42
28
40
134

Fig 12

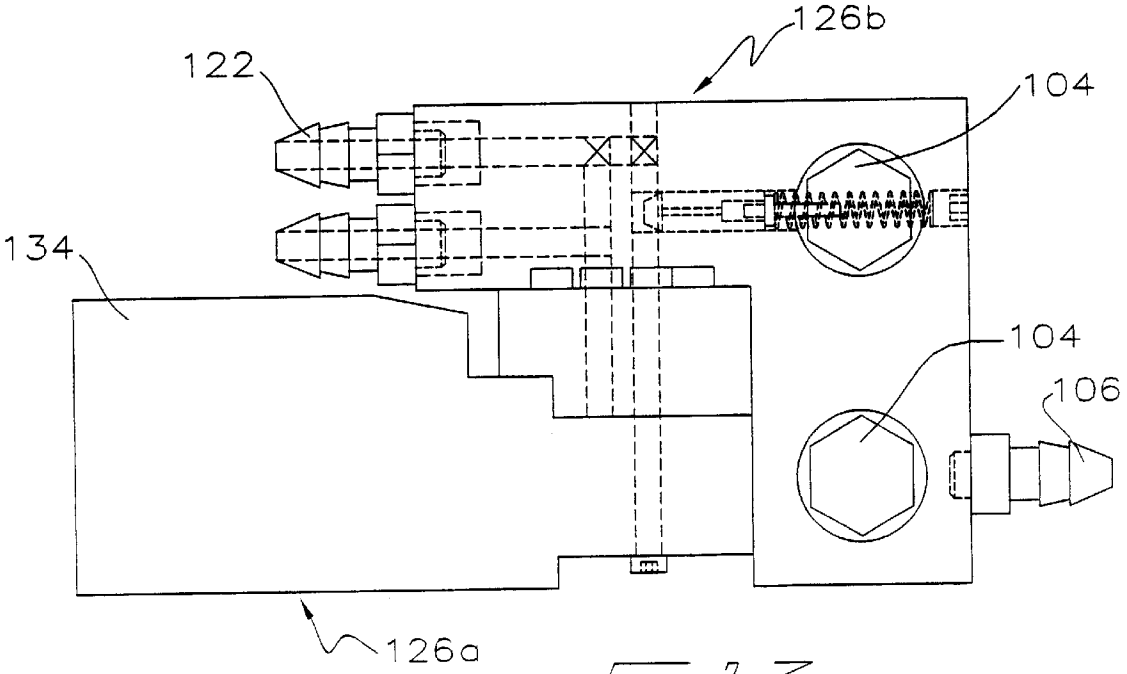
126b
122
104
134
104
106
126a

Fig 13

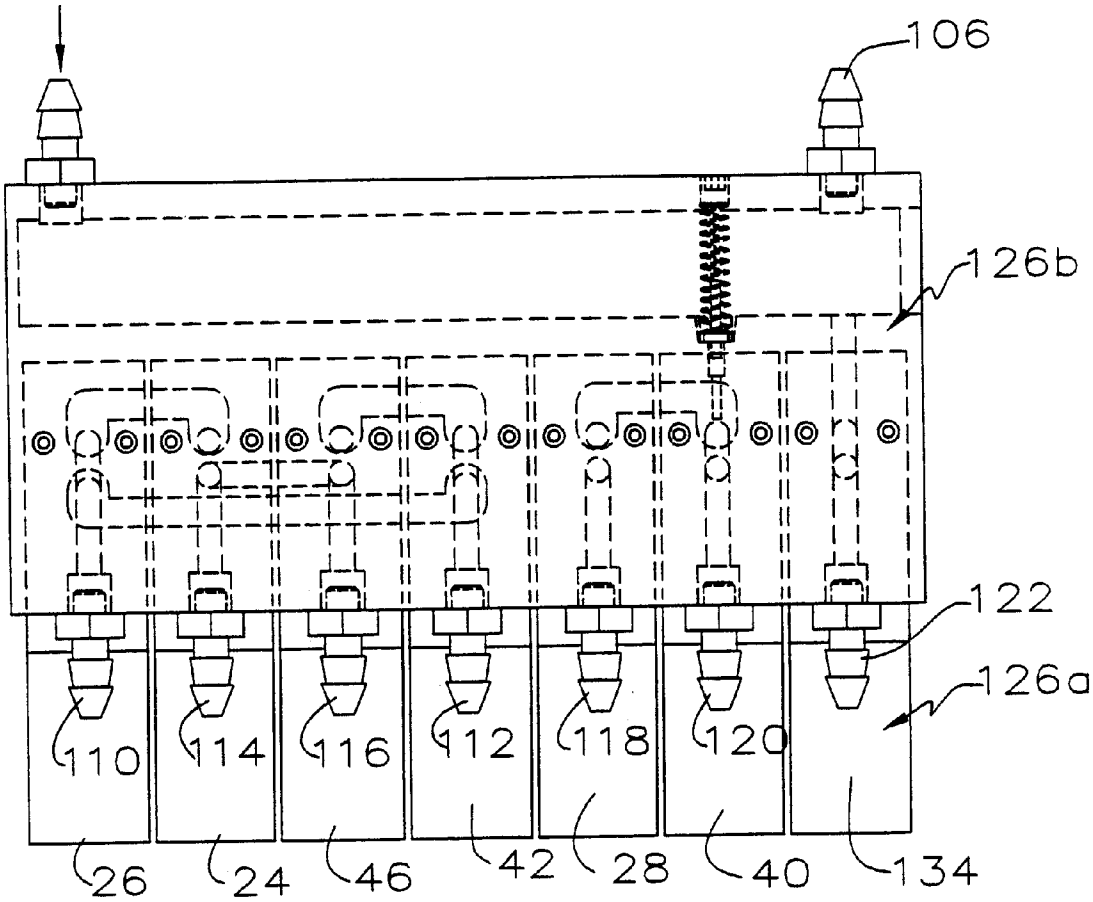


Fig 14

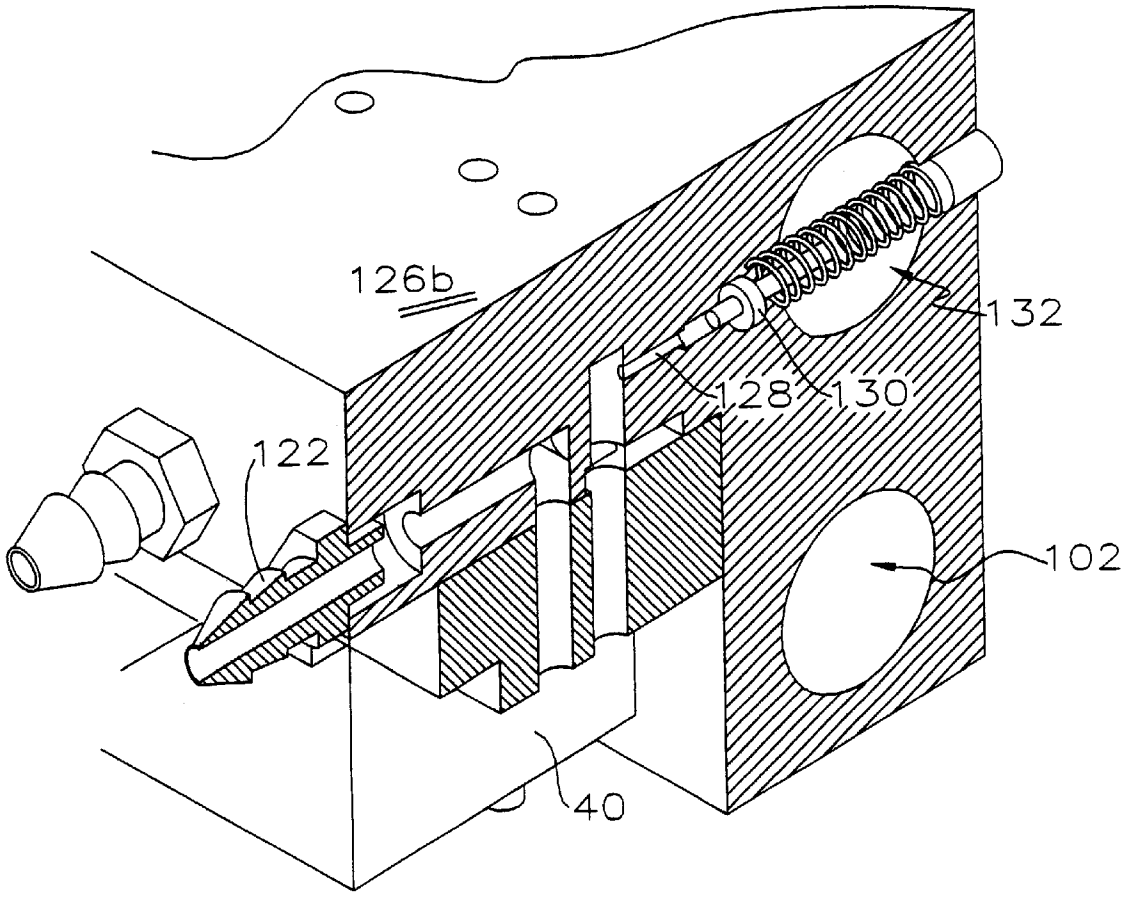


Fig 15

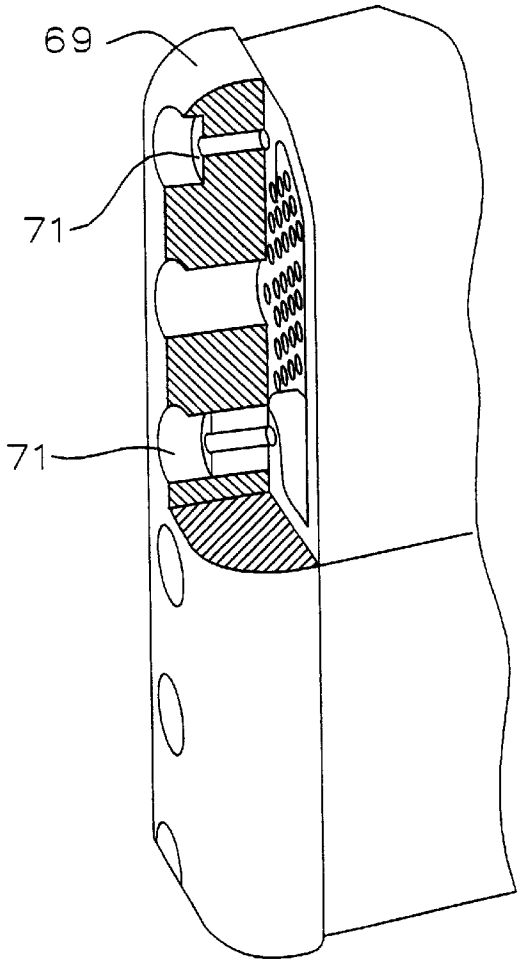


Fig 16a

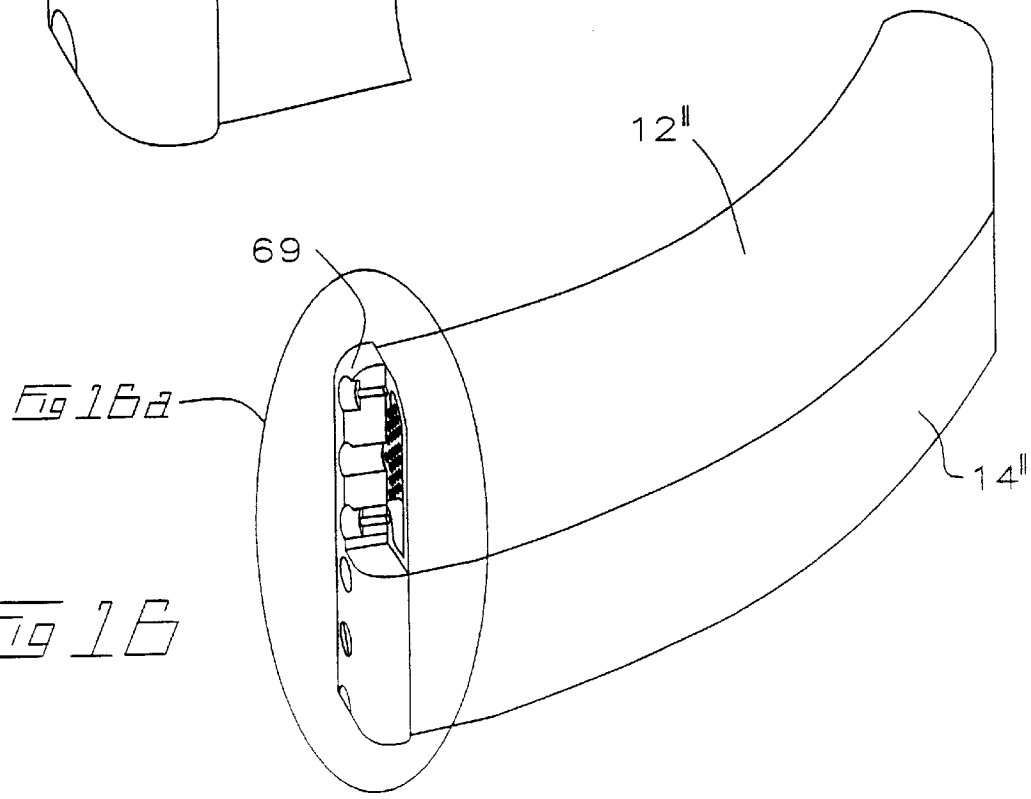


Fig 16

# MINIATURIZED WEARABLE OXYGEN CONCENTRATOR

## CROSS REFERENCE TO RELATED APPLICATION

This application claims priority from United States Provisional Patent Application No. 60/222,591 filed Aug. 2, 2000 entitled Portable Oxygen Concentrator.

## FIELD OF THE INVENTION

This invention relates to the field of gas concentrators, and in particular to a miniaturized, portable gas concentrator and method of miniaturized gas concentration.

## BACKGROUND OF THE INVENTION

The pressure swing adsorption cycle was developed by Charles Skarstrom. FIGS. **1**A and **1**B describe the operation of the Skarstrom "Heatless Dryer". In particular, ambient humid air is drawn into the system from an intake port, by a compressor. The pressurized air flows from the compressor through conduit **9** to a switching valve **4**. With the valve in the shown position in FIG. **1**A, pressurized air passes through conduit **5***a* to a pressure vessel **6***a*. The air feeds into the pressure vessel to a flow-restrictive orifice **1***a*. The effect of the restrictive orifice is to restrict the flow of gas escaping the pressure vessel. As the pressure builds up in the pressure vessel, water vapour condenses on the sieve material **8**. Air with reduced humidity passes through orifice **1***a* to conduit **12**. At conduit junction **11**, some of the air is extracted for use from gas extraction port **2** while the remainder passes through conduit **13** to restrictive orifice **1***b*. The less humid air that passes through orifice **1***b* is used to blow humid air out of the unpressurized vessel **6***b*, through conduit **5***b*, through valve **4**, to a vent port **7**. When valve **4** switches to the position as shown in FIG. **1**B, the opposite cycle occurs.

Thus, as valve **4** cycles from the position of FIG. **1**A to the position of FIG. **1**B, cyclically, there is a gradual reduction of humidity in the air as sampled at port **2**. Likewise gases can be separated by adsorbing components of the gas on selective molecular sieves.

From laboratory observations, employing the Skarstrom cycle in the context of an oxygen separator or concentrator, wherein nitrogen is absorbed by molecular sieve beds to incrementally produce oxygen-enriched air, and using a precursor to the concentrator **10** arrangement of FIG. **2**, it was observed that miniaturized (in this case nominal ¾ inch NPT pipe×6 inch long) molecular sieve beds **12** and **14** could only reach a maximum of 30% concentrated or enriched oxygen detected at the gas extraction ports **11**. It was thought that this was because the control valve of the laboratory arrangement was switching before all the nitrogen could be vented out of the molecular sieve beds and the exhaust lines. However, measurements from these places showed that the oxygen concentration was higher than normal. Therefore this was not the problem.

It was also observed that there was a lot of air flow coming out of the molecular sieve bed before the molecular sieve bed was completely pressurized. It seemed that the molecular sieve bed was saturated with nitrogen before the bed was finished pressurizing. FIG. **2**B diagrammatically represents such a molecular sieve bed **16**. Compressed air enters the bed in direction A through inlet passage **16***a*. A volume of air B is contained within the bed cavity. A proportion of the volume of air C escapes out through an outflow needle valve **18** while the molecular sieve bed pressurizes. It was thought



that the volume of air C escaping could be a much larger volume than the volume of air B inside the bed **16**. Thus the question became, what happens when the volume of the molecular sieve bed is decreased during miniaturization, but everything else stays the same?

Poiseauille's Law was used in comparing the old bed volume B to the miniaturized bed volume to calculate the flow of a fluid that passes through a small hole such as needle valve **18** under a pressure difference.

$$1)\ Q = \frac{r^4(p_{InsideBed} - p_{OutsideBed})}{8\eta L}$$

Where "Q" is the fluid flow in meters cubed per second. "r" is the radius of the small hole. "$p_{IsideBed}-p_{OutsideBed}$" is equal to the pressure difference between inside the molecular sieve bed and outside the molecular sieve bed. "η" is the fluid viscosity, and "L" is the depth of the small hole.

The flow rate, Q, in meters per second multiplied by the time the flow rate occurred is equal to the volume of flow in meters cubed.

$$2)\ V=Qt$$

The variable for Q in equation 1 in this case is constant so

$$3)\ V=Kt$$

where K is some constant value.

Using this information to create a comparison of the Flows and Volumes of the original oxygen concentrator's bed volume to the new bed volume may be described as.

$$4)\ R = \frac{\dfrac{V_{FlowNew}}{V_{BedVolumeNew}}}{\dfrac{V_{FlowOld}}{V_{BedVolumeOld}}}$$

Since the time to pressurize the molecular sieve bed can be accurately timed using a programmable logic controller (PLC) timer, the following can be stated:

$$5)\ R = \frac{\dfrac{Kt_{New}}{V_{BedVolumeNew}}}{\dfrac{Kt_{Old}}{V_{BedVolumeOld}}} \text{ or}$$

$$6)\ R = \frac{Kt_{New}V_{BedVolumeOld}}{Kt_{Old}V_{BedVolumeNew}} = \frac{t_{New}V_{BedVolumeOld}}{t_{Old}V_{BedVolumeNew}}$$

The ratio may then be calculated by inserting values using representative values for a prior art bed and a miniaturized bed (in this case ¾ inch NPT×6 inch long). Thus, for example:

$$7)\ R = \frac{(1)(0.001885741)}{(7)(0.0000434375)} = 6.2$$

From this it was concluded that the molecular sieve material of a nominal ¾ inch NPT pipe×6 inch long molecular sieve bed (the example used in equation 7) has approximately 6.2 times the air passing through it during its pressurization cycle than the molecular sieve material of a prior art oxygen concentrator during its pressurization cycle.

As a consequence of the findings of this analysis it was found to be advantageous to pressurize and vent the molecu-

lar sieve beds in a different way than the prior art pressure swing adsorption (PSA) technique. In the method of the present invention the bed is not vented until the bed is substantially fully pressurized, hereinafter referred to as an air packet system or method.

## SUMMARY OF THE INVENTION

In summary, the gas, such as oxygen, concentrator of the present invention for enriching a target component gas concentration, such as the oxygen concentration, and minimizing a waste component gas concentration, such as the nitrogen concentration, in a gas flow, includes an air compressor, an air-tight first container containing a molecular sieve bed for adsorbing the waste component gas, the first container in fluid communication with the compressor through a first gas conduit, and an air-tight second container in fluid communication with the first container through a second gas conduit. A gas flow controller such as PLC controls actuation of valves mounted to the gas conduits. The valves regulate air flow through the conduits so as to sequentially, in repeating cycles:

(a) prevent gas flow between the first and second containers and to allow compressed gas from the compressor into the first container during a first gas pressurization phase, whereby the first container is pressurized to a threshold pressure level to create a gas packet having an incrementally enriched target component gas concentration such as incrementally enriched oxygen-enriched air;

(b) prevent gas flow into the first container from the compressor and allow gas flow from the first container into the second container during a gas packet transfer phase, wherein the gas packet is transferred to the second container;

(c) prevent gas flow into the second container from the first container and allow gas to vent to atmosphere out from the first container through a vent valve of the first container;

(d) allow gas flow between the first and second containers from the second container into the first container during an air packet counter-flow phase, wherein the gas packet flows from the second container to the first container; and,

(e) prevent gas flow venting from the first container through the vent valve of the first container.

A gas flow splitter is mounted to the second gas conduit for diverting a portion of the gas packet into a gas line for delivery of target component gas, such as oxygen, enriched air for an end use, including use by an end user, downstream along the gas line.

In one embodiment of the present invention, both the first and second containers contain molecular sieve beds for adsorbing the waste component gas, in which case the second container is also in fluid communication with the compressor; for example through a third conduit. Also, in that case, the gas flow controller, following the air packet transfer phase and following preventing gas flow into the second container from the first container, allows compressed gas from the compressor into the second container during a second gas pressurization phase, whereby the second container is pressurized to the threshhold pressure level. The gas flow controller, following preventing the gas flow from venting from the first container through the vent valve of the first container and following preventing gas flow between the first and second containers during the first gas pressurization phase, allows gas to vent to atmosphere out from the second container through a vent valve of the second container and prevents gas flow into the second container from the compressor.

The gas flow controller may be a processor cooperating with the compressor so as to shut off the compressor when gas flow from the compressor into both the first and second containers is prevented. The processor and the compressor may be powered by a battery. The first and second containers, the conduits, the valves, the processor, the compressor and the battery may be mounted in a housing.

The first and second containers may be elongate hollow conduits. The molecular sieve beds may, where the waste component gas is nitrogen, include Zeolite as the molecular sieve material. The first and second containers may be generally parallel and mounted in the housing in parallel array. They may be spaced apart laterally relative to the length of the containers so as to define a channel therebetween. The processor and the compressor may be mounted in the channel. A valve and manifold housing may also be mounted in the channel, the valves mounted to the valve and manifold housing. The valve and manifold housing includes interconnecting manifolds for interconnecting the valves to the first and second containers and the compressor via the gas conduits.

A gas reservoir may be provided, for example formed as part of the valve and manifold housing, in fluid communication with the gas flow splitter. The reservoir is for containing a reserve of, for example, the oxygen-enriched air for delivery to the end use. One of the valves is a demand valve cooperating between the gas line and the reservoir for release of the reserve into the gas line upon a triggering event triggering actuation of the demand valve. In one embodiment, a pressure sensor cooperates with the gas line, and the triggering event is a drop in pressure in the gas line sensed by the pressure sensor. The pressure sensor provides a triggering signal to trigger the actuation of the demand valve upon detecting the drop in pressure, for example to a pre-set lower threshold pressure, below which the pressure sensor provides the triggering signal.

In one embodiment, the compressor is run intermittently upon actuation signals from the processor so as to only run when required, including during the pressurization phase.

In the embodiments in which the end use is for example oxygen supply to an end user such as a patient, the first and second containers may be elongate and curved along their length so as to conform to a body shape of the end user when the gas concentrator is worn by the end user. In any event, when the end use is oxygen supply to an end user, it is intended that the gas concentrator may be adapted to be worn by the end user.

Thus the method of the present invention includes the sequential steps, in repeating cycles, of:

(a) preventing gas flow between the first and second containers and allowing compressed gas from the compressor into the first container during a first gas pressurization phase, whereby the first container is pressurized to a threshold pressure level to create a gas packet having incrementally enriched target component gas concentration;

(b) preventing gas flow into the first container from the compressor and allowing gas flow from the first container into the second container during a gas packet transfer phase, wherein the gas packet is transferred to the second container;

(c) preventing gas flow into the second container from the first container and allowing gas to vent to atmosphere out from the first container through a vent valve of the first container;

(d) allowing gas flow between the first and second containers from the second container into the first container during an air packet counter-flow phase, wherein the gas packet flows from the second container to the first container; and,

(e) preventing gas flow venting from the first container through the vent valve of the first container.

Where the gas concentrator further includes a molecular sieve bed for adsorbing the waste component gas in the second container and wherein the second container is in fluid communication with the compressor through a third conduit, the method of the present invention further includes the steps of:

(a) following the gas packet transfer phase and following preventing gas flow into the second container from the first container, the gas flow controller allowing compressed gas from the compressor into the second container during a second gas pressurization phase, whereby the second container is pressurized to the threshold pressure level; and

(b) following preventing the gas flow from venting from the first container through the vent valve of the first container and following preventing gas flow between the first and second containers during the first gas pressurization phase, the gas flow controller allowing gas to vent to atmosphere out from the second container through a vent valve of the second container and preventing gas flow into the second container from the compressor.

## BRIEF DESCRIPTION OF THE DRAWINGS

FIGS. **1**A and **1**B illustrate the Skarstrom Heatless Air Drying Device.

FIG. **2** is, in perspective view, a prototype embodiment of the oxygen concentrator of the present invention.

FIG. **2***a* is, in partially cut-away enlarged view, one end of a molecular sieve bed of FIG. **2**.

FIG. **2***b* is a diagrammatic view of a singular molecular sieve bed having an uncontrolled outlet orifice such as would be found in the prior art pressure swing adsorption method.

FIG. **3** is a block diagram of one embodiment of the oxygen concentrator of the present invention.

FIG. **4** is a block diagram of a further embodiment of the oxygen concentrator of the present invention during pressurization of a first molecular sieve bed during an initial pressurization phase.

FIG. **5** is a block diagram of the oxygen concentrator of FIG. **4** during an air packet transfer phase.

FIG. **6** is the oxygen concentrator of FIG. **5** during pressurization of a second molecular sieve bed.

FIG. **6***a* is a block diagram of one embodiment of the oxygen concentrator of the present invention.

FIG. **7** is, in exploded perspective view, one embodiment of the oxygen concentrator of the present invention.

FIG. **8** is, in perspective view, a further embodiment of the oxygen concentrator of the present invention.

FIG. **8***a* is a cross-sectional view along line **8***a*–**8***a* in FIG. **8**.

FIG. **9** is, in end-on perspective view, a housing according to one embodiment of the oxygen concentrator of the present invention.

FIG. **10** is, in perspective view, an end user wearing an oxygen concentrator according to one embodiment of the present invention.

FIG. **11** is a block diagram of a further embodiment of the oxygen concentrator according to the present invention.

FIG. **12** is, in perspective view, a valve and manifold housing according to one embodiment of the oxygen concentrator of the present invention.

FIG. **13** is, in side elevation view, the valve and manifold housing of FIG. **12**.

FIG. **14** is, in plan view, the valve and manifold housing of FIG. **13**.

FIG. **15** is a cross-sectional view along line **15**—**15** in FIG. **12**.

FIG. **16** is, in partially cut-away perspective view, a further embodiment of the molecular sieve beds of the oxygen concentrator of the present invention.

FIG. **16***a* is, in partially cut-away enlarged view, one end of the molecular sieve beds of FIG. **16**.

## DETAILED DESCRIPTION OF EMBODIMENTS OF THE INVENTION

With reference to the accompanying figures in which like parts have the same reference numerals in each view, details of the concentration process and apparatus of the present invention are now provided. As used herein, including as used in the claims set out below, all references to oxygen and oxygen-enriched are intended to include other end-use gases which may be advantageously used in any end use once separated or concentrated according to the present invention from a parent gas (for example ambient air) comprising the end-use gas (for example oxygen) and waste gases (for example nitrogen) which may be adsorbed by a molecular sieve bed.

As can also be seen in FIG. **3** which is a diagrammatic illustration of an arrangement implementing the oxygen concentrator of the present invention, air is filtered through intake filter **20** and is pressurized by compressor **22**. The air stream is directed to pressurize bed **12** by having a supply valve **24** for bed **12** open and a nitrogen vent **26** for bed **12** closed. Control valve **28** is closed so that bed **12** pressurizes without any air venting. Valves **24**, **26** and **28** may be solenoid valves. When bed **12** is pressurized, for example to **10** psi, then supply valve **24** is closed so that no more air enters into bed **12**. At the same time control valve **28** is opened for a time to allow oxygen-enriched air to flow through air conduit **30** and the through air flow splitter **32** so as to split a percentage of the air flow through a gas extraction port and air flow conduit **34** so as to supply oxygen-enriched air to an end us at the end of conduit **34** such as a patient breathing the oxygen-enriched air flow. Conduit **34** supplies flow in direction D to an end-use (such as machine requiring or using oxygen-enriched air) or an end-user (such as seen in FIG. **10**) through a needle valve **36**. The remainder of the airflow continues through conduit **38** through open control valve **40** into bed **14** so as to be contained therein. Oxygen-enriched air that flows into bed **14** to purge the bed of nitrogen, vents out through the nitrogen vent **42**. In an embodiment where the compressor is not turned on and off to preserve battery life, while bed **12** is generating oxygen-enriched air, pressure relief valve **44** may be venting air from compressor **22** unless the compressor is being run intermittently on a demand-based basis as better described below. Pressure may be relieved by the use of PLC time-controlled solenoid valves or pressure relief valves. It has been found advantageous to use 10 Angstrom Zeolite for example Oxi-sive **5** (13×)™ Zeolite marketed by OUP in Calgary, Alberta, Canada, although other forms of Zeolite will also work.

The steps in concentrating oxygen are illustrated diagrammatically in FIGS. **4–6**. The first step is to introduce ambient air into the inside of bed **12** (i.e. a chamber filled with Zeolite), then to pressurize bed **12**.

FIG. **4** illustrates pressurizing bed **12** for the first time. Herein the thickened and darkened air supply lines **50** and the darkened bed **12** indicate pressurized flow or pressurized static gas. The control valve **28**, nitrogen vent bed **26** and supply valve **46** for bed **14** are closed, while supply valve **24** is open. At this point compressor **22** is introducing ambient air into bed **12** and pressurizing it. This continues until the bed reaches for example 10 psi as indicated by the pressure gauge **52**. Next, supply valve **24** is closed and the pressurized air contained in bed **12** is separated into oxygen and nitrogen by the granular Zeolite molecular sieve material **48** better seen in FIG. **1***a*. At a molecular level the nitrogen is adsorbed by the Zeolite and held as long as the bed is under pressure. This leaves the oxygen-enriched gas within the pressurized chamber or cavity of the bed. It has been observed that this process occurs almost instantaneously. The pressure in bed **14** remains at ambient as indicated by pressure gauge **54**.

Next, as shown in FIG. **5**, control valve **28** is opened. The oxygen which had been separated within the chamber of bed **12** is the first gas to leave bed **12** as pressure is released through control valve **28**. This oxygen-enriched air is fed from bed **12** into bed **14** through conduits **30** and **38**. During this transfer some of the oxygen-enriched air is also released via splitter **32** through conduit **34** to the end-use or end-user as air flow in direction D, as regulated by adjustable needle valve **36**. Splitter **32** and valve **36** may be a T-junction having a needle valve allowing for control of the split-off flow rate. As better described below, this may also be accomplished by a calibrated orifice controlling the split-off flow rate. As the oxygen-enriched air enters bed **14** it displaces the ambient air in bed **14** out of nitrogen vent **42**. A net increase in the oxygen concentration contained within bed **14** results. The counter-flow is discontinued before nitrogen is entered into the system to prevent a drop in oxygen concentration. For example, a bed initially pressurized to 20 psi, counter-flow would be discontinued as the pressure drops to approximately 7 psi because nitrogen will start leaching into the air-stream at that point. In a larger industrial embodiment of the present invention, where the packet system of the present invention is employed for use with large beds, then oxygen or nitrogen sensors may be employed to detect when optimal oxygen concentration levels are reached (i.e. peaked) or to detect when nitrogen levels start to rise so as to control the counter-flow duration. Such sensors may be installed for example adjacent the control valves, for example control valves **28**, **40**.

The process then repeats, but in the reverse order. As seen in FIG. **6**, which shows the pressurization of bed **14**, the oxygen-enriched air which had been introduced into bed **14** is contained by closing control valve **40** and nitrogen vent **42**. Next, supply valve **46** is opened and compressor **22** begins to compress the oxygen-enriched air, again up to for example 10 psi through air conduits **56** into bed **14**. Also, at this time control valve **28** and nitrogen vent **26** are opened to vent off the residual nitrogen from bed **12**. Supply valve **24** is closed.

After the molecular sieve material **48** and gas contained within bed **14** are pressurized, control valve **40**, control valve **28** and nitrogen vent **26** are opened. The oxygen-enriched air is then passed back into bed **12** from bed **14**. As this air is introduced into bed **12** it assists in displacing the residual nitrogen from bed **12** out from nitrogen vent **26**. After an optimized time, nitrogen vent valve **26** is closed along with control valve **28**, and supply valve **24** is opened to start the cycle over again from the beginning.

The process of transferring or shunting oxygen-enriched air from one bed to another is known as counter-flow. A reservoir **58** mounted upstream of the inlet for each molecular sieve bed may be employed to increase the counter flow volume to volume-to-the-end-user gas flow ratio.

Alternatively as seen in FIG. **6***a* counterflow may be accomplished by use of only one molecular sieve bed **12'** and one reservoir **14'**. Compressor **22** pressurizes an air flow through valve **24'** into bed **12'**. Oxygen-enriched air is shunted through valve **28'** from bed **12'** into reservoir **14'** instead of into a second bed, and then counter-flowed from the reservoir back into the bed using the packet air-flow system of the present invention. This also accomplishes incremental increases per cycle in the oxygen concentration of the air packet being shunted back and forth from and to the bed so as to allow splitting or bleeding off to an end user of an oxygen-enriched air supply through orifice **128'** and valve **134'**. Nitrogen in bed **12'** is purged or vented through valve **26'**. Alternatively the oxygen concentration according to the present invention may be accomplished by using a plurality of molecular sieve beds.

The counter-flow process is optimally timed to achieve an incremental increase in oxygen concentration per cycle. One way this is accomplished is by placing an oxygen concentration sensor on the end-user air flow conduit **34** and then, for example using an adjustable or otherwise regulatable splitter **32** to vary the percentage of air flow being diverted in direction D to the end-user and monitoring the percentage oxygen concentration in conduit **34**. It has been applicant's experience that in this fashion a maximum percentage oxygen concentration passing through conduit **34** may be ascertained, and once found, the setting of splitter **32** has been correspondingly optimized. Once, for a particular arrangement, an optimized flow rate or valve setting has been ascertained, splitter **32** may be replaced with a non-adjustable flow splitter having a flow restrictor in the end-user gas flow line which is preset or pre-sized to replicate the optimized end-user gas flow rate. Applicant has found it advantageous when optimizing the counter-flow to start with excess counter-flow and then reduce the amount of counter-flow (decreasing the counter-flow time), for example starting with a counter-flow time equivalent to 75% of the time it takes to pressurize the beds to 10 psi. This is not to be taken, however, as implying that pressurization may only be done using a time-based method, as it is intended that the scope of this invention include using an air packet method which is pressure-based rather than time-based. That is, rather than pressurizing or depressurizing the beds for a preset time, it may be that the bed pressure is monitored and the air packet shunted upon a pre-set pressure threshold being met. Applicant has also found that using the method of the present invention, the size of the molecular sieve beds may be reduced from that presently found in the prior art, for example reduced to 75% of the size currently used in the prior art. Applicant has also found that using the method and apparatus of the present invention, that oxygen levels in the end-user gas flow line may reach in excess of 90%, with 95% oxygen levels thought to be sustainably available.

As seen in the embodiment of FIG. **7**, molecular sieve beds **12** and **14** are contained within housing **60** in parallel spaced apart array so as to dispose the beds displaced laterally within the housing cavity thereby leaving a space between the beds running the length of the housing. This space between the beds may be accessed in one embodiment

by removal of face plate **62** from housing **60**, face plate **62** being releasably mounted to housing **60** for example by means of screw fasteners **64**.

Mounted between beds **12** and **14** within housing **60** are a compressor **66**, a valve and manifold housing **68**, a splitter valve **70** (to serve the function of splitter **32**) and various flexible pipe or tubing to serve as the air conduits as better described below. The actuation timing of the valve actuation and the actuation timing of the compressor are controlled by signals from a PLC or other processor. In the embodiment of FIG. **7**, the processor is remote from housing **60** and communicates via interface plug **74**. In the embodiment of FIG. **8**, which is otherwise substantially similar to that of FIG. **7**, the remote PLC or processor is replaced with an onboard PLC or processor **76** mounted on circuit board **78**, where circuit board **78** is mounted between compressor **66** and valve housing **68**. Also, in the embodiment of FIG. **8**, faceplate **62** is replaced with a one-half clam shell style cover (not shown), that is, the housing is formed as a clam shell cover arrangement as better seen in FIG. **9** and labeled as housing **60'**. An end-mounted control panel may contain an on/off power switch **63**, an air extraction port **34'** a perforated air intake plate or grate **65**, and a **12** volt DC connector **67**.

Housing **60'** may have a handle **80** mounted along one lateral side for carrying of the oxygen concentrator of the present invention, it being understood that providing for hand-held carrying is not intended to be limiting. The present invention is also intended in alternative embodiments to be worn by a user, for example in or as a backpack or hip pack or so-called fanny pack **81** such as seen in FIG. **10**. Conduit **34** extends from the housing to the end-user so that, where the end-user is a patient requiring a supply of oxygen-enriched air, conduit **34** may supply nasal tubes **35** as commonly in use in the prior art.

In the embodiments of FIGS. **7** and **8**, beds **12** and **14** may be 2 inch inside diameter pipe, having a length of approximately 12 inches so as to provide for carrying therein molecular sieve material having a length of, in one embodiment, at least 9 and ½ inches in order to obtain oxygen concentrations of greater than 90 per cent. The beds are sealed on their ends by end caps **82**, suitably bored or otherwise ported so as to cooperate with air conduit tubing forming the pneumatic circuit (not shown in FIG. **7** for clarity) and to allow for the fastening of the end caps onto the ends of the bed pipes for example by the use of elongate bolts **84** as seen in FIG. **7**. The Zeolite molecular sieve material **48** is sandwiched longitudinally within the cylindrical pipe housing of each bed between a pair of porous membranes **86**, themselves sandwiched between a pair of porous backing plates **88**. The sandwich of porous backing plates **88**, porous membranes **86**, and molecular sieve material **48** may be resiliently urged to one end of the bed by a resilient biasing means such as helical spring **90**. The porous membranes **86**, which may be felt porous backing material or other material to contain material of molecular sieve bed from passing through the openings of porous backing plates **88**, sized to cover the entire opening within the cylindrical beds. Porous backing plates **88** may be rigid plates having holes drilled therethrough. The end caps **82** may be sealed onto the ends of the piping forming the bed housings by means of O-rings **92**.

Compressor **66**, which may be a Thomas™ 8009DC compressor having its mounting plate removed and adapted to rotate the head ports by 180 degrees, or a Thomas™ 7006 series compressor as depicted in FIG. **8**, may be mounted into housing **60** by means of a resilient mounting plate **94** which may be of open cell high density foam or Sorbothane™ or other dampening material. A further resilient mounting plate **96**, which may also be of open cell high density foam may be employed to mount valve housing **68** into housing **60**. In the embodiment of FIG. **7**, valve and manifold housing **68** includes a series of 7 Humphrey™ **310** series 24 volt DC stand-alone valves bolted into side-by-side adjacent array by means of elongate bolts **98**. As depicted in FIG. **8**, the valves may also be Humphrey™ HK5 valves.

Valve and manifold housing **68** has an array of valves mounted adjacently as a block **68***a*, and conveniently disposed along the back side of the block is a reservoir and muffler manifold **68***b*. Air conduits lead into the muffler cavity, which may be a bore formed in manifold **68***b* and filled with sound-dampening material, for example cellulose fibre, and a conduit leads from the muffler to the compressor so as to supply air to the compressor. Further conduit then leads from the compressor into the valve block **68***a* so as to supply compressed air to the supply valves. Thus as seen in FIG. **8**, coupler **100** and its corresponding air conduit draw air from outside of the housing and feed it into muffler **102** shown in dotted outline. Muffler **102** may be accessed through end cap **104**, which may be threadably mounted into the end of the muffler bore. Air from the air intake coupler **100** passes through muffler **102** in direction F so as to exit through the muffler output coupler **106** and its corresponding air conduit which feeds air into compressor **66**, and in particular, into the compressor cylinder head **66***a*. Upon compression of the air by the operation of the compressor cylinder contained within the compressor cylinder head housing **66***a* by the operation of motor **66***b*, air is compressed and output through compressor output coupler **108** and its corresponding air conduit.

As better seen in FIG. **8***a*, which illustrates the front face of valve block **68***a*, seven air conduit couplers are provided. Without intending to be limiting in their arrangement, they are the bed **12** infeed coupler **110** between supply valve **24** and bed **12**, the common nitrogen vent coupler **112** which commonly vents from both nitrogen vent **26** and nitrogen vent **42**, the compressed air infeed coupler **114** from compressor **22**, the bed **14** infeed coupler **116** between bed **14** and supply valve **46**, the bed **12** outfeed coupler **118** between bed **12** and control valve **28**, bed **14** outfeed coupler **120** between bed **14** and control valve **40**, and the patient air flow coupler **122**. These couplers are illustrated in the diagram of FIG. **11** which also illustrates the common venting of nitrogen vents **26** and **42** through vent line **124** and the removal of the pressure relief valve of FIG. **3** as being unnecessary due to the switching on and off of compressor **22**. FIG. **11** also illustrates features of an alternative embodiment for valve and manifold housing **68**, and in particular valve and manifold housing **126** as illustrated in FIGS. **12–16**.

FIG. **11** also illustrates a further embodiment of the oxygen concentrator of the present invention. Rather than using an adjustable flow splitter **32** or an adjustable needle valve **36**, the proportion of oxygen-enriched air flow flowing in direction D through conduit **34** is regulated by a pre-set optimized orifice **128** which then flows through a check valve **130** into reservoir **132**. Outflow from reservoir **132** is controlled by demand valve **134**. The air flow then may split between air flow to the patient along conduit **136** and air flow to a pressure sensor (not shown) along conduit **138**. The sensor on conduit **138** may then be employed to sense when a patient is demanding a surge release of oxygen-enriched air from reservoir **132**. Thus when the patient creates a drop in pressure in conduit **136** such as would be caused by

suction applied to conduit **136**, the sensor detects the drop in pressure below a pre-set threshold and causes the processor to trigger the release of the reserve of oxygen-enriched air contained within reservoir **132**. In alternative embodiments, the reservoir may be large enough to contain a sufficient supply of oxygen-enriched air for more than one inhalation on demand by the patient through demand valve **134**.

This embodiment is reflected also in FIGS. **12–16** which illustrate a bored reservoir **132** bored into the manifold block **126***b* parallel to muffler **102**. As with the muffler, the reservoir may be bored and sealed using a threaded end cap **104**.

As seen in FIGS. **16** and **16***a*, it is intended to form part of the scope of the present invention that the molecular sieve beds **12**" and **14**" may be curved rather than linear. For example, the beds **12**" and **14**" may be curved along their length so as to better conformally fit about the waist of a user wearing them such as in FIG. **10**. End plates **69** may be bolted through bolt holes **71** to the frame or casing of the housing or beds respectively to seal the ends of the beds. The beds may be formed as a curved adjacent parallel pair of beds such as seen in FIG. **16** or, consistent with the previously described embodiments, be laterally spaced apart and parallel within a housing which would also then have a correspondingly curved surface to facilitate ease and comfort of wearing the oxygen concentrator of the present invention. In all such wearable embodiments, it may be that battery **72**, control switches such as the "on/off" switch, the air intake, the end-user air flow outlet and the like are mounted within the carrying media, such as a back pack, fanny pack etc., so as to be exposed from one end of the housing and from one side of the carrying media. Thus as seen in FIG. **10** the user has ease of access to the control functions and to the air flow outlet from which the air flow conduit extends for use.

As will be apparent to those skilled in the art in the light of the foregoing disclosure, many alterations and modifications are possible in the practice of this invention without departing from the spirit or scope thereof. Accordingly, the scope of the invention is to be construed in accordance with the substance defined by the following claims.

What is claimed is:

**1**. In an oxygen concentrator including:

an air compressor,

an air-tight first container in fluid communication with said compressor, through a first gas conduit, an air-tight second container in fluid communication with said first container through a second gas conduit,

wherein said first container contains a molecular sieve bed,

a gas flow controller controlling actuation of valves mounted to said gas conduits,

a gas flow splitter mounted to said second gas conduit for diverting a portion of said packet of incrementally oxygen-enriched air into a gas line for delivery of oxygen-enriched air to an end use downstream along said gas line,

said valves regulating air flow through said conduits, a method of oxygen enrichment comprising the sequential steps, in repeating cycles, of:

(a) preventing gas flow between said first and second containers and allowing compressed gas from said compressor into said first container during a first gas pressurization phase, whereby said first container is pressurized to a threshold pressure level to create a packet of incrementally oxygen-enriched air;

(b) preventing gas flow into said first container from said compressor and allowing gas flow from said first container into said second container during an air packet transfer phase, wherein said packet of incrementally oxygen-enriched air is transferred to said second container;

(c) preventing gas flow into said second container from said first container and allowing gas to vent to atmosphere out from said first container through a vent valve of said first container;

(d) allowing gas flow between said first and second containers from said second container into said first container during an air packet counter-flow phase, wherein said packet of incrementally oxygen-enriched air flows from said second container to said first container; and,

(e) preventing gas flow venting from said first container through said vent valve of said first container.

**2**. The method of claim **1**, wherein said oxygen concentrator further includes a molecular sieve bed in said second container and wherein said second container is in fluid communication with said compressor through a third conduit, further comprising the steps of:

(a) following said air packet transfer phase and following preventing gas flow into said second container from said first container, said gas flow controller allowing compressed gas from said compressor into said second container during a second gas pressurization phase, whereby said second container is pressurized to said threshold pressure level; and

(b) following preventing said gas flow from venting from said first container through said vent valve of said first container and following preventing gas flow between said first and second containers during said first gas pressurization phase, said gas flow controller allowing gas to vent to atmosphere out from said second container through a vent valve of said second container and preventing gas flow into said second container from said compressor.

**3**. The method of claim **2** wherein said gas flow controller is a processor cooperating with said compressor, further comprising the step of shutting off said compressor while gas flow from said compressor into both said first and second containers is prevented.

**4**. In a gas concentrator for enriching a target component gas concentration and minimizing a waste component gas concentration in a gas flow including:

an air compressor,

an air-tight first container in fluid communication with said compressor, through a first gas conduit, an air-tight second container in fluid communication with said first container through a second gas conduit,

wherein said first container contains a molecular sieve bed for adsorbing a waste component gas,

a gas flow controller controlling actuation of valves mounted to said gas conduits,

a gas flow splitter mounted to said second gas conduit for diverting a portion of said gas packet into a gas line for delivery of target component gas-enriched air to an end use downstream along said gas line,

said valves regulating air flow through said conduits, a method of oxygen enrichment comprising the sequential steps, in repeating cycles, of:

(a) preventing gas flow between said first and second containers and allowing compressed gas from said compressor into said first container during a first gas

pressurization phase, whereby said first container is pressurized to a threshold pressure level to create a gas packet having incrementally enriched target component gas concentration;

(b) preventing gas flow into said first container from said compressor and allowing gas flow from said first container into said second container during an air packet transfer phase, wherein said gas packet is transferred to said second container;

(c) preventing gas flow into said second container from said first container and allowing gas to vent to atmosphere out from said first container through a vent valve of said first container;

(d) allowing gas flow between said first and second containers from said second container into said first container during an air packet counter-flow phase, wherein said gas packet flows from said second container to said first container; and,

(e) preventing gas flow venting from said first container through said vent valve of said first container.

**5**. The method of claim **4**, wherein said gas concentrator further includes a molecular sieve bed in said second container and wherein said second container is in fluid communication with said compressor through a third conduit, further comprising the steps of:

(a) following said air packet transfer phase and following preventing gas flow into said second container from said first container, said gas flow controller allowing compressed gas from said compressor into said second container during a second gas pressurization phase, whereby said second container is pressurized to said threshold pressure level; and

(b) following preventing said gas flow from venting from said first container through said vent valve of said first container and following preventing gas flow between said first and second containers during said first gas pressurization phase, said gas flow controller allowing gas to vent to atmosphere out from said second container through a vent valve of said second container and preventing gas flow into said second container from said compressor.

**6**. The method of claim **5** wherein said gas flow controller is a processor cooperating with said compressor, further comprising the step of shutting off said compressor while gas flow from said compressor into both said first and second containers is prevented.

**7**. An oxygen concentrator for enriching an oxygen gas concentration and minimizing a nitrogen gas concentration in a gas flow comprising:

an air compressor,

an air-tight first container in fluid communication with said compressor, through a first gas conduit, an air-tight second container in fluid communication with said first container through a second gas conduit,

wherein said first container contains a molecular sieve bed for adsorbing nitrogen,

a gas flow controller controlling actuation of valves mounted to said gas conduits, said valves regulating air flow through said conduits so as to sequentially, in repeating cycles:

(a) prevent gas flow between said first and second containers and to allow compressed gas from said compressor into said first container during a first gas pressurization phase, whereby said first container is pressurized to a threshold pressure level to create a packet of incrementally oxygen-enriched air;

(b) prevent gas flow into said first container from said compressor and allow gas flow from said first container into said second container during an air packet transfer phase, wherein said packet of incrementally oxygen-enriched air is transferred to said second container;

(c) prevent gas flow into said second container from said first container and allow gas to vent to atmosphere out from said first container through a vent valve of said first container;

(d) allow gas flow between said first and second containers from said second container into said first container during an air packet counter-flow phase, wherein said packet of incrementally oxygen-enriched air flows from said second container to said first container; and,

(e) prevent gas flow venting from said first container through said vent valve of said first container,

a gas flow splitter mounted to said second gas conduit for diverting a portion of said packet of incrementally oxygen-enriched air into a gas line for delivery of oxygen-enriched air for an end use downstream along said gas line,

wherein both said first and second containers contain molecular sieve beds and wherein said second container is in fluid communication with said compressor through a third conduit,

and wherein said gas flow controller, following said air packet transfer phase and following preventing gas flow into said second container from said first container, allows compressed gas from said compressor into said second container during a second gas pressurization phase, whereby said second container is pressurized to said threshold pressure level,

and wherein said gas flow controller, following preventing said gas flow from venting from said first container through said vent valve of said first container and following preventing gas flow between said first and second containers during said first gas pressurization phase, allows gas to vent to atmosphere out from said second container through a vent valve of said second container and prevents gas flow into said second container from said compressor,

and wherein said gas flow controller is a processor cooperating with said compressor so as to shut off said compressor when gas flow from said compressor into both said first and second containers is prevented, and wherein both said processor and said compressor are battery powered by a battery, and wherein said first and second containers, said conduits, said valves, said processor, said compressor and said battery are mounted in a housing.

**8**. The device of claim **7** wherein said first and second containers are elongate hollow conduits and wherein said molecular sieve beds are Zeolite and wherein said first and second containers are generally parallel and mounted in said housing in parallel array.

**9**. The device of claim **8** wherein said array is spaced apart laterally relative to the length of said containers so as to define a channel therebetween.

**10**. The device of claim **9** wherein said processor and said compressor are mounted in said channel.

**11**. The device of claim **10** further comprising a valve and manifold housing mounted in said channel, said valves mounted to said valve and manifold housing, said valve and manifold housing having interconnecting manifolds for

interconnecting said valves to said first and second containers and said compressor via said gas conduits.

**12**. The device of claim **11** further comprising a gas reservoir in fluid communication with said gas flow splitter, said reservoir for containing a reserve of said oxygen-enriched air for delivery to said end use, and wherein one of said valves is a demand valve cooperating between said gas line and said reservoir for release of said reserve into said gas line upon a triggering event triggering actuation of said demand valve.

**13**. The device of claim **12** further comprising a pressure sensor cooperating with said gas line, wherein said triggering event is a drop in pressure in said gas line sensed by said pressure sensor, wherein said pressure sensor provides a triggering signal to trigger said actuation of said demand valve upon detecting said drop in pressure.

**14**. The device of claim **13** wherein said drop in pressure is to a pre-set lower threshold pressure, below which said pressure sensor provides said triggering signal.

**15**. The device of claim **14** wherein said compressor is run intermittently upon actuation signals from said processor so as to only run when required.

**16**. The device of claim **7** wherein said end use is oxygen supply to an end user, and wherein said first and second containers are elongate and curved along their length so as to conform to a body shape of said end user when said oxygen concentrator is worn by said end user.

**17**. The device of claim **7** wherein said end use is oxygen supply to an end user, and wherein said first and second containers are elongate and curved along their length so as to conform to a body shape of said end user when said oxygen concentrator is worn by said end user.

**18**. The device of claim **7** wherein said end use is oxygen supply to an end user and wherein said oxygen concentrator is adapted to be worn by said end user.

**19**. A gas concentrator for enriching a target component gas concentration and minimizing a waste component gas concentration in a gas flow comprising:

an air compressor,

an air-tight first container in fluid communication with said compressor, through a first gas conduit, an air-tight second container in fluid communication with said first container through a second gas conduit,

wherein said first container contains a molecular sieve bed for adsorbing a waste component gas,

a gas flow controller controlling actuation of valves mounted to said gas conduits, said valves regulating air flow through said conduits so as to sequentially, in repeating cycles:

(a) prevent gas flow between said first and second containers and to allow compressed gas from said compressor into said first container during a first gas pressurization phase, whereby said first container is pressurized to a threshold pressure level to create a gas packet having an incrementally enriched target component gas concentration;

(b) prevent gas flow into said first container from said compressor and allow gas flow from said first container into said second container during an air packet transfer phase, wherein said gas packet is transferred to said second container;

(c) prevent gas flow into said second container from said first container and allow gas to vent to atmosphere out from said first container through a vent valve of said first container;

(d) allow gas flow between said first and second containers from said second container into said first container during an air packet counter-flow phase, wherein said gas packet flows from said second container to said first container; and,

(e) prevent gas flow venting from said first container through said vent valve of said first container,

a gas flow splitter mounted to said second gas conduit for diverting a portion of said gas packet into a gas line for delivery of target component gas-enriched air for an end use downstream along said gas line,

wherein both said first and second containers contain molecular sieve beds and wherein said second container is in fluid communication with said compressor through a third conduit,

and wherein said gas flow controller, following said air packet transfer phase and following preventing gas flow into said second container from said first container, allows compressed gas from said compressor into said second container during a second gas pressurization phase, whereby said second container is pressurized to said threshold pressure level,

and wherein said gas flow controller, following preventing said gas flow from venting from said first container through said vent valve of said first container and following preventing gas flow between said first and second containers during said first gas pressurization phase, allows gas to vent to atmosphere out from said second container through a vent valve of said second container and prevents gas flow into said second container from said compressor,

and wherein said gas flow controller is a processor cooperating with said compressor so as to shut off said compressor when gas flow from said compressor into both said first and second containers is prevented, and wherein both said processor and said compressor are battery powered by a battery, and wherein said first and second containers, said conduits, said valves, said processor, said compressor and said battery are mounted in a housing.

**20**. The device of claim **19** wherein said first and second containers are elongate hollow conduits and wherein said first and second containers are generally parallel and mounted in said housing in parallel array.

**21**. The device of claim **20** wherein said array is spaced apart laterally relative to the length of said containers so as to define a channel therebetween.

**22**. The device of claim **21** wherein said processor and said compressor are mounted in said channel.

**23**. The device of claim **22** further comprising a valve and manifold housing mounted in said channel, said valves mounted to said valve and manifold housing, said valve and manifold housing having interconnecting manifolds for interconnecting said valves to said first and second containers and said compressor via said gas conduits.

**24**. The device of claim **23** further comprising a gas reservoir in fluid communication with said gas flow splitter, said reservoir for containing a reserve of said target component gas-enriched air for delivery to said end use, and wherein one of said valves is a demand valve cooperating between said gas line and said reservoir for release of said reserve into said gas line upon a triggering event triggering actuation of said demand valve.

**25**. The device of claim **24** further comprising a pressure sensor cooperating with said gas line, wherein said triggering event is a drop in pressure in said gas line sensed by said pressure sensor, wherein said pressure sensor provides a triggering signal to trigger said actuation of said demand valve upon detecting said drop in pressure.

**26**. The device of claim **25** wherein said drop in pressure is to a pre-set lower threshold pressure, below which said pressure sensor provides said triggering signal.

**27**. The device of claim **26** wherein said compressor is run intermittently upon actuation signals from said processor so as to only run when required.

**28**. The device of claim **19** wherein said end use is oxygen supply to an end user, and wherein said first and second containers are elongate and curved along their length so as to conform to a body shape of said end user when said gas concentrator is worn by said end user.

**29**. The device of claim **19** wherein said end use is oxygen supply to an end user, and wherein said first and second containers are elongate and curved along their length so as to conform to a body shape of said end user when said oxygen concentrator is worn by said end user.

**30**. The device of claim **19** wherein said end use is oxygen supply to an end user and wherein said oxygen concentrator is adapted to be worn by said end user.

* * * * *