US006691702B2

(12) **United States Patent**
Appel et al.

(10) **Patent No.: US 6,691,702 B2**
(45) **Date of Patent: *Feb. 17, 2004**

(54) **PORTABLE OXYGEN CONCENTRATION SYSTEM AND METHOD OF USING THE SAME**

(75) Inventors: **William Scot Appel**, San Diego, CA (US); **David Phillip Winter**, Encinitas, CA (US); **Brian Kenneth Sward**, San Diego, CA (US); **Masato Sugano**, Tokyo (JP); **Edmund Salter**, Oceanside, CA (US); **James A. Bixby**, La Jolla, CA (US)

(73) Assignees: **SeQual Technologies, Inc.**, San Diego, CA (US); **Teijin Limited**, Osaka (JP)

(*) Notice: Subject to any disclaimer, the term of this patent is extended or adjusted under 35 U.S.C. 154(b) by 0 days.

This patent is subject to a terminal disclaimer.

(21) Appl. No.: **10/134,868**

(22) Filed: **Apr. 29, 2002**

(65) **Prior Publication Data**

US 2003/0005928 A1 Jan. 9, 2003

Related U.S. Application Data

(63) Continuation-in-part of application No. 09/632,099, filed on Aug. 3, 2000.

(51) **Int. Cl.**[7] **A61M 15/00**; A61M 16/00; A62B 7/08; A62B 21/00

(52) **U.S. Cl.** **128/202.26**; 128/201.25; 128/205.11; 128/204.22

(58) **Field of Search** 128/201.25, 205.11, 128/205.18, 204.17, 204.22, 204.21, 202.26, 205.12, 204.18, 204.23, 204.26; 251/283

(56) **References Cited**

U.S. PATENT DOCUMENTS

4,077,779 A 3/1978 Sircar

4,469,494 A 9/1984 Van Weenen

(List continued on next page.)

FOREIGN PATENT DOCUMENTS

DE	197 07 097	A1	2/1997
EP	0 266 051	A1	9/1987
EP	0 757 919	A1	2/1997
EP	0 312 910	A1	10/1998
EP	0 875 277	A1	11/1998
EP	0 884 086	A2	12/1998
EP	0 884 088	A1	12/1998
EP	0 884 086	A3	1/1999
EP	1 044 714	A1	10/2000
EP	1 044 715	A1	10/2000
GB	2 164 568	A	3/1986
WO	WO 97/32692		9/1997

OTHER PUBLICATIONS

Patent Abstracts from Japan; vol. 2000; No. 02; 29 Feb. 29, 2000 and JP 11 319095A (Sumitomo Bakelite Co., Ltd.); Nov. 24, 1999; Abstract.

Primary Examiner—Weilun Lo
Assistant Examiner—Michael G. Mendoza
(74) *Attorney, Agent, or Firm*—Procopio, Cory, Hargreaves & Savitch, LLP

(57) **ABSTRACT**

A portable oxygen concentrator system adapted to be readily transported by a user includes a rechargeable energy source and a concentrator powered by the energy source. The concentrator converts ambient air into concentrated oxygen gas for the user and includes a plurality of adsorption beds and a rotary valve assembly. The rotary valve assembly is relatively rotatable with respect to the plurality of adsorption beds to provide valving action for selectively transferring fluids through the plurality of adsorption beds for converting ambient air into concentrated oxygen gas for the user. The ratio of adiabatic power to oxygen flow for the concentrator is in the range of 6.2 W/LPM to 23.0 W/LPM.

34 Claims, 17 Drawing Sheets

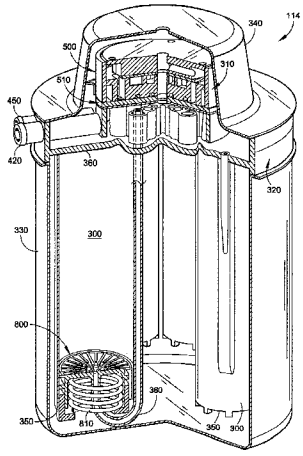

U.S. PATENT DOCUMENTS

4,477,264 A 10/1984 Kratz et al.
4,491,459 A 1/1985 Pinkerton
4,576,616 A * 3/1986 Mottram et al. 95/96
4,801,308 A 1/1989 Keefer
4,859,217 A 8/1989 Chao
4,925,464 A 5/1990 Rabenau et al.
4,968,329 A 11/1990 Keefer
4,971,609 A 11/1990 Pawlos
5,074,892 A 12/1991 Leavitt
5,112,367 A 5/1992 Hill
5,114,441 A 5/1992 Kanner et al.
5,268,021 A * 12/1993 Hill et al. 95/98
5,366,541 A * 11/1994 Hill et al. 96/124
5,413,625 A 5/1995 Chao et al.
RE35,099 E 11/1995 Hill
5,593,478 A * 1/1997 Hill et al. 96/111
5,626,151 A 5/1997 Linden
5,730,778 A * 3/1998 Hill et al. 95/12
5,807,423 A 9/1998 Lemcoff et al.
5,814,130 A 9/1998 Lemcoff et al.
5,814,131 A 9/1998 Lemcoff et al.
5,820,656 A 10/1998 Lemcoff et al.
5,827,358 A * 10/1998 Kulish et al. 96/115
5,882,380 A * 3/1999 Sircar 95/98
5,890,490 A 4/1999 Aylsworth et al.
5,891,217 A 4/1999 Lemcoff et al.
5,893,944 A 4/1999 Dong
5,912,422 A 6/1999 Bomard et al.
5,928,189 A 7/1999 Phillips
6,010,317 A 1/2000 Maget
6,010,555 A 1/2000 Smolarek et al.
6,051,050 A 4/2000 Keefer et al.
6,056,804 A * 5/2000 Keefer et al. 95/96
6,068,680 A * 5/2000 Kulish et al. 95/98
6,143,056 A 11/2000 Smolarek et al.
6,152,991 A 11/2000 Ackley
6,176,897 B1 * 1/2001 Keefer 95/98
6,253,778 B1 7/2001 Smolarek et al.
6,311,719 B1 * 11/2001 Hill et al. 137/312
6,346,139 B1 2/2002 Czabala
6,395,065 B1 * 5/2002 Murdoch et al. 95/22
6,471,744 B1 * 10/2002 Hill 95/19
6,514,319 B2 * 2/2003 Keefer et al. 95/101
6,521,562 B1 * 2/2003 Clem et al. 502/214
6,551,384 B1 * 4/2003 Ackley et al. 95/96
2001/0023640 A1 9/2001 Keefer

* cited by examiner

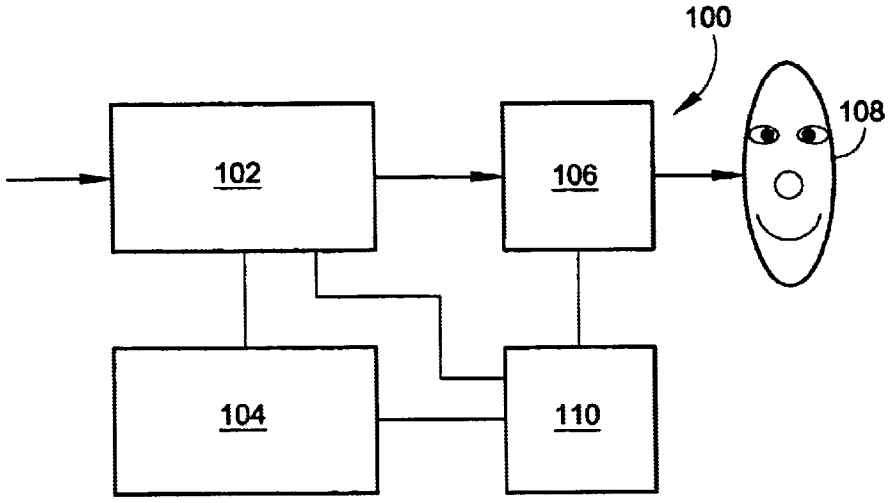
100
102
106
108
104
110

FIG. 1

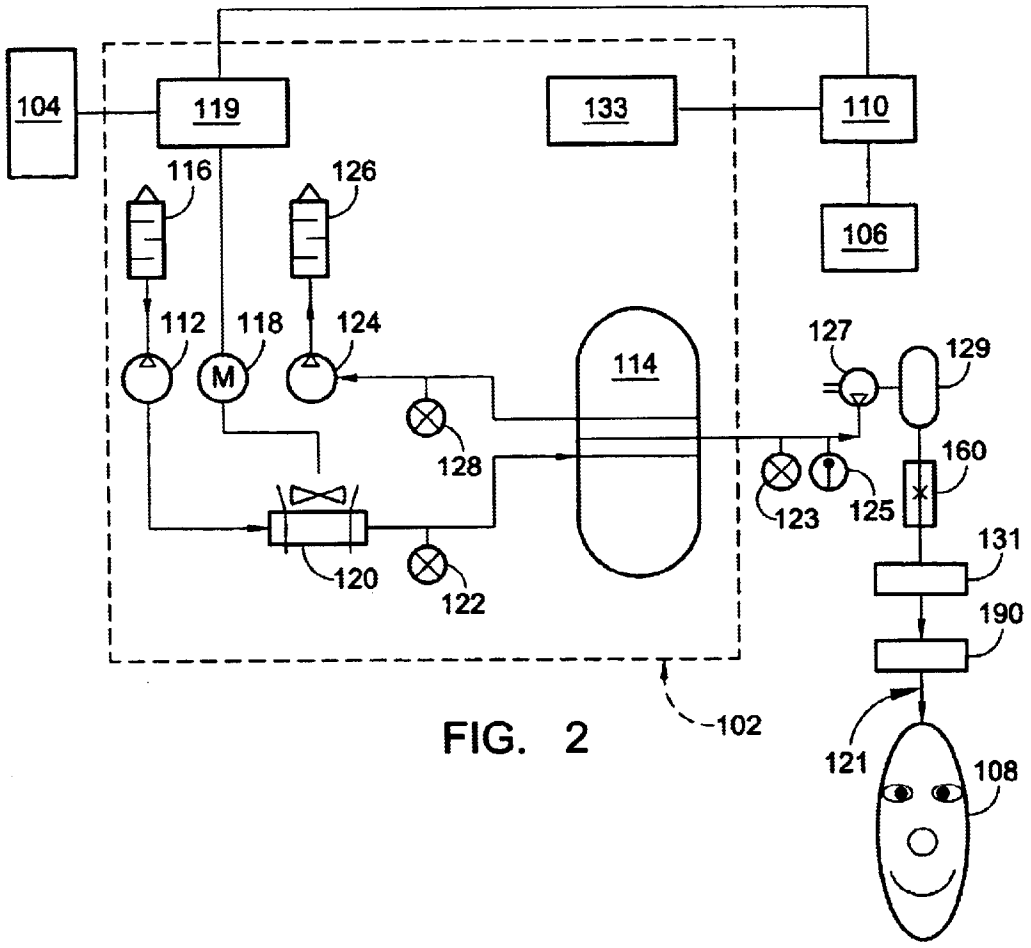
104
119
133
110
116
126
106
112
118
124
114
127
129
M
128
160
123
125
131
120
122
190
102
121
108

FIG. 2

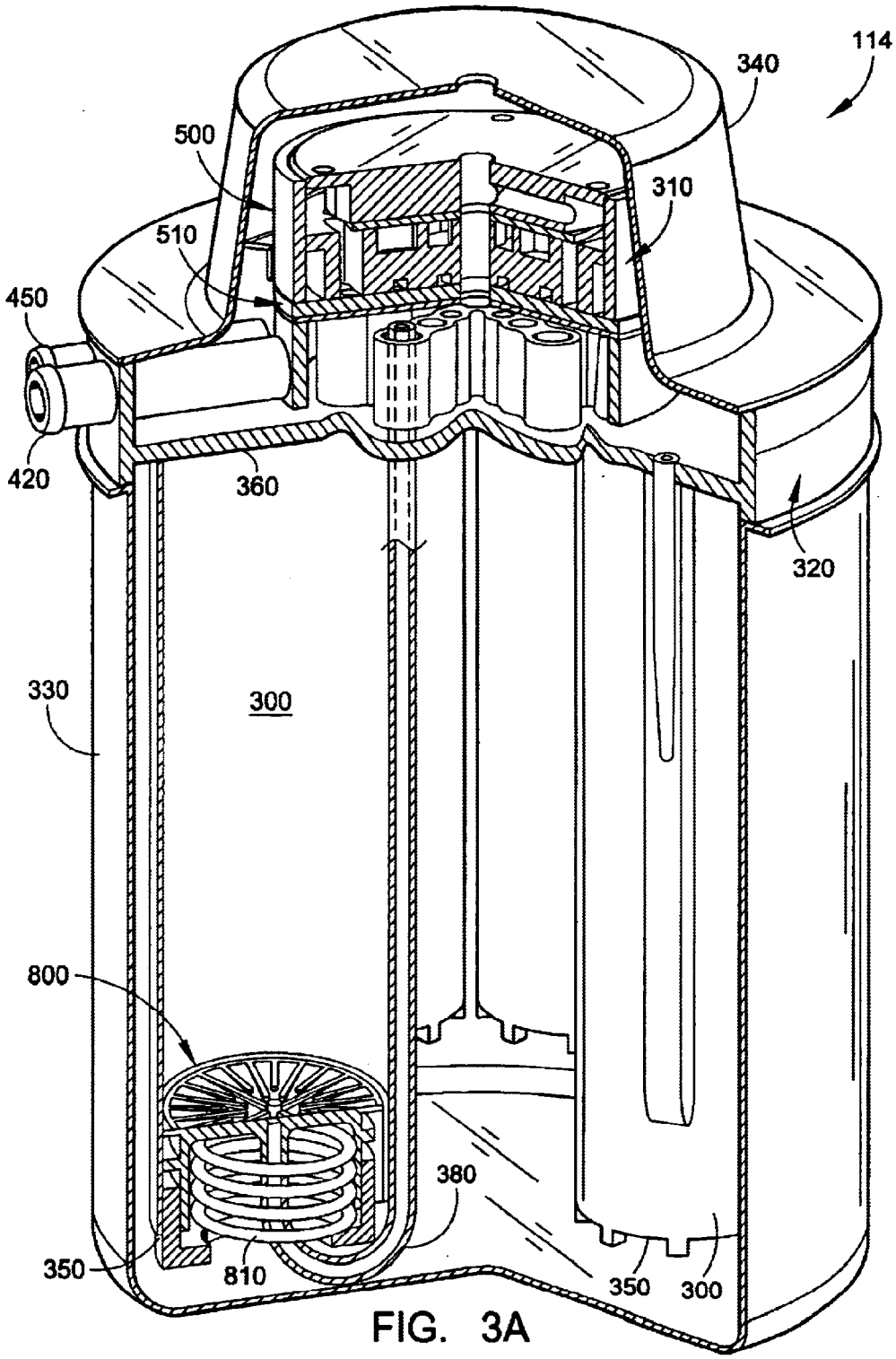
114
340
500
310
510
450
420
360
320
330
300
800
380
350
810
350
300

FIG. 3A

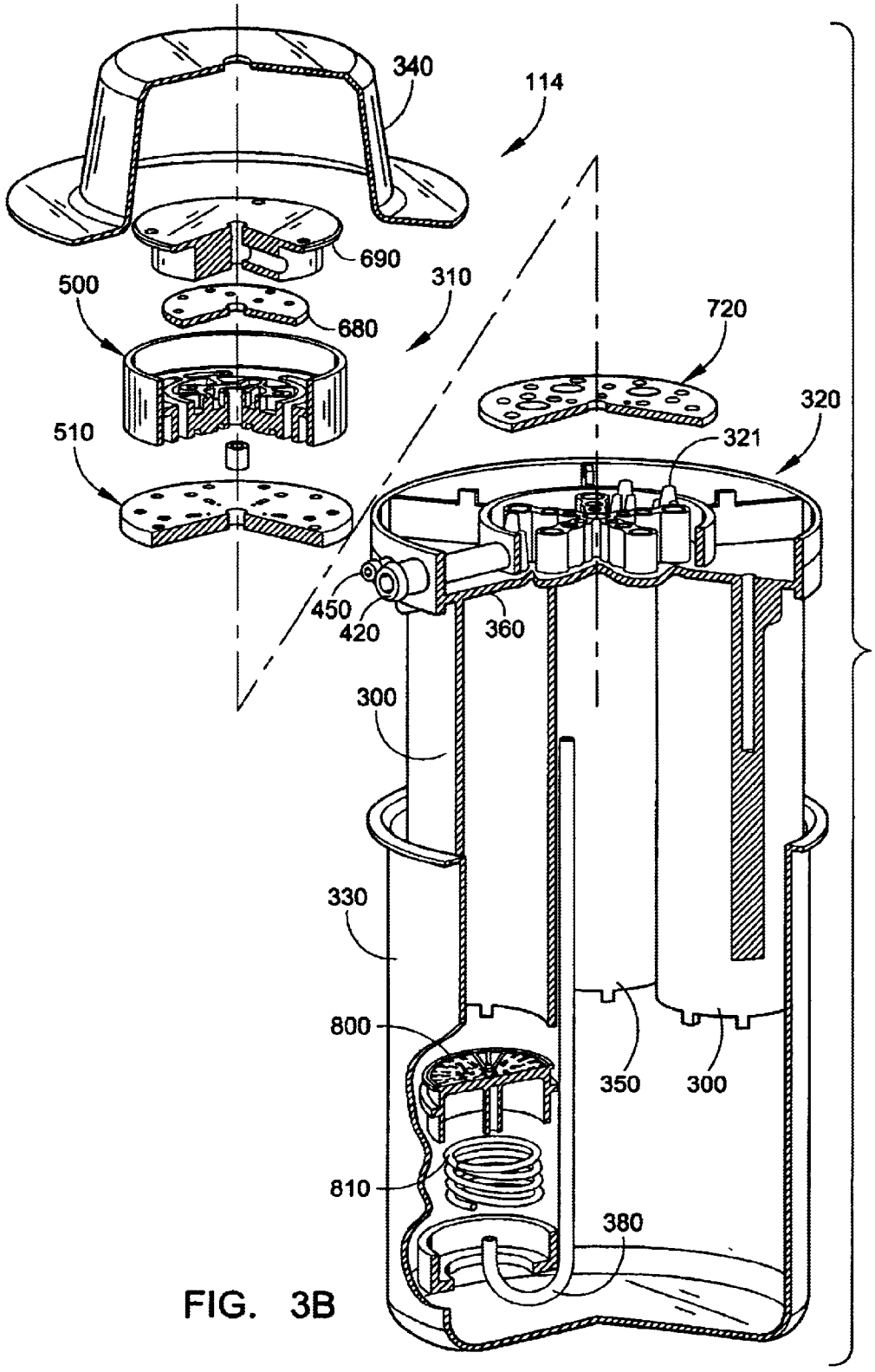
340
114
690
310
500
680
720
320
510
321
450
420
360
300
330
800
350
300
810
380

FIG. 3B

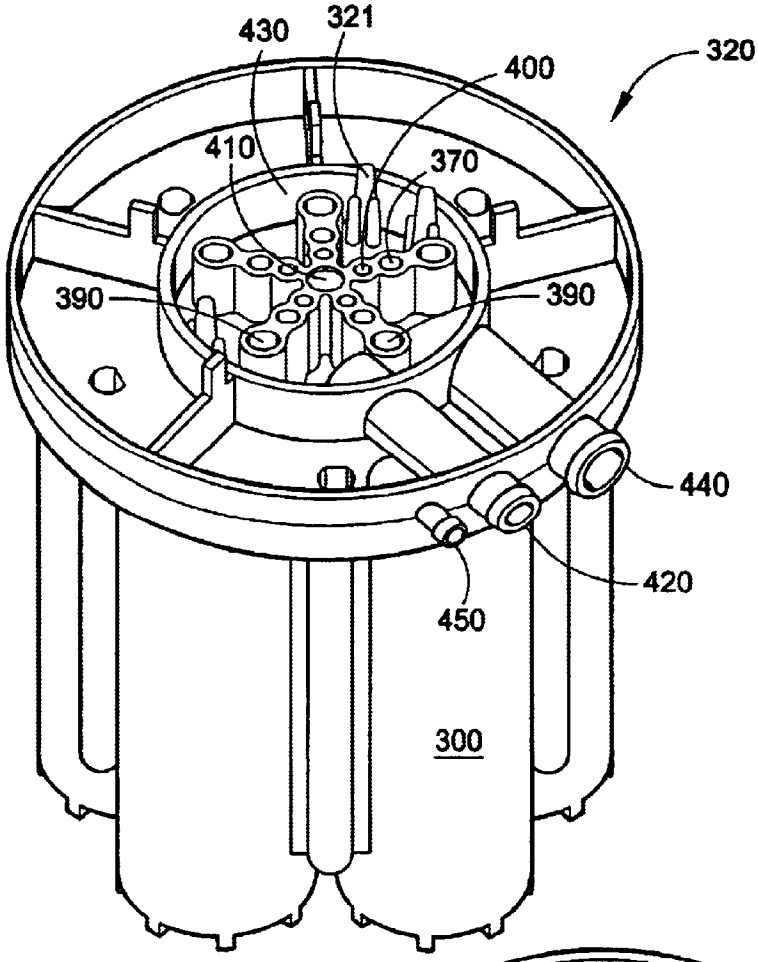
430
321
400
320
410
370
390
390
440
420
450
300

FIG. 4

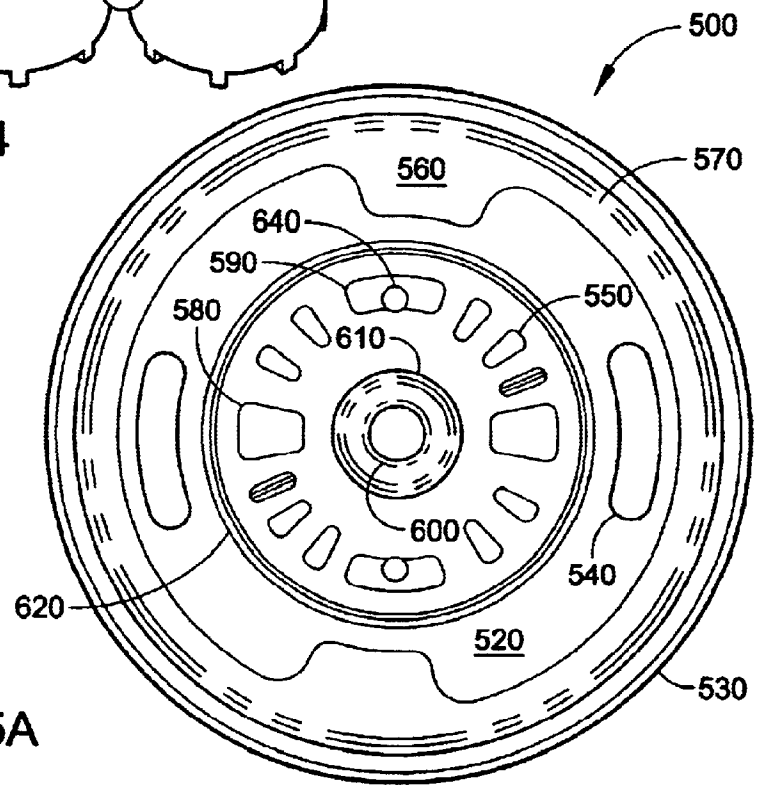
500
560
570
640
590
550
580
610
600
540
620
520
530

FIG. 5A

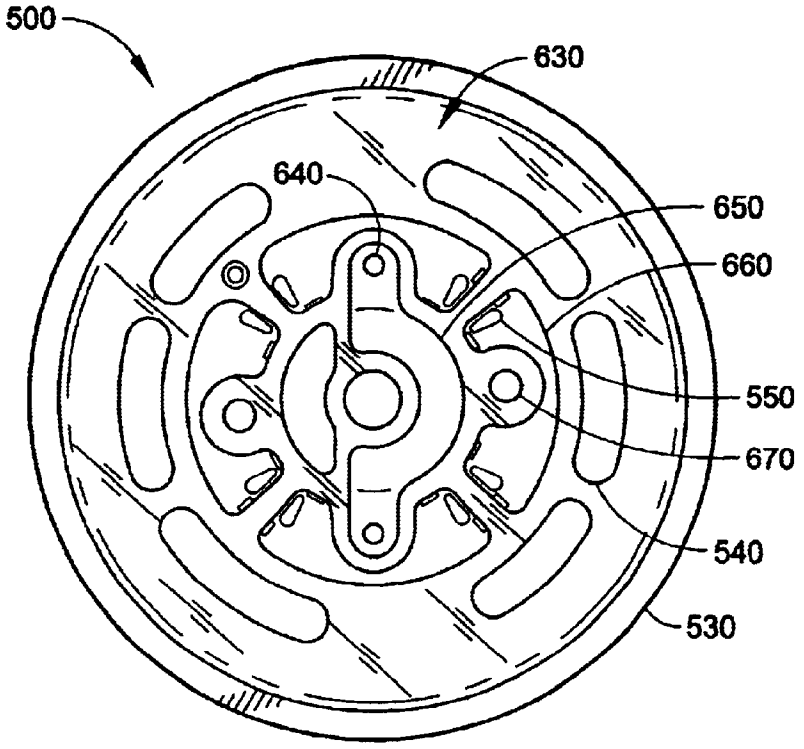
500
630
640
650
660
550
670
540
530

FIG. 5B

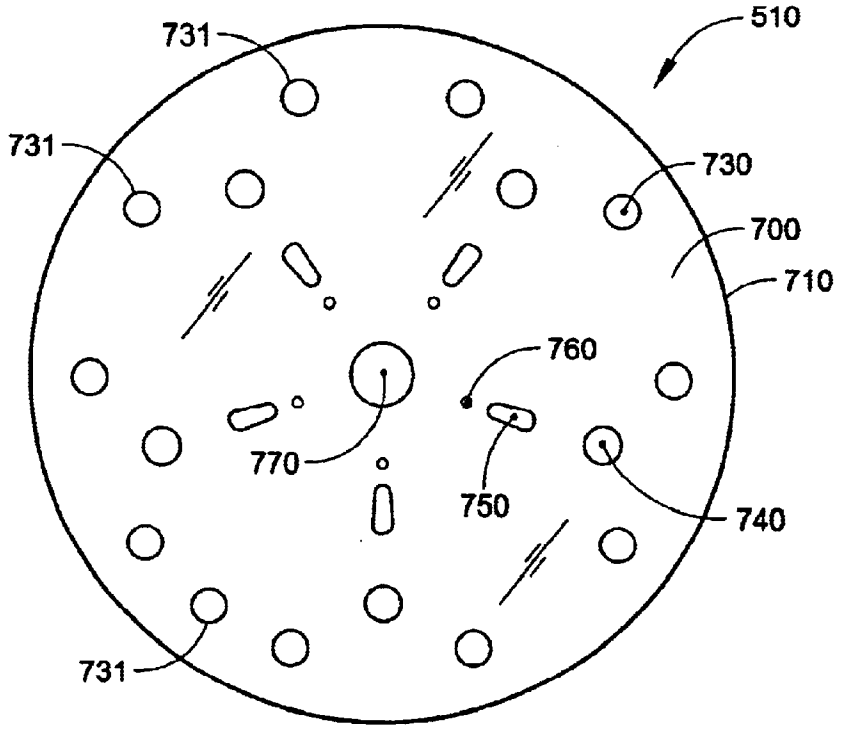
510
731
731
730
700
710
760
770
750
740
731

FIG. 6A

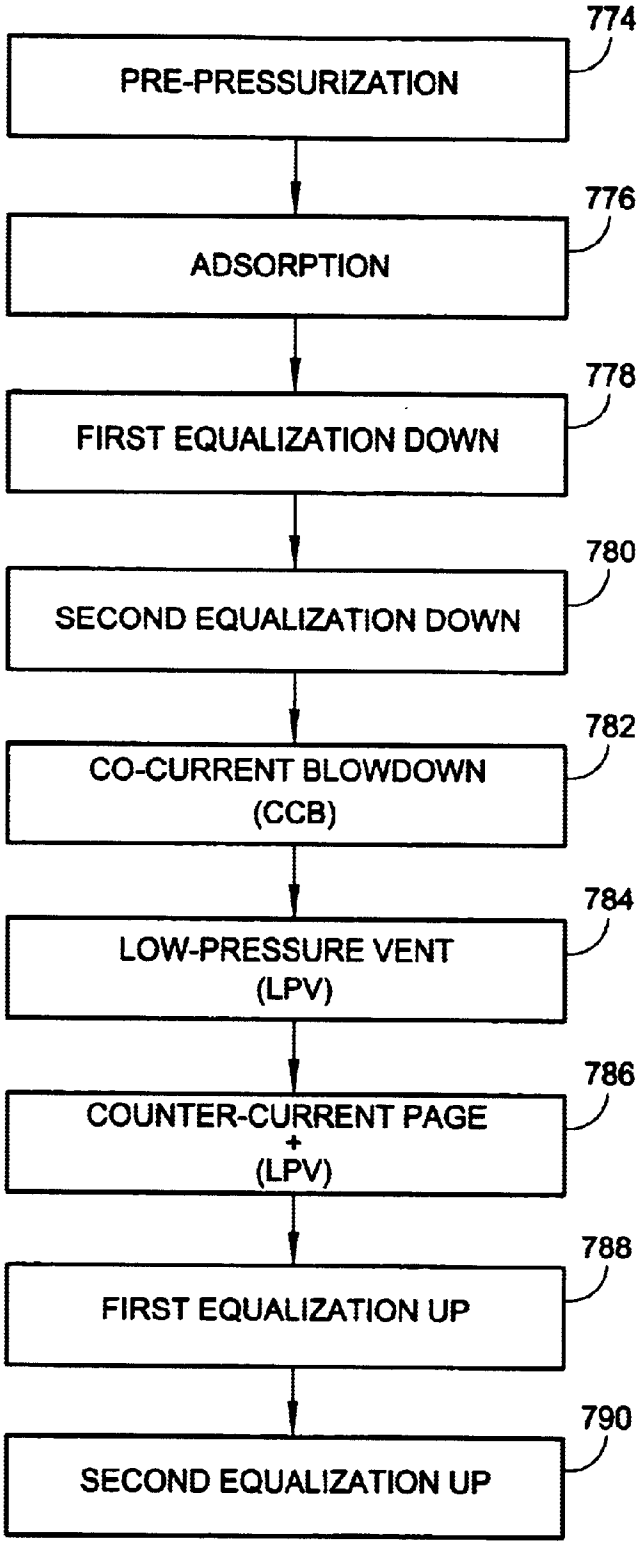
774
PRE-PRESSURIZATION
776
ADSORPTION
778
FIRST EQUALIZATION DOWN
780
SECOND EQUALIZATION DOWN
782
CO-CURRENT BLOWDOWN
(CCB)
784
LOW-PRESSURE VENT
(LPV)
786
COUNTER-CURRENT PAGE
+
(LPV)
788
FIRST EQUALIZATION UP
790
SECOND EQUALIZATION UP

FIG. 6B

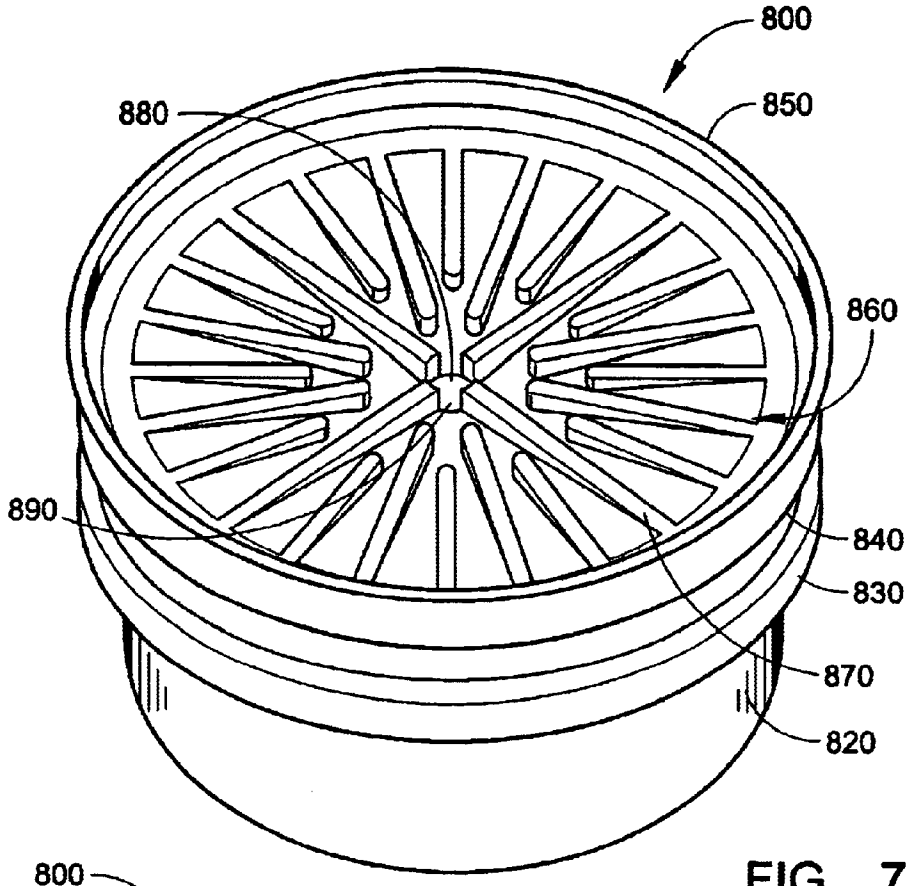

FIG. 7A

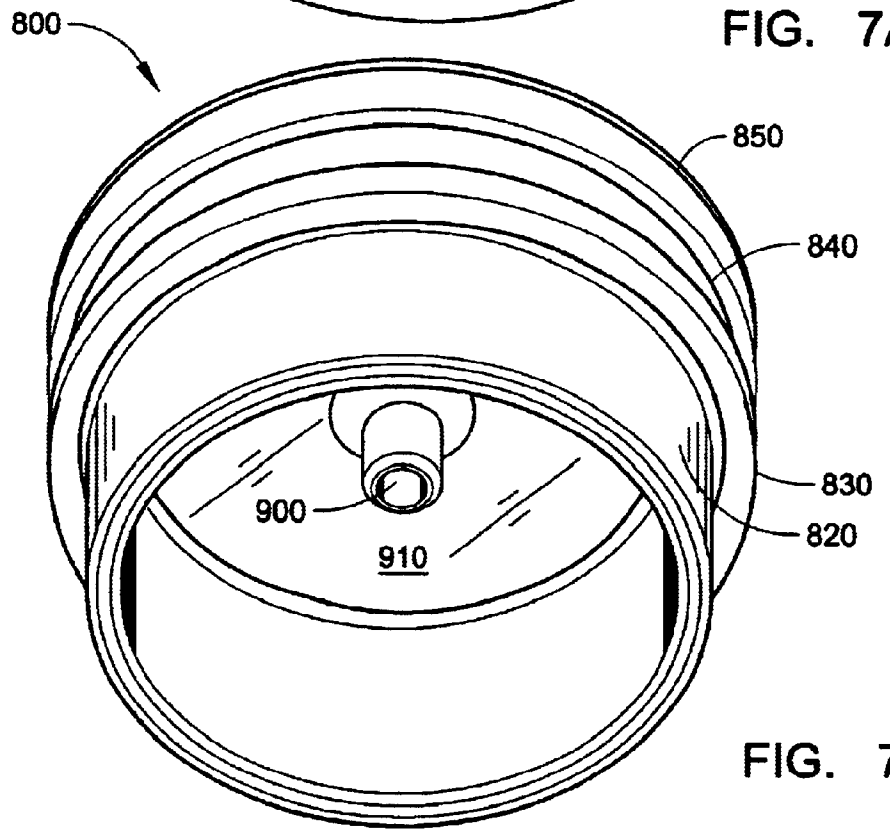

FIG. 7B

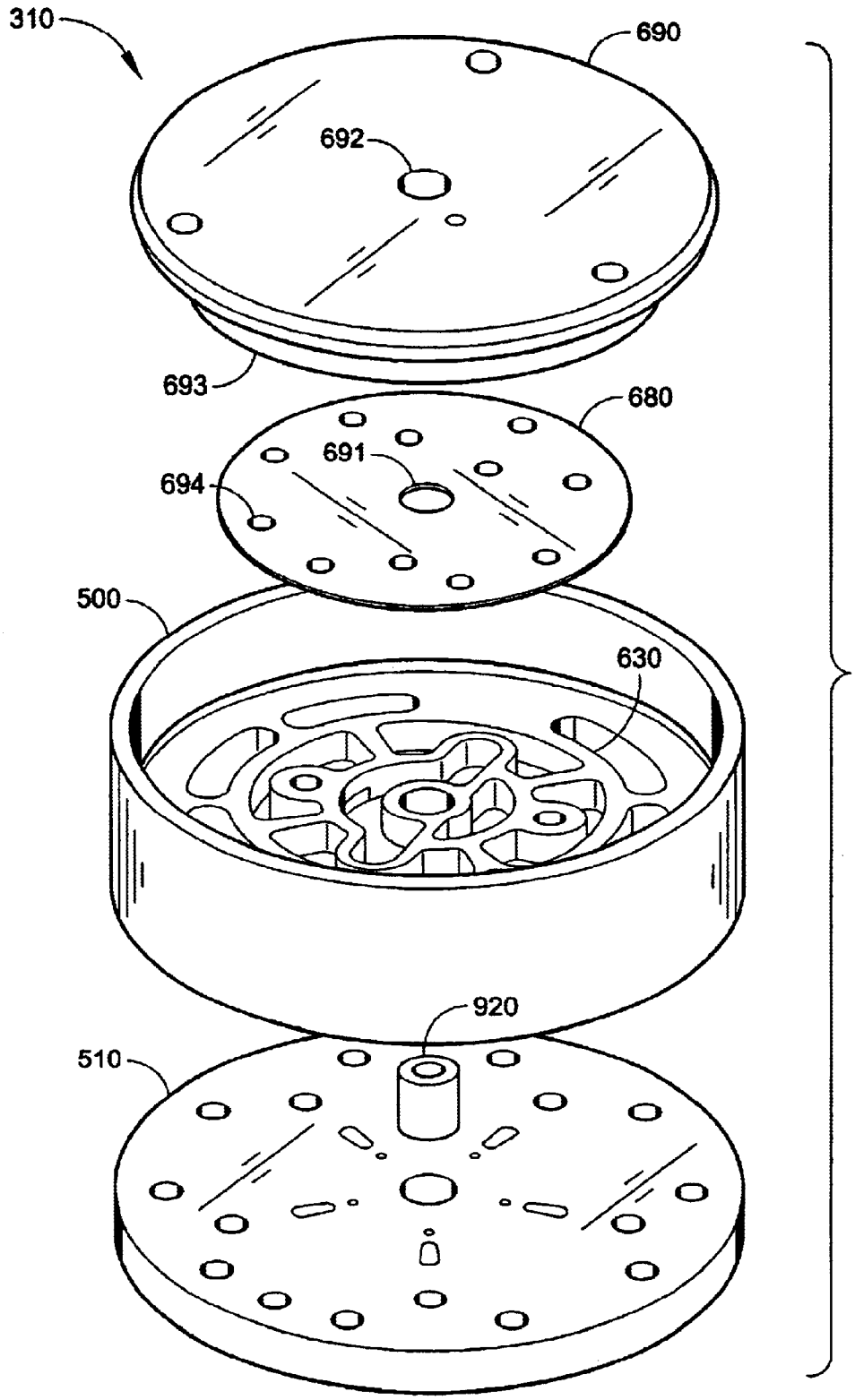

FIG. 8A

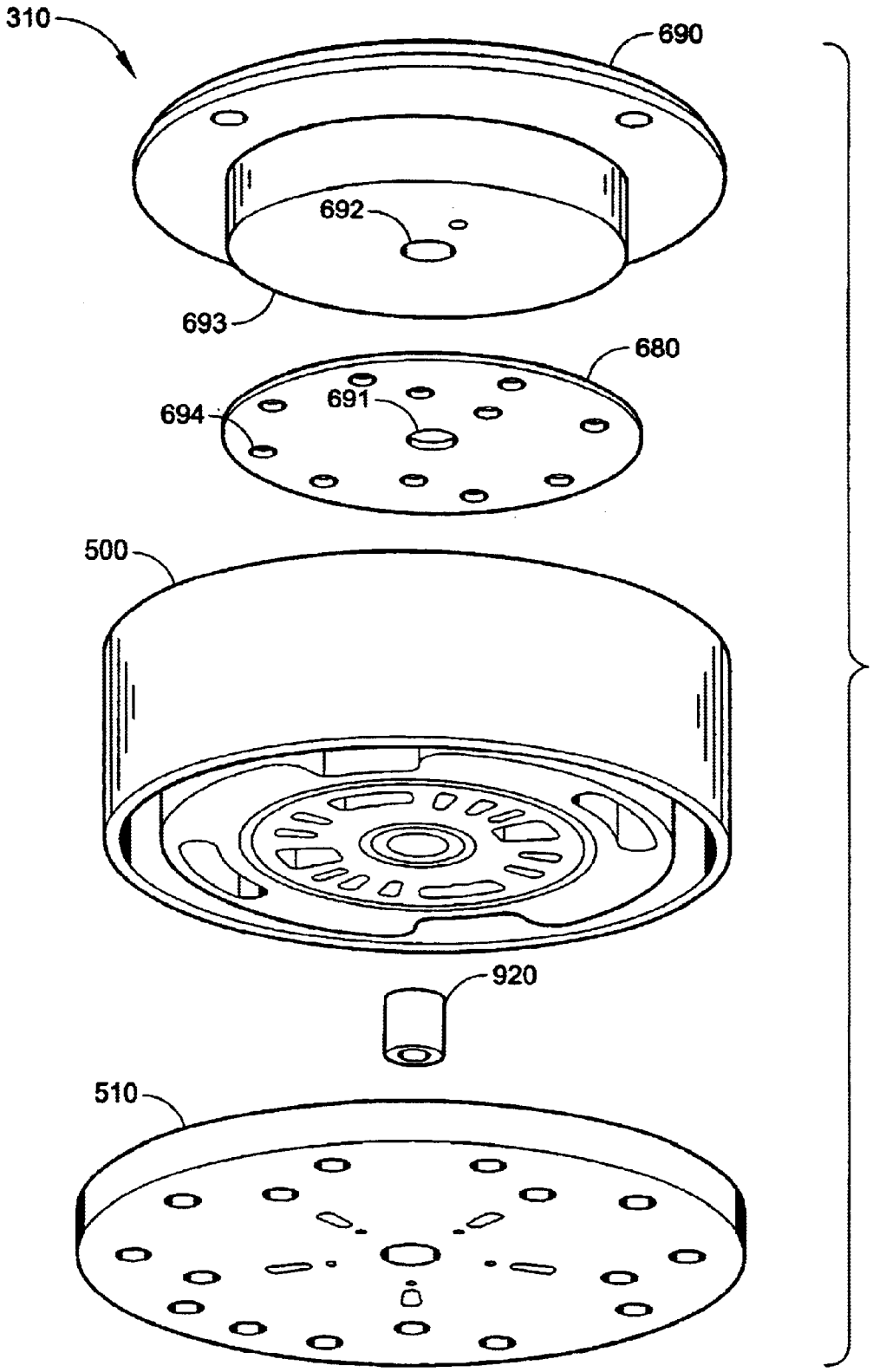

FIG. 8B

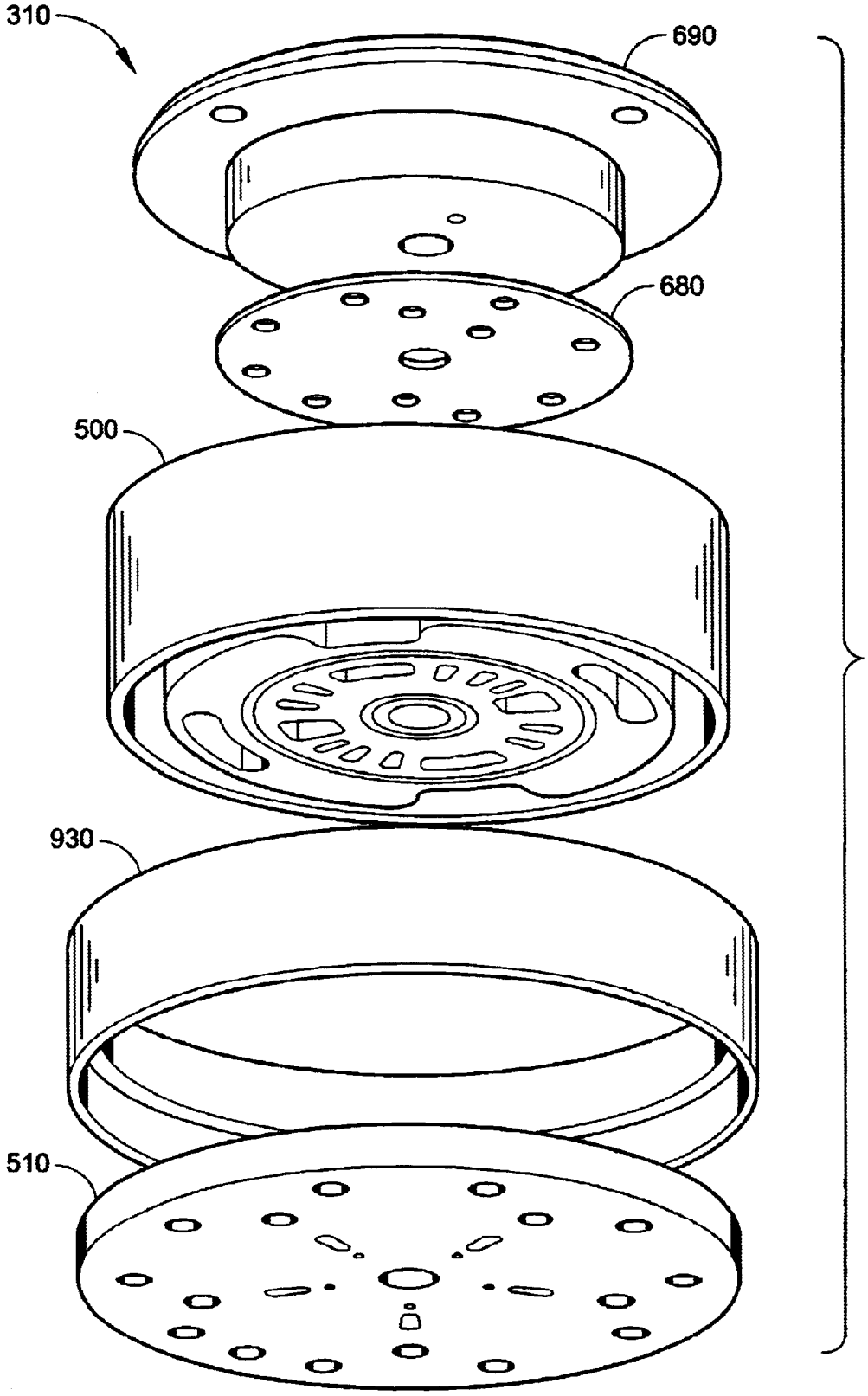

FIG. 9A

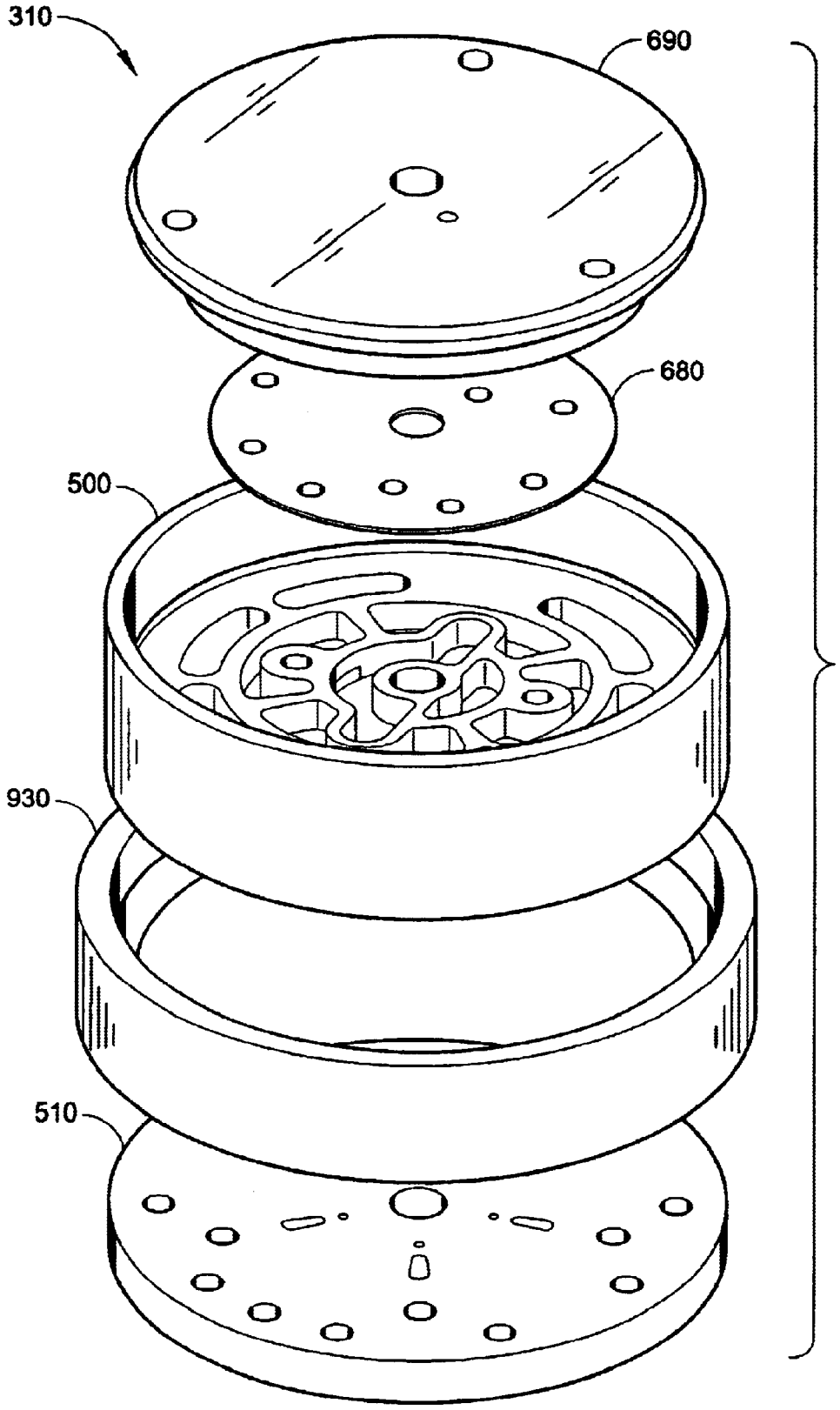

FIG. 9B

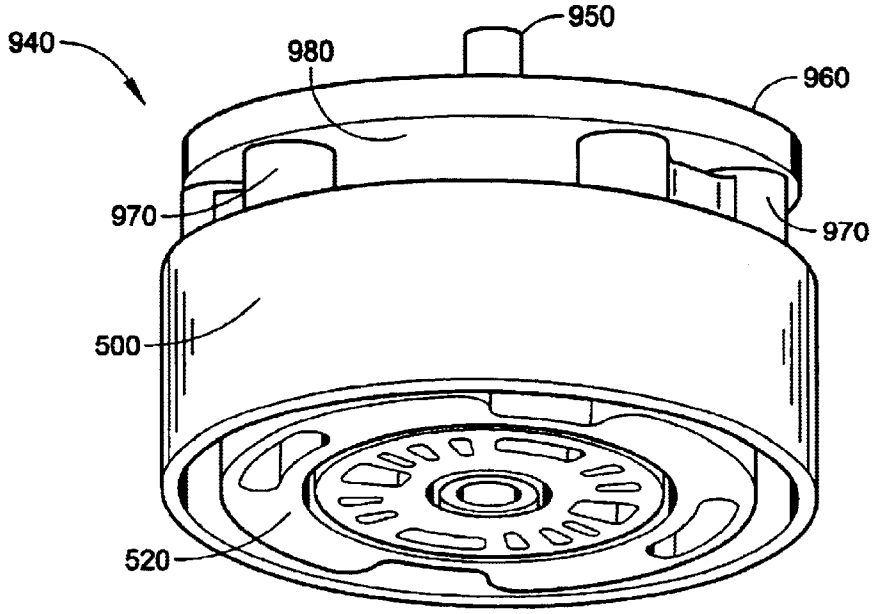

FIG. 10A

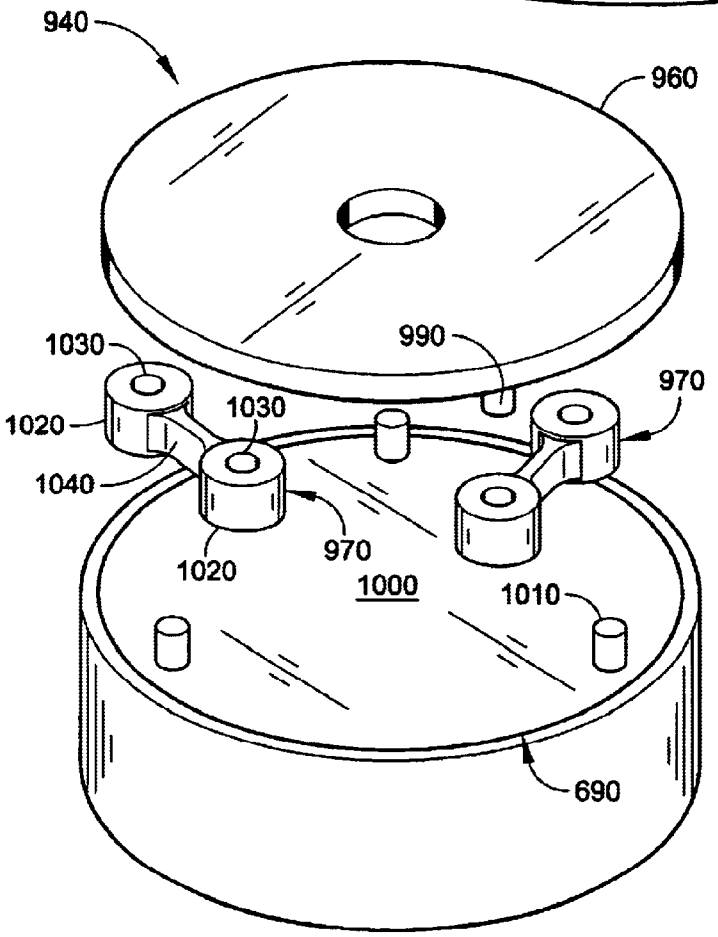

FIG. 10B

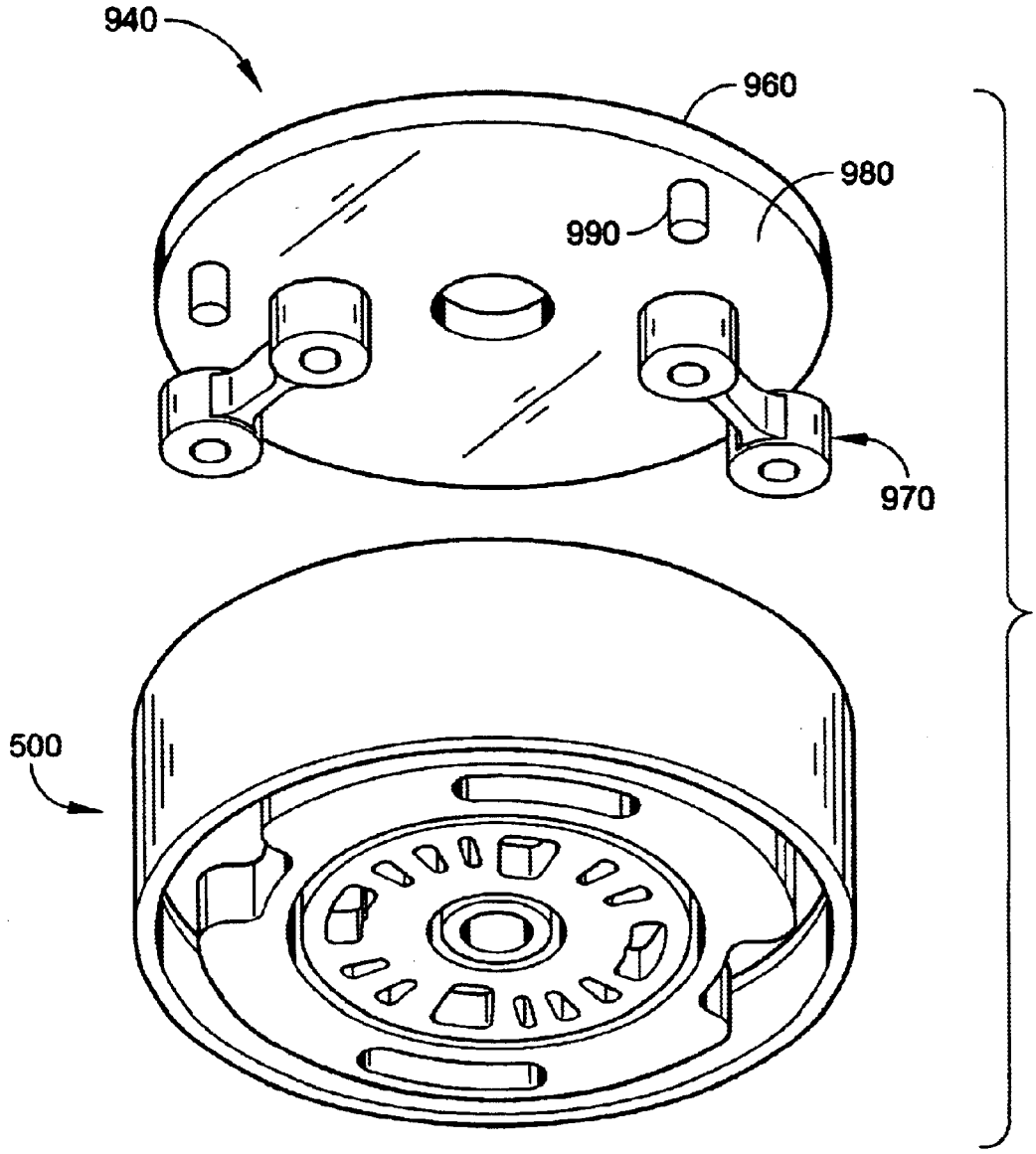

FIG. 10C

PRODUCT FLOW RATE (slpm)	RECOVERY (%)	PRODUCT PURITY (%)	FEED PRESSURE (psig)	VACUUM PRESSURE (psig)	FLOW RATE (slpm)		ADIABATIC WORK (W)*		
					COMP.	VACUUM	COMP.	VACUUM	TOTAL
3.0	55.1	91.7	7.7	-7.0	23.8	20.8	17.9	20.6	38.5
3.0	53.6	90.4	7.2	-7.0	24.1	21.1	17.1	21.2	38.3
3.0	53.6	90.9	7.2	-7.0	24.2	21.2	17.2	21.2	38.4
1.0	54.6	91.6	9.0	-7.0	8.0	7.0	6.9	7.0	13.9
2.0	57.2	92.0	10.6	-7.0	15.3	13.3	15.2	13.3	28.4
3.0	54.9	92.3	9.6	-7.5	24.0	21.0	21.8	22.9	44.7
2.8	51.7	93.6	10.1	-7.4	24.1	21.3	22.9	22.8	45.8
2.5	46.3	94.5	10.3	-7.5	24.3	21.8	23.5	23.8	47.2
3.2	56.3	90.7	9.9	-7.5	24.6	21.4	23.0	23.3	46.3
3.4	58.4	88.0	9.9	-7.0	24.4	21.0	22.8	20.9	43.7
2.0	46.9	94.7	12.1	-7.1	19.3	17.3	21.3	17.5	38.8
2.2	51.3	94.3	11.9	-7.2	19.3	17.1	21.0	17.6	38.6
2.4	55.6	93.6	11.7	-7.3	19.3	16.9	20.8	17.7	38.5
2.5	57.9	92.7	11.1	-7.3	19.1	16.6	19.7	17.4	37.1
2.8	61.8	89.0	11.3	-7.2	19.2	16.4	20.0	16.9	37.0
1.5	58.1	94.3	10.8	-7.2	11.2	9.8	11.3	10.1	21.4
1.5	59.9	94.0	10.8	-7.2	11.2	9.7	11.3	10.0	21.3
1.6	67.3	90.1	10.4	-7.3	11.2	9.4	10.9	9.9	20.8
1.0	64.0	94.1	9.0	-7.2	7.0	6.0	6.1	6.2	12.3
1.2	70.4	86.3	8.5	-7.4	7.0	5.8	5.8	6.2	12.0
1.1	68.1	90.3	8.7	-7.3	7.0	5.9	5.8	6.2	12.0
2.5	45.5	94.4	9.5	-6.1	24.7	22.2	22.3	18.8	41.1
2.8	50.5	93.7	9.7	-6.2	24.8	22.0	22.8	18.9	41.7
3.0	54.1	92.5	10.1	-6.3	24.4	21.4	23.2	18.6	41.8
3.2	56.3	90.7	9.9	-6.4	24.6	21.4	22.9	18.8	41.7
3.5	59.2	87.4	9.7	-6.4	24.6	21.1	22.7	18.8	41.5
1.0	46.0	90.9	5.8	-5.3	9.4	8.4	5.5	5.9	11.5
2.0	47.8	90.5	6.7	-5.4	18.0	16.0	12.0	11.6	23.6
3.0	48.2	90.7	10.1	-5.6	26.9	23.9	25.6	17.9	43.5
1.0	52.3	92.3	5.7	-6.1	8.4	7.4	4.9	6.1	11.0
1.0	51.3	91.1	5.3	-6.0	8.5	7.5	4.6	6.2	10.8
2.0	51.6	92.4	7.3	-5.9	17.1	15.1	12.2	12.2	24.4
2.0	52.4	91.5	7.1	-5.9	16.6	14.6	11.7	11.8	23.5
3.0	48.6	89.9	8.5	-5.8	26.4	23.4	21.8	18.3	40.1
3.0	48.9	90.7	8.8	-5.8	26.5	23.5	22.6	18.4	40.9

FIG. 11

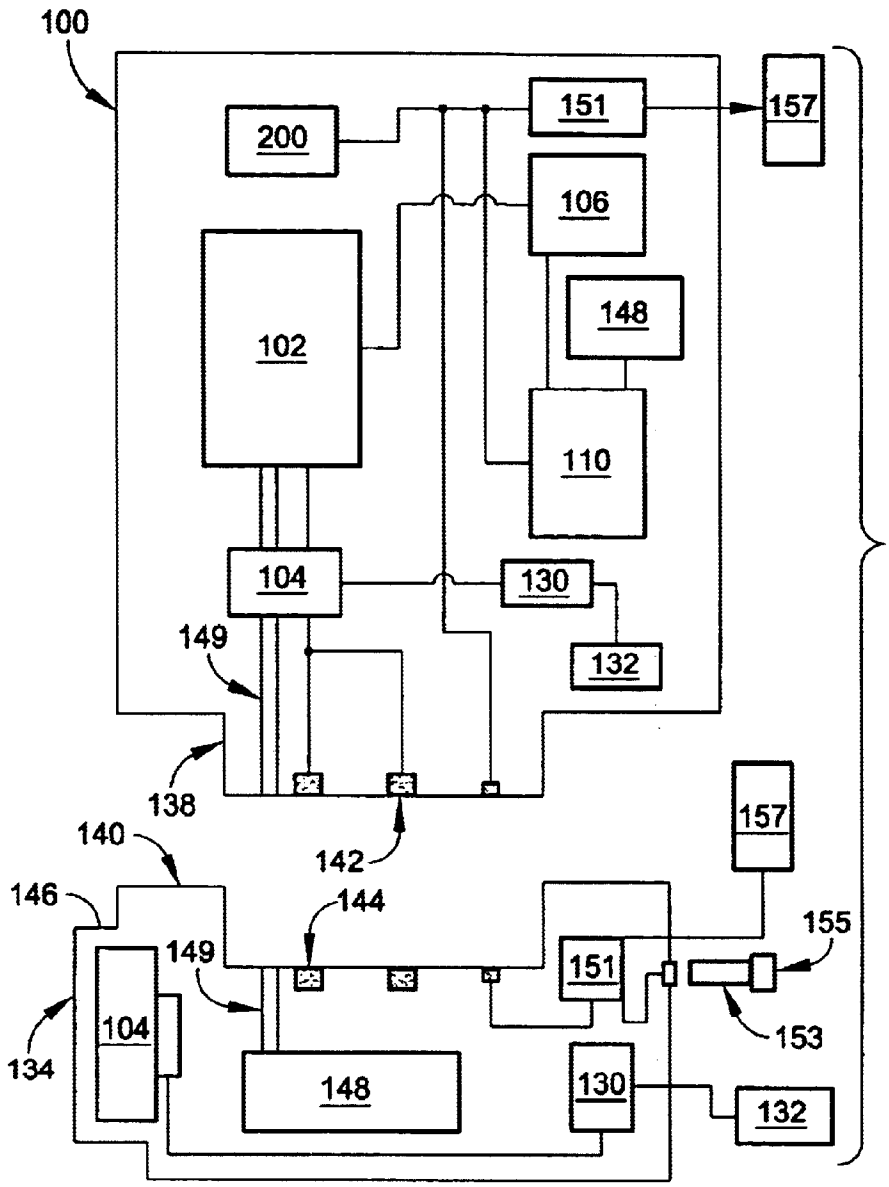
100
200
151
157
106
102
148
110
104
130
132
149
138
142
140
146
144
157
155
149
151
104
153
134
148
130
132

FIG. 12

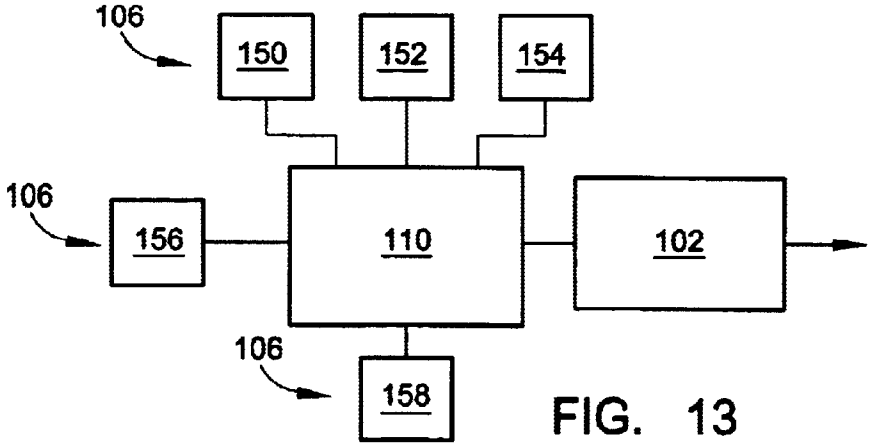
106
150
152
154
106
156
110
102
106
158

FIG. 13

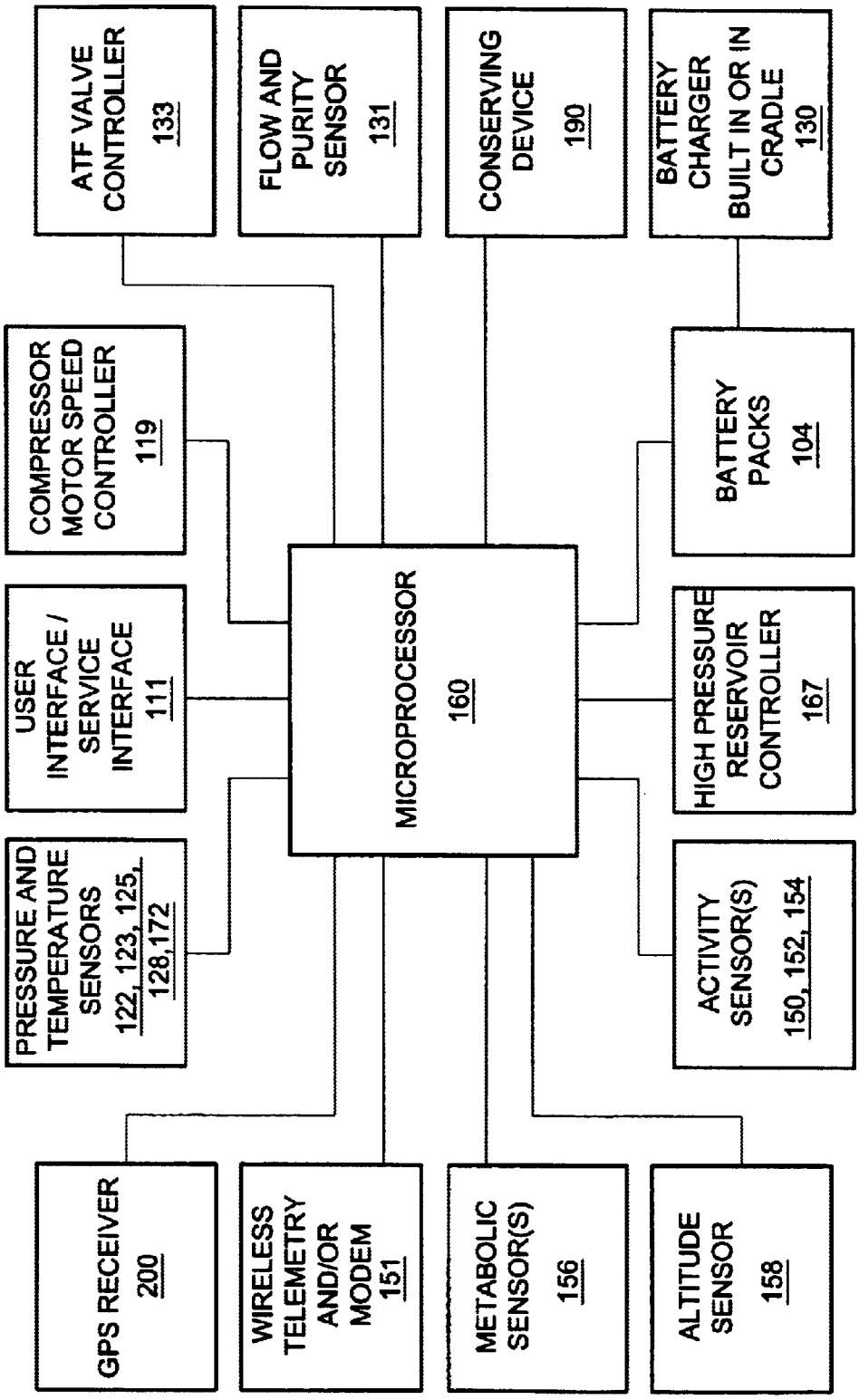
ATF VALVE CONTROLLER 133
FLOW AND PURITY SENSOR 131
CONSERVING DEVICE 190
BATTERY CHARGER BUILT IN OR IN CRADLE 130
COMPRESSOR MOTOR SPEED CONTROLLER 119
BATTERY PACKS 104
USER INTERFACE / SERVICE INTERFACE 111
MICROPROCESSOR 160
HIGH PRESSURE RESERVOIR CONTROLLER 167
PRESSURE AND TEMPERATURE SENSORS 122, 123, 125, 128,172
ACTIVITY SENSOR(S) 150, 152, 154
GPS RECEIVER 200
WIRELESS TELEMETRY AND/OR MODEM 151
METABOLIC SENSOR(S) 156
ALTITUDE SENSOR 158

FIG. 14

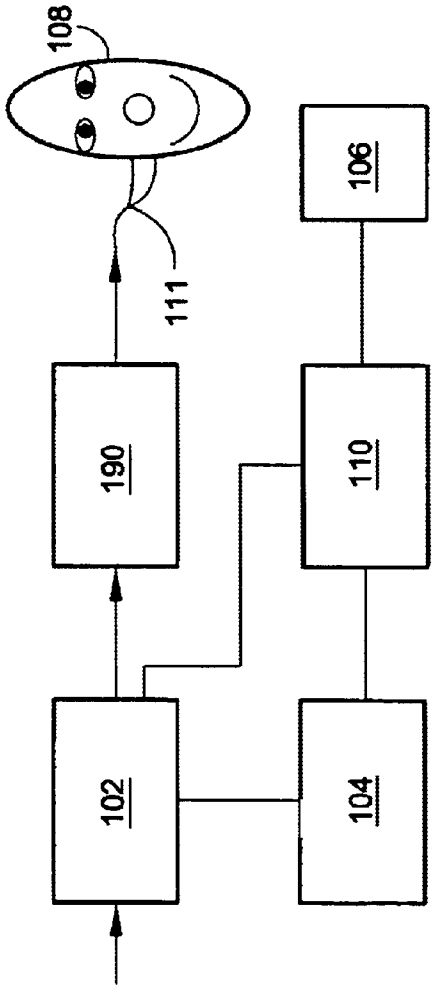
108
111
190
102
106
110
104

FIG. 15

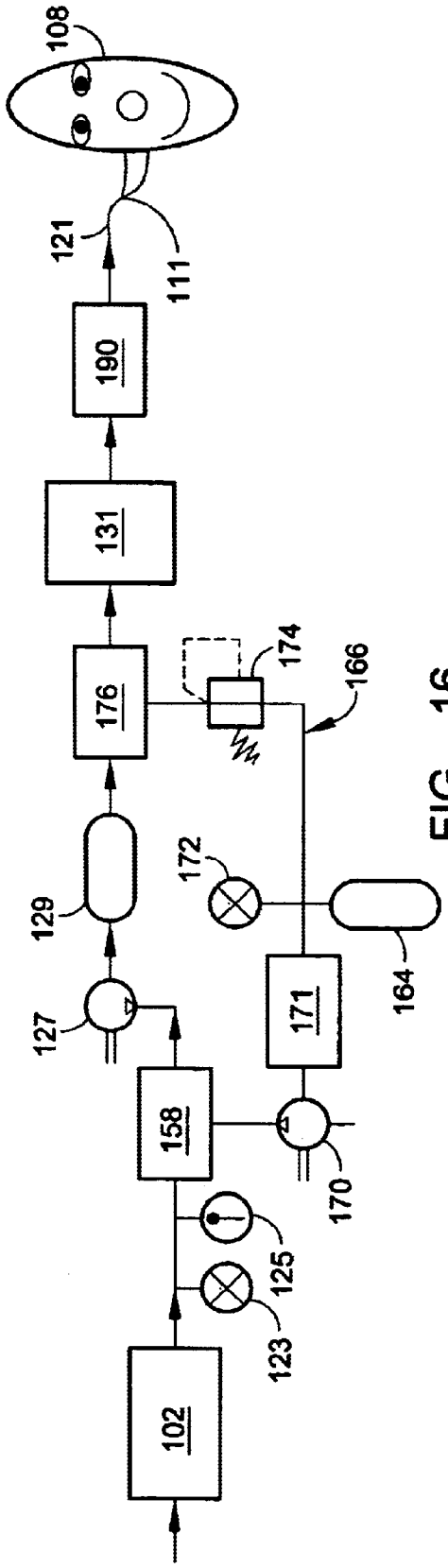
108
121
111
190
131
176
174
166
129
172
127
171
164
158
170
125
123
102

FIG. 16

PORTABLE OXYGEN CONCENTRATION SYSTEM AND METHOD OF USING THE SAME

This application is a continuation-in-part of pending prior application Aer. No. 09/632,099, filed on Aug. 3, 2000.

BACKGROUND OF THE INVENTION

The field of this invention relates, in general, to oxygen concentrators and, in particular, to portable oxygen concentration systems for ambulatory respiratory patients that allow them to lead normal and productive lives.

There is a burgeoning need for home and ambulatory oxygen. Supplemental oxygen is necessary for patients suffering from lung disorders; for example, pulmonary fibrosis, sarcoidosis, or occupational lung disease. For such patients, oxygen therapy is an increasingly beneficial, life-giving development. While not a cure for lung disease, supplemental oxygen increases blood oxygenation, which reverses hypoxemia. This therapy prevents long-term effects of oxygen deficiency on organ systems—in particular, the heart, brain and kidneys.

Oxygen treatment is also prescribed for Chronic Obstructive Pulmonary Disease (COPD), which afflicts about six-hundred million people in the U.S., and for other ailments that weaken the respiratory system, such as heart disease and AIDS. Supplemental oxygen therapy is also prescribed for asthma and emphysema.

The normal prescription for COPD patients requires supplemental oxygen flow via nasal cannula or mask twenty four hours per day. The average patient prescription is two liters per minute of high concentration oxygen to increase the oxygen level of the total air inspired by the patient from the normal 21% to about 40%. While the average oxygen flow requirement is two liters per minute, the average oxygen concentrator has a capacity of four to six liters of oxygen per minute. This extra capacity is occasionally necessary for certain patients who have developed more severe problems, are not generally able to leave the home (as ambulatory patients) and do not require a portable oxygen supply.

There are currently three modalities for supplemental medical oxygen: high pressure gas cylinders, cryogenic liquid in vacuum insulated containers or thermos bottles commonly called "dewars," and oxygen concentrators. Some patients require in-home oxygen only while others require in-home as well as ambulatory oxygen depending on their prescription. All three modalities are used for in-home use, although oxygen concentrators are preferred because they do not require dewar refilling or exchange of empty cylinders with full ones. Home oxygen concentrators, however, do have their drawbacks. They consume relatively large amounts of electricity (350–400 Watts), are relatively large (about the size of a night stand), are relatively heavy (weight about 50 lbs.), emit quite a bit of heat, and are relatively noisy.

Only small high pressure gas bottles and small liquid dewars are truly portable enough to be used for ambulatory needs (outside the home). Either modality may be used for both in-home and ambulatory use or may be combined with an oxygen concentrator which would provide in-home use.

As described below, the current oxygen-supplying methods and devices have proven cumbersome and unwieldy and there has been a long-felt need for an improved portable device for supplying oxygen to the user.

For people who need to have oxygen and operate away from an oxygen-generating or oxygen-storage source such

as a stationary oxygen system (or even a portable system which cannot be readily transported), the two most prescribed options generally available to patients are: (a) to carry with them small cylinders typically in a wheeled stroller; and (b) to carry portable containers typically on a shoulder sling. Both these gaseous oxygen and liquid oxygen options have substantial drawbacks, but from a medical view, both have the ability to increase the productive life of a patient.

The major drawback of the gaseous oxygen option is that the small cylinders of gaseous oxygen can only provide gas for a short duration. Another drawback is that a patient's high-pressure gaseous oxygen cylinders are not allowed in some locations such as airplanes because of safety considerations. A further drawback of the gaseous oxygen option is the refill requirement for oxygen once the oxygen has been depleted from the cylinder. These small gas cylinders must be picked up and refilled by the home care provider at a specialized facility. This requires regular visits to a patient's home by a provider and a substantial investment in small cylinders by the provider because so many are left at the patient's home and refilling facility. Although it is technically possible to refill these cylinders in the patient's home using a commercial oxygen concentrator that extracts oxygen from the air, this task would typically require an on-site oxygen compressor to boost the output pressure of the concentrator to a high level in order to fill the cylinders. Some disadvantages of common on-site oxygen compressors are that they are expensive, loud and emit a lot of heat. Additionally, attempting to compress the oxygen in pressurized canisters in the home is potentially dangerous, especially for untrained people.

This approach of course presents several safety concerns for in-home use. For example, in order to put enough of this gas in a portable container, it must typically be compressed to high pressure (~2000 psi) Compressing oxygen from 5 psi (the typical output of an oxygen concentrator) to 2000 psi will produce a large amount of heat. (Enough to raise the temperature 165 degrees C. per stage based on three adiabatic compression stages with intercooling.) This heat, combined with the oxygen which becomes more reactive at higher pressures, sets up a potential combustion hazard in the compressor in the patient's home. Thus, operation of a high-pressure gas system in the patient's home is dangerous and not a practical solution.

The convenience and safety issues are not the only drawbacks of this compressed oxygen approach. Another drawback is that the compressors or pressure boosters needed are costly because they require special care and materials needed for high pressure oxygen compatibility.

Turning now to the liquid oxygen storage option, its main drawback is that it requires a base reservoir—a stationary reservoir base unit within the patient's home about the size of a standard beer keg—which may be refilled about once a week from an outside source. Liquid oxygen can then be transferred from the patient's base unit to a portable dewar, which can be used by the ambulatory patient. Also, with the liquid oxygen option, there is substantial waste, as a certain amount of oxygen is lost during the transfer to the portable containers and from evaporation. It is estimated that 20% of the entire contents of the base cylinder will be lost in the course of two weeks because of losses in transfer and normal evaporation. These units will typically boil dry over a period of 30 to 60 days even if no oxygen is withdrawn.

Home refilling systems that produce liquid oxygen and have the capability of refilling portable liquid oxygen dew-

ars have been proposed. However, these devices require the user to perform the task of refilling bottles and add tens of dollars per month to the user's electric bill, which is not reimbursable.

There are other complications with these portable high-pressure cylinders and liquid dewars. Typically, supplemental oxygen is supplied to the patient by a home care provider, in exchange for which the provider receives a fixed monetary payment from insurance companies or Medicare regardless of the modality. Oxygen concentrators are preferred by the provider as the least expensive option for supplying the patient's at-home needs. For outside the home use, however, only small high-pressure gas bottles and small liquid dewars are portable enough to be used for ambulatory needs. Either one of these two modalities may be used for both in-home and ambulatory use or may be combined with an oxygen concentrator, which would provide in-home use. In either case, the home care provider must make costly weekly or biweekly trips to the patient's home to replenish the oxygen. One of the objects of this invention is to eliminate these costly milk runs."

So-called "portable" oxygen concentrators are commercially available for providing patients with gaseous oxygen by converting ambient air into concentrated gaseous oxygen. However, these devices are only "portable" in the sense that they are capable of being transported to another point of use via an automobile or an airplane. One of these devices is packaged in a suitcase and is billed as a transportable machine rather than a truly portable oxygen concentrator. The device weighs about 37 lbs. without battery and requires 135 Watts of power at a 2 LPM (liters per minute) oxygen flow rate. Operation from an automobile battery is possible when in route in a car, but operation from a separate battery is impractical. Another device is a 3 LPM concentrator mounted on its own cart. It weighs 22 lbs. without battery and also requires about 135 Watts of power. A further device weighs about 28 lbs. without battery and has a similar flow rate and power requirements to the above devices. Even without a battery, these devices are too heavy for the average ambulatory respiratory patient. With the weight of a battery, these prior art devices are not "portable" in the true sense of the word because they can not be readily transported from one point to another. Because these devices have relatively large power consumption requirements, they also require a sizable battery.

Further, in addition to the weight and power consumption problems with the above oxygen concentrators, none of these prior art concentrators are particularly quiet. They produce noise levels similar to those produced by a home concentrator. In fact, one of these devices specifie's noise production at 60 dBA (decibels), about twice the noise of a home concentrator. Consequently, none of these so-called "portable" oxygen concentrators are suitable for use in environments where low noise is especially important, e.g., restaurants, libraries, churches and theatres.

Thus, a long-felt need exists for a truly "portable" oxygen concentration system that eliminates the need for high-pressure gas cylinders and liquid dewars, the constant refilling/replacing requirements associated with high-pressure gas cylinders and liquid dewars, and the need for a separate home oxygen concentration system for ambulatory respiratory patients. A truly "portable" oxygen concentration system would be light enough so that, even with a battery, an average ambulatory respiratory patient could carry the device. Inherently the device would have to be designed to have relatively low power consumption requirements so that a light-weight battery pack or other energy source could be used. Further, the device should be small enough so that it can be conveniently carried by the user, emit a relatively low amount of noise and should only emit a small amount of heat.

SUMMARY OF INVENTION

An aspect of the present invention involves a portable oxygen concentrator system adapted to be readily transported by a user. The portable oxygen concentrator system includes a rechargeable energy source and a concentrator powered by the energy source. The concentrator converts ambient air into concentrated oxygen gas for the user and includes a plurality of adsorption beds and a rotary valve assembly. The rotary valve assembly is relatively rotatable with respect to the plurality of adsorption beds to provide valving action for selectively transferring fluids through the plurality of adsorption beds for converting ambient air into concentrated oxygen gas for the user. The ratio of adiabatic power to oxygen flow for the concentrator is in the range of 6.2 W/LPM to 23.0 W/LPM.

Another aspect of the invention involves a rotary valve assembly for a pressure swing adsorption system having a plurality of adsorption beds. The rotary valve assembly includes a valve port plate and a rotary valve shoe having respective engaged surfaces and are relatively rotatable about a common center of rotation to provide valving action for selectively transferring fluids therethrough. The valve port plate includes at least two ports interconnected with at least two adsorption beds. The rotary valve shoe includes a second valve surface opposite the engaged surface with at least one equalization passage to register with the at least two ports of the port plate to equalize pressure between the at least two adsorption beds.

Other and further objects, features, aspects, and advantages of the present inventions will become better understood with the following detailed description of the accompanying drawings.

BRIEF DESCRIPTION OF THE DRAWINGS

FIG. **1** is a block diagram of a portable oxygen concentration system constructed in accordance with an embodiment of the invention;

FIG. **2** is a block diagram of a portable oxygen concentration system constructed in accordance with another embodiment of the invention, and illustrates, in particular, an embodiment of an air separation device;

FIG. **3**A is a perspective, cut-away view of an embodiment of a concentrator that may be used with the portable oxygen concentration system.

FIG. **3**B is a perspective, exploded view of the concentrator illustrated in FIG. **3**A.

FIG. **4** is a top perspective view of an embodiment of a top manifold and multiple adsorption beds that may be used with the concentrator illustrated in FIGS. **3**A and **3**B.

FIGS. **5**A and **5**B are a bottom plan view and a top plan view respectively of an embodiment of a rotary valve shoe that may be used with the concentrator illustrated in FIGS. **3**A and **3**B.

FIG. **6**A is a top plan view of an embodiment of a valve port plate that may be used with the concentrator illustrated in FIGS. **3**A and **3**B.

FIG. **6**B is a flow chart of an exemplary process cycle for the concentraotor illustrated in FIGS. **3**A and **3**B.

FIGS. **7**A and **7**B are a top plan view and a bottom plan view respectively of an embodiment of a media retention

cap that may be used with the concentrator illustrated in FIGS. **3**A and **3**B.

FIGS. **8**A and **8**B are a top perspective, exploded view and a bottom perspective, exploded view respectively of an embodiment of a rotary valve assembly including a centering pin that may be used with the concentrator illustrated in FIGS. **3**A and **3**B.

FIGS. **9**A and **9**B are a bottom perspective, exploded view and a top perspective, exploded view respectively of an embodiment of a rotary valve assembly including a centering ring that may be used with the concentrator illustrated in FIGS. **3**A and **3**B.

FIG. **10**A is a bottom perspective view of an embodiment of a rotary valve shoe, a motor drive, and a pair of elastic chain links that may be used with the concentrator illustrated in FIGS. **3**A and **3**B.

FIGS. **10**B and **10**C are a top perspective, exploded view and a bottom perspective, exploded view respectively of the rotary valve shoe, motor drive, and pair of elastic chain links illustrated in FIG. **10**A.

FIG. **11** is a table of experimental data for a portable oxygen concentration system including the concentrator illustrated in FIGS. **3**A and **3**B.

FIG. **12** is a schematic illustration of a further embodiment of the portable oxygen concentration system and an embodiment of a cradle for use with the portable oxygen concentration system;

FIG. **13** is a block diagram of the one or more sensors that may be used with an embodiment of the portable oxygen concentration system;

FIG. **14** is a block diagram of the one or more components that may be controlled by the control unit of the portable oxygen concentration system;

FIG. **15** is a block diagram of a portable oxygen concentration system constructed in accordance with additional embodiment of the invention; and

FIG. **16** is a schematic illustration of another embodiment of a portable oxygen concentration system including a high-pressure reservoir.

DETAILED DESCRIPTION OF THE PREFERRED EMBODIMENT

I. Portable Oxygen Concentration System

With reference to FIG. **1**, a portable oxygen concentration system, indicated generally by the reference numeral **100**, constructed in accordance with an embodiment of the invention will now be described. The oxygen concentration system **100** includes an air separation device such as an oxygen gas generator **102** that separates concentrated oxygen gas from ambient air, an energy source such as rechargeable battery, battery pack, or fuel cell **104** that powers at least a portion of the oxygen gas generator **102**, one or more output sensors **106** used to sense one or more conditions of the user **108**, environment, etc. to determine the oxygen output needed by the user or required from the system **100**, and a control unit **110** linked to the output sensor **106**, the air separation device **102**, and the energy source **104** to control the operation of the air separation device **102** in response to the one or more conditions sensed by the one or more output sensors **106**.

In an alternative embodiment, the system **100** may not include the one or more output sensors **106** coupled to the control unit **110**. In this embodiment, conditions of the system **100** such as flow rate, oxygen concentration level, etc. may be constant for the system or may be manually controllable. For example, the system **100** may include a user interface **111** (FIG. **14**) that allows the user, provider, doctor, etc. to enter information, e.g., prescription oxygen level, flow rate, etc. to control the oxygen output of the system **100**.

Each element of the system **100** will now be described in more detail.

A. Air Separation Device

With reference to FIG. **2**, the air separation device is preferably an oxygen generator **102** generally including a pump such as a compressor **112** and an oxygen concentrator **114** (OC), which may be integrated.

The oxygen generator **102** may also include one or more of the elements described below and shown within the segmented boundary line in FIG. **2**. Ambient air may be drawn through an inlet muffler **116** by the compressor **112**. The compressor **112** may be driven by one or more DC motors **118** (M) that run off of DC electrical current supplied by the rechargeable battery **104** (RB). The motor **118** also preferably drives the cooling fan part of the heat exchanger **120**. A variable-speed controller (VSC) or compressor motor speed controller **119**, which is described in more detail below, may be integral with or separate from the control unit **110** (CU) and is preferably coupled to the motor **118** for conserving electricity consumption. The compressor **112** delivers the air under pressure to the concentrator **114**.

In a preferred embodiment, at a maximum speed air is delivered to the concentrator **114** at 7.3 psig nominal and may range from 5.3 to 12.1 psig. At maximum speed, the flow rate of feed is a minimum of 23.8 SLPM at inlet conditions of 14.696 psi absolute, 70 degrees F., 50% relative humidity.

A heat exchanger **120** may be located between the compressor **112** and the concentrator **114** to cool or heat the air to a desired temperature before entering the concentrator **114**, a filter (not shown) may be located between the compressor **112** and the concentrator **114** to remove any impurities from the supply air, and a pressure transducer **122** may be located between the compressor **112** and the, concentrator **114** to get a pressure reading of the air flow entering the concentrator **114**.

The concentrator **114** separates oxygen gas from air for eventual delivery to the user **108** in a well-known manner. One or more of the following components may be located in a supply line **121** between the concentrator **114** and the user **108**: a pressure sensor **123**, a temperature sensor **125**, a pump **127**, a low-pressure reservoir **129**, a supply valve **160**, a flow and purity sensor **131**, and a conservation device **190**. As used herein, supply line **121** refers to the tubing, connectors, etc. used to connect the components in the line. The pump **127** may be driven by the motor **118**. The oxygen (gas may be stored in the low-pressure reservoir **129** and delivered therefrom via the supply line **121** to the user **108**. The supply valve **160** may be used to control the delivery of oxygen gas from the low-pressure reservoir **129** to the user **108** at atmospheric pressure.

Exhaust gas may also be dispelled from the concentrator **114**. In a preferred embodiment of the invention, a vacuum generator **124** (V), which may also be driven by the motor **118** and integrated with the compressor **112**, draws exhaust gas from the concentrator **114** to improve the recovery and productivity of the concentrator **114**. The exhaust gas may exit the system **100** through an exhaust muffler **126**. A pressure transducer **128** may be located between the concentrator **114** and the vacuum generator **124** to get a pressure reading of the exhaust flow from the concentrator **114**. At maximum rated speed and a flow rate of 20.8 SLPM, the pressure at the vacuum side is preferably −5.9 psig nominal and may range from −8.8 to −4.4 psig.

1. Compressor/Variable Speed Controller

Example of compressor technologies that may be used for the compressor **112** include, but not by way of limitation, rotary vane, linear piston with wrist pin, linear piston without wrist pin, nutating disc, scroll, rolling piston, diaphragm pumps, and acoustic. Preferably the compressor **112** and vacuum generator **124** are integrated with the motor **118** and are oil-less, preventing the possibility of oil or grease from entering the air flow path.

The compressor **112** preferably includes, at a minimum, a 3:1 speed ratio, with a low speed of at least 1,000 rpm and a 15,000 hour operating life when run at full speed. Operating temperature surrounding the compressor/motor system is preferably 32 to 122 degrees F. Storage temperature is preferably −4 to 140 degree F. Relative humidity is preferably 5 to 95% RH noncondensing. Voltage for the compressor **112** is preferably 12 V DC or 24V DC and the electrical power requirements are preferably less than 100 W at full speed and rated flow/nominal pressure and less than 40 W at ⅓ speed and ⅓ flow at rated pressure. A shaft mounted fan or blower may be incorporated with the compressor **112** for compressor cooling and possible complete system cooling. Preferably, the maximum sound pressure level of the compressor **112** may be 46 dBA at a maximum rated speed and flow/pressure and 36 dBA at ⅓ rated speed. Preferably the compressor **112** weighs less than 3.5 pounds.

It is desirable for the compressor **112** to run at a variety of speeds; provide the required vacuum/pressure levels and flow rates, emit little noise and vibration, emit little heat, be small, not be heavy, and consume little power.

The variable-speed controller **119** is important for reducing the power consumption requirements of the compressor **112** on the rechargeable battery **104** or other energy source. With a variable-speed controller, the speed of the compressor **112** may be varied with the activity level of the user, metabolic condition of the user, environmental condition, or other condition indicative of the oxygen needs of the user as determined through the one or more output sensors **106**.

For example, the variable-speed controller may decrease the speed of the motor **118** when it is determined that the oxygen requirements of the user **108** are relatively low, e.g., when the user is sitting, sleeping, at lower elevations, etc., and increased when it is determined that the oxygen requirements of the user **108** are relatively high or higher, e.g., when the user stands, when the user is active, when the user is at higher elevations, etc. This helps to conserve the life of the battery **104**, reduce the weight and size of the battery **104**, and reduce the compressor wear rate, improving its reliability.

One of the inventors of the present invention was a co-inventor on a variable-speed controller in the past that regulated the compressor speed to operate the compressor only at the speed and power needed to deliver oxygen at the user's prescribed flow rate. This variable-speed controller is discussed in U.S. Pat. Nos. 5,593,478 and 5,730,778, which are hereby incorporated by reference as though set forth in full.

The variable-speed controller **119** allows the compressor **112** to operate at a low average rate, typically the average rate or speed will be between full speed and ⅙ full speed of the compressor **112**, resulting in an increase in battery life, decrease in battery size and weight, and decrease in compressor noise and emitted heat.

2. Concentrator

In a preferred embodiment, the concentrator **114** is an Advanced Technology Fractionator (ATF) that may be used for medical and industrial applications. The ATF may implement a pressure swing adsorption (PSA) process, a vacuum pressure swing adsorption (VPSA) process, a rapid PSA process, a very rapid PSA process or other process. If a PSA process is implemented, the concentrator may include a rotating valve or a non-rotating valve mechanism to control air flow through multiple sieve beds therein. Examples of ATF concentrators are shown and described in U.S. Pat. Nos. 5,268,021, 5,366,541, Re. 35,099, which are hereby incorporated by reference as though set forth in full. The sieve beds may be tapered so that they have larger diameter where gaseous flow enters the beds and a smaller diameter where gaseous flow exits the beds. Tapering the sieve beds in this manner requires less sieve material and less flow to obtain the same output.

Although an ATF concentrator **114** is used in a preferred embodiment, it will be readily apparent to those skilled in the art that other types of concentrators or air-separation devices may be used such as, but not by way of limitation, membrane separation types and electrochemical cells (hot or cold). If other types of concentrators or air-separation devices are used, it will be readily apparent to those skilled in the art that some aspects described herein may change accordingly. For example, if the air-separation device is a membrane separation type, pumps other than a compressor may be used to move air through the system.

The ATF preferably used is significantly smaller that ATFs designed in the past. The inventors of the present invention recognized that reducing the size of the ATF concentrator **114** not only made the system **100** smaller and more portable, it also improved the recovery percentage, i.e., the percentage of oxygen gas in air that is recovered or produced by the concentrator **114** and the productivity (liters per minute/lb. of sieve material) of the concentrator **114**. Reducing the size of the ATF decreases the cycle time for the device. As a result, productivity is increased.

Further, the inventors also determined that finer sieve materials increased recovery rates and productivity. The time constant to adsorb unwanted gases is smaller for finer particles because the fluid path is shorter for the gases than for larger particles. Thus, fine sieve materials having small time constants are preferred. An example of a sieve material that may be used in the ATF concentrator **114** is described in U.S. Pat. No. 5,413,625 to Chao, et al., which is incorporated by reference as though set forth in full. The sieve material may be a LithiumX Zeolite that allows for a high exchange of Lithium ions. The bead size may, for example, be 0.2–0.6 mm. In an alternative embodiment, the Zeolite may be in the form of a rigid structure such as an extruded monolith or in the form of rolled up paper. In this embodiment, the Zeolite structure would allow for rapid pressure cycling of the material without introducing significant pressure drop between the feed and product streams.

The size of the concentrator **114** may vary with the flow rate desired. For example, the concentrator **114** may come in a 1.5 Liter per minute (LPM) size, a 2 LPM size, a 2.5 LPM size, a 3 LPM size, etc.

The oxygen gas generator **102** may also include an oxygen source in addition to the concentrator **114** such as, but not by way of limitation, a high-pressure oxygen reservoir, as described in more detail below.

An ATF valve controller **133** may be integral with or separate from the control unit **110** and is coupled with valve electronics in the concentrator **114** for controlling the valve (s) of the concentrator **114**.

The concentrator may have one or more of the following energy saving modes: a sleep mode, a conserving mode, and an active mode. Selection of these modes may be done

manually by the user **108** or automatically such as through the described one or more sensors **106** and control unit **110**.

With reference to FIGS. **3**A and **3**B, an embodiment of a concentrator **114** that may be used in the oxygen generator **102** will now be described in more detail. Although the concentrator **114** will be described as separating oxygen from air, it should be noted that the concentrator **114** may be used for other applications such as, but not by way of limitation, air separations for the production of nitrogen, hydrogen purification, water removal from air, and argon concentration from air. As used herein, the term "fluids" includes both gases and liquids.

The concentrator **114** described below includes numerous improvements over previous concentrators that result in increased recovery of the desired component and increased system productivity. Improved recovery is important since it is a measure of the efficiency of the concentrator. As a concentrator's recovery increases, the amount of feed gas required to produce a given amount of product decreases. Thus, a concentrator with higher recovery may require a smaller feed compressor (e.g., for oxygen concentration from air) or may be able to more effectively utilize feed gas to recover valuable species (e.g., for hydrogen purification from a reformate stream). Improved productivity is important since an increase in productivity relates directly to the size of the concentrator. Productivity is measured in units of product flow per mass or volume of the concentrator. Thus, a concentrator with higher productivity will be smaller and weigh less than a concentrator that is less productive, resulting in a more attractive product for many applications. Therefore, concentrator improvements in recovery, productivity, or both are advantageous. The specific improvements that lead to improved recovery and productivity are detailed below.

The concentrator **114** includes five adsorption beds **300**, each containing a bed of adsorbent material which is selective for a particular molecular species of fluid or contaminant, a rotary valve assembly **310** for selectively transferring fluids through the adsorption beds **300**, an integrated tube-assembly and mainifold "manifold" **320**, a product tank cover **330**, and a valve assembly enclosure **340**.

The adsorption beds **300** are preferably straight, elongated, molded, plastic vessels surrounded by the product tank cover **330**, which is made of metal, preferably aluminum. The molded, plastic adsorption beds **300** surrounded by the metal cover **330** make for a low-cost design without the detrimental effects of water influx that occur with prior-art plastic housings or covers. Plastic adsorption beds have the inherent problem of the plastic being permeable to water. This allows water to penetrate into the adsorbent material, decreasing the performance of the adsorbent material. Surrounding the plastic adsorption beds **300** with the aluminum cover **330**, which also may serve as a product accumulation tank, maintains the low cost of the design and does not sacrifice performance.

Each adsorption bed **300** includes a product end **350** and a feed end **360**. With reference additionally to FIG. **4**, the product ends **350** of the beds **300** communicate with incoming product passages **370** of the manifold **320** through product lines **380** for communication with the rotary valve assembly **310**. The feed ends **360** of the beds **300** communicate with outgoing feed passages **390** of the manifold **320** for communication with the rotary valve assembly **310**.

The manifold **320** may also include outgoing product passages **400** that communicate the rotary valve assembly **310** with the interior of the product tank **330**, an incoming feed passage **410** that communicates the rotary valve assembly **310** with a feed pressure line **420**, and a vacuum chamber **430** that communicates the rotary valve assembly **310** with a vacuum pressure line **440**. A product delivery line **450**, which may be the same as the supply line **121** described above with respect to FIG. **2**, communicates with the interior of the product tank **330**. The vacuum pressure line **440** may communicate directly or indirectly with the vacuum generator **124** for drawing exhaust gas from the concentrator **114**.

In use, air flows from the compressor **112** to the feed pressure line **420**, through the incoming feed passage **410** of the manifold **320**. From there, air flows to the rotary valve assembly **310** where it is distributed back through outgoing feed passages **390** of the manifold **320**. From there, the feed air flows to the feed ends **360** of the adsorption beds **300**. The adsorption beds **300** include adsorbent media that is appropriate for the species that will be adsorbed. For oxygen concentration, it is desirable to have a packed particulate adsorbent material that preferentially adsorbs nitrogen relative to oxygen in the feed air so that oxygen is produced as the non-adsorbed product gas. An adsorbent such as a highly Lithium exchanged X-type Zeolite may be used. A layered adsorbent bed that contains two or more distinct adsorbent materials may also be used. As an example, for oxygen concentration, a layer of activated alumina or silica gel used for water adsorption may be placed near the feed end **360** of the adsorbent beds **300** with a lithium exchanged X-type zeolite used as the majority of the bed toward the product end **350** to adsorb nitrogen. The combination of materials, used correctly, may be more effective than a single type of adsorbent. In an alternative embodiment, the adsorbent may be a structured material and may incorporate both the water adsorbing and nitrogen adsorbing materials.

The resulting product oxygen gas flows towards the products ends **350** of the adsorption beds **300**, through the product lines **380**, through incoming product passages **370** of the manifold **320**, and to the rotary valve assembly **310**, where it is distributed back through the manifold **320** via the outgoing product passage **400** and into the product tank **330**. From the product tank **330**, oxygen gas is supplied to the user **108** through the product delivery line **450** and the supply line **121**.

With reference to FIGS. **3**B, **5**A, **5**B, **6**A, **8**A, and **8**B, an embodiment of the rotary valve assembly **310** will now be described. The rotary valve assembly **310** includes a rotary valve shoe or disk **500** and a valve port plate or disk **510**. The rotary valve shoe **500** and valve port plate **510** are both preferably circular in construction and made from a durable material such as ceramic, which can be ground to a highly polished flat finish to enable the faces of the valve shoe **500** and port plate **510** to form a fluid-tight seal when pressed together.

With reference specifically to FIG. **5**A, the rotary valve shoe **500** has a flat, bottom engagement surface **520** and a smooth cylindrical sidewall **530**. The valve shoe **500** has several symmetrical arcuate passages or channels cut into the engagement surface **520**, all of which have as their center the geometric center of the circular engagement surface **520**. The passages or channels include opposite high-pressure feed channels **540**, equalization channels **550**, opposite low-pressure exhaust passages **560**, circular low-pressure exhaust groove **570** which communicates with exhaust passages **560**, opposite product delivery channels **580**, opposite purge channels **590**, a high-presure central feed passage **600**, a first annular vent groove **610**, and a second annular vent groove **620**.

With reference additionally to FIG. **5**B, a parallel, top, second valve surface **630** of the rotary valve shoe **500** will

now be described. The purge channels **590** of the engagement surface **520** communicate with each other through vertical, cylindrical purge passages **640** and a rainbow-shaped purge groove **650** on the top surface **630**. The equalization channels **550** of the engagement surface **520** extend vertically through the valve shoe **500**. Pairs of equalization channels **550** communicate through equalization grooves **660** on the top surface **630**. The equalization grooves **660** are generally U-shaped and extend around receiving holes **670**. Equalization routing via the grooves **660** on the second valve surface **630**, in a plane out of and parallel to a plane defined by the engagement surface **520**, helps to maintain the relatively small size of the rotary valve shoe **500** while at the same time enabling more complex fluid routing through the valve shoe **500**. The equalization grooves allow the secondary valve surface to be used to equalize pressures between adsorption beds **300**.

With reference to FIGS. **3**B, **8**A, and **8**B, a first valve shoe cover **680** is disposed over the second valve surface **630** to isolate the various grooves and passages on the second valve surface **630**. Both the first valve shoe cover **680** and the second valve shoe cover **690** include aligned central holes **691**, **692**, respectively, for communicating the central feed passage **600** with a high-pressure feed fluid chamber formed around the periphery of a cylindrical base **693** of the second valve shoe cover **690**. The first valve shoe cover **680** also includes a plurality of holes **694** near its periphery for the purpose of maintaining a balance of pressure during operation on either side of the first valve shoe cover **680** between the cylindrical base **693** and the second valve surface **630**. Routing the high-pressure feed fluid into the high-pressure feed fluid chamber on the top or backside of the valve shoe **500** causes pressure balancing on the valve shoe **500** that counteracts the pressure force urging the valve shoe **500** away from the port plate **510**. A spring or other type of passive sealing mechanism (not shown) may be used to hold the rotary valve shoe **500** against the port plate **510** when the concentrator **114** is not operating.

With reference to FIG. **5**A, to additionally counteract the pressure force that works to unseat the rotary valve shoe **500** from the port plate **510**, the exhaust goove **570** is sized such that, when the concentrator **114** is operated at nominal feed and purge (vacuum) pressures, the sealing force due to the vacuum in the exhaust groove **570** subtantially balances this unseating pressure force. This enables the use of relatively small passive sealing mechanisms, reducing the torque and power required to turn the rotary valve shoe **500** and also reduces the weight and size of the concentrator **114**.

With reference to FIG. **6**A, the valve port plate **510** will now be described in greater detail. The valve port plate **510** has a flat engagement surface **700** that engages the flat engagement surfce **520** of the rotary valve shoe **500** and a smooth cylindrical sidewall **710**. With reference additionally to FIG. **3**B, an underside of the valve port plate **510** is disposed on a manifold gasket **720**. The valve port plate **510** includes multiple sets of generally symmetric concentrically disposed ports or openings aligned with openings in the manifold gasket **720** to communicate the ports in the plate **510** with the passages in the manifold **320**. The ports extend vertically through the valve port plate **510** in a direction generally perpendicular to the engagement surface **700**. In an alternative embodiment, the ports extend vertically through the valve port plate **510** in an angular direction toward the engagement surface **700**. Preferably, all of the ports of each concentric set have the same configuration. Each concentric set of ports will now be described in turn.

A first set of eight circular vacuum ports **730** concentrically disposed at a first radius from the geometric center of the valve port plate **510** communicate with the vacuum chamber **430** of the manifold **320** and the exhaust gas grooves **570** of the valve shoe **500**. In the prefered embodiment, eight ports are used as they allow sufficient gas flow through the valve without significant pressure drop. In an alternative embodiment, a number of ports different from eight could be used.

A second set of five round outgoing feed ports **740** concentrically disposed at a second radius from the geometric center of the valve port plate **510** communicate with outgoing feed passages **390** of the manifold **320**, the feed channels **540** of the valve shoe **500**, and the vacuum ports **730** via the exhaust passages **560** of the valve shoe **500**.

A third set of five generally elliptical incoming product ports **750** concentrically disposed at a third radius from the geometric center of the valve port plate **510** communicate with the incoming product passages **370** of the manifold **320**, the equalization channels **550** of the valve shoe **500**, the purge channels **590** of the valve shoe **500**, and the product delivery channels **580**.

A fourth set of five circular outgoing product ports **760** concentrically disposed at a fourth radius from the geometric center of the valve port plate **510** communicate with the outgoing product passages **400** of the manifold **320** and the incoming product ports **750** via the product delivery channels **580**.

A fifth set of three circular port plate alignment holes **731** concentrically disposed at a fifth radius from the geometric center of the valve port plate **510** align with alignment pins **321** (FIGS. **3**B, **4**) on the manifold **320**. The alignment holes **731** ensure the port plate **510** will sit in proper alignment with the manifold **320**. In an alternative embodiment, two or more alignment holes located at one or more radiuses from the geometric center of the valve port plate **510** may be aligned with an equal number of alignment pins located at set positions on the manifold **320**.

A round central incoming feed port **770** disposed at the geometric center of the valve port plate **510** and the center of rotation of the valve assembly **310** communicates with the incoming feed passage **410** of the manifold **320** and the central feed pasage **600** of the rotary valve shoe **500**.

In the rotary valve assembly **310** described above, a maximum of 1 PSI pressure drop occurs through any port of the valve asembly **310** when the system is producing 3 LPM of oxygen product. At lesser flows, the pressure drop is negligible.

With reference additionally to FIG. **6**B, a single pressure swing adsorption cycle of the concentrator **114** will now be described. During use, the rotary valve shoe **500** rotates with respect to the valve port plate **510** so that the cycle described below is sequentially and continuously established for each adsorption bed **300**. The speed of rotation of the rotary valve shoe **500** with respect to the valve port plate **510** may be varied alone, or in combination with a variable-speed compressor, in order to provide the optimal cycle timing and supply of ambient air for a given production of product. To help the reader gain a better understanding of the invention, the following is a description of what occurs in a single adsorption bed **300** and the rotary valve assembly **310** during a single cycle. It should be noted, with each revolution of the rotary valve shoe **500**, the adsorption beds **300** undergo two complete cycles. For each cycle, the steps include: 1) pre-pressurization **774**, 2) adsorption **776**, 3) first equalization down **778**, 4) second equalization down **780**, 5) co-current blowdown **782**, 6) low-pressure venting **784**, 7) counter-current purge and low-pressure venting **786**, 8) first equalization up **788**, and 9) second equalization up **790**.

Each of these steps will be described in turn below for an adsorption bed **300**.

In the pre-pressurization step **774**, air flows from the compressor **112** to the feed pressure line **420**, through the incoming feed passage **410** of the manifold **320**. From there, air flows through the central incoming feed port **770** of the port plate **510**, through the central feed passage **600** and out the feed channels **540** of the valve shoe **500**, through the outgoing feed ports **740**, and through outgoing feed passages **390** of the manifold **320**. From there, the feed air flows to the feed ends **360** of the adsorption beds **300**. With reference to FIG. **5**A, because the feed channel **540** is advanced with respect to the product delivery channel **580** (i.e., initially the feed channel **540** is in communication with outgoing feed port **740** and the product delivery channel **580** is blocked, not in communication with the incoming product port **750**), the feed end **360** of the adsorption bed **300** is pressurized with feed gas, i.e., pressurized, prior to the commencement of product delivery. In alternative embodiments, the product end **350** may be pre-pressurized with product gas, or the product end **350** may be pre-pressurized with product gas and the feed end **360** may be pre-pressurized with feed gas.

In the adsorption step **776**, because the product delivery channel **580** is in communication with the incoming product port **750**, adsorption of Nitrogen occurs in the bed **300** and the resulting product oxygen gas flows towards the product ends **350** of the adsorption beds **300**, through the product lines **380**, and through incoming product passages **370** of the manifold **320**. From there, oxygen gas flows through the incoming product port, into and out of the product delivery channel **580**, through outgoing product port **760**, through the outgoing product passage **400**, and into the product tank **330**. From the product tank **330**, oxygen gas is supplied to the user **108** through the product delivery line **450** and the supply line **121**.

In the first equalization-down step **778**, the product end **350** of the bed **300**, which is at a high pressure, is equalized with the product end of another bed, which is at a low pressure, to bring the product end **350** of the bed **300** to a lower, intermediate pressure. The product ends **350** communicate through the product lines **380**, the incoming product passages **370**, the incoming product ports **750**, the equalization channels **550**, and the equalization groove **660**. As indicated above, equalization routing via the grooves **660** on the second valve surface **630**, in a plane out of and parallel to a plane defined by the engagement surface **520**, helps to maintain the relatively small size of the rotary valve shoe **500**, in order to keep the torque required to turn the valve shoe **500** as low as possible, while at the same time enabling more complex fluid routing through the valve shoe **500**. In this step **778** and the equalization steps **780**, **788**, **790** to be discussed below, the adsorption beds **300** may be equalized at either the feed end **360**, the product end **350**, or a combination of the feed end **360** and the product end **350**.

In the second equalization-down step **780**, the product end **350** of the bed **300**, which is at an intermediate pressure, is equalized with the product end of another bed, which is at a lower pressure, to bring the product end **350** of the bed **300** further down to an even lower pressure than in step **778**. Similiar to the first equalization-down step **778**, the product ends **350** communicate through the product lines **380**, the incoming product passages **370**, the incoming product ports **750**, the equalization channels **550**, and the equalization groove **660**.

In the co-current blowdown ("CCB") step **782**, oxygen enriched gas produced from the product end **350** of the adsorption bed **300** is used to purge a second adsorption bed **300**. Gas flows from the product side of the adsorption bed **300**, through product line **380**, incoming product passage **370**, and incoming product port **750**. The gas further flows through purge channel **590**, purge passage **640**, through the purge groove **650**, out the purge passage **640** on the opposite side of the valve shoe **500**, through the purge channel **590**, through the incoming product port **750**, through the incoming product pasasge **370**, through the product line **380**, and into the product end **350** of adsorption bed **300** to serve as a purge stream. In an alternative embodiment, in this step **782** and the following step **784**, co-current blowdown may be replaced with counter-current blowdown.

In the low-pressure venting ("LPV") step **784**, the adsorption bed **300** is vented to low pressure through the feed end **360** of the adsorption bed **300**. The vacuum in the exhaust groove **570** of the rotary valve shoe **500** communicates with the exhaust passage **560** and the feed end **360** of the adsorption bed **300** (via the outgoing feed port **740** and outgoing feed passage **390**) to draw the regeneration exhaust gas out of the adsorption bed **300**. The low pressure venting step **784** occurs without introduction of oxygen enriched gas because the exhaust passage **560** is in communication with the outgoing feed port **740** and the purge channel **590** is not in communication with the incoming product port **750**.

In the counter-current purge and low-pressure venting ("LPV") step **786**, oxygen enriched gas is introduced into the product end **350** of the adsorption bed **300** in the manner described above in step **782** concurrently with the feed end **360** of the adsorption bed **300** being vented to low pressure as was described in the above step **784**. Counter-current purge is introduced into the product end **350** of the adsorbent bed **300** through fluid communication with the product end **350** of a second adsorption bed **300**. Oxygen enriched gas flows from the product end **350** of the second adsorption bed **300** through the product line **380**, incoming product passage **370**, incoming product port **750**, through purge channel **590**, purge passage **640**, through the purge groove **650**, out the purge passage **640** on the opposite side of the valve shoe **500**, through the purge channel **590**, through the incoming product port **750**, through the incoming product passage **370**, through the product line **380**, and into the product end **350** of adsorption bed **300**. Because the exhaust passage **560** is also in communication with the outgoing feed port **740** during this step **786**, oxygen enriched gas flows from the product end **350** to the feed end **360**, regenerating the adsorption bed **300**. The vacuum in the exhaust groove **570** of the rotary valve shoe **500** communicates with the exhaust passage **560** and the feed end **360** of the adsorption bed **300** (via the outgoing feed port **740** and outgoing feed passage **390**) to draw the regeneration exhaust gas out of the adsorption bed **300**. From the exhaust passage **560**, the exhaust gas flows through the vacuum ports **730**, into the vacuum chamber **430**, and out the vacuum presure line **440**. In an alternative embodiment, the vacuum may be replaced with a low-pressure vent that is near atmospheric pressure or another pressure that is low relative to the feed pressure. In another embodiment, product gas from the product tank **330** is used to purge the product end **350** of the adsorbent bed **300**.

In the first equalization-up step **788**, the product end **350** of the bed **300**, which is at a very low pressure, is equalized with the product end of another bed, which is at a high pressure, to bring the adsorption bed **300** to a higher, intermediate pressure. The product ends **350** communicate through the product lines **380**, the incoming product passages **370**, the incoming product ports **750**, the equalization channels **550**, and the equalization groove **660**.

In the second equalization-up step **790**, the product end **350** of the bed **300**, which is at an intermediate pressure, is equalized with the product end of another bed, which is at a higher pressure, to bring the product end **350** of the bed **300** further up to an even higher pressure than in step **788**. Similiar to the first equalization-down step **778**, the product ends **350** communicate through the product lines **380**, the incoming product passages **370**, the incoming product ports **750**, the equalization channels **550**, and the equalization groove **660**.

It should be noted, in a preferred embodiment, the combined duration of feed steps **774**, **776** may be substantially the same as the combined duration of purge steps **782**, **784**, **786**, which may be substantially three times the duration of each equalization step **778**, **780**, **788**, **790**. In an alternative embodiment, the relative duration of the feed steps **774**, **776**, the purge steps **782**, **784**, **786**, and the each equalization step **778**, **780**, **788**, **790** may vary.

After the second equalization-up step **790**, a new cycle begins in the adsorption bed **300** starting with the pre-pressurization step **774**.

The five-bed concentrator **114** and cycle described above has a number of advantages over other-numbered concentrators and cycles used in the past, some of which are described below. The multiple equalization steps **788**, **790** at the product ends **350** and the pre-pressurization step **774** contribute to the pre-pressurization of the adsorption beds **300** prior to product delivery. As a result, the beds **300** reach their ultimate pressure (substantially equal to the feed pressure) quickly and thereby allow for maximum utilization of the adsorbent media. Additionally, pre-pressurizing the adsorbent beds **300** allows product to be delivered at substantially the same pressure as the feed, thereby retaining the energy of compression in the stream, which makes the product stream more valuable for use in downstream processes. In an alternative embodiment, pre-pressurizing the beds **300** with product before exposing the feed end **360** of the bed **300** to the feed stream eliminates any pressure drop experienced due to the fluid interaction or fluid communication between two or more adsorbent beds **300** on the feed end **360**. Additionally, compared to systems with greater numbers of beds, the use of a 5-bed system, reduces the duration and number of beds that are in fluid communication with the feed chanels **540** at the same time, thereby reducing the propensity for fluid flow between adsorption beds. Since fluid flow between adsorption beds is associated with a reversal of the flow direction in the higher pressure bed (resulting in decreased performance), reduction in this effect is advantageous.

A further advantage of a 5-bed system over many systems is that it includes a small number of adsorption beds **300**, allowing the concentrator to be relative small, compact, and light-weight, while delivering sufficient flow and purity and maintaining high oxygen recovery. Other PSA systems, typically those with a small number of adsorption beds, result in deadheading the compressor (resulting in high power use) during a portion of the cycle. Deadheading the compressor eliminates detrimental flow between the feed side **360** of the two or more adsorption beds **300** (as discussed above) but increases system power. The 5-bed system eliminates compressor deadheading and minimizes performance-limiting feed side **360** flow between adsorbent beds **300**.

Use of the multiple pressure equalization steps **778**, **780**, **788**, **790** reduces the amount of energy of compression required to operate the concentrator **114**. Equalizing the beds **300** conserves high-pressure gas by moving it to another bed **300** rather than venting it to the atmosphere or to a vacuum pump. Because there is a cost associated with pressurizing a gas, conserving the gas provides a savings and improves recovery. Also, because a bed **300** may contain gas enriched with product, usually at the product end **350** of the bed **300**, allowing this gas to move into another bed **300**, rather than venting it, conserves product and improves recovery. The number of equalizations are preferably between one and four. It should be noted, each equalization represents two equalization steps, an equalization-down step and an equalization-up step. Thus, two equalizations means two down equalizations and two up equalizations, or four total equalizations. The same is true for other-number equalizations. In a preferred embodiment, one to four equalizations (two to eight equalization steps) are used in each cycle. In a more preferred embodiment, one to three equalizations (two to six equalization steps) are used in each cycle. In a most preferred embodiment, two equalizations (four equalization steps) are used in each cycle.

In alternative embodiments, the concentrator **114** may have other numbers of adsorption beds **300** based on the concentration of the feed stream, the specific gases to be separated, the pressure swing adsorption cycle, and the operating conditions. For example, but not by way of limitation, there also are advantages to four-bed concentrators and six-bed concentrators. When operating a cycle similar to that described above with a four-bed concentrator, the problem of fluid communication between the feed chanels **540** and more than one adsorption bed (at one instant) is completely eliminated. When the feed-end fluid communication is eliminated, the feed steps **774**, **776** occur in a more desirable fashion resulting in improved recovery of the desired product. The advantages of a six-bed system, compared to a five-bed system, are realized when the pressure-swing cycle described above is modified so that there are three equalization up stages and three equalization down stages instead of two equalization up stages and two equalization down stages. A third equalization is advantageous when the feed gas is available at high pressure. The third equalization conserves compressor energy because it allows the equalized beds to obtain substantially 75% of the feed pressure compared to substantially 67% of the feed pressure when two equalization stages are used. In any PSA cycle, whenever an equalization up occurs, there is a corresponding equalization down. The requirement of matching equalization stages inparts some restrictions on the relative timing of the cycle steps. If, for example, the duration of the feed step is substantially the same as the duration of each equalization step, then a six-bed cycle would provide the required matching of equalization stages.

A number of additional inventive aspects related to the concentrator **114** that increase recovery of a desired component and system productivity will now be described. With reference to FIGS. **3A**, **3B**, **7A**, and **7B**, an embodiment of a media retention cap **800** that reduces dead volume in the adsorption beds **300** will now be described. Each media retention cap **800** is located at the product end **350** of the adsorption bed **300** and supports the adsorbent material above the media retention cap **800**. A spring **810** located within and below the media retention cap **800** urges the media retention cap **800** upwards to hold the packed bed of adsorbent material firmly in place. The media retention cap **800** has a cylindrical base **820** with first and second annular flanges **830**, **840**. The second annular flange **840** terminates at its top in a circular rim **850**. A top surface **860** of the media retention cap **800** includes a plurality of ribs **870** radiating in a generally sunburst pattern from a central port **880**. Adja-

cent the central port **880**, gaps **890** create diffusion zones for purge fluid coming out of the central port **880**. The gaps **890** and the radiating ribs **870** cause the purge fluid to be distributed outward from the central port **880**, causing a more uniform, improved regeneration of the adsorbent material during a purging step. The radiating ribs **870** also help to channel product gas towards the central port **880** during a product delivery step. In an alternative embodiment, the media retention cap **800** may have a generally non-cylindrical surface to retain media in a generally non-cylindrical adsorbtion bed **300**. In a further alternative embodiment, the central port **880** may be located away from the geometric center of the either cylindrical or non-cylindrical media retention cap **800**.

With reference to FIG. **7**B, on the underside of the media retention cap **800**, the cydrical base **820** forms an interior chamber in which the spring **810** is disposed. A central port nipple **900** extends from a bottom surface **910** of the media retention cap **800**. An end of the product line **380** connects to the central port nipple **900** for communicating the product end **350** of the adsorption bed **300** with the incoming product passage **370** of the manifold **320**.

In the past, media retention caps may be held in place with a spring that fits inside and above the cap so that the spring is in the fluid flow path between the bottom of the adsorbent material and any exit port, at the product end **350** of the bed **300**. The volume in which the spring is housed represents dead volume in the system. As used herein, "dead volume" is system volume that is compressed and purged, but does not contain adsorbent media. The process of filling this volume with compressed feed and then venting that volume represents wasted feed. The improved media retention cap **800** does not add dead volume to the system because the spring **810** is housed outside of the fluid flow path. Elimination of any extra volume within the system results directly in more effective utilization of the feed, and, thus, higher recovery of the desired product.

With reference to FIGS. **8**A and **8**B, an embodiment of a centering mechanism for maintaining the rotary valve shoe **500** laterally fixed and centered with respect to the valve port plate **510** will now be described. The centering mechanism may include a centering pin **920** having a hollow cylindrical shape and made of a rigid material. When the engagement surface **520** of the rotary valve shoe **500** is engaged with the engagement surface **700** of the valve port plate **510**, the centering pin **920** is partially disposed in the central feed pasage **600** of the rotary valve shoe **500** and the central incoming feed port **770** of the valve port plate **510**. In use, the rotary valve shoe **500** rotates around the centering pin **920** and the hollow interior of the centering pin **920** allows high-pressure feed fluid to flow therethrough. The pin **920** maintains the rotating valve shoe in a fixed position relative to the valve port plate **510**. In the past, the rotary valve shoe was roughly centered with respect to the valve port plate by the motor that drives the rotary valve shoe. If the rotary valve shoe **500** and the valve port plate **510** are off center with respect to each other, the concentrator **114** will not cycle as intended, inhibiting the productivity, recovery, and efficiency of the concentrator. The precision offered by the centering pin **920** is important when the valve assembly **310** is controlling complex cycles or maintaining very small pressure drops.

With reference to FIGS. **9**A and **9**B, a rotary valve assembly constructed in accordance with another embodiment of the invention includes an alternative centering mechanism to maintain the rotating valve shoe **500** in a fixed position relative to the valve port plate **510**. A circular centering ring **930** fits snugly over the smooth cylindrical sidewall **530** of the rotary valve shoe **500** and the smooth cylindrical sidewall **710** of the stationary valve port plate **510**. The circular ring **930** centers the rotary valve shoe **500** relative to the valve port plate **510** by holding the rotary shoe **500** in a fixed position relative to the port plate **510** while at the same time allowing the rotary valve shoe **500** to rotate.

With reference to FIGS. **10**A–**10**C, an embodiment of an elastic link for coupling the motor **118** to the valve shoe **500** will now be described. A drive mechanism **940** includes a drive shaft **950**, a drive wheel **960**, and three (two shown) elastic chain links **970**. The drive shaft **950** may be connected to the motor **118** for rotating the drive wheel **960**. With reference to FIG. **10**C, a lower side **980** of the drive wheel **960** may include downwardly protruding cylindrical support posts **990**. Similarly, with reference to FIG. **10**B, an upper side **1000** of the second valve shoe cover **690** may include upwardly protruding cylindrical support posts **1010**. The elastic chain links **970** are preferably made of semi-rigid, elastic material (such as silicon rubber) and have a generally wrench-shaped configuration. Each elastic chain link **970** includes cylindrical receiving members **1020** with central cylindrical bores **1030**. The cylindrical receiving members **1020** are joined by a narrow connecting member **1040**. The drive wheel **960** is coupled to the second valve shoe cover **690** through the elastic chain links **970**. One receiving member **1020** of each elastic chain link receives the support post **990** of the drive wheel **960** and the other receiving member **1020** receives the support post **1010** of the second valve shoe cover **690**. In the past, rigid connections were made between the motor and the rotating valve shoe. These rigid connections caused the rotating valve shoe to be affected by vibration or other non-rotational movement of the motor. The elastic chain links **970** absorb the vibration and non-rotational movement of the motor, preventing this detrimental energy from being imparted to the rotating valve shoe **500**.

FIG. **11** is a table of experimental data from a concentrator similar to the concentrator **114** shown and described above with respect to FIGS. **3**–**10**. As shown by this table, the recovery of oxygen from air with the concentrator **114** is 45–71% at about 90% purity. The ratio of adiabatic power (Watts) to oxygen flow (Liters Per Minute) is in the range of 6.2 W/LPM to 23.0 W/LPM. As defined in Marks' Standard Handbook for Mechanical Engineers, Ninth Edition, by Eugene A. Avallone and Theodore Baumeister, the equation for adiabatic power, tanken from the equation from adiabatic work, is as follows:

$$\text{Power} = \frac{W}{t} = P_1 V_1 \left(\frac{k}{1-k}\right)\left[\left(\frac{P_2}{P_1}\right)^{\frac{k-1}{k}} - 1\right] C$$

Power = Adiabatic Power (Watts)

W = Adiabatic Work (Joule)

t = time (Second)

P_1 = Atomspheric Pressure (psia)

P_2 = Compressor/Vacuum pressure (psia)

k = Ratio of Specific Heats = constant = 1.4 (for air)

V_1 = Volumetric flow rate at atmospheric pressure (SLPM)

C = Conversion Factor, added by authors for clarity = 0.114871 Watts/psi/LPM

B. Energy Source

With reference additionally to FIG. **12**, in order to properly function as a lightweight, portable system **100**, the

system **100** must be energized by a suitable rechargeable energy source. The energy source preferably includes a rechargeable battery **104** of the lithium-ion type. It will be readily apparent to those skilled in the art that'. the system **100** may be powered by a portable energy source other than a lithium-ion battery. For example, a rechargeable or renewable fuel cell may be used. Although the system is generally described as being powered by a rechargeable battery **104**, the system **100** may be powered by multiple batteries. Thus, as used herein, the word "battery" includes one or more batteries. Further, the rechargeable battery **104** may be comprised of one or more internal and/or external batteries. The battery **104** or a battery module including the battery **104** is preferably removable from the system **100**. The system **100** may use a standard internal battery, a low-cost battery, an extended-operation internal battery, and an external secondary battery in a clip-on module.

The system **100** may have a built-in adapter including battery charging circuitry **130** and one or more plugs **132** configured to allow the system **100** to be powered from a DC power source (e.g., car cigarette lighter adapter) and/or an AC power source (e.g., home or office **110** VAC wall socket) while the battery **104** is simultaneously being charged from the DC or AC power source. The adapter or charger could also be separate accessories. For example, the adapter may be a separate cigarette lighter adapter used to power the system **100** and/or charge the battery **104** in an automobile. A separate AC adapter may be used to convert the AC from an outlet to DC for use by the system **100** and/or charging the battery **104**. Another example of an adapter may be an adapter used with wheel chair batteries or other carts.

Alternatively, or in addition, a battery-charging cradle **134** adapted to receive and support the system **100** may have an adapter including battery charging circuitry **130** and a plug **132** that also allow the system **100** to be powered while the battery **104** is simultaneously being charged from a DC and/or AC power source.

The system **100** and cradle **134** preferably include corresponding mating sections **138, 140** that allow the system **100** to be easily dropped into and onto the cradle **134** for docking the system **100** with the cradle **134**. The mating sections **138,140** may include corresponding electrical contacts **142, 144** for electrically connecting the system **100** to the cradle **134**.

The cradle **134** may be used to recharge and/or power the system **100** in the home, office, automobile, etc. The cradle **134** may be considered part of the system **100** or as a separate accessory for the system **100**. The cradle **134** may include one or more additional charging receptacles **146** coupled to the charging circuitry **130** for charging spare battery packs **104**. With a charging receptacle **146** and one or more additional battery packs **104**, the user can always have a supply of additional fresh, charged batteries **104**.

In alternative embodiments, the cradle **134** may come in one or more different sizes to accommodate one or more different types of systems **100**.

The cradle **134** and/or system **100** may also include a humidifying mechanism **148** for adding moisture to the air flow in the system **100** through appropriate connections **149**. In an alternative embodiment of the invention, the humidifying mechanism **148** may be separate from the system **100** and the cradle **134**. If separate from the system **100** and cradle **134**, the cradle **134** and/or system **100** may include appropriate communication ports for communicating with the separate humidifying mechanism **148**. The cradle **134** may also include a receptacle adapted to receive a separate humidifying mechanism **148** for use with the system **100** when the system **100** is docked at the cradle **134**.

The cradle **134** and/or system **100** may also include a telemetry mechanism or modem **151** such as a telephone modem, high-speed cable modem, RF wireless modem or the like for communicating the control unit **110** of the system **100** with one or more remote computers. To this end, the cradle **135** may include a line **153** with a cable adapter or telephone jack plug **155**, or a RF antenna **157**. In an alternative embodiment of the invention, the telemetry mechanism or modem **151** may be separate from the cradle **134** and to this end, the cradle **134** or system **100** may include one or more appropriate communication ports, e.g., a PC port, for directly communicating the telemetry mechanism or modem **151** with the cradle **134** or system **100**. For example, the cradle **134** may be adapted to communicate with a computer (at the location of the cradle) that includes the telemetry mechanism or modem **151**. The computer may include appropriate software for communicating information described below using the telemetry mechanism or modem **151** with the one or more remote computers.

The telemetry mechanism or modem **151** may be used to communicate physiological information of the user such as, but not by way of limitation, heart rate, oxygen saturation, respiratory rate, blood pressure, EKG, body temperature, inspiratory/expiratory time ratio (I to E ratio) with one or more remote computers. The telemetry mechanism or modem **151** may be used to communicate other types of information such as, but not by way of limitation, oxygen usage, maintenance schedules on the system **100**, and battery usage with one or more remote computers.

A user ideally uses the system **100** in its cradle **134** at home, at the office, in the automobile, etc. A user may decide to have more than one cradle, e.g., one at home, one at the office, one in the automobile, or multiple cradles at home, one in each room of choice. For example, if the user has multiple cradles **134** at home, when the user goes from room to room, e.g., from the family room to the bedroom, the user simply lifts the system **100** out of its cradle **134** in one room, and walks to the other room under battery operation. Dropping the system **100** in a different cradle **134** in th destination room restores the electrical connection between the system **100** and the AC power source. Since the system's batteries **104** are constantly charging or charged when located in the cradle **134**, excursions outside the home, office, etc. are as simple as going from room to room in the user's home.

Because the system **100** is small and light (2–15 pounds), the system **100** may simply be lifted from the cradle **134** and readily carried, e.g., with a shoulder strap, by an average user to the destination. If the user is unable to carry the system **100**, the system **100** may be readily transported to the destination using a cart or other transporting apparatus. For an extended time away from home, office, etc., the user may bring one or more cradles **134** for use at the destination. Alternatively, in the embodiment of the system **100** including the built-in adapter, power may be drawn from power sources such as a car cigarette lighter adapter and/or an AC power outlet available at the destination. Further, spare battery Packs **104** may be used for extended periods away from standard power sources.

If the battery pack **104** includes multiple batteries, the system **100** may include a battery sequencing mechanism to conserve battery life as is well known in the cellphone and laptop computer arts.

C. Output Sensor

With reference to FIGS. **1**, **2** and **13**, one or more output sensors **106** are used to sense one or more conditions of the user **108**, environment, etc. to determine the oxygen flow rate needs of the user and, hence, the oxygen flow rate output

requirements for the system **100**. A control unit **110** is linked to the one or more output sensors **106** and the oxygen gas generator **102** to control the oxygen generator **102** in response to the condition(s) sensed by the one or more output sensors **106**. For example, but not by way of limitation, the output sensor(s) **106** may include any or all of the activity sensors shown and described in U.S. Pat. No. 5,928,189, which is incorporated by reference as though set forth in full. These output sensors include a pressure sensor **150**, a position sensor **152**, an acceleration sensor **154**, as well as a physiological condition or metabolic sensor **156** and an altitude sensor **158**.

The first three sensors **150**, **152**, **154** (and, in certain circumstances, the physiological condition sensor **156**) are activity sensors because these sensors provide a signal representing activity of the user **108**. In the delivery of oxygen with a portable oxygen concentration system, it is important to deliver an amount of oxygen gas proportional to the activity level of the user **108** without delivering too much oxygen. Too much oxygen may be harmful for the user **108** and reduces the life of the battery **104**. The control unit **110** regulates the oxygen gas generator **102** to control the flow rate of oxygen gas to the user **108** based on the oneor more signals representative of the activity level of the user produced by the one or more sensors **106**. For example, if the output sensor(s) **106** indicates that the user **108** has gone from an inactive state to an active state, the control unit **110** may cause the oxygen gas generator **102** to increase the flow rate of oxygen gas to the user **108** and/or may provide a burst of oxygen gas to the user **108** from a high-pressure oxygen reservoir to be described. If the output sensor(s) **106** indicates that the user **108** has gone from an active state to an inactive state, the control unit **110** may cause the oxygen gas generator **102** to reduce the flow rate of oxygen gas to the user.

In an embodiment of the invention, the amount of oxygen gas supplied is controlled by controlling the speed of the compressor motor **118** via the variable-speed controller **119**.

Alternatively, or in addition to the variable-speed controller, the supply of oxygen gas may be controlled by the supply valve **160** located in the supply line **121** between the oxygen gas (generator **102** and the user **108**. For example, the supply valve **160** may be movable between at least a first position and a second position, the second position allowing a greater flow of concentrated gaseous oxygen through than the first position. The control unit **110** may cause the supply valve **160** to move from the first position to the second position when one or more of the activity level sensors **152**, **154**,**156** senses an active level of activity of the user **108**. For example, the control unit **110** may include a timer, and when an active level is sensed for a time period exceeding a predetermined timed period, the control unit **110** causes the valve **160** to move from the first position to the second position.

Examples of pressure sensors **150** include, without limitation, a foot switch that indicates when a user is in a standing position compared to a sedentary position, and a seat switch that indicates when a user is in a seated position compared to a standing position.

A pendulum switch is an example of a position sensor **152**. For example, a pendulum switch may include a thigh switch positioned pendulously to indicate one mode when the user is standing, i.e., the switch hangs vertically, and another mode when the user seated, i.e., the thigh switch raised to a more horizontal position. A mercury switch may be used as a position sensor.

An acceleration sensor **158** such as an accelerometer is another example of an activity sensor that provides a signal representing activity of the user.

The physiological condition or metabolic sensor **156** may also function as an activity sensor. The physiological condition sensor **156** may be used to monitor one or more physiological conditions of the user for controlling the oxygen gas generator **102** or for other purposes. Examples of physiological conditions that may be monitored with the sensor **156** include, but without limitation, blood oxygen level, heart rate, respiration rate, blood pressure, EKG, body temperature, and I to E ratio. An oximeter is an example of a sensor that is preferably used in the system **100**. The oximeter measures the blood oxygen level of the user, upon which oxygen production may be at least partially based.

An altitude sensor **158** is an example of an environmental or ambient condition sensor that may sense an environmental or ambient condition upon which control of the supply of oxygen gas to the user may be at least partially based. The altitude sensor **158** may be used alone or in conjunction with any or all of the above sensors, the control unit **110** and the oxygen gas generator **102** to control the supply of oxygen gas to the user in accordance with the sensed altitude or elevation. For example, at higher sensed elevations, where air is less concentrated, the control unit may increase the flow rate of oxygen gas to the user **108** and at lower sensed elevations, where air is more concentrated, the control unit may decrease the flow rate of oxygen gas to the user **108** or maintain it at a control level.

It will be readily apparent to those skilled in the art that one or more additional or different sensors may be used to sense a condition upon which control of the supply of oxygen gas to the user may be at least partially based. Further, any or all of the embodiments described above for regulating the amount of oxygen gas supplied to the user **108**, i.e., variable-speed controller **119**, supply valve **160**, (or alternative embodiments) may be used with the one or more sensors and the control unit **110** to control of the supply of oxygen gas to the user **108**.

D. Control Unit

With reference to FIG. **14**, the control unit **110** may take any well-known form in the art and includes a central microprocessor or CPU **160** in communication with the components of the system described herein via one or more interfaces, controllers, or other electrical circuit elements for controlling and managing the system. The system **100** may include a user interface (FIG. **14**) as part of the control unit **110** or coupled to the control unit **110** for allowing the user, provider, doctor, etc. to enter information, e.g., prescription oxygen level, flow rate, activity level, etc., to control the system **100**.

The main elements of an embodiment of the system **100** have been described above. The following sections describe a number of additional features, one or more of which may be incorporated into the embodiments of the invention described above as one or more separate embodiments of the invention.

II. Conserving Device

With reference to FIG. **15**, a conserving device or demand device **190** may be incorporated into the system **100** to more efficiently utilize the oxygen produced by the oxygen gas generator **102**. During normal respiration, a user **108** inhales for about one-third of the time of the inhale/exhale cycle and exhales the other two-thirds of the time. Any oxygen flow provided to the user **108** during exhalation is of no use to the user **108** and, consequently, the additional battery power used to effectively provide this extra oxygen flow is wasted. A conserving device **190** may include a sensor that senses the inhale/exhale cycle by sensing pressure changes in the cannula **111** or another part of the system **100**, and supply

oxygen only during the inhale portion or a fraction of the inhale portion of the breathing cycle. For example, because the last bit of air inhaled is of no particular use because it is trapped between the nose and the top of the lungs, the conserving device **190** may be configured to stop oxygen flow prior to the end of inhalation, improving the efficiency of the system **100**. Improved efficiency translates into a reduction in the 20 size, weight, cost and power requirements of the system **100**.

The conserving device **190** may be a stand-alone device in the output line of the system **100**, similar to a regulator for scuba diving, or may be coupled to the control unit **110** for controlling the oxygen generator **102** to supply oxygen only during inhalation by the user **108**.

The conserving device **190** may include one or more of the sensors described above. For example, the conserving device may include a sensor for monitoring the respiration rate of the user.

The system **100** may also include a special cannula retraction device for retracting the cannula ill when not in use. Further, the cannula **111** may come in different lengths and sizes.

III. High-Pressure Reservoir

With reference to FIG. **16**, a high-pressure reservoir **164** may be located in a secondary line **166** for delivering an additional supply of oxygen gas to the user **108** when the oxygen gas generator **102** can not meet the oxygen gas demands of the user **108**. Any of the components described below in the secondary line **166** may be coupled to the control unit **110** or a high-pressure reservoir controller **167** (FIG. **14**) for control thereby. Exemplary situations where this additional oxygen gas need may occur are when a user suddenly goes from an inactive state to an active state, e.g., when getting out of a chair, when the system **100** is turned on, or when the system **100** goes from a conserving mode or sleep mode to an active mode. As used herein, secondary line **166** refers to the tubing, connectors, etc. used to connect the components in the line. A valve **168** may be controlled by the control unit **110** to allow gaseous oxygen to flow into the secondary line **166**. The valve **168** may be configured to allow simultaneous flow to both the supply line **121** and the secondary line **166**, flow to only the supply line **121**, or flow to only the secondary line **166**.

A pump or compressor **168**, which is preferably powered by the motor **118**, delivers the oxygen gas at a relatively high pressure, e.g., at least approximately **100** psi, to the high-pressure reservoir **164**.

An oxygen-producing electrochemical cell **171** may be used in conjunction with or instead of the elements described in the secondary line **166** to supply additional oxygen gas to the user **108**. U.S. Pat. No. 6,010,317 to Maget, et al., which is incorporated by reference as though set forth in full, describes an electrochemical cell that may be used for this purpose. For example the electrochemical cell **171** may be used to deliver oxygen gas at a relatively high pressure to the highpressure reservoir **164**.

A pressure sensor **172** is in communication with the high-pressure reservoir **164** and the control unit **110** so that when the pressure in the high-pressure reservoir **164** reaches a certain limit, the control unit **110** causes the valve **168** to direct oxygen to the secondary line **166**.

A regulator **174** may be used to control flow and reduce pressure of the oxygen gas to the user **108**.

A valve **176** may also be controlled by the control unit **110** to allow gaseous oxygen from the high-pressure reservoir **164** to flow into the supply line **121** when the user **108** requires an amount of oxygen gas that cannot be met by the oxygen gas generator **102**. The valve **176** may be configured to allow simultaneous flow from the oxygen gas generator **102** and the high-pressure reservoir **164**, from only the oxygen gas generator **102**, or from only the high-pressure reservoir **164**.

The one or more sensors **106** are interrelated with the control unit **110** and the oxygen gas generator **102** so as to supply an amount of oxygen gas equivalent to the oxygen gas needs of the user **108** based at least in part upon one or more conditions sensed by the one or more sensors **106**. When the oxygen gas generator **102** cannot meet the oxygen gas demands of the user **108**, the control unit **110**, based at least in part upon sensing one or more conditions indicative of the oxygen needs of the user, may cause the high-pressure reservoir **164** (via the valve **176**) to supply the additional oxygen gas needed.

In the scenario where the oxygen gas generator **102** is capable of supplying the full oxygen gas needs of the user **108**, but is simply turned off or is in a conserving or sleep mode, the period of time that the high-pressure reservoir **164** supplies the oxygen gas, i.e., the period of time that the valve **176** connects the high-pressure reservoir **164** with the supply line **121**, is at least as long as the time required for the oxygen gas generator **102** to go from an off or inactive condition to an on or active condition. In another scenario, the control unit **110** may cause oxygen gas to be supplied to the user from the high-pressure reservoir **164** when the demand for gaseous oxygen by the user exceeds the maximum oxygen gas output of the oxygen gas generator **102**. Although the high-pressure reservoir **164** is shown and described as being filled by the oxygen gas generator **102**, in an alternative embodiment, the high-pressure reservoir **164** may be filled by a source outside or external to the system.

IV. Global Positioning System

With reference back to FIG. **12**, in an alternative embodiment of the invention, the system **100** may include a global positioning system (GPS) receiver **200** for determining the location of the system **100**. The location of the receiver **200** and, hence, the user **108** can be transmitted to a remote computer via the telemetry mechanism or modem **151**. This may be desirable for locating the user **108** in the event the user has a health problem, e.g., heart attack, hits a panic button on the system, an alarm is actuated on the system, or for some other reason.

V. Additional Options and Accessories

In addition to the cradle **134**, the portable oxygen concentration system **100** may include additional options and accessories. A number of different types of bags and carrying cases such as, but not by way of limitation, a shoulder bag, a backpack, a fanny pack, a front pack, and a split pack in different colors and patterns may be used to transport the system **100** or other system accessories. A cover may be used to shield the system from inclement weather or other environmental damage. The system **100** may also be transported with a rolling trolley/cart, a suit case, or a travel case. The travel case may be designed to carry the system **100** and include enough room to carry the cannulae **111**, extra batteries, an adapter, etc. Examples of hooks, straps, holders for holding the system **100** include, but not by way of limitation, hooks for seatbelts in cars, hooks/straps for walkers, hooks/straps, for wheel chairs, hooks/straps for hospital beds, hooks for other medical devices such as ventilators, hooks/straps for a golf bag or golf cart, hooks/straps for a bicycle, and a hanging hook. The system **100** may also include one or more alarm options. An alarm of the system **100** may be actuated if, for example, a sensed physiological condition of the user **108** falls outside a

pre-defined range. Further, the alarm may include a panic alarm that may be manually actuated by the user **108**. The alarm may actuate a buzzer or other sounding device on the system **100** and/or cause a communication to be sent via the telemetry mechanism or modem **151** to another entity, e.g., a doctor, a 911 dispatcher, a caregiver, a family member, etc.

Although this invention has been described in terms of certain preferred embodiments, other embodiments apparent to those of ordinary skill in the art are also within the scope of this invention. Accordingly, the scope of this invention is intended to be defined only by the claims that follow.

We claim:

1. A portable oxygen concentrator system adapted to be readily transported by a user, comprising:

a rechargeable energy source;

a concentrator powered by said energy source and adapted to convert ambient air into concentrated oxygen gas for said user, the concentrator including a plurality of adsorption beds and a rotary valve assembly, the rotary valve assembly relatively rotatable with respect to the plurality of adsorption beds to provide valving action for selectively transferring fluids through the plurality of adsorption beds for converting ambient air into concentrated oxygen gas for said user,

wherein the ratio of adiabatic power to oxygen flow for the concentrator is in the range of 6.2 W/LPM to 23.0 W/LPM.

2. The portable oxygen concentrator system of claim **1**, wherein the concentrator includes exactly five adsorption beds.

3. The portable oxygen concentrator system of claim **1**, wherein the rotary valve assembly includes a valve port plate and a rotary valve shoe having respective engaged surfaces and relatively rotatable about a common center of rotation to provide valving action for selectively transferring fluids therethrough, and a centering mechanism other than a motor to center the rotary valve shoe relative to the valve port plate.

4. The portable oxygen concentrator system of claim **3**, wherein the valve port plate and the rotary valve shoe include respective central holes, and the centering mechanism includes a centering pin disposed in the central holes of the valve port plate and rotary valve shoe to center the rotary valve shoe relative to the valve port plate.

5. The portable oxygen concentrator system of claim **3**, wherein the valve port plate and rotary valve shoe include cylindrical sidewalls, and the centering mechanism includes a centering ring disposed around the sidewalls of the valve port plate and the rotary valve shoe to center the rotary valve shoe relative to the valve port plate.

6. The portable oxygen concentrator system of claim **1**, wherein the adsorption beds carry adsorbent material, and include a first end, a second end, an adsorbent media disposed in the adsorption beds between the first end and the second end, a media retention cap disposed between the adsorbent media and the second end, a spring to urge the media retention cap against the adsorbent material to hold the adsorbent media in place, and the spring not located in a flow path of the adsorption beds.

7. The portable oxygen concentrator system of claim **6**, wherein the media retention cap includes a surface that contacts the adsorbent media, the surface including a central hole and a plurality of ribs radiating from the central hole.

8. The portable oxygen concentrator system of claim **6**, wherein the media retention cap includes a bottom base with an interior, and the spring is disposed in the interior of the bottom base.

9. The portable oxygen concentrator system of claim **1**, wherein the rotary valve assembly includes a valve port plate and a rotary valve shoe having respective engaged surfaces and relatively rotatable about a common center of rotation to provide valving action for selectively transferring fluids therethrough, and the portable oxygen concentrator system further includes a motor to rotate the rotary valve shoe, and one or more elastic links to couple the motor to the rotary valve shoe.

10. The portable oxygen concentrator system of claim **9**, wherein the motor includes a drive shaft and a drive wheel with one or more protruding support members, the rotary valve shoe includes one or more protruding support members, and the elastic link connects the one or more protruding support members of the drive wheel with the one or more protruding support members of the rotary valve shoe.

11. The portable oxygen concentrator system of claim **1**, wherein the concentrator includes plastic adsorption beds and a metal cover surrounding the plastic adsorption beds.

12. The portable oxygen concentrator system of claim **11**, wherein the adsorption beds are, elongated, molded, plastic vessels.

13. The portable oxygen concentrator system of claim **12**, wherein the metal cover is made of aluminum and surrounds the adsorption beds to form a product tank.

14. The portable oxygen concentrator system of claim **1**, wherein the rotary valve assembly includes a valve port plate and a rotary valve shoe having respective engaged surfaces and relatively rotatable about a common center of rotation to provide valving action to put the adsorption beds in a pressure swing adsorption cycle, and the pressure swing adsorption cyle includes a number of equalization steps in each adsorption bed ranging from two to eight.

15. The portable oxygen concentrator system of claim **14**, wherein the pressure swing adsorption cyle includes a number of equalization steps in each adsorption bed ranging from two to six.

16. The portable oxygen concentrator system of claim **14**, wherein the pressure swing adsorption cyle includes four equalization steps in each adsorption bed.

17. The portable oxygen concentrator system of claim **14**, wherein the equalization steps include a first equalization down step, a second equalization down step, a first equalization up step, and a second equalization up step.

18. The portable oxygen concentrator system of claim **14**, wherein adsorption beds include a feed end and a product end, and equalization occurs between product ends of adsorption beds.

19. The portable oxygen concentrator system of claim **1**, further including a variable-speed compressor to supply ambient air to the concentrator.

20. The portable oxygen concentrator system of claim **1**, wherein recovery of oxygen from air from the concentrator is 45–71% at about 90% purity.

21. The portable oxygen concentrator system of claim **1**, wherein the rotary valve assembly includes a valve port plate and a rotary valve shoe having respective engaged surfaces and relatively rotatable about a common center of rotation to provide valving action for selectively transferring fluids therethrough, said valve port plate having at least two ports interconnected with at least two adsorption beds, and said rotary valve shoe having a second valve surface opposite said engaged surface with at least one equalization passage to register with said at least two ports of the port plate to equalize pressure in said at least two adsorption beds.

22. The portable oxygen concentrator system of claim 1, wherein a pressure drop through the rotary valve assembly is no more than 1 PSI when the concentrator is producing 3 LPM of oxygen gas.

23. The portable oxygen concentrator system of claim 1, wherein the rotary valve assembly includes a valve port plate and a rotary valve shoe having respective engaged surfaces and relatively rotatable about a common center of rotation to provide valving action for selectively transferring fluids therethrough, the rotation speed of the rotary valve shoe with respect to the valve port plate is varied in order to provide desired cycle timing for a given production of product.

24. The portable oxygen concentrator system of claim 23, further including a variable-speed compressor to supply compressed ambient air to the concentrator, and the rotation speed of the rotary valve shoe with respect to the valve port plate is varied in combination with variation in the speed of the variable-speed compressor in order to provide desired cycle timing and desired supply rate of ambient air to the concentrator for a given production of product.

25. The portable oxygen concentrator system of claim 1, wherein the rotary valve assembly includes a valve port plate and a rotary valve shoe having respective engaged surfaces and relatively rotatable about a common center of rotation to provide valving action for selectively transferring fluids therethrough, and the rotary valve shoe includes a vacuum sealing mechanism that counteracts a pressure force working to unseat the rotary valve shoe from the valve port plate.

26. A portable oxygen concentrator system adapted to be readily transported by a user, comprising;

an internal rechargeable energy source;

an air separation device powered by said energy source and adapted to convert ambient air into concentrated oxygen gas for said user, the air separation device including a plurality of adsorber columns and a rotating valve, the rotating valve relatively rotatable with respect to the plurality of adsorber columns to provide valving action for selectively transferring fluids through the plurality of adsorber columns for converting ambient air into concentrated oxygen gas for said user,

wherein the portable oxygen concentrator system weighs 2–15 pounds and the adsorber columns each including a layered adsorbent bed having two or more distinct adsorbent material layers.

27. The portable oxygen concentrator system of claim 26, wherein the adsorber columns each include a feed end and a product end, and the two or more distinct adsorbent material layers include at least a water adsorption layer and a nitrogen adsorption layer, the water adsorption layer located closer to the feed end than the nitrogen adsorption layer.

28. The portable oxygen concentrator system of claim 27, wherein the water adsorption layer is an activated alumina.

29. The portable oxygen concentrator system of claim 27, wherein the water adsorption layer is a silica gel.

30. The portable oxygen concentrator system of claim 27, wherein the nitrogen adsorption layer is a lithium exchanged X-type zeolite.

31. A portable oxygen concentrator system adapted to be readily transported by a user, comprising:

an internal rechargeable energy source;

an air separation device powered by said energy source and adapted to convert ambient air into concentrated oxygen gas for said user, the air separation device including a plurality of adsorber columns each including a feed end and a product end and at least one valve operable with respect to the plurality of adsorber columns to provide valving action for selectively transferring fluids through the plurality of adsorber columns for convening ambient air into concentrated oxygen gas for said user,

wherein the portable oxygen concentrator system weighs 2–15 pounds and tie adsorber columns each including a layered adsorbent bed having two or more distinct adsorbent material layers, the two or more distinct adsorbent material layers including at least a water adsorption layer and a nitrogen adsorption layer, the water adsorption layer located closer to the feed end than the nitrogen adsorption layer.

32. The portable oxygen concentrator system of claim 31, wherein the water adsorption layer is an activated alumina.

33. The portable oxygen concentrator system of claim 31, wherein the water adsorption layer is a silica gel.

34. The portable oxygen concentrator system of claim 31, wherein the nitrogen adsorption layer is a lithium exchanged X-type zeolite.

* * * * *