US 20010019486A1

(19) United States

(12) Patent Application Publication

Thominet

(10) Pub. No.: US 2001/0019486 A1

(43) Pub. Date: Sep. 6, 2001

(54) ILLUMINATION DEVICE FOR VEHICLE

(76) Inventor: **Vincent Thominet**, Echandens (CH)

Correspondence Address:
STRIKER, STRIKER & STENBY
103 East Neck Road
Huntington, NY 11743 (US)

(21) Appl. No.: **09/793,952**

(22) Filed: **Feb. 27, 2001**

(30) **Foreign Application Priority Data**

Mar. 1, 2000 (DE) 100 09 782.0

Publication Classification

(51) **Int. Cl.**[7] **B60Q 3/04**

(52) **U.S. Cl.** **362/543**; 362/545; 362/800; 362/235

(57) **ABSTRACT**

An illumination device for a vehicle has a plurality of semiconductor sources distributed in a matrix, at least one optical active element which is located in a path of rays of a light emitted by the semiconductor sources, the semiconductor sources are arranged in partial quantities in different defined partial regions of the matrix and the partial quantities of the semiconductor sources are operatable independently from one another.

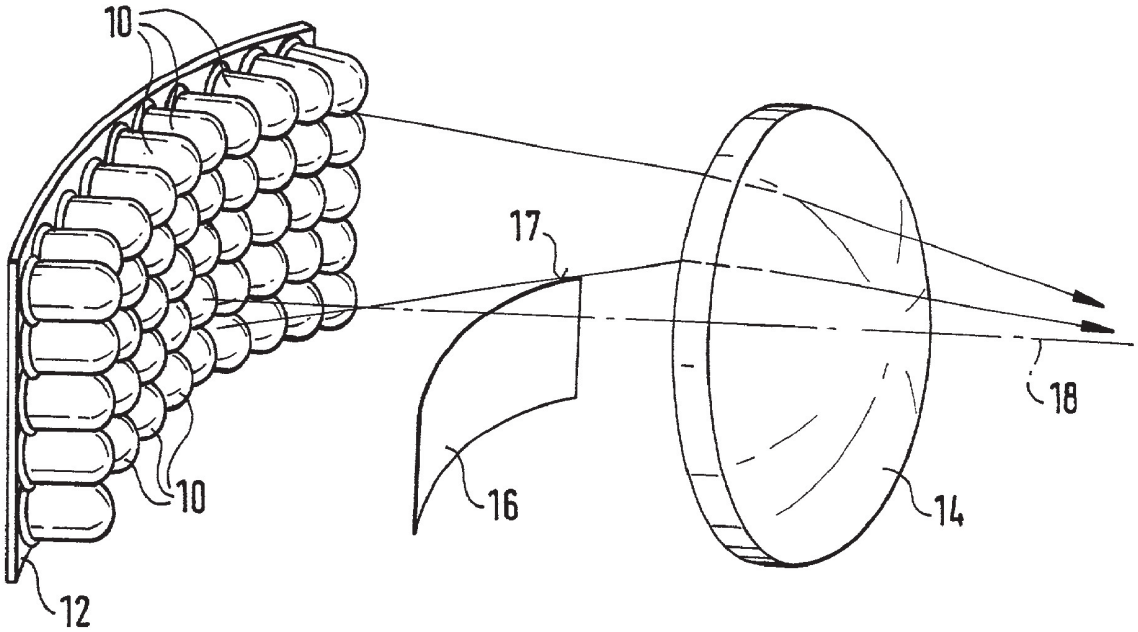

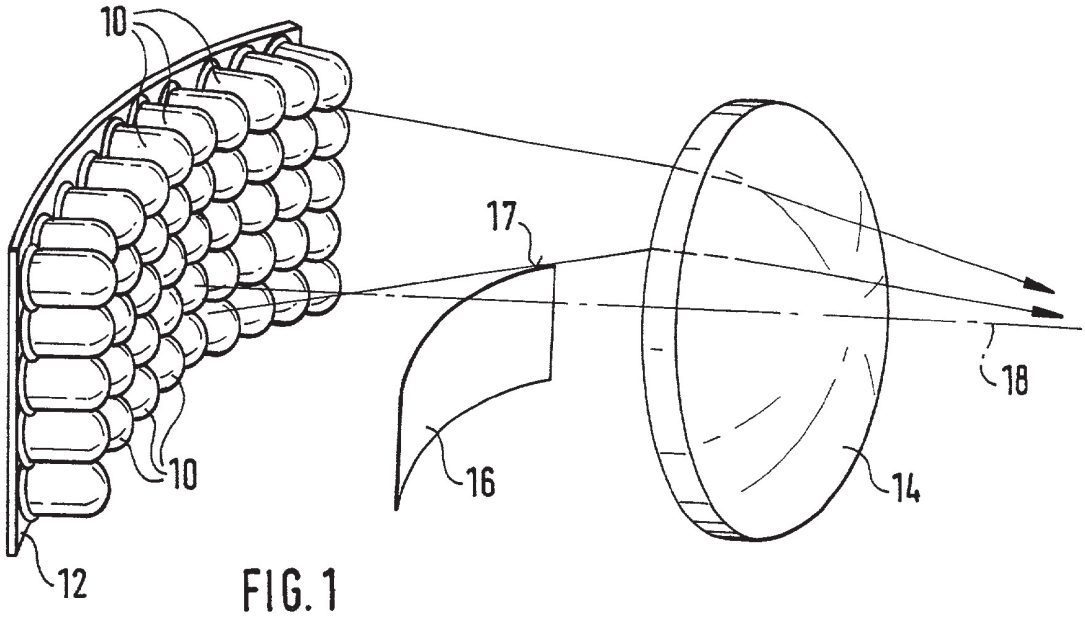

FIG. 1

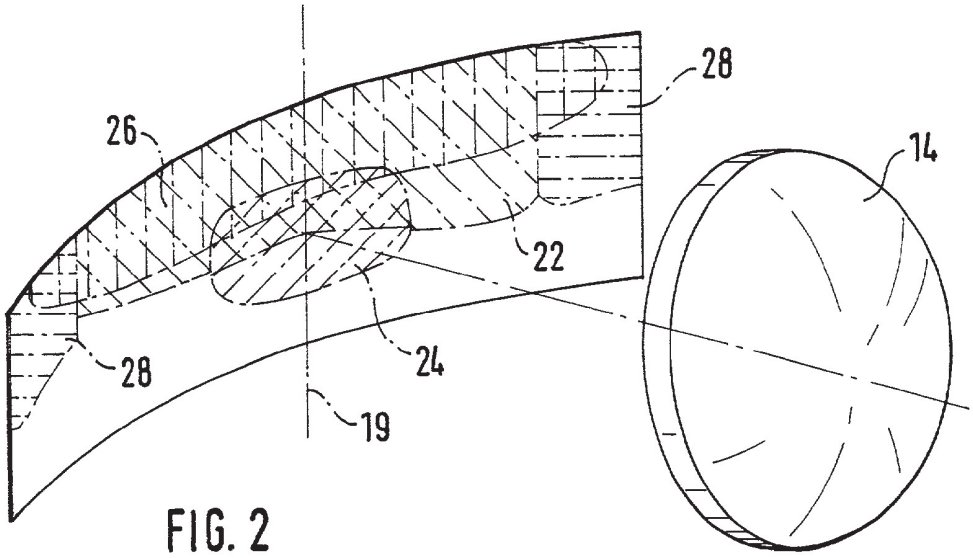

FIG. 2

FIG. 3

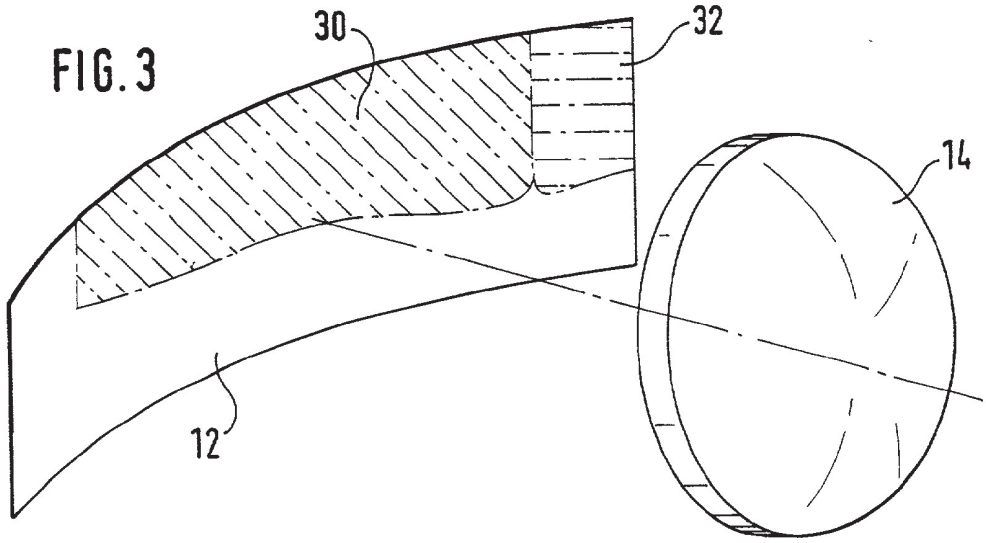

FIG. 4

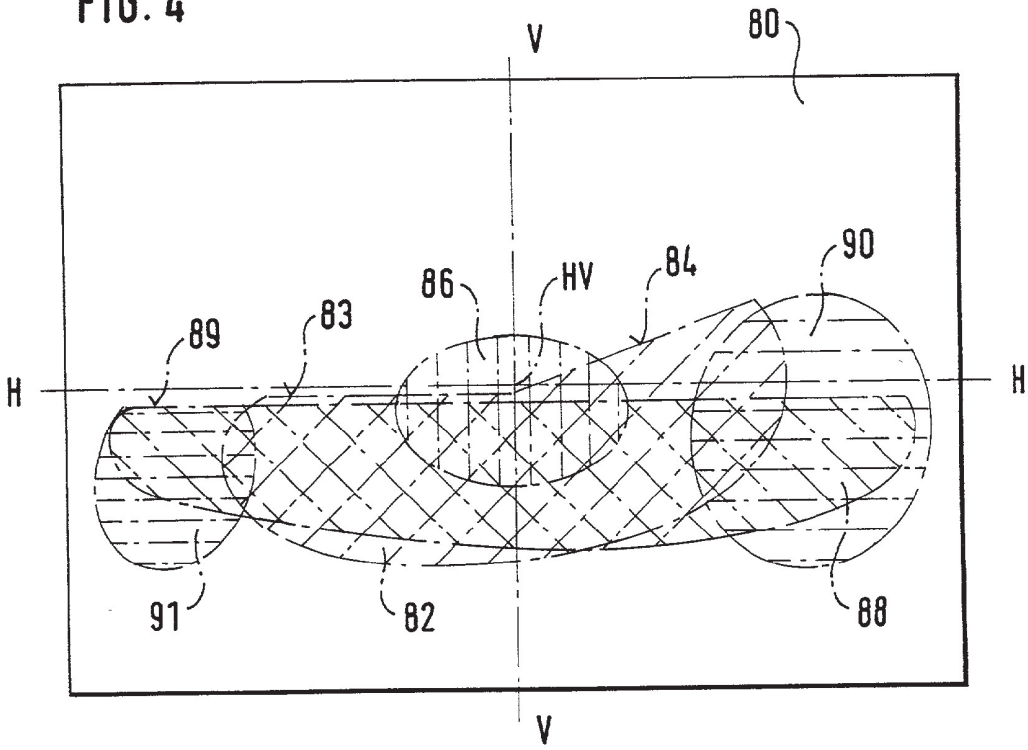

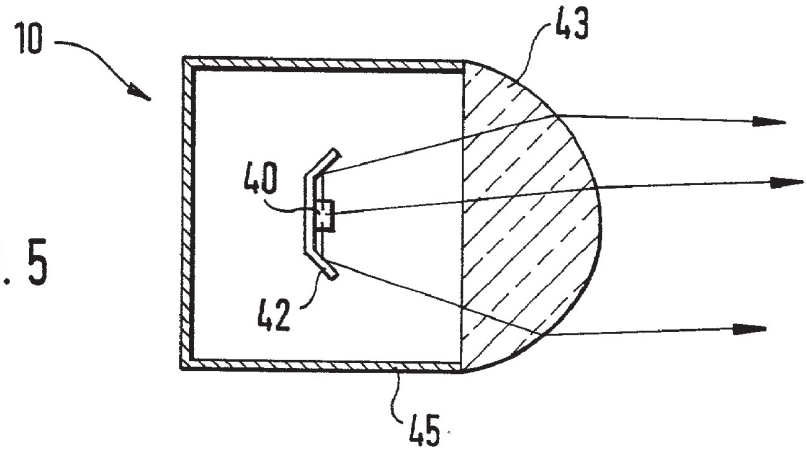

FIG. 5

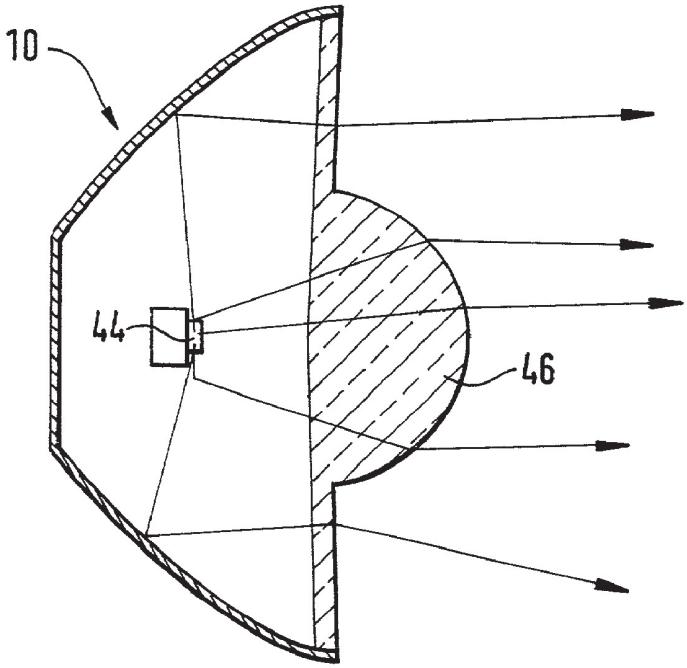

FIG. 6

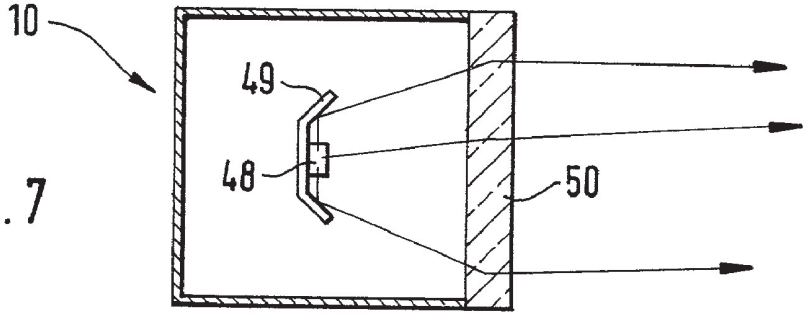

FIG. 7

ILLUMINATION DEVICE FOR VEHICLE

BACKGROUND OF THE INVENTION

[0001] The present invention relates to an illumination device for a vehicle.

[0002] Illumination devices for vehicles are known and wisely used. One of such illumination devices is disclosed for example in the German patent document DE 42 28 895. The illumination device has a plurality of semiconductors light sources arranged in a matrix. In a path of rays of light emitted by the semiconductor light sources, an optically active element is arranged and formed as a disc. It is provided with optical profiles in macroscopic size in form of lenses or prisms or in microscopic size in form of a diffraction grate. The optical profiles in a macroscopic size provide a predetermined characteristic for a light beam which exits the illumination device. The semiconductor light sources emit lights of different colors and each semiconductor light source sends only light of one color. With the optical profiles in microscopic size, a mixture of the lights emitted by the different semiconductor light sources is obtained. Therefore, light exiting the illumination device has a uniform, for example white color.

[0003] This illumination device is however usable only for one function, since the light beam exiting the device always has the same characteristic. The term "characteristic" of the light beam includes here a light color, its direction, its reaching distance, dispersion width and illumination intensity distribution produced by it.

SUMMARY OF THE INVENTION

[0004] Accordingly, it is an object of the present invention to provide an illumination device for a vehicle which has the advantage that by the operation of different partial numbers of semiconductor sources, the characteristic of the light beam exiting the illumination device can be changed so that it can be used for different functions.

[0005] In accordance with another feature of present invention, with the partial numbers of the semiconductor sources arranged in different defined partial regions, light of different colors is emitted and the partial quantities of the semiconductor light sources are operatable for producing a predetermined color of the light beam exiting the illumination device. In this construction the emission of the light beams of different light colors is possible, so that the illumination device can be used for example for different signal functions or for one signal function and as a headlight.

[0006] In accordance with another feature of the present invention, in the matrix a partial region is defined, by which semiconductor light sources produce a concentric light beam. This makes possible the use of the illumination device as a headlight with a strong illumination of a distance located far from the vehicle.

[0007] In accordance with still another feature of present invention, a partial region is defined in the matrix, by which the semiconductor light source produces a horizontally dispersed light beam. This makes possible the use of the illumination device as a headlight with a wider illumination in front to of the vehicle, as is specifically advantageous at low speeds, for example in street traffic and/or with low visibility distance for example in fog.

[0008] In accordance with another feature of present invention, in the matrix at least one partial region is defined, by which the semiconductor light sources produce at one side a light beam oriented to the right or to the left. This allow the use of the illumination device as a headlight with a one-sided oriented illumination in front of the vehicle, as especially advantageous during diving over a curve or in the case of a bending of the vehicle.

[0009] The novel features which are considered as characteristic for the present invention are set forth in particular in the appended claims. The invention itself, however, both as to its construction and its method of operation, together with additional objects and advantages thereof, will be best understood from the following description of specific embodiments when read in connection with the accompanying drawings.

BRIEF DESCRIPTION OF THE DRAWINGS

[0010] **FIG. 1** is a view showing an illumination device for a vehicle in a schematic representation in accordance with the present invention;

[0011] **FIG. 2** is a view showing a matrix of semiconductor light sources of the illumination device in accordance with the first embodiment of present invention;

[0012] **FIG. 3** is a view showing a matrix of semiconductor light sources in accordance with the second embodiment of the present invention;

[0013] **FIG. 4** is a view showing a measuring screen arranged in front of the illumination device in accordance with the present invention and illuminated by light emitted by the latter;

[0014] **FIG. 5** is a view showing a semiconductor source in accordance with a first embodiment of the present invention;

[0015] **FIG. 6** is a view showing a semiconductor source in accordance with the second embodiment of the present invention; and

[0016] **FIG. 7** is a view showing a semiconductor source in accordance with a third embodiment.

DESCRIPTION OF THE PREFERRED EMBODIMENT

[0017] **FIG. 1** shows an illumination device for a vehicle, in particular a motor vehicle. The illumination device is arranged at the front end of the vehicle and is used for example as a headlight. Two substantially identically formed illumination devices can be arranged at the front end, as conventional headlights. The illumination device has a plurality of semiconductor sources **10** which are distributed in a matrix. A support element **12** can be provided, on which the semiconductor light sources **10** are held and electrically contacted.

[0018] The semiconductor light sources **10** can be arranged approximately in one plane, or can be distributed over a concavely curved surface or a stepped surface. The surface for example can have a substantially spherical curvature. In a path of rays of the light emitted by the semiconductor light sources, an optically active element **14** is arranged and formed as a collecting lens. The collecting

lens **14** beams the light which is emitted by the semiconductor light sources **10** and passes through the collecting lens **14**. Thereby it exits the illumination device with a predetermined characteristic.

[**0019**] A screen **16** can be arranged between the semiconductor sources **10** and the collecting lens **14**. The screen screens a part of the light emitted by the semiconductor sources **10** and thereby produces a bright-dark limit of the light beam exiting the illumination device. The screen **16** is arranged substantially under an optical axis **18** of the illumination device. Position and shape of the bright-dark limit of the light beam exiting the illumination device is determined by the position and the shape of the upper edge **17** of the screen **16** which is formed by the collecting lens **14** and revised in height and laterally.

[**0020**] With the use of the illumination device only as a headlight, preferably the semiconductor light sources **10** are utilized, which all emit at least approximately white light. The matrix of the semiconductor light sources **10** in accordance with the first embodiment is shown in **FIG. 2**. Predetermined partial regions are defined on the matrix, in which partial numbers of the semiconductor light sources **10** are arranged. The semiconductor light sources **10** arranged in the different partial regions are actuatable independently from the semiconductor sources **10** arranged in the remaining partial regions. It can be provided that the semiconductor sources **10** of each partial region are jointly contacted or semiconductor light sources of at least one region which is further subdivided in a partial region are jointly contacted, so that they must not be controlled individually for the operation.

[**0021**] A first partial region **22** with a partial quantity of the semiconductor sources **10** is defined on the matrix. It extends downwardly starting from an upper edge of the matrix and is arranged substantially symmetrically at both sides of a vertical central plane **19** of the matrix. In a horizontal direction the partial region **22** extends not completely to the lateral edges of the matrix. The lower edge of the partial region **22** can have for example the shape of the bright-dark limit, which must be provided for the light beam exiting the illumination device. In this case the screen **18** is dispensed with. The lower edge of the partial region **22** can have any other arbitrary form, when the screen **18** is provided for producing the bright-dark limit. When the semiconductor light sources **10** of the pressure region **22** are operated, the light emitted by them produces an asymmetrical low beam beam which exits the illumination device.

[**0022**] **FIG. 4** shows a measuring screen **80** which is arranged at a distance from the illumination device. It represents a projection of a roadway located in front of the illumination device and correspondingly illuminated. The measuring screen **80** has a vertical central plane identified as VV and a horizontal central plane identified as HH. They intersect in a point HV. The light emitted by the semiconductor sources **10** and exiting the illumination device, illuminates the measuring screen **80** in a region **82** which is limited from above by an asymmetrical bright-dark limit **83**, **84**. The bright-dark limit has for example at the counter traffic side which is a left side of the measuring screen **80** in the case of a right traffic, a horizontal portion **83**. At the traffic side itself which is a right side of the measuring screen **80** in the case of a right traffic, it has a portion **84** which raises starting from the portion **83**.

[**0023**] A second partial region **24** with a partial quantity of the semiconductor sources **10** is defined in the matrix. When compared with the partial region **22**, it has a smaller size. The partial region **24** is arranged substantially in the center of the matrix and extends upwardly not to the edge of the matrix and extends downwardly further than the partial region **22**. When the semiconductor sources **10** of the partial region **24** are operated, the light emitted by them is produced as a concentric light beam which exits the illumination device. The concentric light beam illuminates the region **86** on a measuring screen **80**, which has a smaller expansion when compared with the region **82** and partially extends outwardly beyond the bright-dark limit **83**, **84** of the region **82**. With the concentric light beam, first of all the far region in front of the vehicle is illuminated. The semiconductor light sources **10** of the partial region **24** can be operated for example for producing a high beam beam or for improving the illumination of the far region in front of the vehicle at high speeds.

[**0024**] A third partial region **26** can be defined by the partial quantity of the semiconductor sources on the matrix. It has a smaller extension in a vertical direction than the partial region **22**, but a greater extension in a horizontal direction. The partial region **26** can extend over the total width of the matrix. The partial region **26** extends from the upper edge of the matrix downwardly and ends however at a distance from the lower edge of the partial region **22**. The lower edge of the partial region **24** can extend substantially horizontally. When the semiconductor sources **10** of the partial region **26** are operated, then the light emitted by them produces the horizontally dispersed light beam which exits the illumination device. With the horizontally dispersed light beam, a region **88** of the measuring screen **80** is illuminated. It has a greater extension in a horizontal direction than the region **82**, however a smaller extension in a vertical direction. The region **88** is limited upwardly by a substantially horizontal bright-dark limit **89** which extends under the bright-dark limit **83**, **84** of the region **82**. The semiconductor sources **10** of the partial region **26** can be operated for example in the case of low sight distance, such as for example in fog, or in the case of low speeds.

[**0025**] A fourth partial region **28** with a partial quantity of the semiconductor light sources **10** can be defined on the matrix. It is located near the lateral edges of the matrix. The fourth partial region **28** has a substantially smaller extension in a horizontal direction than the first partial region **22** and extension in a vertical direction which is substantially equal to **20** that of the partial region **22**. The fourth partial region **28** extends between the first partial region **22** and the lateral edges of the matrix. When the semiconductor sources **10** of the fourth partial region **28** are operated, then the light emitted by them produces a one-side oriented light beam which exits the illumination device. The fourth partial region **28** which is left as considered from the semiconductor sources **10** in the light outlet direction, illuminates a region **90** of the measuring screen **80** which is arranged at the right of the region **82**. The fourth partial region **28** which is right from the semiconductor light sources **10** as considered in the light outlet direction, illuminates a region **91** of the measuring screen **80** which is arranged at the left of the region **82**. The semiconductor sources **10** of one of the fourth partial regions **28** are preferably operated when the vehicle drives over a curve or during a bending process. The semiconductor light sources **10** of the partial region **28** are operated so

that the light emitted by each of them provides an illumination in the corresponding traveling direction. It can be also provided that the semiconductor light sources **10** of both fourth partial regions **28** are operated. This can be advantageous for example at low speeds of the vehicle, to ensure illumination in front of the vehicle over a great width.

[**0026**] By operation of the light sources **10** of the corresponding partial region **22**, **24**, **26**, **28** in a simple manner it is possible to switch over between the above mentioned different light functions. Such a switchover can be performed manually by the vehicle driver or automatically by a control device depending on the operational parameters of the vehicle, such as for example the speed and/or the steering wheel action and/or depending on other parameters such as for example the wiper and/or sensor system, such as for example for recognizing a counter traffic. The switching over of the operation of the semiconductor sources **10** of the partial region **22**, **24**, **26**, **28** to the operation of the semiconductor light sources of another partial region can be performed with continuous or abrupt transition.

[**0027**] In accordance with a second embodiment of the invention, which is shown in **FIG. 3**, partial regions with partial quantities of the semiconductor sources **10** are defined on the matrix, and the semiconductor sources **10** of the different partial regions emit light of different colors, but the light color of the semiconductor sources **10** of one partial region is uniform. It can be for example provided that in a partial region **30** of the matrix, the semiconductor sources **10** are arranged which emit at least approximately white light. The partial region **30** can take the greater part of the matrix. In a partial region **32** the semiconductor sources **10** can be arranged which emit the colored light, for example at least approximately orange-colored light. The illumination device can be in this case used as a headlight by operating the semiconductor sources **10** of the partial region **30**, and for example as a blinking light by operating the semiconductor sources **10** in the partial region **32**.

[**0028**] Light diodes can be used as a semiconductor sources **10**, and they emit a visible radiation when current flows through them. Moreover laser diodes can be also utilized which provide the direct conversion of electrical energy into laser light. It can be provided that the semiconductor sources **10** can have each a chip for a light generation which emits the light of a predetermined color. Alternatively it can be provided that the semiconductor sources **10** have several, for example three chips, which emit the light of different colors, and a semiconductor providing a mixture of the colors, so that it emits jointly at least approximately white light. It can be also provided that one chip emits red light, one chip emits green light, and one chip emits blue light.

[**0029**] In **FIG. 5** the semiconductor source **10** in accordance with the first embodiment is illustrated. It is provided with one or several chips **40**. The chips **40** are surrounded by the reflector **42**, so that light from the chips **40** is reflected by the reflector. An optical element **43** formed as a lens with a spherical or aspherical curvature is arranged in the path of rays of the light which is emitted by the chips **40** and reflected by the reflector **42**. The light emitted by the chips **40** is reflected by the reflector **42**, collected by the lens **43** and oriented at least approximately parallel. The lens **43** can also provide a mixture of the colors of the lights emitted by the chips **40**, so that at least approximately a white light is emitted by the semiconductor light source **10**. The lens **42** can be composed for example as a synthetic plastic and formed on a covering which surrounds the chip **40** and the reflector **42**.

[**0030**] **FIG. 6** shows a semiconductor source **10** in accordance with a second embodiment of the invention. Here also one of several chips **44** are used for producing light. The chips **44** are surrounded by a casing **45** which on the rear side of the semiconductor sources **10** is formed totally reflecting on the inner side. Therefore the light emitted by them from the chips **44** is reflected, passes through one or several lenses **46** formed on the front side of the semiconductor source **10**, and therefore is collected.

[**0031**] **FIG. 7** shows a semiconductor sources **10** in accordance with the second embodiment of the invention. Here again one of several chips **48** are provided and surrounded by a reflector **49**. Therefore the light emitted by the chip **48** is reflected by the reflector. An optical element **50** is arranged in the path of rays of the light emitted by the chip **48** and reflected by the reflector **49**. It has at least one diffraction-optical structure which deviates the passing light. Preferably, the optical element **50** has three diffraction-optical structures in correspondence with the number and the light color of the chip **48**. They are formed in one layer or over different layers of the element **50**. Each structure is determined in accordance with a light color, so that light of this light color is deviated in a definite manner by the structure. The diffraction-optical structures of the optical element **50** is formed for example a diffraction grater. They can be applied for example as a holographic interference pattern by a photographic or photo-lithographic method.

[**0032**] It will be understood that each of the elements described above, or two or more together, may also find a useful application in other types of constructions differing from the types described above.

[**0033**] While the invention has been illustrated and described as embodied in illumination device for vehicle, it is not intended to be limited to the details shown, since various modifications and structural changes may be made without departing in any way from the spirit of the present invention.

[**0034**] Without further analysis, the foregoing will so fully reveal the gist of the present invention that others can, by applying current knowledge, readily adapt it for various applications without omitting features that, from the standpoint of prior art, fairly constitute essential characteristics of the generic or specific aspects of this invention.

[**0035**] What is claimed as new and desired to be protected by Letters Patent is set forth in the appended claims.

1. An illumination device for a vehicle, comprising a plurality of semiconductor sources distributed in a matrix; at least one optical active element which is located in a path of rays of a light emitted by said semiconductor sources, said semiconductor sources are arranged in partial quantities in different defined partial regions of said matrix and said partial quantities of said semiconductor sources are operatable independently from one another.

2. An illumination device as defined in claim 1, wherein said at least one optical active element is a collecting lens.

3. An illumination device as defined in claim 1, wherein said partial quantities of said semiconductor sources

arranged in said different definite partial regions are formed so that they emit lights of different colors, said partial quantities of said semiconductor sources are operatable for producing a predetermined color of a light beam exiting the illumination device.

4. An illumination device as defined in claim 1, wherein at least one of said partial regions of said matrix is formed so that said at semiconductor sources of said at least one partial region produce an asymmetrical low beam.

5. An illumination device as defined in claim 1, wherein at least one of said partial regions of said matrix is formed so that said semiconductor sources of said at least one partial region produce a concentrated light beam.

6. An illumination device as defined in claim 1, wherein at least one of said partial regions of said matrix is formed so that said semiconductor light sources of said at least one partial region produce a horizontally dispersed light beam.

7. An illumination device as defined in claim 1, wherein at least one partial region of said matrix is formed so that said semiconductor sources of said at least one partial region produce a light beam at an end side oriented to the right or to the left.

8. An illumination device as defined in claim 1, wherein said semiconductor sources of said matrix are arranged in a distributed way over a concavely curved surface.

9. An illumination device as defined in claim 1; and further comprising a screen arranged between said semiconductor sources and said at least one optically active element and operative for producing a bright-dark limit of a light beam exiting the illumination device.

10. An illumination device as defined in claim 1, wherein said partial regions are formed so that a switching over of an operation of partial quantities of semiconductor sources of one of said regions to the operation of partial quantities of said semiconductor sources of another of said region is performed in a continuous transition.

* * * * *