This content is from the eCFR and is authoritative but unofficial.

Title 49 —Transportation
Subtitle B —Other Regulations Relating to Transportation
Chapter V —National Highway Traffic Safety Administration, Department of Transportation
Part 571 —Federal Motor Vehicle Safety Standards
Subpart B —Federal Motor Vehicle Safety Standards

Source: 36 FR 22902, Dec. 2, 1971, unless otherwise noted.
Authority: 49 U.S.C. 322, 30111, 30115, 30117, and 30166; delegation of authority at 49 CFR 1.95.

Editorial Note: Nomenclature changes to part 571 appear at 69 FR 18803, Apr. 9, 2004.

§ 571.108 Standard No. 108; Lamps, reflective devices, and associated equipment.

S1 ***Scope.*** This standard specifies requirements for original and replacement lamps, reflective devices, and associated equipment.

S2 ***Purpose.*** The purpose of this standard is to reduce traffic accidents and deaths and injuries resulting from traffic accidents, by providing adequate illumination of the roadway, and by enhancing the conspicuity of motor vehicles on the public roads so that their presence is perceived and their signals understood, both in daylight and in darkness or other conditions of reduced visibility.

S3 ***Application.*** This standard applies to:

S3.1 Passenger cars, multipurpose passenger vehicles, trucks, buses, trailers (except pole trailers and trailer converter dollies), and motorcycles;

S3.2 Retroreflective sheeting and reflex reflectors manufactured to conform to S8.2 of this standard; and

S3.3 Lamps, reflective devices, and associated equipment for replacement of like equipment on vehicles to which this standard applies.

S4 ***Definitions.***

Adaptive driving beam means a long-range light beam for forward visibility, which automatically modifies portions of the projected light to reduce glare to traffic participants on an ongoing, dynamic basis.

Aiming plane means a plane defined by the surface of the three aiming pads on the lens.

Aiming reference plane means a plane which is perpendicular to the longitudinal axis of the vehicle and tangent to the forwardmost aiming pad on the headlamp.

Aiming screws are the horizontal and vertical adjusting screws with self-locking features used to aim and retain a headlamp unit in the proper position.

Axis of reference means the characteristic axis of the lamp for use as the direction of reference (H = 0°, V = 0°) for angles of field for photometric measurements and for installing the lamp on the vehicle.

Backup lamp means a lamp or lamps which illuminate the road to the rear of a vehicle and provide a warning signal to pedestrians and other drivers when the vehicle is backing up or is about to back up.

VWGoA EX1066
VWGoA v. Spero
IPR2023-00328

Beam contributor means an indivisible optical assembly including a lens, reflector, and light source, that is part of an integral beam headlighting system and contributes only a portion of a headlamp beam.

Cargo lamp is a lamp that is mounted on a multipurpose passenger vehicle, truck, or bus for the purpose of providing illumination to load or unload cargo.

Clearance lamps are lamps which show to the front or rear of the vehicle, mounted on the permanent structure of the vehicle as near as practicable to the upper left and right extreme edges to indicate the overall width and height of the vehicle.

Coated materials means a material which has a coating applied to the surface of the finished sample to impart some protective properties. Coating identification means a mark of the manufacturer's name, formulation designation number, and recommendations for application.

Color Fundamental definitions of color are expressed by Chromaticity Coordinates according to the CIE 1931 Standard Colorimetric System, as described in the CIE 1931 Chromaticity Diagram (incorporated by reference, see § 571.5).

Color bleeding means the migration of color out of a plastic part onto the surrounding surface.

Combination clearance and side marker lamps are single lamps which simultaneously fulfill the requirements of clearance and side marker lamps.

Combination headlamp means a headlamp that is a combination of two different headlamp types chosen from a type F sealed beam headlamp, an integral beam headlamp, or a replaceable bulb headlamp.

Cracking means a separation of adjacent sections of a plastic material with penetration into the specimen.

Crazing means a network of apparent fine cracks on or beneath the surface of materials.

Cutoff means a generally horizontal, visual/optical aiming cue in the lower beam that marks a separation between areas of higher and lower luminance.

Daytime running lamps (DRLs) are steady burning lamps that are used to improve the conspicuity of a vehicle from the front and front sides when the regular headlamps are not required for driving.

Delamination means a separation of the layers of a material including coatings.

Design voltage means the voltage used for design purposes.

Direct reading indicator means a device that is mounted in its entirety on a headlamp or headlamp aiming or headlamp mounting equipment, is part of a VHAD, and provides information about headlamp aim in an analog or digital format.

Effective light-emitting surface means that portion of a lamp that directs light to the photometric test pattern, and does not include transparent lenses, mounting hole bosses, reflex reflector area, beads or rims that may glow or produce small areas of increased intensity as a result of uncontrolled light from an area of $^{1}/_{2}$° radius around a test point.

Effective projected luminous lens area means the area of the orthogonal projection of the effective light-emitting surface of a lamp on a plane perpendicular to a defined direction relative to the axis of reference. Unless otherwise specified, the direction is coincident with the axis of reference.

Exposed means material used in lenses or optical devices exposed to direct sunlight as installed on the vehicle.

Filament means that part of the light source or light emitting element(s), such as a resistive element, the excited portion of a specific mixture of gases under pressure, or any part of other energy conversion sources, that generates radiant energy which can be seen.

Flash means a cycle of activation and deactivation of a lamp by automatic means continuing until stopped either automatically or manually.

Fully opened means the position of the headlamp concealment device in which the headlamp is in the design open operating position.

H-V axis means the line from the center of the principal filament of a lamp to the intersection of the horizontal (H) and vertical (V) lines of a photometric test screen.

Haze means the cloudy or turbid appearance of an otherwise transparent specimen caused by light scattered from within the specimen or from its surface.

Headlamp means a lighting device providing an upper and/or a lower beam used for providing illumination forward of the vehicle.

Headlamp concealment device means a device, with its operating system and components, that provides concealment of the headlamp when it is not in use, including a movable headlamp cover and a headlamp that displaces for concealment purposes.

Headlamp mechanical axis means the line formed by the intersection of a horizontal and a vertical plane through the light source parallel to the longitudinal axis of the vehicle. If the mechanical axis of the headlamp is not at the geometric center of the lens, then the location will be indicated by the manufacturer on the headlamp.

Headlamp test fixture means a device designed to support a headlamp or headlamp assembly in the test position specified in the laboratory tests and whose mounting hardware and components are those necessary to operate the headlamp as installed in a motor vehicle.

Headlighting system midpoint means the intersection of a horizontal plane through the test vehicle's headlamp light sources, a vertical plane through the test vehicle's headlamp light sources and a vertical plane through the test vehicle's centerline.

High-mounted stop lamp means a lamp mounted high and possibly forward of the tail, stop, and rear turn signal lamps intended to give a steady stop warning through intervening vehicles to operators of following vehicles.

Identification lamps are lamps used in groups of three, in a horizontal row, which show to the front or rear or both, having lamp centers spaced not less than [6 in] 15.2 mm nor more than [12 in] 30.4 mm apart, mounted on the permanent structure as near as practicable to the vertical centerline and the top of the vehicle to identify certain types of vehicles.

Integral beam headlamp means a headlamp (other than a standardized sealed beam headlamp designed to conform to paragraph S10.13 or a replaceable bulb headlamp designed to conform to paragraph S10.15) comprising an integral and indivisible optical assembly including lens, reflector, and light source, except that a headlamp conforming to paragraph S10.18.8 or paragraph S10.18.9 may have a lens designed to be replaceable.

License plate lamp means a lamp used to illuminate the license plate on the rear of a vehicle.

Lower beam means a beam intended to illuminate the road and its environs ahead of the vehicle when meeting or closely following another vehicle.

Material means the type and grade of plastics, composition, and manufacturer's designation number and color.

Mechanically aimable headlamp means a headlamp having three pads on the lens, forming an aiming plane used for laboratory photometric testing and for adjusting and inspecting the aim of the headlamp when installed on the vehicle.

Motor driven cycle means every motorcycle, including every motor scooter, with a motor which produces not more than 5 horsepower, and every bicycle with motor attached.

Motorcycle or motor driven cycle headlamp means a major lighting device used to produce general illumination ahead of the vehicle.

Mounting ring means the adjustable ring upon which a sealed beam unit is mounted.

Mounting ring (type F sealed beam) means the adjustable ring upon which a sealed beam unit is mounted and which forces the sealed beam unit to seat against the aiming ring when assembled into a sealed beam assembly.

Multiple compartment lamp means a device which gives its indication by two or more separately lighted areas which are joined by one or more common parts, such as a housing or lens.

Multiple lamp arrangement means an array of two or more separate lamps on each side of the vehicle which operate together to give a signal.

Optically combined means a lamp having a single or two filament light source or two or more separate light sources that operate in different ways, and has its optically functional lens area wholly or partially common to two or more lamp functions.

Overall width means the nominal design dimension of the widest part of the vehicle, exclusive of signal lamps, marker lamps, outside rearview mirrors, flexible fender extensions, mud flaps, and outside door handles determined with doors and windows closed, and the wheels in the straight-ahead position. Running boards may also be excluded from the determination of overall width if they do not extend beyond the width as determined by the other items excluded by this definition.

Parking lamps are lamps on both the left and right of the vehicle which show to the front and are intended to mark the vehicle when parked or serve as a reserve front position indicating system in the event of headlamp failure.

Protected means material used in inner lenses for optical devices where such lenses are protected from exposure to the sun by an outer lens made of materials meeting the requirements for exposed plastics.

Rated voltage means the nominal circuit or vehicle electrical system voltage classification.

Reflex reflectors are devices used on vehicles to give an indication to approaching drivers using reflected light from the lamps of the approaching vehicle.

Remote reading indicator means a device that is not mounted in its entirety on a headlamp or headlamp aiming or headlamp mounting equipment, but otherwise meets the definition of a direct reading indicator.

Replaceable bulb headlamp means a headlamp comprising a bonded lens and reflector assembly and one or two replaceable light sources, except that a headlamp conforming to paragraph S10.18.8 or paragraph S10.18.9 may have a lens designed to be replaceable.

Replaceable light source means an assembly of a capsule, base, and terminals that is designed to conform to the requirements of appendix A or appendix B of 49 CFR part 564 *Replaceable Light Source Information* of this Chapter.

Retaining ring means the clamping ring that holds a sealed beam unit against a mounting ring.

Retaining ring (type F sealed beam) means the clamping ring that holds a sealed beam unit against a mounting ring, and that provides an interface between the unit's aiming/seating pads and the headlamp aimer adapter (locating plate).

School bus signal lamps are alternately flashing lamps mounted horizontally both front and rear, intended to identify a vehicle as a school bus and to inform other users of the highway that such vehicle is stopped on the highway to take on or discharge school children.

Sealed beam headlamp means an integral and indivisible optical assembly including the light source with "SEALED BEAM" molded in the lens.

Sealed beam headlamp assembly means a major lighting assembly which includes one or more sealed beam units used to provide general illumination ahead of the vehicle.

Seasoning means the process of energizing the filament of a headlamp at design voltage for a period of time equal to 1% of design life, or other equivalent method.

Semiautomatic headlamp beam switching device is one which provides either automatic or manual control of beam switching at the option of the driver. When the control is automatic the headlamp beams switch automatically. When the control is manual, the driver may obtain either the lower beam or the upper beam manually regardless of the conditions ahead of the vehicle.

Side marker lamps are lamps which show to the side of the vehicle, mounted on the permanent structure of the vehicle as near as practicable to the front and rear edges to indicate the overall length of the vehicle. Additional lamps may also be mounted at intermediate locations on the sides of the vehicle.

Stop lamps are lamps giving a steady light to the rear of a vehicle to indicate a vehicle is stopping or diminishing speed by braking.

Taillamps are steady burning low intensity lamps used to designate the rear of a vehicle.

Test voltage means the specified voltage and tolerance to be used when conducting a test.

Transition zone means the portion of an adaptive driving beam that occurs between an area of reduced intensity and an area of unreduced intensity.

Turn signal lamps are the signaling element of a turn signal system which indicates the intention to turn or change direction by giving a flashing light on the side toward which the turn will be made.

Turn signal flasher means a device which causes a turn signal lamp to flash as long as it is turned on.

Turn signal operating unit means an operating unit that is part of a turn signal system by which the operator of a vehicle causes the signal units to function.

Upper beam means a beam intended primarily for distance illumination and for use when not meeting or closely following other vehicles.

Vehicle headlamp aiming device or VHAD means motor vehicle equipment, installed either on a vehicle or headlamp, which is used for determining the horizontal or vertical aim, or both the vertical and horizontal aim of the headlamp.

Vehicular hazard warning signal flasher means a device which, as long as it is turned on, causes all the required turn signal lamps to flash.

Vehicular hazard warning signal operating unit means a driver controlled device which causes all required turn signal lamps to flash simultaneously to indicate to approaching drivers the presence of a vehicular hazard.

Visually/optically aimable headlamp means a headlamp which is designed to be visually/optically aimable in accordance with the requirements of paragraph S10.18.9 of this standard.

S5 ***References to SAE publications.*** Each required lamp, reflective device, and item of associated equipment must be designed to conform to the requirements of applicable SAE publications as referenced and subreferenced in this standard. The words "it is recommended that," "recommendations," or "should be" appearing in any SAE publication referenced or subreferenced in this standard must be read as setting forth mandatory requirements.

S6 ***Vehicle requirements.***

S6.1 ***Required lamps, reflective devices, and associated equipment by vehicle type.***

S6.1.1 ***Quantity.*** Except as provided in succeeding paragraphs of this S6.1.1 each vehicle must be equipped with at least the number of lamps, reflective devices, and items of associated equipment specified for that vehicle type and size in Table I and Section 6.6, designed to conform to the requirements of this standard. Multiple license plate lamps and backup lamps may be used to fulfill photometric requirements for those functions.

S6.1.1.1 ***Conspicuity systems.*** Each trailer of 2032 mm or more in overall width, and with a GVWR over 10,000 lbs., except a trailer designed exclusively for living or office use, and each truck tractor must be equipped with retroreflective sheeting, reflex reflectors, or a combination of retroreflective sheeting and reflex reflectors as specified in S8.2.

S6.1.1.2 ***High-mounted stop lamps.*** Each multipurpose passenger vehicle, truck, and bus required by this standard to be equipped with a high-mounted stop lamp, whose vertical centerline, when the vehicle is viewed from the rear, is not located on a fixed body panel but separates one or two moveable body sections, such as doors, which lacks sufficient space to install a single high-mounted stop lamp on the centerline above such body sections, must have two high-mounted stop lamps identical in size and shape.

S6.1.1.2.1 The two lamps must be located at the same height, with one vertical edge of each lamp on the vertical edge of the body section nearest the vehicle centerline.

S6.1.1.3 ***Truck tractor rear turn signal lamps.*** A truck tractor need not be equipped with turn signal lamps mounted on the rear if the turn signal lamps installed at or near the front are of double face construction and are located such that they meet the photometric requirements for double faced turn signal lamps specified in Footnote 6 of Table VII.

S6.1.1.3.1 The flashing signal from a double faced signal lamp must not be obliterated when subjected to external light rays from either in front or behind, at any and all angles.

S6.1.1.4 ***Daytime running lamps.*** Any pair of lamps on the front of a passenger car, multipurpose passenger vehicle, truck, or bus, whether or not required by this standard, other than parking lamps or fog lamps, may be wired to be automatically activated, as determined by the manufacturer of the vehicle, in a steady burning state as daytime running lamps (DRLs) in accordance with S7.10.5.

S6.1.2 ***Color.*** The color in all lamps and reflective devices to which this standard applies must be as specified in Table I. The color identified as amber is identical to the color identified as yellow.

S6.1.3 ***Mounting location.***

S6.1.3.1 Each lamp, reflective device, and item of associated equipment must be securely mounted on a rigid part of the vehicle, other than glazing, that is not designed to be removed except for repair, within the mounting location and height limits as specified in Table I, and in a location where it complies with all applicable photometric requirements, effective projected luminous lens area requirements, and visibility requirements with all obstructions considered.

S6.1.3.2 When multiple lamp arrangements for rear turn signal lamps, stop lamps, or taillamps are used, with only a portion of the lamps installed on a fixed part of the vehicle, the lamp or lamps that are installed to the non-fixed part of the vehicle will be considered auxiliary lamps.

S6.1.3.3 ***License plate lamp.*** The license plate lamp or lamps installed on vehicles other than motorcycles and motor driven cycles must be mounted so as to illuminate the license plate without obstruction from any designed feature unless the lamp or lamps is (are) designed to comply with all the photometric requirements with these obstructions considered.

S6.1.3.4 ***High-mounted stop lamps.***

S6.1.3.4.1 ***Interior mounting.*** A high-mounted stop lamp mounted inside the vehicle must have means provided to minimize reflections from the light of the lamp upon the rear window glazing that might be visible to the driver when viewed directly, or indirectly in the rearview mirror.

S6.1.3.4.2 ***Accessibility.*** Each high-mounted stop lamp must provide access for convenient replacement of bulbs without special tools.

S6.1.3.5 ***Headlamp beam mounting.***

S6.1.3.5.1 ***Vertical headlamp arrangement.***

S6.1.3.5.1.1 Where multiple headlamps with single light sources are installed in a vertical orientation the lower beam must be provided by the uppermost headlamp.

S6.1.3.5.1.2 Where headlamps with two vertically oriented light sources are installed the lower beam must be provided by the uppermost light source or by all light sources.

S6.1.3.5.2 ***Horizontal headlamp arrangement.***

S6.1.3.5.2.1 Where multiple headlamps with single light sources are installed in a horizontal orientation the lower beam must be provided by the most outboard headlamp.

S6.1.3.5.2.2 Where headlamps with two horizontally oriented light sources are installed the lower beam must be provided by the outboard light source or by all light sources.

S6.1.3.6 ***Auxiliary lamps mounted near identification lamps.*** Each auxiliary lamp must be located at least twice the distance from any required identification lamp as the distance between two adjacent required identification lamps.

S6.1.4 ***Mounting height.*** The mounting height of each lamp and reflective device must be measured from the center of the item, as mounted on the vehicle at curb weight, to the road surface.

S6.1.4.1 ***High-mounted stop lamps.***

S6.1.4.1.1 A high-mounted stop lamp mounted below the rear window must have no lens portion lower than 153 mm [6 in] below the lower edge of the rear glazing on convertibles, or 77 mm [3 in] on other passenger cars.

S6.1.5 ***Activation.*** Each lamp must be activated as specified, in the combinations specified, and in response to the inputs specified in Table I and Table II.

S6.1.5.1 ***Hazard warning signal.*** In all passenger cars, multipurpose passenger vehicles, trucks, and buses, the activation of the vehicular hazard warning signal operating unit must cause to flash simultaneously sufficient turn signal lamps to meet, as a minimum, the turn signal photometric requirements of this standard.

S6.1.5.2 ***Simultaneous beam activation.***

S6.1.5.2.1 On any vehicle to which this standard applies where the headlighting system is designed to conform to the photometric requirements of UB1 of Table XVIII and LB1M or LB1V of Table XIX–a, the lamps marked “L” or “LF” may remain permanently activated when the lamps marked “U” or “UF” are activated.

S6.1.5.2.2 On any vehicle to which this standard applies where an integral beam headlighting system is designed to conform to the photometric requirements of UB6 of Table XVIII and LB5M of Table XIX–b or LB4V of Table XIX–c, the lower beam headlamps must remain permanently activated when the upper beam headlamps are activated.

S6.1.5.2.3 On any vehicle to which this section applies where the headlighting system is designed to conform to the photometric requirements of UB2 of Table XVIII and LB2M or LB2V of Table XIX–a, a lower beam light source may remain permanently activated when an upper beam light source is activated if the lower beam light source contributes to the upper beam photometric compliance of the headlighting system.

S6.2 ***Impairment.***

S6.2.1 No additional lamp, reflective device, or other motor vehicle equipment is permitted to be installed that impairs the effectiveness of lighting equipment required by this standard.

S6.2.2 If any required lamp or reflective device is obstructed by motor vehicle equipment (e.g., mirrors, snow plows, wrecker booms, backhoes, winches, etc.) including dealer installed equipment, and cannot meet the applicable photometry and visibility requirements, the vehicle must be equipped with an additional lamp or device of the same type which meet all applicable requirements of this standard, including photometry and visibility.

S6.2.3 ***Headlamp obstructions.***

S6.2.3.1 When activated in the steady burning state, headlamps (excluding headlamps mounted on motorcycles) must not have any styling ornament or other feature, such as a translucent cover or grill, in front of the lens

S6.2.3.2 Headlamp wipers may be used in front of the lens provided that the headlamp system is designed to conform with all applicable photometric requirements with the wiper stopped in any position in front of the lens.

S6.3 ***Equipment combinations.*** Two or more lamps, reflective devices, or items of associated equipment may be combined if the requirements for each lamp, reflective device, and item of associated equipment are met with the following exceptions:

S6.3.1 No high-mounted stop lamp is permitted to be combined with any other lamp or reflective device, other than with a cargo lamp.

S6.3.2 No high-mounted stop lamp is permitted to be optically combined with any cargo lamp.

S6.3.3 No clearance lamp is permitted to be optically combined with any taillamp.

S6.4 ***Lens area, visibility and school bus signal lamp aiming.***

S6.4.1 ***Effective projected luminous lens area.*** Each turn signal lamp, stop lamp, high-mounted stop lamp, and school bus signal lamp must meet the applicable effective projected luminous lens area requirement specified in Tables IV–a, IV–b, and IV–c.

S6.4.2 ***Visibility.*** Each backup lamp, single or combination of dual high-mounted stop lamp(s), and school bus signal lamp must meet the applicable visibility requirement specified in Table V-a.

S6.4.3 ***Visibility options.*** A manufacturer must certify compliance of each lamp function to one of the following visibility requirement options, and it may not thereafter choose a different option for that vehicle:

(a) ***Lens area option.*** When a vehicle is equipped with any lamp listed in Table V-b each such lamp must provide not less than 1250 sq mm of unobstructed effective projected luminous lens area in any direction throughout the pattern defined by the corner points specified in Table V-b for each such lamp; or

(b) ***Luminous intensity option.*** When a vehicle is equipped with any lamp listed in Table V-c each such lamp must provide a luminous intensity of not less than that specified in Table V-c in any direction throughout the pattern defined by the corner points specified in Table V-c for each such lamp when measured in accordance with the photometry test requirements of this standard.

S6.4.4 ***Legacy visibility alternative.*** As an alternative to S6.4.3, each passenger car and motorcycle, and each multipurpose passenger vehicle, truck, trailer, and bus that is of less than 2032 mm overall width, that is manufactured on or before September 1, 2011, and each multipurpose

passenger vehicle, truck, trailer, and bus that is of 2032 mm or more overall width, that is manufactured on or before September 1, 2014, must have each lamp located so that it meets the visibility requirements specified in Table V–d.

S6.4.5 ***School bus signal lamp aiming.*** Each school bus signal lamp must be mounted on the vehicle with its aiming plane vertical and normal to the vehicle longitudinal axis. Aim tolerance must be no more than 5 in vertically and 10 in horizontally at 25 ft from the lamp. If the lamps are aimed or inspected by use of SAE Recommended Practice J602–1963 (incorporated by reference, see § 571.5), the graduation settings for aim must be 2° D and 0° sideways for aiming and the limits must be 3° U to 7° D and from 10° R to 10° L for inspection.

S6.5 ***Marking.*** A summary of the marking requirements of this standard and their location in the standard is contained in Table III.

S6.5.1 ***DOT marking.*** The lens of each original equipment and replacement headlamp, and of each original equipment and replacement beam contributor, and each replacement headlamp lens for an integral beam or replaceable bulb headlamp, must be marked with the symbol “DOT” either horizontally or vertically to indicate certification under 49 U.S.C. 30115.

S6.5.1.1 The DOT marking requirements for conspicuity materials are specified in S8.2 of this standard.

S6.5.1.2 Each original equipment or replacement lamp or reflective device specified in Table I, except for a headlamp, or an item of associated equipment specified in S9 may be marked with the symbol “DOT” which constitutes a certification that it conforms to the requirements of this standard.

S6.5.2 ***DRL marking.*** Each original equipment and replacement lamp used as a daytime running lamp (DRL), unless optically combined with a headlamp, must be permanently marked “DRL” on its lens in letters not less than 3 mm high.

S6.5.3 ***Headlamp markings.***

S6.5.3.1 ***Trademark.*** The lens of each original and replacement equipment headlamp, and of each original and replacement equipment beam contributor must be marked with the name and/or trademark registered with the U.S. Patent and Trademark Office of the manufacturer of such headlamp or beam contributor, of its importer, or any manufacturer of a vehicle equipped with such headlamp or beam contributor. Nothing in this standard authorizes the marking of any such name and/or trademark by one who is not the owner, unless the owner has consented to it.

S6.5.3.2 ***Voltage and trade number.*** Each original and replacement equipment headlamp, and each original and replacement equipment beam contributor must be marked with its voltage and with its part or trade number.

S6.5.3.3 ***Sealed beam headlamp markings.***

S6.5.3.3.1 Each sealed beam headlamp lens must be molded with “sealed beam” and the appropriate designation code as shown in Table II in characters no less than 6.35 mm in size.

S6.5.3.3.2 The face of any character molded on the surface of the lens must not be raised more than 0.5 mm above the lens surface.

S6.5.3.3.3 Type 1C1, 2C1, and 2D1 headlamps must have no raised markings on the outside surface of the lens between the diameters of 40 mm and 90 mm about the lens center.

S6.5.3.3.4 Type 1A1, 2A1, 2B1, and 2E1 headlamps must have no raised markings on the outside surface of the lens within a diameter of 70 mm about the lens center.

S6.5.3.3.5 Type LF, UF, 1G1, 2G1, and 2H1 headlamps must have no raised markings on the outside surface of the lens within a diameter of 35 mm about the lens center.

S6.5.3.3.6 A Type 1C1 replacement headlamp may be marked “1” rather than “1C1”. A Type 2C1 replacement headlamp may be marked “2” rather than “2C1”. A Type 2D1 replacement headlamp may be marked “TOP” or “2” rather than “2D1”.

S6.5.3.4 ***Replaceable bulb headlamp markings.***

S6.5.3.4.1 The lens of each replaceable bulb headlamp must bear permanent marking in front of each replaceable light source with which it is equipped that states either: The HB Type, if the light source conforms to S11 of this standard for filament light sources, or the bulb marking/designation provided in compliance with Section VIII of appendix A of 49 CFR Part 564 (if the light source conforms to S11 of this standard for discharge light sources).

S6.5.3.4.1.1 No marking need be provided if the only replaceable light source in the headlamp is type HB1.

S6.5.3.5 ***Additional headlamp markings.*** Additional marking requirements for headlamps are found in, S10.14.4, S10.15.4, S10.17.2, S10.18.5, S10.18.7, and S10.18.9 of this standard.

S6.5.3.6 Each replacement headlamp lens must also be marked with the manufacturer and the part or trade number of the headlamp for which it is intended, and with the name and/or trademark of the lens manufacturer or importer that is registered with the U.S. Patent and Trademark Office. Nothing in this standard authorizes the marking of any such name and/or trademark by one who is not the owner, unless the owner has consented to it.

S6.6 ***Associated equipment.***

S6.6.1 All vehicles to which this standard applies, except trailers, must be equipped with a turn signal operating unit, a turn signal flasher, a turn signal pilot indicator, a headlamp beam switching device, and an upper beam headlamp indicator meeting the requirements of S9.

S6.6.2 All vehicles to which this standard applies except trailers and motorcycles must be equipped with a vehicular hazard warning operating unit, a vehicular hazard warning signal flasher, and a vehicular hazard warning signal pilot indicator meeting the requirements of S9.

S6.6.3 ***License plate holder.*** Each rear license plate holder must be designed and constructed to provide a substantial plane surface on which to mount the plate.

S6.6.3.1 For motor vehicles on which the license plate is designed to be mounted on the vehicle such that the upper edge of the license plate is 1.2 m or less from the ground, the plane of the license plate mounting surface and the plane on which the vehicle stands must be perpendicular within 30° upward (an installed plate will face above the horizon) and 15° downward (an installed plate will face below the horizon).

S6.6.3.2 For motor vehicles on which the license plate is designed to be mounted on the vehicle such that the upper edge of the license plate is more than 1.2m from the ground, the plane of the license plate mounting surface and the plane on which the vehicle stands must be perpendicular within ±15°.

S6.7 ***Replacement equipment.***

S6.7.1 ***General.***

S6.7.1.1 Each replacement lamp, reflective device, or item of associated equipment, including a combination lamp, must:

(a) Be designed to conform to meet all requirements specified in this standard for that type of lamp, reflective device, or other item of equipment (in the case of a combination lamp, it must meet these requirements for each function); and

(b) Include all of the functions of the lamp, reflective device, or item of associated equipment, including a combination lamp, it is designed to replace or is capable of replacing (other than functions not required by this standard).

S6.7.1.2 Each replacement lamp, reflective device, or item of associated equipment, including a combination lamp, which is designed or recommended for particular vehicle models must be designed so that it does not take the vehicle out of compliance with this standard when the individual device is installed on the vehicle. Except as provided in S6.7.1.3, the determination of whether a vehicle would be taken out of compliance with this standard when an individual device is installed on the vehicle is made without regard to whether additional devices, including separate lamps or reflective devices sold together with the device, would also be installed.

S6.7.1.3 In the case of a lamp or other device that is used on each side of the vehicle in pairs, the determination (for the purposes of S6.7.1.2) of whether a vehicle would be taken out of compliance with this standard when an individual device is installed on the vehicle is made assuming that the other matched paired device would be installed on the other side of the vehicle, whether or not the matched paired devices are sold together. This provision does not limit the responsibilities of manufacturers, distributors, dealers or motor vehicle repair businesses under 49 U.S.C. 30122, *Making safety devices and elements inoperative.*

S6.7.2 ***Version of this standard.*** The requirements of S6.7.1 must be met, at the option of the manufacturer, using either the current version of this standard or the standard in effect at the time of manufacture of the original equipment being replaced.

S7 ***Signal lamp requirements.***

S7.1 ***Turn signal lamps.***

S7.1.1 ***Front turn signal lamps.***

S7.1.1.1 ***Number.*** See Tables I–a and I–c.

S7.1.1.2 ***Color of light.*** See Tables I–a and I–c.

S7.1.1.3 ***Mounting location.*** See Tables I–a and I–c.

S7.1.1.4 ***Mounting height.*** See Tables I–a and I–c.

S7.1.1.5 ***Activation.*** See Tables I–a and I–c.

S7.1.1.6 ***Effective projected luminous lens area.*** See Table IV–a.

S7.1.1.7 ***Visibility.*** See S6.4.

S7.1.1.8 ***Indicator.*** See S9.3.

S7.1.1.9 ***Markings.*** See S6.5.1.2.

S7.1.1.10 ***Spacing to other lamps.***

S7.1.1.10.1 Each front turn signal lamp must also be designed to comply with any additional photometry requirements based on its installed spacing to other lamps as specified by this section. Where more than one spacing relationship exists for a turn signal lamp the requirement must be the one that specifies the highest luminous intensity multiplier of Tables VI–a and VI–b.

S7.1.1.10.2 ***Spacing measurement for non-reflector lamps.*** For any front turn signal lamp that does not employ a reflector to meet photometric requirements, the spacing must be measured from the light source of the turn signal lamp to the lighted edge of any lower beam headlamp, or any lamp such as an auxiliary lower beam headlamp or fog lamp used to supplement the lower beam headlamp.

S7.1.1.10.3 ***Spacing measurement for lamps with reflectors.*** For any front turn signal lamp which employs a reflector, such as a parabolic reflector, to meet photometric requirements, the spacing must be measured from the geometric centroid of the turn signal lamp effective projected luminous lens area to the lighted edge of any lower beam headlamp, or any lamp such as an auxiliary lower beam headlamp or fog lamp used to supplement the lower beam headlamp.

S7.1.1.10.4 ***Spacing based photometric multipliers.***

(a) where the spacing measurement of S7.1.1.10.2 or S7.1.1.10.3 between a turn signal lamp and the lighted edge of any lower beam headlamp is less than 100 mm the photometric multiplier must be 2.5.

(b) where the spacing measurement of S7.1.1.10.2 or S7.1.1.10.3 between a turn signal lamp and the lighted edge of any lamp such as an auxiliary lower beam headlamp or fog lamp used to supplement the lower beam headlamp is at least 75 mm but less than 100 mm the photometric multiplier of Table VI must be 1.5.

(c) where the spacing measurement of S7.1.1.10.2 or S7.1.1.10.3 between a turn signal lamp and the lighted edge of any lamp such as an auxiliary lower beam headlamp or fog lamp used to supplement the lower beam headlamp is at least 60 mm but less than 75 mm the photometric multiplier must be 2.0.

(d) where the spacing measurement of S7.1.1.10.2 or S7.1.1.10.3 between a turn signal lamp and the lighted edge of any lamp such as an auxiliary lower beam headlamp or fog lamp used to supplement the lower beam headlamp is less than 60 mm the photometric multiplier must be 2.5.

S7.1.1.11 ***Multiple compartment lamps and multiple lamps.***

S7.1.1.11.1 A multiple compartment lamp or multiple lamps may be used to meet the photometric requirements of a front turn signal lamp provided the requirements of S6.1.3.2 are met.

S7.1.1.11.2 If a multiple compartment lamp or multiple lamps are used on a passenger car or on a multipurpose passenger vehicle, truck, bus, or trailer of less than 2032 mm in overall width, and the distance between adjacent light sources does not exceed 560 mm for two compartment or lamp arrangements and does not exceed 410 mm for three compartments or lamp arrangements, then the combination of the compartments or lamps must be used to meet the photometric requirements for the corresponding number of lighted sections specified in Tables VI–a or VI–b.

S7.1.1.11.3 If the distance between adjacent light sources exceeds the previously stated dimensions, each compartment or lamp must comply with the photometric requirements for one lighted section specified in Tables VI–a or VI–b

S7.1.1.11.4 ***Lamps installed on vehicles 2032 mm or more in overall width.*** Multiple compartment front turn signal lamps installed on multipurpose passenger vehicles, trucks, and buses 2032 mm or more in overall width require measurement of the photometrics for the entire lamp and not for individual compartments.

S7.1.1.12 ***Ratio to parking lamps and clearance lamps.***

S7.1.1.12.1 When a parking lamp, or a clearance lamp on a multipurpose passenger vehicle, truck, trailer, or bus of 2032 mm or more in overall width, is combined with a front turn signal lamp, the luminous intensity of the front turn signal lamp at each identified test point must not be less than the luminous intensity of the parking lamp or clearance lamp at that same test point times the multiplier shown for that test point in Tables VI-a or VI-b.

S7.1.1.12.2 If a multiple compartment or multiple lamp arrangement is used on a passenger car or on a multipurpose passenger vehicle, truck, bus, or trailer of less than 2032 mm in overall width, and the distance between the optical axes for both the parking lamp and turn signal lamp is within 560 mm for two compartment or lamp arrangements or 410 mm for three compartment or lamp arrangements, then the ratio must be computed with all compartments or lamps lighted.

S7.1.1.12.3 If a multiple compartment or multiple lamp arrangement is used and the distance between optical axes for one of the functions exceeds 560 mm for two compartment or lamp arrangements or 410 mm for three compartments or lamp arrangements, then the ratio must be computed for only those compartments or lamps where the parking lamp and turn signal lamp are optically combined.

S7.1.1.12.4 Where the clearance lamp is combined with the turn signal lamp, and the maximum luminous intensity of the clearance lamp is located below horizontal and within an area generated by a 1.0 degree radius around a test point, the ratio for the test point may be computed using the lowest value of the clearance lamp luminous intensity within the generated area.

S7.1.1.13 ***Photometry.***

S7.1.1.13.1 When tested according to the procedure of S14.2.1, each front turn signal lamp must be designed to conform to the base photometry requirements plus any applicable multipliers as shown in Tables VI–a and VI–b for the number of lamp compartments or individual lamps and the type of vehicle it is installed on.

S7.1.1.13.2 As an alternative to S7.1.1.13.1, a front turn signal lamp installed on a motorcycle may be designed to conform to the photometry requirements of Table XIII-a when tested according to the procedure of S14.2.1.

S7.1.1.14 ***Physical tests.*** Each front turn signal lamp must be designed to conform to the performance requirements of the vibration test, moisture test, dust test, and corrosion test of S14.5, and the color test and plastic optical material test of S14.4.

S7.1.2 ***Rear turn signal lamps.***

S7.1.2.1 ***Number.*** See Tables I–a, I–b, and I–c.

S7.1.2.2 ***Color of light.*** See Tables I–a, I–b, and I–c.

S7.1.2.3 ***Mounting location.*** See Tables I–a, I–b, and I–c and S6.1.3.2.

S7.1.2.4 ***Mounting height.*** See Tables I–a, I–b, and I–c.

S7.1.2.5 ***Activation.*** See Tables I–a, I–b, and I–c.

S7.1.2.6 ***Effective projected luminous lens area.*** See Table IV–a.

S7.1.2.7 ***Visibility.*** See S6.4.

S7.1.2.8 ***Indicator.*** See S9.3.

S7.1.2.9 ***Markings.*** See S6.5.1.2.

S7.1.2.10 ***Spacing to other lamps.*** No requirement.

S7.1.2.11 ***Multiple compartments and multiple lamps.***

S7.1.2.11.1 A multiple compartment lamp or multiple lamps may be used to meet the photometric requirements of a rear turn signal lamp provided the requirements of S6.1.3.2 are met

S7.1.2.11.2 If a multiple compartment lamp or multiple lamps are used on a passenger car or on a multipurpose passenger vehicle, truck, bus, or trailer of less than 2032 mm in overall width, and the distance between adjacent light sources does not exceed 560 mm for two compartment or lamp arrangements and does not exceed 410 mm for three compartment or lamp arrangements, then the combination of the compartments or lamps must be used to meet the photometric requirements for the corresponding number of lighted sections specified in Table VII.

S7.1.2.11.3 If the distance between adjacent light sources exceeds the previously stated dimensions, each compartment or lamp must comply with the photometric requirements for one lighted section specified in Table VII.

S7.1.2.11.4 ***Lamps installed on vehicles 2032 mm or more in overall width.*** Multiple compartment rear turn signal lamps installed on multipurpose passenger vehicles, trucks, and buses 2032 mm or more in overall width require measurement of the photometrics for the entire lamp and not for individual compartments.

S7.1.2.12 ***Ratio to taillamps and clearance lamps.***

S7.1.2.12.1 When a taillamp, or a clearance lamp on a multipurpose passenger vehicle, truck, trailer, or bus of 2032 mm or more in overall width, is combined with a rear turn signal lamp, the luminous intensity of the rear turn signal lamp at each identified test point must not be less than the luminous intensity of the taillamp or clearance lamp at that same test point times the multiplier shown for that test point in Table VII.

S7.1.2.12.2 If a multiple compartment or multiple lamp arrangement is used on a passenger car or on a multipurpose passenger vehicle, truck, bus, or trailer of less than 2032 mm in overall width, and the distance between the optical axes for both the taillamp and turn signal lamp is within 560 mm for two compartment or lamp arrangement or 410 mm for three compartments or lamp arrangements, then the ratio must be computed with all compartments or lamps lighted.

S7.1.2.12.3 If a multiple compartment or multiple lamp arrangement is used and the distance between optical axes for one of the functions exceeds 560 mm for two compartment or lamp arrangements or 410 mm for three compartment or lamp arrangements, then the ratio must be computed for only those compartments or lamps where the taillamp and turn signal lamp are optically combined.

S7.1.2.12.4 Where the taillamp or clearance lamp is combined with the turn signal lamp, and the maximum luminous intensity of the taillamp or clearance lamp is located below horizontal and within an area generated by a 0.5 ° radius around a test point for a taillamp on a passenger car or on a multipurpose passenger vehicle, truck, bus, or trailer of less than 2032 mm in overall width, or by a 1.0 ° radius around a test point for a taillamp or clearance lamp on a vehicle 2032 mm or more in overall width, the ratio for the test point may be computed using the lowest value of the taillamp or clearance lamp luminous intensity within the generated area.

S7.1.2.13 ***Photometry.***

S7.1.2.13.1 Each rear turn signal lamp must be designed to conform to the photometry requirements of Table VII, when tested according to the procedure of S14.2.1, for the number of lamp compartments or individual lamps, the type of vehicle it is installed on, and the lamp color as specified by this section.

S7.1.2.13.2 As an alternative to S7.1.2.13.1, a rear turn signal lamp installed on a motorcycle may be designed to conform to the photometry requirements of Table XIII-a when tested according to the procedure of S14.2.1.

S7.1.2.14 ***Physical tests.*** Each rear turn signal lamp must be designed to conform to the performance requirements of the vibration test, moisture test, dust test, and corrosion test of S14.5, and the color test and plastic optical material test of S14.4.

S7.1.3 ***Combined lamp bulb indexing.***

S7.1.3.1 Each turn signal lamp optically combined with a taillamp or a parking lamp, or clearance lamp where installed on a vehicle 2032 mm or more in overall width, where a two-filament bulb is used must have a bulb with an indexing base and a socket designed so that bulbs with non-indexing bases cannot be used.

S7.1.3.2 Removable sockets must have an indexing feature so that they cannot be re-inserted into lamp housings in random positions, unless the lamp will perform its intended function with random light source orientation.

S7.2 ***Taillamps.***

S7.2.1 ***Number.*** See Tables I-a, I-b, and I-c.

S7.2.2 ***Color of light.*** See Tables I-a, I-b, and I-c.

S7.2.3 ***Mounting location.*** See Tables I-a, I-b, and I-c and S6.1.3.2.

S7.2.4 ***Mounting height.*** See Tables I-a, I-b, and I-c.

S7.2.5 ***Activation.*** See Tables I-a, I-b, and I-c.

S7.2.6 ***Effective projected luminous lens area.*** No requirement.

S7.2.7 ***Visibility.*** See S6.4.

S7.2.8 ***Indicator.*** No requirement.

S7.2.9 ***Markings.*** See S6.5.1.2.

S7.2.10 ***Spacing to other lamps.*** No requirement.

S7.2.11 ***Multiple compartments and multiple lamps.***

S7.2.11.1 A multiple compartment lamp or multiple lamps may be used to meet the photometric requirements of a taillamp provided the requirements of S6.1.3.2 are met.

S7.2.11.2 If a multiple compartment lamp or multiple lamps are used and the distance between the optical axes does not exceed 560 mm for two compartment or lamp arrangements and does not exceed 410 mm for three compartment or lamp arrangements, then the combination of the compartments or lamps must be used to meet the photometric requirements for the corresponding number of lighted sections specified in Table VIII.

S7.2.11.3 If the distance between optical axes exceeds the previously stated dimensions, each compartment or lamp must comply with the photometric requirements for one lighted section specified in Table VIII.

S7.2.11.4 ***Taillamps installed on vehicles 2032 mm or more in overall width.*** A maximum of two taillamps and/or two compartments per side may be mounted closer together than 560 mm providing that each compartment and/or lamp meets the single lighted section photometric requirements specified in Table VIII. Each lamp and/or compartment utilized in this manner must meet the single lighted section requirements for all functions for which it is designed.

S7.2.12 ***Ratio.*** See S7.1.2.12 for rear turn signal lamps and S7.3.12 for stop lamps.

S7.2.13 ***Photometry.*** Each taillamp must be designed to conform to the photometry requirements of Table VIII, when tested according to the procedure of S14.2.1, for the number of lamp compartments or individual lamps and the type of vehicle it is installed on.

S7.2.14 ***Physical tests.*** Each taillamp must be designed to conform to the performance requirements of the vibration test, moisture test, dust test, and corrosion test of S14.5, and the color test and plastic optical material test of S14.4.

S7.3 ***Stop lamps.***

S7.3.1 ***Number.*** See Tables I-a, I-b, and I-c.

S7.3.2 ***Color of light.*** See Tables I-a, I-b, and I-c.

S7.3.3 ***Mounting location.*** See Tables I-a, I-b, and I-c and S6.1.3.2.

S7.3.4 ***Mounting height.*** See Tables I-a, I-b, and I-c.

S7.3.5 ***Activation.*** See Tables I-a, I-b, and I-c.

S7.3.6 ***Effective projected luminous lens area.*** See Table IV-a.

S7.3.7 ***Visibility.*** See S6.4.

S7.3.8 ***Indicator.*** No requirement.

S7.3.9 ***Markings.*** See S6.5.1.2.

S7.3.10 ***Spacing to other lamps.*** No requirement.

S7.3.11 ***Multiple compartments and multiple lamps.***

S7.3.11.1 A multiple compartment lamp or multiple lamps may be used to meet the photometric requirements of a stop lamp provided the requirements of S6.1.3.2 are met.

S7.3.11.2 If a multiple compartment lamp or multiple lamps are used on a passenger car or on a multipurpose passenger vehicle, truck, bus, or trailer of less than 2032 mm in overall width, and the distance between adjacent light sources does not exceed 560 mm for two compartment or lamp arrangements and does not exceed 410 mm for three compartment or lamp arrangements, then the combination of the compartments or lamps must be used to meet the photometric requirements for the corresponding number of lighted sections specified in Table IX.

S7.3.11.3 If the distance between adjacent light sources exceeds the previously stated dimensions, each compartment or lamp must comply with the photometric requirements for one lighted section specified in Table IX.

S7.3.11.4 ***Lamps installed on vehicles 2032 mm or more in overall width.*** Multiple compartment stop lamps installed on multipurpose passenger vehicles, trucks, and buses 2032 mm or more in overall width require measurement of the photometrics for the entire lamp and not for individual compartments.

S7.3.12 ***Ratio to taillamps.***

S7.3.12.1 When a taillamp is combined with a stop lamp, the luminous intensity of the stop lamp at each identified test point must not be less than the luminous intensity of the taillamp at that same test point times the multiplier shown for that test point in Table IX.

S7.3.12.2 If a multiple compartment or multiple lamp arrangement is used on a passenger car or on a multipurpose passenger vehicle, truck, bus, or trailer of less than 2032 mm in overall width, and the distance between the optical axes for both the taillamp and stop lamp is within 560 mm for two compartment or lamp arrangements or 410 mm for three compartment or lamp arrangements, then the ratio must be computed with all compartments or lamps lighted.

S7.3.12.3 If a multiple compartment or multiple lamp arrangement is used and the distance between optical axes for one of the functions exceeds 560 mm for two compartment or lamp arrangements or 410 mm for three compartments or lamp arrangements, then the ratio must be computed for only those compartments or lamps where the taillamp and stop lamp are optically combined.

S7.3.12.4 Where the taillamp is combined with the stop lamp, and the maximum luminous intensity of the taillamp is located below horizontal and within an area generated by a 0.5 ° radius around a test point for a taillamp on a passenger car or on a multipurpose passenger vehicle, truck, bus, or trailer of less than 2032 mm in overall width, or by a 1.0 ° radius around a test point for a taillamp on a vehicle 2032 mm or more in overall width, the ratio for the test point may be computed using the lowest value of the taillamp luminous intensity within the generated area.

S7.3.13 ***Photometry.***

S7.3.13.1 Each stop lamp must be designed to conform to the photometry requirements of Table IX, when tested according to the procedure of S14.2.1, for the number of lamp compartments or individual lamps and the type of vehicle it is installed on.

S7.3.13.2 A stop lamp installed on a motor driven cycle may be designed to conform to the photometry requirements of Table XIII-b when tested according to the procedure of S14.2.1.

S7.3.14 ***Physical tests.*** Each stop lamp must be designed to conform to the performance requirements of the vibration test, moisture test, dust test, and corrosion test of S14.5, and the color test and plastic optical material test of S14.4.

S7.3.15 ***Combined lamp bulb indexing.***

S7.3.15.1 Each stop lamp optically combined with a taillamp where a two-filament bulb is used must have a bulb with an indexing base and a socket designed so that bulbs with non-indexing bases cannot be used.

S7.3.15.2 Removable sockets must have an indexing feature so that they cannot be re-inserted into lamp housings in random positions, unless the lamp will perform its intended function with random light source orientation.

S7.4 ***Side marker lamps.***

S7.4.1 ***Number.*** See Tables I–a, I–b, and I–c.

S7.4.2 ***Color of light.*** See Tables I–a, I–b, and I–c.

S7.4.3 ***Mounting location.*** See Tables I–a, I–b, and I–c.

S7.4.4 ***Mounting height.*** See Tables I–a, I–b, and I–c.

S7.4.5 ***Activation.*** See Tables I–a, I–b, and I–c.

S7.4.6 ***Effective projected luminous lens area.*** No requirement.

S7.4.7 ***Visibility.*** No requirement.

S7.4.8 ***Indicator.*** No requirement.

S7.4.9 ***Markings.*** See S6.5.1.2.

S7.4.10 ***Spacing to other lamps.*** No requirement.

S7.4.11 ***Multiple compartments and multiple lamps.*** No requirement.

S7.4.12 ***Ratio.*** No requirement.

S7.4.13 ***Photometry.***

S7.4.13.1 Each side marker lamp must be designed to conform to the photometry requirements of Table X, when tested according to the procedure of S14.2.1, for the lamp color as specified by this section.

S7.4.13.2 ***Inboard photometry.*** For each motor vehicle less than 30 feet in overall length, the minimum photometric intensity requirements for a side marker lamp may be met for all inboard test points at a distance of 15 feet from the vehicle and on a vertical plane that is perpendicular to the longitudinal axis of the vehicle and located midway between the front and rear side marker lamps.

S7.4.14 ***Physical tests.*** Each side marker lamp must be designed to conform to the performance requirements of the vibration test, moisture test, dust test, and corrosion test of S14.5, and the color test and plastic optical material test of S14.4.

S7.5 ***Clearance and identification lamps.***

S7.5.1 ***Number.*** See Tables I–a and I–b.

S7.5.2 ***Color of light.*** See Tables I–a and I–b.

S7.5.3 ***Mounting location.*** See Tables I–a and I–b.

S7.5.4 ***Mounting height.*** See Tables I–a and I–b.

S7.5.5 ***Activation.*** See Tables I–a and I–b.

S7.5.6 ***Effective projected luminous lens area.*** No requirement.

S7.5.7 ***Visibility.*** No requirement.

S7.5.8 ***Indicator.*** No requirement.

S7.5.9 ***Markings.*** See S6.5.1.2.

S7.5.10 ***Spacing to other lamps.*** No requirement.

S7.5.11 ***Multiple compartments and multiple lamps.*** No requirement.

S7.5.12 ***Ratio.***

S7.5.12.1 ***Clearance lamps.*** See S7.1.1.12 for front turn signal lamps and S7.1.2.12 for rear turn signal lamps.

S7.5.12.2 ***Identification lamps.*** No requirement.

S7.5.13 ***Photometry.*** Each clearance or identification lamp must be designed to conform to the photometry requirements of Table XI, for the applicable lamp color, when tested according to the procedure of S14.2.1.

S7.5.14 ***Physical tests.*** Each clearance and identification must be designed to conform to the performance requirements of the vibration test, moisture test, dust test, and corrosion test of S14.5, and the color test and plastic optical material test of S14.4.

S7.6 ***Backup lamps.***

S7.6.1 ***Number.*** See Table I–a and S6.1.1.

S7.6.2 ***Color of light.***

S7.6.2.1 See Table I–a.

S7.6.2.2 A backup lamp may project incidental red, yellow, or white light through reflectors or lenses that are adjacent, close to, or a part of the lamp assembly.

S7.6.3 ***Mounting location.*** See Table I–a.

S7.6.4 ***Mounting height.*** No requirement.

S7.6.5 ***Activation.*** See Table I–a.

S7.6.6 ***Effective projected luminous lens area.*** No requirement.

S7.6.7 ***Visibility.*** See Table V–a.

S7.6.8 ***Indicator.*** No requirement.

S7.6.9 ***Markings.*** See. S6.5.1.2.

S7.6.10 ***Spacing to other lamps.*** No requirement.

S7.6.11 ***Multiple compartments and multiple lamps.*** No requirement.

S7.6.12 ***Ratio.*** No requirement.

S7.6.13 ***Photometry.*** Each backup lamp must be designed to conform to the photometry requirements of Table XII, when tested according to the procedure of S14.2.1, as specified by this section.

S7.6.14 ***Physical tests.*** Each backup lamp must be designed to conform to the performance requirements of the vibration test, moisture test, dust test, and corrosion test of S14.5, and the color test and plastic optical material test of S14.4.

S7.7 ***License plate lamps.***

S7.7.1 ***Number.*** See Tables I–a, I–b, and I–c and S6.1.1.

S7.7.2 ***Color of light.*** See Tables I–a, I–b, and I–c.

S7.7.3 ***Mounting location.*** See Tables I–a, I–b, and I–c.

S7.7.4 ***Mounting height.*** No requirement.

S7.7.5 ***Activation.*** See Tables I–a, I–b, and I–c.

S7.7.6 ***Effective projected luminous lens area.*** No requirement.

S7.7.7 ***Visibility.*** No requirement.

S7.7.8 ***Indicator.*** No requirement.

S7.7.9 ***Markings.*** See. S6.5.1.2.

S7.7.10 ***Spacing to other lamps.*** No requirement.

S7.7.11 ***Multiple compartments and multiple lamps.*** No requirement.

S7.7.12 ***Ratio.*** No requirement.

S7.7.13 ***Photometry.***

S7.7.13.1 Each license plate lamp must be designed to conform to the photometry requirements of this section when tested according to the procedure of S14.2.2.

S7.7.13.2 An illumination value of no less than 8 lx [0.75 fc] must be met at each test station target location shown in Figure 19.

S7.7.13.3 The ratio of the average of the two highest illumination values divided by the average of the two lowest illumination values must not exceed 20:1 for vehicles other than motorcycles and motor driven cycles.

S7.7.13.4 The ratio of the highest illumination value divided by the average of the two lowest illumination values must not exceed 15:1 for motorcycles and motor driven cycles.

S7.7.14 ***Physical tests.*** Each license plate lamp must be designed to conform to the performance requirements of the vibration test, moisture test, dust test, and corrosion test of S14.5, and the color test and plastic optical material test of S14.4.

S7.7.15 ***Installation.***

S7.7.15.1 Each license plate lamp installed on a vehicle other than a motorcycle or motor driven cycle must be of such size and design as to provide illumination on all parts of a 150 mm by 300 mm test plate.

S7.7.15.2 Each license plate lamp installed on a motorcycle or motor driven cycle must be of such size and design as to provide illumination on all parts of a 100 mm by 175 mm test plate.

S7.7.15.3 The light rays must reach all portions of an imaginary plate of the same size at least 25 mm ahead of the actual plate measured perpendicular to the plane of the plate.

S7.7.15.4 ***Incident light from single lamp.*** When a single lamp as shown in Figure 20 is used to illuminate the license plate, the lamp and license plate holder must bear such relation to each other that at no point on the plate must the incident light make an angle of less than 8° to the plane of the plate, this angle being measured from the edge of the light emitting surface of the lamp farthest from the surface of the plate.

S7.7.15.5 ***Incident light from multiple lamps.*** When two or more lamps as shown in Figure 20 are used to illuminate the license plate, the minimum 8° incident light angle must apply only to that portion of the plate which the particular lamp is designed to illuminate. The angle must be measured in the same manner as S7.7.15.4.

S7.8 ***Parking lamps.***

S7.8.1 ***Number.*** See Table I–a.

S7.8.2 ***Color of light.*** See Table I–a.

S7.8.3 ***Mounting location.*** See Table I–a.

S7.8.4 ***Mounting height.*** See Table I–a.

S7.8.5 ***Activation.*** See Table I–a.

S7.8.6 ***Effective projected luminous lens area.*** No requirement.

S7.8.7 ***Visibility.*** See S6.4.

S7.8.8 ***Indicator.*** No requirement.

S7.8.9 ***Markings.*** See. S6.5.1.2.

S7.8.10 ***Spacing to other lamps.*** No requirement.

S7.8.11 ***Multiple compartments and multiple lamps.*** No requirement.

S7.8.12 ***Ratio.*** See S7.1.1.12 for front turn signal lamps.

S7.8.13 ***Photometry.*** Each parking lamp must be designed to conform to the photometry requirements of Table XIV, when tested according to the procedure of S14.2.1, as specified by this section.

S7.8.14 ***Physical tests.*** Each parking lamp must be designed to conform to the performance requirements of the vibration test, moisture test, dust test, and corrosion test of S14.5, and the color test and plastic optical material test of S14.4.

S7.9 ***High-mounted stop lamps.***

S7.9.1 ***Number.*** See Table I–a and S6.1.1.2.

S7.9.2 ***Color of light.*** See Table I–a.

S7.9.3 ***Mounting location.*** See Table I–a.

S7.9.4 ***Mounting height.*** See Table I–a and S6.1.4.1.

S7.9.5 ***Activation.*** See Table I–a.

S7.9.6 ***Effective projected luminous lens area.*** See Table IV–b.

S7.9.7 ***Visibility.*** See Table V–a.

S7.9.8 ***Indicator.*** No requirement.

S7.9.9 ***Markings.*** See. S6.5.1.2.

S7.9.10 ***Spacing to other lamps.*** No requirement.

S7.9.11 ***Multiple compartments and multiple lamps.*** No requirement.

S7.9.12 ***Ratio.*** No requirement.

S7.9.13 ***Photometry.*** Each high-mounted stop lamp must be designed to conform to the photometry requirements of Table XV, when tested according to the procedure of S14.2.1, as specified by this section.

S7.9.14 ***Physical tests.***

S7.9.14.1 Each high-mounted stop lamp must be designed to conform to the performance requirements of the vibration test of S14.5, and the color test and plastic optical material test of S14.4.

S7.9.14.2 Each high-mounted stop lamp that is not mounted inside the vehicle must be designed to conform to the performance requirements of the moisture test, dust test, and corrosion test of S14.5.

S7.10 ***Daytime running lamps (DRLs).***

S7.10.1 ***Number.*** See Table I–a.

S7.10.2 ***Color of light.*** See Table I–a.

S7.10.3 ***Mounting location.*** See Table I–a.

S7.10.4 ***Mounting height.*** See Table I–a. and S7.10.13(b).

S7.10.5 ***Activation.*** See Table I–a. and S7.10.10.1(c).

S7.10.6 ***Effective projected luminous lens area.*** No requirement.

S7.10.7 ***Visibility.*** No requirement.

S7.10.8 ***Indicator.*** No requirement.

S7.10.9 ***Markings.*** See S6.5.

S7.10.10 ***Spacing to other lamps.***

S7.10.10.1 ***Spacing to turn signal lamps.*** Each DRL not optically combined with a turn signal lamp must be located on the vehicle so that the distance from its lighted edge to the optical center of the nearest turn signal lamp is not less than 100 mm unless,

(a) The luminous intensity of the DRL is not more than 2,600 cd at any location in the beam and the turn signal lamp meets 2.5 times the base front turn signal photometric requirements, or

(b) The DRL is optically combined with a lower beam headlamp and the turn signal lamp meets 2.5 times the base front turn signal photometric requirements, or

(c) The DRL is deactivated when the turn signal or hazard warning signal lamp is activated.

S7.10.11 ***Multiple compartments and multiple lamps.*** No requirement.

S7.10.12 ***Ratio.*** No requirement.

S7.10.13 ***Photometry.*** Each DRL must have a luminous intensity not less than 500 cd at test point H–V, nor more than 3,000 cd at any location in the beam when tested according to the procedure of S14.2.4 as specified by this section, unless it is:

(a) A lower beam headlamp intended to operate as a DRL at full voltage, or a voltage lower than used to operate it as a lower beam headlamp, or

(b) An upper beam headlamp intended to operate as a DRL, whose luminous intensity at test point H–V is not more than 7,000 cd, and whose mounting height is not higher than 864 mm.

S7.10.14 ***Physical tests.*** Each DRL that is not combined with another required lamp must be designed to conform to the performance requirements of the color test and plastic optical material test of S14.4.

S7.11 ***School bus signal lamps.***

S7.11.1 ***Number.*** See Table I–a.

S7.11.2 ***Color of light.*** See Table I–a.

S7.11.3 ***Mounting location.*** See Table I–a.

S7.11.4 ***Mounting height.*** See Table I–a.

S7.11.5 ***Activation.*** See Table I–a.

S7.11.6 ***Effective projected luminous lens area.*** See Table IV–c.

S7.11.7 ***Visibility.*** See Table V–a.

S7.11.8 ***Indicator.*** No requirement.

S7.11.9 ***Markings.*** See. S6.5.1.2.

S7.11.10 ***Spacing to other lamps.*** No requirement.

S7.11.11 ***Multiple compartments and multiple lamps.*** No requirement.

S7.11.12 ***Ratio.*** No requirement.

S7.11.13 ***Photometry.*** Each school bus signal lamp must be designed to conform to the photometry requirements of Table XVII, when tested according to the procedure of S14.2.1, for the lamp color as specified by this section.

S7.11.14 ***Physical tests.*** Each school bus signal lamp must be designed to conform to the performance requirements of the vibration test, moisture test, dust test, and corrosion test of S14.5, and the color test and plastic optical material test of S14.4.

S8 ***Reflective device requirements.***

S8.1 ***Reflex reflectors.***

S8.1.1 ***Number.*** See Tables I–a, I–b, and I–c.

S8.1.2 ***Color.*** See Tables I–a, I–b, and I–c.

S8.1.3 ***Mounting location.*** See Tables I–a, I–b, and I–c.

S8.1.4 ***Mounting height.*** See Tables I–a, I–b, and I–c.

S8.1.5 ***Activation.*** No requirement.

S8.1.6 ***Effective projected luminous lens area.*** No requirement.

S8.1.7 ***Visibility.*** No requirement.

S8.1.8 ***Indicator.*** No requirement.

S8.1.9 ***Markings.*** See. S6.5.1.2.

S8.1.10 ***Spacing to other lamps or reflective devices.*** No requirement.

S8.1.11 ***Photometry.*** Each reflex reflector must be designed to conform to the photometry requirements of Table XVI–a when tested according to the procedure of S14.2.3 for the reflex reflector color as specified by this section.

S8.1.12 ***Physical tests.*** Each reflex reflector must be designed to conform to the performance requirements of the vibration test, moisture test, dust test, and corrosion test of S14.5, and the color test and plastic optical material test of S14.4.

S8.1.1P3 *Alternative side reflex reflector material.* Reflective material conforming to GSA Federal Specification L–S–300 (incorporated by reference, see § 571.5), may be used for side reflex reflectors if this material as used on the vehicle, meets the performance requirements of Table XVI–a.

S8.2 ***Conspicuity systems.*** The requirement for conspicuity systems may be met with retroreflective sheeting, conspicuity reflex reflectors, or a combination of retroreflective sheeting and conspicuity reflex reflectors.

S8.2.1 ***Retroreflective sheeting.***

S8.2.1.1 Retroreflective sheeting must consist of a smooth, flat, transparent exterior film with retroreflective elements embedded or suspended beneath the film so as to form a non-exposed retroreflective optical system.

S8.2.1.2 ***Retroreflective sheeting material.*** Retroreflective sheeting must meet the requirements, except photometry, of ASTM D 4956–90 (incorporated by reference, see § 571.5) for Type V Sheeting. Sheeting of Grade DOT–C2 of no less than 50 mm wide, Grade DOT–C3 of no less than 75 mm wide, or Grade DOT–C4 of no less than 100 mm wide may be used.

S8.2.1.3 ***Certification marking.*** The letters DOT–C2, DOT–C3, or DOT–C4, as appropriate, constituting a certification that the retroreflective sheeting conforms to the requirements of this standard, must appear at least once on the exposed surface of each white or red segment of retroreflective sheeting, and at least once every 300 mm on retroreflective sheeting that is white only. The characters must be not less than 3 mm high, and must be permanently stamped, etched, molded, or printed in indelible ink.

S8.2.1.4 ***Application pattern.***

S8.2.1.4.1 ***Alternating red and white materials.***

S8.2.1.4.1.1 As shown in Figures 12–1 and 12–2, where alternating material is installed, except for a segment that is trimmed to clear obstructions, or lengthened to provide red sheeting near red lamps, alternating material must be installed with each white and red segment having a length of 300 ±150 mm.

S8.2.1.4.1.2 Neither white nor red sheeting must represent more than two thirds the aggregate of any continuous strip marking the width of a trailer, or any continuous or broken strip marking its length.

S8.2.1.5 ***Application location.*** Conspicuity systems need not be installed, as illustrated in Figure 12–2, on discontinuous surfaces such as outside ribs, stake post pickets on platform trailers, and external protruding beams, or to items of equipment such as door hinges and lamp bodies on trailers and body joints, stiffening beads, drip rails, and rolled surfaces on truck tractors.

S8.2.1.6 ***Application spacing.*** As illustrated in Figure 12–2, the edge of any white sheeting must not be located closer than 75 mm to the edge of the luminous lens area of any red or amber lamp that is required by this standard. The edge of any red sheeting must not be located closer than 75 mm to the edge of the luminous lens area of any amber lamp that is required by this standard.

S8.2.1.7 ***Photometry.*** Each retroreflective sheeting must be designed to conform to the photometry requirements of Table XVI–c when tested according to the procedure of S14.2.3 for the color and grade as specified by this section.

S8.2.2 ***Conspicuity reflex reflectors.***

S8.2.2.1 ***Certification marking.*** The exposed surface of each conspicuity reflex reflector must be marked with the letters DOT–C which constitutes a certification that the reflector conforms to the conspicuity reflex reflector requirements of this standard. The certification must be not less than 3 mm high, and must be permanently stamped, etched, molded, or printed in indelible ink.

S8.2.2.2 ***Application pattern.***

S8.2.2.2.1 ***Alternating red and white materials.*** Conspicuity reflex reflectors must be installed in a repetitive pattern of two or three white reflectors alternating with two or three red reflectors, with the center of each reflector not more than 100 mm from the center of each adjacent reflector.

S8.2.2.2.2 ***White material.*** White conspicuity reflex reflectors must be installed with the center of each reflector not more than 100 mm from the center of each adjacent reflector.

S8.2.2.3 ***Photometry.***

S8.2.2.3.1 Each red conspicuity reflex reflector must be designed to conform to the photometry requirements of Table XVI–a for a red reflex reflector and Table XVI–b for a red conspicuity reflex reflector when tested according to the procedure of S14.2.3 as specified by this section.

S8.2.2.3.2 Each white conspicuity reflex reflector installed in only a horizontal orientation must be designed to conform to the photometry requirements of Table XVI–a for a white reflex reflector and Table XVI–b for a white horizontal conspicuity reflex reflector when tested according to the procedure of S14.2.3 as specified by this section.

S8.2.2.3.3 Each white conspicuity reflex reflector installed in a vertical orientation must be designed to conform to the photometry requirements of Table XVI–a for a white reflex reflector, and Table XVI–b for a white horizontal conspicuity reflex reflector and a white vertical conspicuity reflex reflector when tested according to the procedure of S14.2.3 as specified by this section.

S8.2.3 ***Conspicuity system installation on trailers.***

S8.2.3.1 ***Trailer rear.***

S8.2.3.1.1 ***Element 1—alternating red and white materials.*** As shown in Figure 11, a strip of sheeting or conspicuity reflex reflectors, as horizontal as practicable, must be applied across the full width of the trailer, as close to the extreme edges as practicable, and as close as practicable to not less than 375 mm and not more than 1525 mm above the road surface at the strip centerline with the trailer at curb weight.

S8.2.3.1.2 ***Element 2—white.*** (not required for container chassis or for platform trailers without bulkheads).

S8.2.3.1.2.1 As shown in Figure 11, two pairs of strips of sheeting or conspicuity reflex reflectors, each pair consisting of strips 300 mm long of Grade DOT–C2, DOT–C3, or DOT–C4, must be applied horizontally and vertically to the right and left upper contours of the body, as viewed from the rear, as close to the top of the trailer and as far apart as practicable.

S8.2.3.1.2.2 If the perimeter of the body, as viewed from the rear, is other than rectangular, the strips may be applied along the perimeter, as close as practicable to the uppermost and outermost areas of the rear of the body on the left and right sides.

S8.2.3.1.3 ***Element 3—alternating red and white materials.*** (not required for trailers without underride protection devices).

S8.2.3.1.3.1 As shown in Figure 11, a strip of Grade DOT–C2 sheeting no less than 38 mm wide or reflectors must be applied across the full width of the horizontal member of the rear underride protection device.

S8.2.3.2 ***Trailer side—alternating red and white materials.***

S8.2.3.2.1 As shown in Figure 11, a strip of sheeting or conspicuity reflex reflectors must be applied to each side, as horizontal as practicable, originating and terminating as close to the front and rear as practicable, as close as practicable to not less than 375 mm and not more than 1525 mm above the road surface at the strip centerline at curb weight, except that at the location chosen the strip must not be obscured in whole or in part by other motor vehicle equipment or trailer cargo.

S8.2.3.2.2 The strip need not be continuous as long as not less than half the length of the trailer is covered and the spaces are distributed as evenly as practicable.

S8.2.3.2.3 If necessary to clear rivet heads or other similar obstructions, Grade DOT–C2 sheeting may be separated into two 25 mm wide strips of the same length and color, separated by a space of not more than 25 mm and used in place of the retroreflective sheeting that would otherwise be applied.

S8.2.4 ***Conspicuity system installation on truck tractors.***

S8.2.4.1 ***Element 1—alternating red and white materials.*** As shown in Figure 13, two strips of sheeting or conspicuity reflex reflectors, each not less than 600 mm long, located as close as practicable to the edges of the rear fenders, mudflaps, or the mudflap support brackets, must be applied to mark the width of the truck tractor.

S8.2.4.1.1 The strips must be mounted as horizontal as practicable, in a vertical plane facing the rear, on the rear fenders, on the mudflap support brackets, on plates attached to the mudflap support brackets, or on the mudflaps.

S8.2.4.1.2 Strips on mudflaps must be mounted not lower than 300 mm below the upper horizontal edge of the mudflap. If the vehicle is certified with temporary mudflap support brackets, the strips must be mounted on the mudflaps or on plates transferable to permanent mudflap support brackets.

S8.2.4.1.3 For a truck tractor without mudflaps, the strips may be mounted outboard of the frame on brackets behind the rear axle or on brackets ahead of the rear axle and above the top of the rear tires at unladen vehicle height, or they may be mounted directly or indirectly to the back of the cab as close to the outer edges as practicable, above the top of the tires, and not more than 1525 mm above the road surface at unladen vehicle height.

S8.2.4.1.4 If the strips are mounted on the back of the cab, no more than 25% of their cumulative area may be obscured by vehicle equipment as determined in a rear orthogonal view.

S8.2.4.2 ***Element 2—white.*** As shown in Figure 13, two pairs of strips of sheeting or conspicuity reflex reflectors, each pair consisting of strips 300 mm long, must be applied horizontally and vertically as practicable to the right and left upper contours of the cab, as close to the top of the cab and as far apart as practicable.

S8.2.4.2.1 No more than 25% of their cumulative area may be obscured by vehicle equipment as determined in a rear orthogonal view.

S8.2.4.2.2 If one pair must be relocated to avoid obscuration by vehicle equipment, the other pair may be relocated in order to be mounted symmetrically.

S8.2.4.2.3 If the rear window is so large as to occupy all the practicable space, the material may be attached to the edge of the window itself.

S9 ***Associated equipment requirements.***

S9.1 ***Turn signal operating unit.***

S9.1.1 The turn signal operating unit installed on passenger cars, multipurpose passenger vehicles, trucks, and buses less than 2032 mm in overall width must be self-canceling by steering wheel rotation and capable of cancellation by a manually operated control.

S9.1.2 ***Physical tests.*** Each turn signal operating unit must be designed to conform to all applicable performance requirements of S14.9.

S9.2 ***Turn signal flasher.***

S9.2.1 The means of producing the turn signal pilot indicator signal may be incorporated in the flasher. A means of producing an audible signal may be incorporated in the flasher.

S9.2.2 ***Physical tests.*** Each turn signal flasher must be designed to conform to all applicable performance requirements of S14.9.

S9.3 ***Turn signal pilot indicator.***

S9.3.1 Each vehicle equipped with a turn signal operating unit where any turn signal lamp is not visible to the driver must also have an illuminated pilot indicator to provide a clear and unmistakable indication that the turn signal system is activated.

S9.3.2 The indicator must consist of one or more lights flashing at the same frequency as the turn signal lamps.

S9.3.3 The indicator must function satisfactorily under all test conditions imposed on the turn signal flasher in S14.9.

S9.3.4 ***Indicator size and color.***

S9.3.4.1 If the indicator is located inside the vehicle it must emit a green colored light and have a minimum area equivalent to a $^{3}/_{16}$ in diameter circle.

S9.3.4.2 If the indicator is located outside of the vehicle it must emit a yellow light and have a minimum projected illuminated area of 0.1 sq in.

S9.3.5 The minimum required illuminated area of the indicator must be visible to any tangent on the 95th eyellipse as defined in SAE Recommended Practice J941b (1969) (incorporated by reference, see § 571.5), with the steering wheel turned to a straight ahead driving position and in the design location for an adjustable wheel or column.

S9.3.6 ***Turn signal lamp failure.*** Failure of one or more turn signal lamps such that the minimum photometric performance specified in Tables VI or VII is not being met must be indicated by the turn signal pilot indicator by a “steady on”, “steady off”, or by a significant change in the flashing rate, except when a variable-load turn signal flasher is used on a multipurpose passenger vehicle, truck, or bus 2032 mm or more in overall width, on a truck that is capable of accommodating a slide in camper, or on any vehicle equipped to tow trailers.

S9.4 ***Headlamp beam switching device.*** Each vehicle must have a means of switching between lower and upper beams designed and located so that it may be operated conveniently by a simple movement of the driver's hand or foot. The switch must have no dead point and, except as provided by S6.1.5.2, the lower and upper beams must not be energized simultaneously except momentarily for temporary signaling purposes or during switching between beams.

S9.4.1 ***Semiautomatic headlamp beam switching devices.*** As an alternative to S9.4, a vehicle may also be equipped with a semiautomatic means of switching beams that complies with 9.4.1.1 though S9.4.1.4 and either 9.4.1.5 (Option 1) or 9.4.1.6 (Option 2).

S9.4.1.1 ***Operating instructions.*** Each semiautomatic headlamp switching device must include operating instructions to permit a driver to operate the device correctly, including: How to turn the automatic control on and off; how to adjust the sensitivity control (for Option 1 and if provided for Option 2); and any other specific instructions applicable to the device.

S9.4.1.2 ***Manual override.*** The device must include a means convenient to the driver for switching the beam from the one provided.

S9.4.1.3 ***Fail safe operation.*** A failure of the automatic control portion of the device must not result in the loss of manual operation and control of the upper and lower beams.

S9.4.1.4 ***Automatic dimming indicator.*** There must be a convenient means of informing the driver when the device is controlling the headlamps automatically. For headlighting systems certified to Option 1, the device shall not affect the function of the upper beam indicator light.

S9.4.1.5 —*Option 1 (Semiautomatic headlamp beam switching devices other than Adaptive Driving Beam systems).*

S9.4.1.5.1 ***Lens accessibility.*** The device lens must be accessible for cleaning while the device is installed on a vehicle.

S9.4.1.5.2 ***Mounting height.*** The center of the device lens must be mounted no less than 24 inches above the road surface.

S9.4.1.5.3 ***Physical tests.*** Each semiautomatic headlamp beam switching device must be designed to conform to all applicable performance requirements of S14.9.3.11.

S9.4.1.6 —*Option 2 (Adaptive Driving Beam systems).*

S9.4.1.6.1 The system must be capable of detecting system malfunctions (including but not limited to sensor obstruction).

S9.4.1.6.2 If the system detects a malfunction that prevents the system from operating in automatic mode safely and in conformance with these requirements, the headlighting system must operate in manual mode until the malfunction is corrected and must provide the driver with a visible warning that the malfunction exists.

S9.4.1.6.3 When operating in manual mode, the system must provide only switching between lower and upper beams as provided in S9.4.

S9.4.1.6.4 When operating in automatic mode, the system must only switch between lower, upper, and adaptive driving beams. The adaptive driving beams must be designed to conform to the requirements of this section.

S9.4.1.6.4.1 The adaptive driving beams must consist only of area(s) of reduced intensity, area(s) of unreduced intensity, and transition zone(s).

S9.4.1.6.4.2 The adaptive driving beams must be designed to conform to the photometry requirements of Table XXI when tested according to S14.9.3.12, and, for replaceable bulb headlighting systems, when using any replaceable light source designated for use in the system.

S9.4.1.6.4.3 In an area of reduced intensity, the adaptive driving beams must be designed to conform to the photometric intensity requirements of Table XIX as specified in Table II for the specific headlamp unit and aiming method, when tested according to the procedure of S14.2.5, and, for replaceable bulb headlighting systems, when using any replaceable light source designated for use in the system.

S9.4.1.6.4.4 In an area of unreduced intensity, the adaptive driving beams must be designed to conform to the photometric intensity requirements of Table XVIII as specified in Table II for the specific headlamp unit and aiming method, when

tested according to the procedure of S14.2.5, and, for replaceable bulb headlighting systems, when using any replaceable light source designated for use in the system.

S9.4.1.6.4.5 A transition zone not to exceed 1.0 degree in either the horizontal or vertical direction is permitted between an area of reduced intensity and an area of unreduced intensity. The Table XVIII and Table XIX photometric intensity requirements do not apply in a transition zone, except that the maximum at H–V in Table XVIII as specified in Table II for the specific headlamp unit and aiming method may not be exceeded at any point in a transition zone.

S9.4.1.6.4.6 For vehicle speeds below 32 kph (20 mph), the system must provide only lower beams (unless manually overridden according to S9.4.1.2).

S9.4.1.6.4.7 The adaptive driving beams must not be energized simultaneously with the lower or upper beams except as provided in Table II.

S9.4.1.6.5 The adaptive driving beams may be provided by any combination of headlamps or light sources, provided parking lamps are installed. If parking lamps meeting the requirements of this standard are not required according to Table I and are not installed, the adaptive driving beams may be provided using any combination of headlamps but must include the outermost installed headlamps to show the overall width of the vehicle.

S9.5 ***Upper beam headlamp indicator.*** Each vehicle must have a means for indicating to the driver when the upper beams of the headlighting system are activated. The upper beam headlamp indicator is not required to be activated when an Adaptive Driving Beam system is operating in automatic mode.

S9.5.1 ***Indicator size and location.*** The upper beam headlamp indicator must have a minimum area equivalent to that of a $^{3}/_{16}$ in diameter circle, and be plainly visible to drivers of all heights under normal driving conditions when headlamps are required.

S9.6 ***Vehicular hazard warning signal operating unit.***

S9.6.1 The unit may be an independent device or it may be combined with the turn signal operating unit. If combined with the turn signal operating unit, the actuating motion of the hazard function must differ from the actuating motion of the turn signal function.

S9.6.2 ***Operating unit switch.*** The unit must operate independently of the ignition or equivalent switch. If the actuation of the hazard function requires the operation of more than one switch, a means must be provided for actuating all switches simultaneously by a single driver action.

S9.6.3 ***Physical tests.*** Each vehicular hazard warning signal operating unit must be designed to conform to all applicable performance requirements of S14.9.

S9.7 ***Vehicular hazard warning signal flasher.***

S9.7.1 The means of producing the hazard warning signal pilot indicator signal may be incorporated in the flasher. A means of producing an audible signal may be incorporated in the flasher.

S9.7.2 ***Physical tests.*** Each vehicular hazard warning signal flasher must be designed to conform to all applicable performance requirements of S14.9.

S9.8 ***Vehicular hazard warning signal pilot indicator.***

S9.8.1 In vehicles equipped with right hand and left hand turn signal pilot indicators, both pilot indicators and /or a separate pilot indicator must flash simultaneously while the vehicle hazard warning signal operating unit is turned on.

S9.8.2 In vehicles equipped with a single turn signal pilot indicator, a separate vehicular hazard warning signal pilot indicator must flash and the turn signal pilot indicator may flash while the vehicle hazard warning signal operating unit is turned on.

S9.8.3 The indicator must function satisfactorily under all test conditions imposed on the vehicular hazard warning signal flasher in S14.9.

S9.8.4 ***Indicator size and color.*** If the vehicular hazard warning signal pilot indicator is not combined with the turn signal pilot indicator, it must emit a red color and have a minimum area equivalent to a 0.5 in diameter circle.

S10 ***Headlighting system requirements.***

S10.1 ***Vehicle headlighting systems.***

S10.1.1 Each passenger car, multipurpose passenger vehicle, truck and bus must be equipped with a headlighting system conforming to the requirements of Table II and this standard.

S10.1.2 Each motorcycle must be equipped with a headlighting system conforming to S10.17 of this standard.

S10.2 [Reserved]

S10.3 ***Number. See Tables I–a and I–c.***

S10.4 ***Color of light.*** See Tables I–a and I–c.

S10.5 ***Mounting location.*** See Tables I–a and I–c and S6.1.3.5.

S10.6 ***Mounting height.*** See Tables I–a and I–c.

S10.7 ***Activation.*** See Tables I–a and I–c, Table II, and S6.1.5.

S10.8 ***Effective projected luminous lens area.*** No requirement.

S10.9 ***Visibility.*** No requirement.

S10.10 ***Indicator.*** See S9.5.

S10.11 ***Markings.*** See S6.5.

S10.12 ***Spacing to other lamps.*** See S6.1.3.5.

S10.13 ***Sealed beam headlighting systems.*** All sealed beam headlighting systems must be of a type designated in Table II-a. Each sealed beam headlamp must be designed to conform to the specifications furnished with respect to it pursuant to appendix C of part 564 of this chapter and Table II-a of this standard. The dimensions applicable to the design of a specific type are those identified with an “I” for interchangeability specified on the applicable drawing(s) filed in Docket No. NHTSA 98–3397.

S10.13.1 ***Installation.*** A sealed beam headlighting system must consist of the correct number of designated headlamp units as specified for the applicable system in Table II-a. The units must have their beams activated as specified in Table II-a. A system must provide in total not more than two upper beams and two lower beams.

S10.13.2 ***Simultaneous aim.*** Type F sealed beam headlamps may be mounted on common or parallel seating and aiming planes to permit simultaneous aiming of both headlamps provided that there is no provision for adjustment between the common or parallel aiming and seating planes of the two lamps. When tested with any conforming Type UF and LF headlamps in accordance with S14.2.5, the assembly (consisting of the Type UF and LF headlamps, mounting rings, the aiming/seating rings, and aim adjustment mechanism) must be designed to conform to the applicable photometric requirements.

S10.13.3 ***Photometry.*** Each sealed beam headlamp must be designed to conform to the photometry requirements of Table XVIII for upper beam and Table XIX for lower beam as specified in Table II-a for the specific headlamp unit and aiming method, when tested according to the procedure of S14.2.5.

S10.13.4 ***Physical tests.***

S10.13.4.1 Each sealed beam headlamp must be designed to conform to the performance requirements of the corrosion test, vibration test, inward force test (for lamps which are externally aimed only), torque deflection test (for lamps which are externally aimed only), headlamp connector test, headlamp wattage test, and aiming adjustment tests of S14.6.

S10.13.4.2 Each sealed beam headlamp except a Type G or Type H must be designed to conform to the performance requirements of the retaining ring test of S14.6.

S10.13.4.3 Each sealed beam headlamp must be designed to conform to the performance requirements of the color test of S14.4. Each sealed beam headlamp that does not incorporate a glass lens must be designed to conform to the plastic optical materials test of S14.4.

S10.14 ***Integral beam headlighting systems.*** All integral beam headlighting systems must be of a type designated in Table II-c.

S10.14.1 Installation. An integral beam headlighting system must consist of the correct number of designated headlamp units as specified for the applicable system in Table II–c. The units must have their upper and lower beams activated as specified in Table II–c, and their adaptive driving beams (if so equipped) activated as specified in S9.4.1.6.5. A system must provide in total not more than two upper beams, two lower beams, and, optionally, two adaptive driving beams.

S10.14.2 ***Aimability.***

S10.14.2.1 A system that incorporates any headlamp or beam contributor that does not have a VHAD as an integral and indivisible part of the headlamp or beam contributor must be designed so that the applicable photometric requirements are met when any correctly aimed and photometrically conforming headlamp or beam contributor is removed from its mounting and aiming mechanism, and is replaced without reaim by any conforming headlamp or beam contributor of the same type.

S10.14.2.2 A system that incorporates more than one beam contributor providing a lower beam, and/or more than one beam contributor providing an upper beam, shall be designed to conform to the on-vehicle aiming requirements specified in S10.18.8.

S10.14.3 ***Simultaneous aim.*** An integral beam headlighting system consisting of four individual headlamps or beam contributors may have the headlamp units mounted in an assembly to permit simultaneous aiming of the beam(s) contributors, providing that with any complying contributor the assembly complete with all lamps meets the applicable photometric requirements when tested in accordance with S14.2.5.

S10.14.4 ***Markings.*** An integral beam headlamp with a single light source providing the lower beam must have its lens permanently marked with “L”. An integral beam headlamp with a single light source providing the upper beam must have its lens permanently marked with “U”.

S10.14.5 ***Additional light sources.*** An integral beam headlamp may incorporate light sources that are used for purposes other than headlighting and are capable of being replaced.

S10.14.6 ***Photometry.*** Each integral beam headlamp must be designed to conform to the photometry requirements of Table XVIII for upper beam and Table XIX for lower beam as specified in Table II-c for the specific headlamp unit and aiming method, when tested according to the procedure of S14.2.5.

S10.14.7 ***Physical tests.***

S10.14.7.1 Each integral beam headlamp must be designed to conform to the performance requirements of the corrosion test, temperature cycle test, vibration test, inward force test (for lamps which are externally aimed only), headlamp connector test, and aiming adjustment tests of S14.6.

S10.14.7.2 Each integral beam headlamp that is not designed to conform to the performance requirements of the sealing test of S14.6 must be designed to conform to the performance requirements of the connector-corrosion test, dust test, and humidity test of S14.6.

S10.14.7.3 Each integral beam headlamp except those with a glass lens must be designed to conform to the performance requirements of the abrasion test of S14.6.

S10.14.7.4 Each integral beam headlamp except those with a nonreplaceable glass lens must be designed to conform to the performance requirements of the chemical resistance test of S14.6.

S10.14.7.5 Each integral beam headlamp except those with a glass lens and a non-plastic reflector must be designed to conform to the performance requirements of the internal heat test of S14.6.

S10.14.7.6 Each integral beam headlamp incorporating a replaceable lens must be designed to conform to the performance requirements of the chemical resistance of reflectors of replaceable lens headlamps test and the corrosion resistance of reflectors of replaceable lens headlamps test of S14.6.

S10.14.7.7 Each integral beam headlamp capable of being mechanically aimed by externally applied headlamp aiming devices specified in SAE Recommended Practice J602–1980 (incorporated by reference, see § 571.5), must be designed to conform to the performance requirements of the torque deflection test of S14.6.

S10.14.7.8 Each integral beam headlamp must be designed to conform to the performance requirements of the color test of S14.4. Each integral beam headlamp that does not incorporate a glass lens must be designed to conform to the performance requirements of the plastic optical materials test of S14.4.

S10.15 ***Replaceable bulb headlighting systems.*** All replaceable bulb headlighting systems must be of a type designated in Table II-d.

S10.15.1 ***Installation.*** A replaceable bulb headlighting system must consist of either two or four headlamps as specified for the applicable system in Table II–d. The headlamps must have their upper and lower beams activated as specified in Table II–d, and their adaptive driving beams (if so equipped) activated as specified in S9.4.1.6.5. A system must provide in total not more than two upper beams, two lower beams, and, optionally, two adaptive driving beams, and must incorporate not more than two replaceable light sources in each headlamp.

S10.15.2 ***Aiming restrictions.*** Each replaceable bulb headlamp designed to conform to the external aiming requirements of S10.18.7 must have no mechanism that allows adjustment of an individual light source, or if there are two light sources, independent adjustments of each reflector.

S10.15.3 ***Replacement lens reflector units.*** Each lens reflector unit manufactured as replacement equipment must be designed to conform to applicable photometry requirements when any replaceable light source designated for such a unit is inserted in it.

S10.15.4 ***Markings.***

S10.15.4.1 A replaceable bulb headlamp in a four headlamp system providing lower beam must have its lens permanently marked with “L”. A replaceable bulb headlamp in a four headlamp system providing upper beam must have its lens permanently marked with “U”.

S10.15.4.1.1 No such markings are required if the light sources in the headlamp are any combination of dual filament light sources other than HB2.

S10.15.5 ***Additional light sources.*** A replaceable bulb headlamp may incorporate replaceable light sources that are used for purposes other than headlighting.

S10.15.6 ***Photometry.*** Each replaceable bulb headlamp must be designed to conform to the photometry requirements of Table XVIII for upper beam and Table XIX for lower beam as specified in Table II-d for the specific headlamp unit and aiming method, when tested according to the procedure of S14.2.5 using any replaceable light source designated for use in the system under test.

S10.15.7 ***Physical tests.***

S10.15.7.1 Each replaceable bulb headlamp must be designed to conform to the performance requirements of the corrosion test, corrosion-connector test, dust test, temperature cycle test, humidity test, vibration test, inward force test (for lamps which are externally aimed only), headlamp connector test, and aiming adjustment tests of S14.6.

S10.15.7.2 Each replaceable bulb headlamp except those with a glass lens must be designed to conform to the performance requirements of the abrasion test of S14.6.

S10.15.7.3 Each replaceable bulb headlamp except those with a nonreplaceable glass lens must be designed to conform to the performance requirements of the chemical resistance test of S14.6.

S10.15.7.4 Each replaceable bulb headlamp except those with a glass lens and a non-plastic reflector must be designed to conform to the performance requirements of the internal heat test of S14.6.

S10.15.7.5 Each replaceable bulb headlamp incorporating a replaceable lens must be designed to conform to the performance requirements of the chemical resistance of reflectors of replaceable lens headlamps test and the corrosion resistance of reflectors of replaceable lens headlamps test of S14.6.

S10.15.7.6 Each replaceable bulb headlamp capable of being mechanically aimed by externally applied headlamp aiming devices specified in SAE Recommended Practice J602–1980 (incorporated by reference, see § 571.5), must be designed to conform to the performance requirements of the torque deflection test of S14.6.

S10.15.7.7 Each replaceable bulb headlamp must be designed to conform to the performance requirements of the color test of S14.4. Each replaceable bulb headlamp that does not incorporate a glass lens must be designed to conform to the performance requirements of the plastic optical materials test of S14.4.

S10.16 ***Combination headlighting systems.*** All combination headlighting systems must be of a type designated in Table II–b.

S10.16.1 ***Installation.*** A combination headlighting system must consist of the correct number of designated headlamp units as specified for the applicable system in Table II–b. The units must have their upper and lower beams activated as specified in Table II–b, and their adaptive driving beams (if so equipped) activated as specified in S9.4.1.6.5. A system must provide in total not more than two upper beams, two lower beams, and, optionally, two adaptive driving beams. When installed on a motor vehicle, the headlamps (or parts thereof) that provide the lower beam must be of the same type and provide a symmetrical effective projected luminous lens area when illuminated.

S10.16.2 ***Photometry.*** Each combination headlamp must be designed to conform to the photometry requirements of Table XVIII for upper beam and Table XIX for lower beam as specified in Table II-b for the specific headlamp unit and aiming method, when tested according to the procedure of S14.2.5.

S10.16.3 ***Physical tests.***

S10.16.3.1 Any component headlamp of a combination headlighting system that is a Type F sealed beam headlamp must be designed to conform to the performance requirements of S10.13.4.

S10.16.3.2 Any component headlamp of a combination headlighting system that is an integral beam headlamp must be designed to conform to the performance requirements of S10.14.7.

S10.16.3.3 Any component headlamp of a combination headlighting system that is a replaceable bulb headlamp must be designed to conform to the performance requirements of S10.15.7.

S10.17 ***Motorcycle headlighting systems.*** A motorcycle headlighting system may consist of:

(a) One half of any headlighting system of Table II which provides both a full upper beam and full lower beam, and is designed to conform to the requirements for that headlamp type. Where more than one lamp must be used, the lamps shall be mounted vertically, with the lower beam as high as practicable, or

(b) A headlighting system designed to conform to the requirements of paragraphs S10.17.1 through S10.17.5.

S10.17.1 ***Installation.*** The headlighting system installed on a motorcycle must consist of one of the system types specified in this paragraph, and must be located on the front.

S10.17.1.1 ***Single headlamp.***

S10.17.1.1.1 If the system consists of a single headlamp, it must be mounted on the vertical centerline of the motorcycle.

S10.17.1.1.2 If the headlamp contains more than one light source, each light source must be mounted on the vertical centerline with the upper beam no higher than the lower beam, or horizontally disposed about the vertical centerline and mounted at the same height.

S10.17.1.1.3 If the light sources are horizontally disposed about the vertical centerline, the distance between the closest edges of the effective projected luminous lens area in front of the light sources must not be greater than 200 mm.

S10.17.1.2 ***Two headlamps with both beams.***

S10.17.1.2.1 If the system consists of two headlamps, each of which provides both an upper and lower beam, the headlamps must be mounted either at the same height and symmetrically disposed about the vertical centerline or mounted on the vertical centerline.

S10.17.1.2.2 If the headlamps are horizontally disposed about the vertical centerline, the distance between the closest edges of their effective projected luminous lens areas must not be greater than 200 mm.

S10.17.1.3 ***Two headlamps, upper beam and lower beam.***

S10.17.1.3.1 If the system consists of two headlamps, one of which provides an upper beam and one of which provides the lower beam, the headlamps must be located on the vertical centerline with the upper beam no higher than the lower beam, or horizontally disposed about the vertical centerline and mounted at the same height.

S10.17.1.3.2 If the headlamps are horizontally disposed about the vertical centerline, the distance between the closest edges of their effective projected luminous lens areas must not be greater than 200 mm.

S10.17.2 ***Motorcycle replaceable bulb headlamp marking.*** Each replaceable bulb headlamp that is designed to conform to S10.17(b) and that is equipped with a light source other than a replaceable light source meeting the requirements of S11, must have the word “motorcycle” permanently marked on the lens in characters not less than 3 mm in height.

S10.17.3 ***Photometry.*** Each motorcycle headlamp that is not designed to conform to S10.17(a), must be designed to conform to the photometry requirements of Table XX when tested according to the procedure of S14.2.5.

S10.17.4 ***Physical tests.*** Each motorcycle headlamp that is not designed to conform to S10.17(a) must be designed to conform to the performance requirements of the vibration test, moisture test, dust test, and corrosion test of S14.5, the out of focus test of S14.3, the color test of S14.4, and each motorcycle headlamp that does not incorporate a glass lens must be designed to conform to the performance requirements of the plastic optical materials test of S14.4.

S10.17.5 ***Motorcycle headlamp modulation system.*** A headlamp on a motorcycle may be activated to modulate either the upper beam or the lower beam from its maximum intensity to a lesser intensity, provided that:

S10.17.5.1 ***Modulation.***

(a) The rate of modulation must be 240 ±40 cycles per minute.

(b) The headlamp must be operated at maximum power for 50 to 70 percent of each cycle.

(c) The lowest intensity at any test point must be not less than 17 percent of the maximum intensity measured at the same point.

(d) The modulator switch must be wired in the power lead of the beam filament being modulated and not in the ground side of the circuit.

(e) Means must be provided so that both the lower beam and upper beam remain operable in the event of a modulator failure.

(f) The system must include a sensor mounted with the axis of its sensing element perpendicular to a horizontal plane. Headlamp modulation must cease whenever the level of light emitted by a tungsten filament light operating at 3000° Kelvin is either less than 270 lux of direct light for upward pointing sensors or less than 60 lux of reflected light for downward pointing sensors. The light is measured by a silicon cell type light meter that is located at the sensor and pointing in the same direction as the sensor. A Kodak Gray Card (Kodak R–27) is placed at ground level to simulate the road surface in testing downward pointing sensors.

(g) When tested in accordance with the test profile shown in Figure 9, the voltage drop across the modulator when the lamp is on at all test conditions for 12 volt systems and 6 volt systems must not be greater than 0.45 volt. The modulator must meet all the provisions of the standard after completion of the test profile shown in Figure 9.

(h) Means must be provided so that both the lower and upper beam function at design voltage when the headlamp control switch is in either the lower or upper beam position when the modulator is off.

S10.17.5.2 ***Replacement modulators.*** Each modulator not intended as original equipment, or its container, must be labeled with the maximum wattage, and the minimum wattage appropriate for its use.

S10.17.5.2.1 ***Replacement performance.*** Each modulator, not intended as original equipment, must comply with S10.17.5.1

(a) through (g) when connected to a headlamp of the maximum rated power and a headlamp of the minimum rated power, and must provide means so that the modulated beam functions at design voltage when the modulator is off.

S10.17.5.2.2 ***Replacement instructions.*** Instructions, with a diagram, must be provided for mounting the light sensor including location on the motorcycle, distance above the road surface, and orientation with respect to the light.

S10.18 ***Headlamp aimability performance requirements*** (*except for motorcycles*)

S10.18.1 ***Headlamp mounting and aiming.*** Except as provided in this paragraph, each headlamp must be installed on a motor vehicle with a mounting and aiming mechanism that permits aim inspection and adjustment of both vertical and horizontal aim, and is accessible for those purposes without removal of any vehicle parts, except for protective covers removable without the use of tools.

S10.18.1.1 The axis of the light beams must be adjustable to the left, right, up, or down from the designed setting, the amount of adjustability to be determined by practical operating conditions and the type of equipment.

S10.18.1.2 The adjustments must be conveniently made by one person with tools ordinarily available. When the headlamps are secured, the aim will not be disturbed under ordinary conditions of service.

S10.18.2 ***Headlamp aiming systems.*** When a headlamp system is installed on a motor vehicle, it must be aimable with at least one of the following: An externally applied aiming device, as specified in S10.18.7; an on-vehicle headlamp aiming device installed by the vehicle or lamp manufacturer, as specified in S10.18.8; or by visual/optical means, as specified in S10.18.9.

S10.18.3 ***Aim adjustment interaction.*** When installed on the vehicle, adjustment of one aim axis through its full on-vehicle range must not cause the aim of the other axis to deviate more than ±0.76°. If the performance specified is not achievable, the requirements of S10.18.3.1 apply, except that if the aiming mechanism is not a VHAD, the requirements specific to VHADs are not applicable, and the instruction must be specific to the aiming mechanism installed.

S10.18.3.1 Should the mechanism not meet the requirements of S10.18.3, a cautionary label must be placed adjacent to the mechanism stating the caution and including either the reason for the caution or the corrective action necessary. Each such label must also refer the reader to the vehicle operator's manual for complete instructions. Each such vehicle must be equipped with an operator's manual containing the complete instructions appropriate for the mechanism installed.

S10.18.4 ***Horizontal adjustment-visually aimed headlamp.*** A visually/optically aimable headlamp that has a lower beam must not have a horizontal adjustment mechanism unless such mechanism meets the requirements of this standard for on vehicle aiming as specified in S10.18.8.

S10.18.5 ***Optical axis marking.***

S10.18.5.1 ***Optical axis marking-vehicle.*** Each motor vehicle must be equipped with headlamps or beam contributors which have a mark or markings that are visible from the front of the headlamp when installed on the vehicle to identify the optical axis of the headlamp to assure proper horizontal and vertical alignment of the aiming screen or optical aiming equipment. The manufacturer is free to choose the design of the mark or markings. The mark or markings may be on the interior or exterior of the lens or indicated by a mark or central structure on the interior or exterior of the headlamp.

S10.18.5.2 ***Optical axis marking-lamp.*** Each headlamp or beam contributor that is not visually/optically aimable in accordance with S10.18.9 of this standard must be equipped with fiducial marks, aiming pads, or similar references of sufficient detail and accuracy, for determination of an appropriate vehicle plane to be used with the photometric procedures of S14.2.5 for correct alignment with the photometer axis when being tested for photometric compliance, and to serve for the aiming reference when the headlamp or beam contributor is installed on a motor vehicle. The fiducial marks, aiming pads, or similar references are protrusions, bubble vials, holes, indentations, ridges, scribed lines, or other readily identifiable marks established and described by the vehicle or headlamp manufacturer.

S10.18.5.3 ***Optical axis marking-visual/optical aim headlamp.*** There must be a mark or markings identifying the optical axis of the headlamp visible from the front of the headlamp when installed on the vehicle, to assure proper horizontal and vertical alignment of the aiming screen or optical aiming equipment with the headlamp being aimed. The manufacturer is free to choose the design of the mark or markings. The mark or markings may be on the interior or exterior of the lens or indicated by a mark or central structure on the interior or exterior of the headlamp.

S10.18.6 ***Moveable reflectors.*** Each headlamp aimed by moving the reflector relative to the lens and headlamp housing, or vice versa, must conform with the photometric requirements applicable to it when tested according to the procedure of S14.2.5 with the lens at any position relative to the reflector within the full range of vertical pitch on the vehicle on which the headlamp system is installed and a horizontal range of ±2.5°. Additionally it must comply with the aiming adjustment requirements of S14.6.

S10.18.7 ***External aiming.*** Each headlighting system that is capable of being mechanically aimed by externally applied headlamp aiming devices must be mechanically aimable using the equipment specified in SAE Recommended Practice J602–1980 (incorporated by reference, see § 571.5), without the removal of any ornamental trim rings, covers, wipers or other vehicle parts.

S10.18.7.1 ***Headlamp aiming device locating plates.*** Each headlighting system which is designed to use the Headlamp Aiming Device Locating Plates with adjustable legs for the 100 × 165 mm unit and the 142 × 200 mm unit, and which has adjustable length legs, must meet the following requirements:

S10.18.7.1.1 The lens must have three aiming pads which meet the requirements of Figure 4, *Dimensional Specifications for Location of Aiming Pads on Replaceable Bulb Headlamp Units.* The aiming pads need not be centered at the geometric center of the lens, or on the optical axis. Except as provided in S10.18.7.1.2, a whole number,

which represents the distance in tenths of an inch (i.e. 0.3 inch = 3) from the aiming reference plane to the respective aiming pads which are not in contact with that plane, must be inscribed adjacent to each respective aiming pad on the lens. The height of these numbers must be not less than .157 inch (4 mm). If there is interference between the plane and the area of the lens between the aiming pads, the whole number represents the distance to a secondary plane. The secondary plane must be located parallel to the aiming reference plane and as close to the lens as possible without causing interference.

S10.18.7.1.2 If the most forward aiming pad is the lower inboard aiming pad, then the dimensions may be placed anywhere on the lens. The dimension for the outboard aiming pad (Dimension F in Figure 4) must be followed by the letter “H” and the dimension for the center aiming pad must be followed by the letter “V.” The dimensions must be expressed in tenths of an inch.

S10.18.7.2 ***Nonadjustable headlamp aiming device locating plates.*** Each headlamp may be designed to use the nonadjustable Headlamp Aiming Device Locating Plate for the 100 × 165 mm unit, the 142 × 200 mm unit, the 146 mm diameter unit, or the 178 mm diameter unit of SAE Recommended Practice J602–1980 (incorporated by reference, see § 571.5), or the 92 × 150 mm Type F unit, and incorporate lens-mounted aiming pads as specified for those units pursuant to Appendix C of part 564 of this chapter. If so designed, no additional lens marking is necessary to designate the type of plate or dimensions.

S10.18.8 ***On-vehicle aiming.*** Each headlighting system that is capable of being aimed by equipment installed on the vehicle must include a Vehicle Headlamp Aiming Device (VHAD) that conforms to the following requirements:

S10.18.8.1 ***Aim.*** The VHAD must provide for headlamp aim inspection and adjustment in both the vertical and horizontal axes.

S10.18.8.1.1 ***Vertical aim.*** The VHAD must include the necessary references and scales relative to the horizontal plane to assure correct vertical aim for photometry and aiming purposes. An off vehicle measurement of the angle of the plane of the ground is permitted. In addition, an equal number of graduations from the “0” position representing angular changes in the axis in the upward and downward directions must be provided.

S10.18.8.1.1.1 Each graduation must represent a change in the vertical position of the mechanical axis not larger than 0.19° (1 in at 25 ft) to provide for variations in aim at least 1.2° above and below the horizontal, and have an accuracy relative to the zero mark of less than 0.1°.

S10.18.8.1.1.2 The VHAD must be marked to indicate headlamp aim movement in the upward and downward directions.

S10.18.8.1.1.3 Each graduation must indicate a linear movement of the scale indicator of not less than 0.05 in (1.27 mm) if a direct reading analog indicator is used. If a remote reading indicator is provided, it must represent the actual aim movement in a clear, understandable format.

S10.18.8.1.1.4 The vertical indicator must perform through a minimum range of ±1.2°.

S10.18.8.1.1.5 Means must be provided in the VHAD for compensating for deviations in floor slope less than 1.2° from the horizontal that would affect the correct positioning of the headlamp for vertical aim.

S10.18.8.1.1.6 The graduations must be legible under an illumination level not greater than 30 foot candles, measured at the top of the graduation, by an observer having 20/20 vision (Snellen), and must permit aim adjustment to within 0.19° (1 in at 25 ft).

S10.18.8.1.2 ***Horizontal aim.*** The VHAD must include references and scales relative to the longitudinal axis of the vehicle necessary to assure correct horizontal aim for photometry and aiming purposes. A “0” mark must be used to indicate alignment of the headlamps relative to the longitudinal axis of the vehicle. In addition, an equal number of graduations from the “0” position representing equal angular changes in the axis relative to the vehicle axis must be provided. If the horizontal VHAD is part of an adaptive driving beam system, S10.18.8.1.2.1 through S10.18.8.1.2.4 are not required.

S10.18.8.1.2.1 Each graduation must represent a change in the horizontal position of the mechanical axis not greater than 0.38° (2 in at 25 ft) to provide for variations in aim at least 0.76° (4 in at 25 ft) to the left and right of the longitudinal axis of the vehicle, and must have an accuracy relative to the zero mark of less than 0.1°.

S10.18.8.1.2.2 The VHAD must be marked to indicate headlamp aim movement in the left and right directions.

S10.18.8.1.2.3 The graduations must be legible under an illumination level not greater than 30 foot candles, measured at the top of the graduation, by an observer having 20/20 vision (Snellen), and must permit aim adjustment to within 0.38° (2 in at 25 ft).

S10.18.8.1.2.4 The horizontal indicator must perform through a minimum range of ±0.76° (4 in at 25 ft); however, the indicator itself must be capable of recalibration over a movement of ±2.5° relative to the longitudinal axis of the vehicle to accommodate any adjustment necessary for recalibrating the indicator after vehicle repair from accident damage.

S10.18.8.2 ***Aiming instructions.***

S10.18.8.2.1 Instructions must be provided either on a label permanently affixed to the vehicle adjacent to the VHAD, or in the operator's manual, advising the vehicle owner what to do if the headlighting system requires aiming using the VHAD.

S10.18.8.2.2 Should a remote indicator or a remote indicator and adjuster be provided, the instructions must be placed in the operator's manual, and may also be placed on a label adjacent to the VHAD.

S10.18.8.3 ***Permanent calibration.*** Each headlamp equipped with a VHAD must be manufactured with its calibration permanently fixed by its manufacturer. Calibration in this case means the process of accurately aligning the geometry of the VHAD devices with the beam pattern for the purposes of compliance with the standard.

S10.18.8.4 ***Replacement units.*** When tested according to the procedure of S14.2.5 with any replacement headlamp unit(s) or light sources intended for use in the system under test, the VHAD and headlighting system must be designed to conform to the photometric performance requirements applicable for the system under test.

S10.18.8.5 ***Physical tests.*** Each VHAD must be designed to conform with the performance requirements of S14.8.

S10.18.9 ***Visual/optical aiming.*** Each visually/optically aimable headlamp must be designed to conform to the following requirements:

S10.18.9.1 ***Vertical aim, lower beam.*** Each lower beam headlamp must have a cutoff in the beam pattern. It may be either on the left side or the right side of the optical axis, but once chosen for a particular headlamp system's design, the side chosen for the cutoff must not be changed for any headlamps intended to be used as replacements for those system's headlamps.

S10.18.9.1.1 ***Vertical position of the cutoff.*** The headlamp must be aimed vertically so that the cutoff is on the left side, at 0.4° down from the H–H line, or on the right side, at the H–H line.

S10.18.9.1.2 ***Vertical gradient.*** The gradient of the cutoff measured at either 2.5° L or 2.0° R must be not less than 0.13 based on the procedure of S10.18.9.1.5.

S10.18.9.1.3 ***Horizontal position of the cutoff.*** The width must be not less than 2°, with not less than 2° of its actual width centered at either 2.5° L, or 2.0° R.

S10.18.9.1.4 ***Maximum inclination of the cutoff.*** The vertical location of the highest gradient at the ends of the minimum width must be within ±0.2° of the vertical location of the maximum gradient measured at the appropriate vertical line (at either 2.5° L for a left side cutoff, or 2.0° R for a right side cutoff).

S10.18.9.1.5 ***Measuring the cutoff parameter.***

S10.18.9.1.5.1 The headlamp is mounted on a headlamp test fixture which simulates its actual design location on any vehicle for which the headlamp is intended. The fixture, with the headlamp installed, is attached to the goniometer table in such a way that the fixture alignment axes are coincident with the goniometer axes. The headlamp is energized at the specified test voltage. The cutoff parameter must be measured at a distance of 10 m from a photosensor with a 10 mm diameter.

S10.18.9.1.5.2 The headlamp beam pattern is aimed with the cutoff at the H–H axis. There is no adjustment, shimming, or modification of the horizontal axis of the headlamp or test fixture, unless the headlamp is equipped with a VHAD. In this case the VHAD is adjusted to zero.

S10.18.9.1.5.3 A vertical scan of the beam pattern is conducted for a headlamp with a left side gradient by aligning the goniometer on a vertical line at 2.5° L and scanning from 1.5° U to 1.5° D. For a headlamp with a right side gradient, a vertical scan of the beam pattern is conducted by aligning the goniometer on a vertical line at 2.0° R and scanning from 1.5° U to 1.5° D.

S10.18.9.1.5.4 Determine the maximum gradient within the range of the scan by using the formula: G = log E(a)−logE(a + 0.1), where “G” is the gradient, “E” is illumination and “a” is vertical angular position. The maximum value of the gradient “G” determines the vertical angular location of the cutoff. Perform vertical scans at 1.0° L and R of the measurement point of the maximum gradient to determine the inclination.

S10.18.9.2 ***Horizontal aim, lower beam.*** There is no adjustment of horizontal aim unless the headlamp is equipped with a horizontal VHAD. If the headlamp has a VHAD, it is set to zero.

S10.18.9.3 ***Vertical aim, upper beam.***

S10.18.9.3.1 If the upper beam is combined in a headlamp with a lower beam, the vertical aim of the upper beam must not be changed from the aim set using the procedures of S10.18.9.1 and S10.18.9.2 used for the lower beam.

S10.18.9.3.2 If the upper beam is not combined in a headlamp with a lower beam, the vertical aim of the upper beam is adjusted so that the maximum beam intensity is located on the H–H axis.

S10.18.9.4 ***Horizontal aim, upper beam.***

S10.18.9.4.1 If the upper beam is combined in a headlamp with a lower beam, the horizontal aim of the upper beam must not be changed from the aim set using the procedures of S10.18.9.1 and S10.18.9.2 used for the lower beam.

S10.18.9.4.2 If the upper beam is not combined in a headlamp with the lower beam and has fixed horizontal aim or has a horizontal VHAD, then the headlamp is mounted on a headlamp test fixture which simulates its actual design location on any vehicle for which the headlamp is intended. The fixture, with the headlamp installed, is attached to the goniometer table in such a way that the fixture alignment axes are coincident with the goniometer axes. The headlamp must be energized at 12.8 ±0.20 mV. There is no adjustment, shimming, or modification of the horizontal axis of the headlamp or test fixture, unless the headlamp is equipped with a VHAD. In this case the VHAD is adjusted to zero.

S10.18.9.4.3 If the upper beam is not combined in a headlamp with a lower beam, and it does not have a VHAD, the horizontal aim of the upper beam is adjusted so that the maximum beam intensity is located on the V–V axis.

S10.18.9.5 ***Photometry.*** When tested according to the procedure of S14.2.5, a visually/optically aimable headlamp must be designed to conform to the lower beam requirements of columns; LB1V or LB2V of Table XIX–a, or LB3V of Table XIX–b, or LB4V of Table XIX–c.

S10.18.9.6 ***Visual/optical aiming identification marking.*** Each letter used in marking according to this paragraph must be not less than 3 mm high.

S10.18.9.6.1 The lens of a lower beam headlamp must be marked “VOL” if the headlamp is intended to be visually/optically aimed using the left side of the lower beam pattern. The lens of a lower beam headlamp must be marked “VOR” if the headlamp is

intended to be visually/optically aimed using the right side of the lower beam pattern. The lens of a headlamp that is solely an upper beam headlamp and intended to be visually/optically aimed using the upper beam must be marked “VO”.

S10.18.9.6.2 The lens of each sealed beam or integral beam headlamp must be marked “VOR” if the headlamp is of a type that was manufactured before May 1, 1997, and if such headlamp type has been redesigned since then to be visually/optically aimable.

S11 ***Replaceable light source requirements.*** Each replaceable light source must be designed to conform to the dimensions and electrical specifications furnished with respect to it pursuant to part 564 of this chapter, on file in Docket No. NHTSA 98–3397, and must conform to the following requirements:

S11.1 ***Markings.*** If other than an HB Type, the light source must be marked with the bulb marking designation specified for it in compliance with appendix A or appendix B of part 564 of this chapter. The base of each HB Type must be marked with its HB Type designation. Each replaceable light source must also be marked with the symbol DOT and with a name or trademark in accordance with S6.5.

S11.2 ***Ballast markings.*** If a ballast is required for operation, each ballast must bear the following permanent markings:

(a) Name or logo of ballast manufacturer;

(b) Ballast part number or unique identification;

(c) Part number or other unique identification of the light source for which the ballast is designed;

(d) Rated laboratory life of the light source/ballast combination, if the information for the light source has been filed in appendix B of part 564 of this chapter;

(e) A warning that ballast output voltage presents the potential for severe electrical shock that could lead to permanent injury or death;

(f) Ballast output power in watts and output voltage in rms volts AC or DC; and

(g) The symbol ‘DOT’.

S11.3 ***Gas discharge laboratory life.*** For light sources that use excited gas mixtures as a filament or discharge arc, the “rated laboratory life” is determined in accordance with sections 4.3 and 4.9 of SAE Recommended Practice J2009 FEB93, Forward Discharge Lighting Systems (incorporated by reference, see 571.108 S5.2 of this title).

S11.4 ***Physical tests.***

S11.4.1 Each replaceable light source must be designed to conform with the performance requirements of the deflection test and pressure test requirements of S14.7.

S11.4.2 Replaceable light sources must be designed to conform with the requirements of section VII of appendix A of part 564 of this chapter, or section IV of appendix B of part 564 of this chapter, for maximum power and luminous flux when test by the procedure of S14.7.3.

S12 ***Headlamp concealment device requirements.***

S12.1 While the headlamp is illuminated, its fully opened headlamp concealment device must remain fully opened should any loss of power to or within the headlamp concealment device occur.

S12.2 Whenever any malfunction occurs in a component that controls or conducts power for the actuation of the concealment device, each closed headlamp concealment device must be capable of being fully opened by a means not requiring the use of any tools. Thereafter, the headlamp concealment device must remain fully opened until intentionally closed.

S12.3 Except for malfunctions covered by S12.2, each headlamp concealment device must be capable of being fully opened and the headlamps illuminated by actuation of a single switch, lever, or similar mechanism, including a mechanism that is automatically actuated by a change in ambient light conditions.

S12.4 Each headlamp concealment device must be installed so that the headlamp may be mounted, aimed, and adjusted without removing any component of the device, other than components of the headlamp assembly.

S12.5 Except for cases of malfunction covered by S12.2, each headlamp concealment device must, within an ambient temperature range of −20 °F to + 120 °F, be capable of being fully opened in not more than 3 seconds after the actuation of a driver-operated control.

S12.6 As an alternative to complying with the requirements of S12.1 through S12.5, a vehicle with headlamps incorporating VHAD or visual/optical aiming in accordance with this standard may meet the requirements for *Concealable lamps* in paragraph 5.14 of UNECE Regulation 48 page 17 (incorporated by reference, see § 571.5), in the English language version.

S12.7 ***Certification election.*** Manufacturers of vehicles with headlamps incorporating VHAD or visual/optical aiming must elect to certify to S12.1 through S12.5 or to S12.6 prior to, or at the time of certification of the vehicle, pursuant to 49 CFR Part 567. The selection is irrevocable.

S13 ***Replaceable headlamp lens requirements.***

S13.1 A replacement lens for a replaceable bulb headlamp or integral beam headlamp that is not required to have a bonded lens must be provided with a replacement seal in a package that includes instructions for the removal and replacement of the lens, the cleaning of the reflector, and the sealing of the replacement lens to the reflector assembly.

S13.2 Each replacement headlamp lens with seal, when installed according to the lens manufacturer's instructions on an integral beam or replaceable bulb headlamp, must not cause the headlamp to fail to comply with any of the requirements of this standard.

S14 ***Physical and photometry test procedures and performance requirements.***

S14.1 ***General test procedures and performance requirements.***

S14.1.1 Each lamp, reflective device, item of conspicuity treatment, and item of associated equipment required or permitted by this standard must be designed to conform to all applicable physical test performance requirements specified for it.

S14.1.2 ***Plastic optical materials.*** All plastic materials used for optical parts such as lenses and reflectors on lamps or reflective devices required or allowed by this standard must conform to the material test requirements of S14.4.2.

S14.1.3 All coatings used on optical materials must have added to their formulations an optical brightener, whose presence is detectable by ultraviolet light, to aid in testing for their presence. Other equivalent industry accepted methods may be used as an alternative.

S14.1.4 ***Samples.***

S14.1.4.1 Samples submitted for laboratory test must be new, unused, manufactured from production tooling and assembled by production processes, and representative of the devices as regularly manufactured and marketed.

S14.1.4.2 Each test sample must include not only the device but also accessory equipment necessary to operate in its intended manner. Where necessary a mounting bracket shall be provided so that the device may be rigidly bolted in its operating position on the various test equipment.

S14.1.4.3 Dust and photometric tests may be made on a second set of mounted samples, if desired, to expedite completion of the tests.

S14.1.5 ***Laboratory facilities.*** The laboratory must be equipped to test the sample in accordance with the requirements of the specific device.

S14.2 ***Photometric test procedures.*** Each lamp and reflective device required or permitted by this standard must be designed to conform to the applicable photometric requirements.

S14.2.1 ***Photometry measurements for all lamps except license plate lamps, headlamps, and DRLs.***

S14.2.1.1 ***Mounting.*** Photometry measurements are made with the sample lamp mounted in its normal operating position.

S14.2.1.2 ***School bus signal lamp aiming.*** A school bus signal lamp must be aimed with its aiming plane normal to the photometer axis and may be reaimed for photometry by ± $^{1}/_{2}$° vertically and ±1° horizontally.

S14.2.1.3 ***Measurement distance.*** Photometric measurements are made at a distance between the light source and the point of measurement of at least 1.2 m for side marker lamps, clearance lamps, identification lamps, and parking lamps, and at least 3 m for turn signal lamps, stop lamps, taillamps, backup lamps, and school bus signal lamps.

S14.2.1.4 ***Location of test points.*** Test point location must comply with the following nomenclature:

(a) The line formed by the intersection of a vertical plane through the light source of the lamp and normal to the test screen is designated “V”.

(b) The line formed by the intersection of a horizontal plane through the light source and normal to the test screen is designated “H”.

(c) The point of intersection of these two lines is designated “H-V”.

(d) Other test points on the test screen are measured in terms of angles from the H and V lines.

(e) Angles to the right (R) and to the left (L) are regarded as being to the right and left of the V line when the observer stands behind the lamp and looks in the direction of its light beam when it is properly aimed for photometry. Similarly, the upward angles designated as U and the downward angles designated as D, refer to light directed at angles above and below the H line, respectively.

S14.2.1.5 ***Multiple compartment and multiple lamp photometry of turn signal lamps, stop lamps, and taillamps.***

S14.2.1.5.1 When compartments of lamps or arrangements of multiple lamps are photometered together, the H–V axis intersects the midpoint between the optical axes.

S14.2.1.5.2 Luminous intensity measurements of multiple compartment lamps or multiple lamp arrangements are made either by:

(a) Measuring all compartments together, provided that a line from the optical axis of each compartment or lamp to the center of the photometer sensing device does not make an angle more than 0.6° with the H–V axis, or

(b) Measuring each compartment or lamp separately by aligning its optical axis with the photometer and adding the value at each test point.

S14.2.1.5.3 Multiple compartment turn signal lamps or stop lamps or multiple lamp arrangements of these lamps installed on multipurpose passenger vehicles, trucks, trailers, or buses 2032 mm or more in overall width must use the method of S14.2.1.5.2(b) only.

S14.2.1.6 ***Bulbs.*** Except for a lamp having a sealed-in bulb, a lamp must meet the applicable requirements of this standard when tested with a bulb whose filament is positioned within ±.010 in of the nominal design position specified in SAE Recommended Practice J573d (1968) (incorporated by reference, see § 571.5) or specified by the bulb manufacturer and operated at the bulb's rated mean spherical candela.

S14.2.1.6.1 Each lamp designed to use a type of bulb that has not been assigned a mean spherical candela rating by its manufacturer and is not listed in SAE Recommended Practice J573d (1968) (incorporated by reference, see § 571.5), must meet the applicable requirements of this standard when used with any bulb of the type specified by the lamp manufacturer, operated at the bulb's design voltage. A lamp that contains a sealed-in bulb must meet these requirements with the bulb operated at the bulb's design voltage.

S14.2.1.6.2 A bulb that is not listed in SAE Recommended Practice J573d (1968) (incorporated by reference, see § 571.5) is not required to use a socket that conforms to the requirements of SAE Recommended Practice J567b (1964) (incorporated by reference, see § 571.5).

S14.2.2 ***License plate lamp photometry.*** Photometry compliance of license plate lamps is determined by measurement of the illumination falling upon test stations located on a test plate.

S14.2.2.1 ***Illumination surface.*** All illumination measurements are made on a rectangular test plate of clean, white blotting paper mounted on the license plate holder in the position normally taken by the license plate. The face of the test plate must be 1.5 mm from the face of the license plate holder.

S14.2.2.2 ***Test stations.*** Test stations must be located on the face of the test plate as shown in Figure 19 according to the type of vehicle on which the license plate lamps are installed.

S14.2.2.3 Bulb requirements of S14.2.1.6 apply to license plate lamp photometry.

S14.2.3 ***Reflex reflector and retroreflective sheeting photometry.***

S14.2.3.1 ***Mounting.*** Each reflex reflector is mounted for photometry with the center of the reflex area at the center of goniometer rotation and at the same horizontal level as the source of illumination.

S14.2.3.2 ***Illumination source.*** The source of illumination is a lamp with a 50 mm effective diameter and with a filament operating at 2856 °K.

S14.2.3.3 ***Measurement distance.*** The test distance is 30.5 m [100ft].

S14.2.3.4 ***Test setup*** The observation point is located directly above the source of illumination. The H–V axis of reflex reflectors is taken as parallel to the longitudinal axis of the vehicle for rear reflectors and perpendicular to a vertical plane passing through the longitudinal axis of the vehicle for side reflectors.

S14.2.3.5 ***Photodetector.*** The photodetector has an opening of not more than 13 mm vertically and 25 mm horizontally.

S14.2.3.6 ***Photometry surface.*** Reflex reflectors may have any linear or area dimensions but must have no more than 7740 sq mm projected area contained within a 254 mm diameter circle exposed for photometry.

S14.2.3.7 ***Procedure.*** Photometric measurements of reflex reflectors and retroreflective sheeting must be made at various observation and entrance angles as shown in Table XVI.

S14.2.3.7.1 The observation angle is the angle formed by a line from the observation point to the center of the reflector and a second line from the center of the reflector to the source of illumination.

S14.2.3.7.2 The entrance angle is the angle between the axis of the reflex reflector and a line from the center of the reflector to the source of illumination.

S14.2.3.7.3 The entrance angle is designated left, right, up, and down in accordance with the position of the source of illumination with respect to the axis of the reflex reflector as viewed from behind the reflector.

S14.2.3.7.4 Measurements are made of the luminous intensity which the reflex reflector is projecting toward the observation point and the illumination on the reflex reflector from the source of illumination.

S14.2.3.8 ***Measurements.***

S14.2.3.8.1 ***Reflex reflectors.*** The required measurement for reflex reflectors at each test point as shown in Table XVI is the quotient of the projected luminous intensity divided by the illumination expressed as millicandela per lux or candela per footcandle.

S14.2.3.8.2 ***Retroreflective sheeting.*** The required measurement for retroreflective sheeting reflectors at each test point as shown in Table XVI is candela per lux per square meter of area.

S14.2.3.8.3 ***Reflex reflector photometry measurement adjustments.***

S14.2.3.8.3.1 Reflex reflectors, which do not have a fixed rotational position on the vehicle, are rotated about their axis through 360° to find the minimum photometric value which must be reported for each test point. If the output falls below the minimum requirement at any test point, the reflector is rotated ±5° about its axis from the angle where the minimum output occurred, and the maximum value within this angle is reported as a tolerance value.

S14.2.3.8.3.2 Reflex reflectors, which by their design or construction, permit mounting on a vehicle in a fixed rotational position, are tested in this position. A visual locator, such as the word TOP is not considered adequate to establish a fixed rotational position on the vehicle.

S14.2.3.8.3.3 If uncolored reflections from the front surface interfere with photometric readings at any test point, additional readings are taken 1° above, below, right, and left of the test point, and the lowest of these readings and its location is reported provided the minimum test point requirement for the test point is met.

S14.2.4 ***Daytime running lamp (DRL) photometry measurements.***

S14.2.4.1 Each DRL is tested to the procedure of S14.2.5 when a test voltage of 12.8 v ±20 mv is applied to the input terminals of the lamp switch module or voltage-reducing equipment, whichever is closer to the electrical source on the vehicle.

S14.2.4.2 The test distance from the lamp to the photometer is not less than 18.3 m if the lamp is optically combined with a headlamp, or is a separate lamp, and not less than 3 m if the lamp is optically combined with a lamp, other than a headlamp, that is required by this standard.

S14.2.4.3 Except for a lamp having a sealed-in bulb, a lamp must meet the applicable requirements of this standard when tested with a bulb whose filament is positioned within ±.010 in. of the nominal design position specified in SAE J573d, Lamp bulbs and Sealed Units, December 1968, (incorporated by reference, paragraph S5.2 of this section) or specified by the bulb manufacturer.

S14.2.5 ***Headlamp photometry measurements.***

S14.2.5.1 ***Mounting.*** Photometry measurements at the applicable test points are made with the sample headlamp mounted in its normal operating position.

S14.2.5.2 Test points in the area from 10° U to 90° U must be measured from the normally exposed surface of the lens face.

S14.2.5.3 ***Measurement distance.*** Photometric measurements are made at a distance between the light source and the photometer sensor of at least 18.3 m.

S14.2.5.4 ***Seasoning and test voltage.*** All sealed beam headlamps, integral beam headlamps, beam contributors, and replaceable light sources are seasoned at design voltage for 1% of its average design life or 10 hours, whichever is less prior to a photometry test. A headlamp is tested at 12.8 v. ±20 mv, D.C. as measured at the terminals of the lamp.

S14.2.5.5 ***Aiming.*** Each headlamp is aimed prior to a photometry test in accordance with the procedure appropriate to its aiming system. A $^{1}/_{4}$° reaim is permitted in any direction at any test point to allow for variations in readings between laboratories for all headlamps except a Type F upper beam unit not equipped with a VHAD.

S14.2.5.5.1 ***Mechanically aimable headlamps using an external aimer.*** The headlamp is aimed mechanically with the aiming plane at the design angle(s) to the photometer axis and the mechanical axis of the headlamp on the photometer axis.

S14.2.5.5.2 ***Mechanically aimable headlamps equipped with a VHAD.*** The headlamp is aimed mechanically using the VHAD in accordance with the manufacturer's instructions as provided with the vehicle on which the headlamp is intended to be used.

S14.2.5.5.3 ***Visually aimable lower beam headlamps-vertical aim.***

S14.2.5.5.3.1 A VOL cutoff headlamp must have the location of the cutoff maximum gradient, as determined by the method of this standard, positioned at 0.4° down from the H–H line.

S14.2.5.5.3.2 A VOR cutoff headlamp must have the location of the cutoff maximum gradient, as determined by the method of this standard, positioned at the H–H line.

S14.2.5.5.4 ***Visually aimable lower beam headlamps-horizontal aim.*** There must be no adjustment of horizontal aim unless the headlamp is equipped with a horizontal VHAD. If the headlamp has a VHAD, it must be set to zero.

S14.2.5.5.5 ***Visually aimable upper beam headlamps-vertical aim.***

S14.2.5.5.5.1 A headlamp whose upper beam is combined with a lower beam must not have its vertical aim changed from that set for the lower beam.

S14.2.5.5.5.2 A headlamp whose upper beam is not combined with a lower beam must have its maximum beam intensity positioned on the H–H axis.

S14.2.5.5.6 ***Visually aimable upper beam headlamps-horizontal aim.***

S14.2.5.5.6.1 A headlamp whose upper beam is combined with a lower beam must not have its horizontal aim changed from that set for the lower beam.

S14.2.5.5.6.2 A headlamp whose upper beam is not combined with a lower beam and has a fixed horizontal aim or has a horizontal VHAD must be mounted in its normal operating position on a goniometer such that the mounting fixture alignment axes are coincident with the goniometer axes and must be energized at 12.8 v ±20 mv. There must be no adjustment, shimming, or modification of the horizontal axis of the headlamp or test fixture, unless the headlamp is equipped with a VHAD, in which case the VHAD must be adjusted to zero.

S14.2.5.5.6.3 A headlamp whose upper beam is not combined with a lower beam and is not equipped with a horizontal VHAD, the horizontal aim must be adjusted so that the maximum beam intensity is positioned on the V–V axis.

S14.2.5.5.7 ***Simultaneous aim Type F sealed beam headlamps and beam contributor integral beam headlamps.***

S14.2.5.5.7.1 A headlamp system permitted to use simultaneous aim of lower beams and upper beams must be aimed mechanically for lower beam photometry by centering the lower beam unit or the geometric center of all lower beam contributors on the photometer axis and aligning the aiming plane, aiming reference plane, or other appropriate vertical plane defined by the manufacturer perpendicular to the photometer axis.

S14.2.5.5.7.2 The headlamp must be aimed for upper beam photometry by moving the assembly in a plane parallel to the established lower beam aiming plane until the upper beam unit or the geometric center of all upper beam contributors is centered in the photometric axis.

S14.2.5.5.8 ***Motorcycle headlamp-upper beam headlamps designed to comply with Table XX.*** The upper beam of a multiple beam headlamp designed to comply with the requirements of Table XX must be aimed photoelectrically so that the center of the zone of highest intensity falls 0.4° vertically below the lamp axis and is centered laterally. The center of the zone of highest intensity must be established by the intersection of a horizontal plane passing through the point of maximum intensity, and the vertical plane established by balancing the photometric values at 3°L and 3°R.

S14.2.5.5.9 ***Motorcycle headlamp-lower beam headlamps designed to comply with Table XX.*** The beam from a single beam headlamp designed to comply with the requirements of Table XX must be aimed straight ahead with the top of the beam aimed vertically to obtain 2000 cd at H–V.

S14.2.5.6 ***Positioner.*** The goniometer configuration, used to position the sample headlamp when making photometric measurements at specific angular test points, is horizontal rotation over elevation. The vertical axis of the goniometer must correspond to the design position vertical axis of the sample headlamp which is vertical and perpendicular to the longitudinal axis of the vehicle.

S14.2.5.7 ***Photometer.***

S14.2.5.7.1 The photometer must be capable of measuring the luminous intensity of the sample headlamp throughout its illumination range.

S14.2.5.7.2 ***Sensor.***

S14.2.5.7.2.1 The maximum effective area of the photometric sensor must fit within a circle whose diameter is equal to 0.009 times the actual test distance from the light source of the sample headlamp to the sensor.

S14.2.5.7.2.2 The sensor effective area is defined as the actual area of intercepted light striking the detector surface of the photometer. Sensor systems incorporating lens(es) that change the diameter of the intercepted light beam before it reaches the actual detector surface, the maximum size requirements must apply to the total area of the light actually intercepted by the lens surface.

S14.2.5.7.2.3 The sensor must be capable of intercepting all direct illumination from the largest illuminated dimension of the sample lamp at the test distance.

S14.2.5.7.3 The color response of the photometer must be corrected to that of the 1931 CIE Standard Observer (2-degree) Photopic Response Curve, as shown in the CIE 1931 Chromaticity Diagram (incorporated by reference, see § 571.5).

S14.2.5.8 ***Location of test points.***

S14.2.5.8.1 Test point positions are defined by the positioner. The following nomenclature applies:

S14.2.5.8.1.1 The letters “V” and “H” designate the vertical and horizontal planes intersecting both the headlamp light source and the photometer axis. “H–V” designates the zero test point angle at the intersection of the H and V planes. This intersection is parallel to the longitudinal axis of the vehicle.

S14.2.5.8.1.2 The letters “U”, “D”, “L”, and “R”, indicating up, down, left and right, respectively, designate the angular position from the H and V planes to the photometer as viewed from the headlamp.

S14.2.5.8.1.3 Horizontal angles designated L and R are defined as the plan view angle between the vertical plane and the projection of the light ray from the headlamp onto the horizontal plane.

S14.2.5.8.1.4 Vertical angles designated U and D are defined as the true angle between the horizontal plane and the light ray from the headlamp.

S14.2.5.9 ***Beam contributor photometry measurements.*** In a headlighting system where there is more than one beam contributor providing a lower beam, and/or more than one beam contributor providing an upper beam, each beam contributor must be designed to meet only the applicable photometric performance requirements based upon the following mathematical expression: conforming test point value = 2(test point value)/total number of lower or upper beam contributors for the vehicle, as appropriate.

S14.2.5.10 ***Moveable reflector aimed headlamp photometry measurements.***

S14.2.5.10.1 A headlamp aimed by moving the reflector relative to the lens and headlamp housing, or vice versa, must conform to the photometry requirements applicable to it with the lens at any position relative to the reflector.

S14.2.5.10.2 These positions include not less than the full range of vertical pitch of the vehicle on which the headlamp is installed and not less than ±2.5° from the nominal horizontal aim position for the vehicle on which the headlamp is installed unless the headlamp is visually/optically aimed with a fixed horizontal aim.

S14.3 ***Motorcycle headlamp out of focus test procedure and performance requirements.***

S14.3.1 ***Procedure.*** The sample device must be tested for photometry using bulbs having each of four out-of-focus filament positions. Where conventional bulbs with two pin bayonet bases are used, tests must be made with the light source 0.060 in. above, below, ahead, and behind the designated position. If prefocused bulbs are used, the limiting positions at which tests are made must be 0.020 in. above, below, ahead, and behind the designated position. The sample device may be reaimed for each of the out-of-focus positions of the light source.

S14.3.2 ***Performance requirements.*** The minimum photometric values for the out-of-design position must be 80% of the in-design position.

S14.4 ***General test procedures and performance requirements.***

S14.4.1 ***Color test.*** The requirement applies to the overall effective color of light emitted by the device and not to the color of the light from a small area of the lens. It does not apply to any pilot, indicator, or tell-tale lights. The color of the sample device must comply when tested by either the Visual Method or the Tristimulus Method.

S14.4.1.1 ***Samples.*** A test sample for a reflex reflector may be either the reflex reflector or a disc of the same material, technique of fabrication, and dye formulation as the reflex reflector. If a disc is used, the thickness must be twice the thickness of the reflector as measured from the face of the lens to the apexes of the reflecting elements.

S14.4.1.2 ***General procedure.***

S14.4.1.2.1 The device must be operated at design voltage.

S14.4.1.2.2 Components (bulbs, caps, lenses, and the like) must be tested in a fixture or manner simulating the intended application.

S14.4.1.2.3 The lamp shall be allowed to reach operating temperature before measurements are made.

S14.4.1.2.4 The entire light emitting surface of the sample must be visible from any point on the entrance window of the test instrument.

S14.4.1.2.5 The distance between the test instrument and the sample must be large enough so that further increases in distance will not affect the results.

S14.4.1.3 ***Visual method.***

S14.4.1.3.1 ***Visual method procedure.*** The color of light from the sample device must be compared visually with the color of the light from a standard. The standard may consist of a filter or limit glass. In the case of white, CIE Source A is used only as a color reference. The chromaticity coordinates of the color standards must be as close as possible to the limits listed. The color of the standard filters is determined spectro-photometrically.

S14.4.1.3.2 ***Visual method performance requirements.*** The color must comply with the applicable requirement.

S14.4.1.3.2.1 ***Red.*** Red is not acceptable if it is less saturated (paler), yellower, or bluer than the limit standards.

S14.4.1.3.2.2 ***Yellow (Amber).*** Yellow is not acceptable if it is less saturated (paler), greener, or redder than the limit standards.

S14.4.1.3.2.3 ***White.*** White is not acceptable if its color differs materially from that of CIE Source A.

S14.4.1.3.2.4 Green. Green is not acceptable if it is less saturated (paler), yellower, or bluer than the limit standards.

S14.4.1.3.2.5 Blue. Blue is not acceptable if it is less saturated (paler), greener, or redder than the limit standards.

S14.4.1.4 ***Tristimulus method.***

S14.4.1.4.1 ***Tristimulus method procedure.***

S14.4.1.4.1.1 The color of light from the H–V point of a sample device must be measured by photoelectric receivers with spectral responses that approximate CIE standard spectral tristimulus valves.

S14.4.1.4.1.2 A sphere may be used to integrate light from a colored source provided that the color shift that results from the spectral selectivity of the sphere paint be corrected by the use of a filter, correction factor, or an appropriate calibration.

S14.4.1.4.1.3 Where the sample device does not have uniform spectral characteristics in all useful directions, color measurements must be made at as many directions of view as are required to evaluate the color for those directions that apply to the end use of the device.

S14.4.1.4.2 ***Tristimulus method performance requirements.*** The color must comply with the applicable requirement.

S14.4.1.4.2.1 ***Red.*** The color of light emitted must fall within the following boundaries:

y = 0.33 (yellow boundary)

y = 0.98 − x (purple boundary)

S14.4.1.4.2.2 ***Yellow (Amber).*** The color of light emitted must fall within the following boundaries:

y = 0.39 (red boundary)

y = 0.79 − 0.67x (white boundary)

y = x − 0.12 (green boundary)

S14.4.1.4.2.3 ***White (achromatic).*** The color of light emitted must fall within the following boundaries:

x = 0.31 (blue boundary)

y = 0.44 (green boundary)

x = 0.50 (yellow boundary)

y = 0.15 + 0.64x (green boundary)

y = 0.38 (red boundary)

y = 0.05 + 0.75x (purple boundary)

S14.4.1.4.2.4 Green. The color of light emitted must fall within the following boundaries:

y = 0.73 − 0.73x (yellow boundary)

x = 0.63y − 0.04 (white boundary)

y = 0.50 − 0.50x (blue boundary)

S14.4.1.4.2.5 Restricted Blue. The color of light emitted must fall within the following boundaries:

y = 0.07 + 0.81x (green boundary)

x = 0.40 − y (white boundary)

x = 0.13 + 0.60y (violet boundary)

S14.4.1.4.2.6 Signal Blue. The color of light emitted must fall within the following boundaries:

y = 0.32 (green boundary)

x = 0.16 (white boundary)

x = 0.40 − y (white boundary)

x = 0.13 + 0.60y (violet boundary)

S14.4.2 ***Plastic optical materials tests.*** Accelerated weathering procedures are not permitted.

S14.4.2.1 ***Samples.***

S14.4.2.1.1 Samples of materials shall be injection molded into polished metal molds to produce test specimens with two flat and parallel faces. Alternative techniques may be used to produce equivalent specimens.

S14.4.2.1.2 Test specimens shape may vary, but each exposed surface must contain a minimum uninterrupted area of 32 sq cm.

S14.4.2.1.3 Samples must be furnished in thicknesses of 1.6 ±0.25 mm, 2.3 ±0.25 mm, 3.2 ±0.25 mm, and 6.4 ±0.25 mm.

S14.4.2.1.4 All samples must conform to the applicable color test requirement of this standard prior to testing.

S14.4.2.1.5 A control sample, kept properly protected from influences which may change its appearance and properties of each thickness, must be retained.

S14.4.2.2 ***Outdoor exposure test.***

S14.4.2.2.1 Outdoor exposure tests of 3 years in duration must be made on samples of all materials, including coated and uncoated versions, used for optical parts of devices covered by this standard. Tests are to be conducted in Florida and Arizona.

S14.4.2.2.2 Concentrations of polymer components and additives used in plastic materials may be changed without outdoor exposure testing provided the changes are within the limits of composition represented by higher and lower concentrations of these polymer components and additives previously tested to this section and found to meet its requirements.

S14.4.2.2.3 ***Procedure.***

S14.4.2.2.3.1 One sample of each thickness of each material must be mounted at each exposure site so that at least a minimum uninterrupted area of 32 sq cm of the exposed upper surface of the sample is at an angle of 45° to the horizontal facing south. The sample must be mounted in the open no closer than 30 cm (11.8 in) to its background.

S14.4.2.2.3.2 During the exposure time the samples must be cleaned once every three months by washing with mild soap or detergent and water, and then rinsing with distilled water. Rubbing must be avoided.

S14.4.2.2.4 ***Performance requirements.*** Plastic lenses, other than those incorporating reflex reflectors, used for inner lenses or those covered by another material and not exposed directly to sunlight must meet the optical material test requirements when covered by the outer lens or other material.

S14.4.2.2.4.1 After completion of the outdoor exposure test the haze and loss of surface luster as measured by ASTM D1003–92 (incorporated by reference, see § 571.5) must not be greater than:

(a) 30% for materials used for outer lenses, other than those incorporating reflex reflectors;

(b) 7% for materials used for reflex reflectors and lenses used in front of reflex reflectors.

S14.4.2.2.4.2 After completion of the outdoor exposure test materials used for headlamp lenses must show no deterioration.

S14.4.2.2.4.3 After completion of the outdoor exposure test all materials, when compared with the unexposed control samples, must not show physical changes affecting performance such as color bleeding, delamination, crazing, or cracking. Additionally materials used for reflex reflectors and lenses used in front of reflex reflectors must not show surface deterioration or dimensional changes.

S14.4.2.2.4.4 After completion of the outdoor exposure test all materials, when compared with the unexposed control samples, must not have their luminous transmittance changed by more than 25% when tested in accordance with ASTM E308–66 (incorporated by reference, see § 571.5) using CIE Illuminant A (2856K).

S14.4.2.2.4.5 After completion of the outdoor exposure test all materials must conform to the color test of this standard in the range of thickness stated by the material manufacturer.

S14.4.2.3 ***Heat test.***

S14.4.2.3.1 ***Procedure.*** Two samples of each thickness of each material must be supported at the bottom, with at least 51 mm of the sample above the support, in the vertical position in such a manner that, on each side, the minimum uninterrupted area of exposed surface is not less than 3225 sq mm. The samples are placed in a circulating air oven at 79 ±3 °C for two hours.

S14.4.2.3.2 ***Performance requirements.*** After completion of the heat exposure and cooling to room ambient temperature, a test specimen must show no change in shape and general appearance discernable to the naked eye when compared with an unexposed specimen and continue to conform to the applicable color test requirement of this standard.

S14.5 ***Signal lamp and reflective device physical test procedures and performance requirements.***

S14.5.1 ***Vibration test.***

S14.5.1.1 ***Procedure.*** The sample device, as mounted on the support supplied, must be bolted to the anvil end of the table of the vibration test machine of Figure 21 and vibrated approximately 750 cpm through a distance of $^{1}/_{8}$ in. The table must be spring mounted at one end and fitted with steel calks on the underside of the other end. The calks are to make contact with the steel anvil once during each cycle at the completion of the fall. The rack must be operated under a spring tension of 60 to 70 lb. The test must be continued for 1 hour.

S14.5.1.2 ***Performance requirements.*** After completion of the vibration test a device showing evidence of material physical weakness, lens or reflector rotation, displacement or rupture of parts except bulb failures, must be considered to have failed, providing that the rotation of lens or reflector must not be considered as a failure when tests show compliance with specifications despite such rotation.

S14.5.2 ***Moisture test.***

S14.5.2.1 ***Procedure.*** The sample device must be mounted in its normal operating position with all drain holes open and subjected to a precipitation of 0.1 in of water per minute, delivered at an angle of 45° from a nozzle with a solid cone spray. During the test the device must revolve about its vertical axis at a rate of 4 rpm for a period of 12 hours followed by a one hour drain period where the device does not rotate and the spray stops. After completion of the moisture test the device must be examined for moisture accumulation.

S14.5.2.2 ***Performance requirements.*** Accumulation of moisture in excess of 2 cc or any visible moisture in a sealed reflex unit must constitute a failure.

S14.5.3 ***Dust test.***

S14.5.3.1 ***Samples.*** A sealed unit is not required to meet the requirements of this test.

S14.5.3.2 ***Procedure.*** The sample device with any drain hole closed must be mounted in its normal operating position, at least 6 in from the wall in a cubical box with inside measurements of 3 ft on each side containing 10 lb of fine powered cement in accordance with ASTM C150–56 (incorporated by reference, see § 571.5). At intervals of 15 minutes

during a test period of 5 hours, the dust must be agitated by compressed air or fan blower by projecting blasts of air for a 2 second period in a downward direction into the dust in such a way that the dust is completely and uniformly diffused throughout the entire cube and allowed to settle. After the completion of the dust test the exterior surface of the device must be cleaned.

S14.5.3.3 ***Performance requirements.*** If after a photometry test the maximum photometric intensity of the device is not more than 10% less than the maximum photometric intensity of the same device after being cleaned both inside and outside, the device is considered to have met the requirements of the dust test.

S14.5.4 ***Corrosion test.***

S14.5.4.1 ***Procedure.*** The sample device must be subjected to a salt spray (fog) test in accordance with the latest version of ASTM B117–73 (Reapproved 1979) (incorporated by reference, see § 571.5), for a period of 50 hours, consisting of two periods of 24 hour exposure followed by a 1 hr drying time.

S14.5.4.2 ***Performance requirements.*** After the completion of the corrosion test there must be no evidence of excessive corrosion which would affect the proper function of the device.

S14.6 ***Headlamp physical test procedures and performance requirements.***

S14.6.1 ***Abrasion test.***

S14.6.1.1 ***Procedure.***

S14.6.1.1.1 ***Abrading pad.*** A new, unused abrading pad constructed of 0000 steel wool not less than 2.5 ±.1 cm wide, rubber cemented to a rigid base shaped to the same vertical contour of the lens, is used for each test. The abrading pad support is equal in size to the pad and the center of the support surface is within ±2 mm of parallel to the lens surface. The “grain” of the pad is oriented perpendicular to the direction of motion. The density of the pad is such that when the pad is resting unweighted on the lens, the base of the pad is no closer than 3.2 mm to the lens at its closest point.

S14.6.1.1.2 ***Abrading pad alignment.*** A sample headlamp is mounted in the abrasion test fixture of Figure 5 with the lens facing upward. When mounted on its support and resting on the lens of the test headlamp, the abrading pad is then weighted such that a pad pressure of 14 ±1 KPa. exists at the center and perpendicular to the face of the lens.

S14.6.1.1.3 ***Abrasion test procedure.*** The pad is cycled back and forth (1 cycle) for 11 cycles at 4 ±0.8 in (10 ±2 cm) per second over at least 80% of the lens surface, including all the area between the upper and lower aiming pads, but not including lens trim rings and edges. A pivot must be used if it is required to follow the contour of the lens.

S14.6.1.2 ***Performance requirements.*** After completion of the abrasion test the sample headlamp must meet the requirements of the applicable photometry tests of Table XIX and Table XVIII. A $^{1}/_{4}$° reaim is permitted in any direction at any test point.

S14.6.2 ***Chemical resistance test.***

S14.6.2.1 ***Procedure.***

S14.6.2.1.1 ***Test fluids.*** The five test fluids used in the chemical resistance test include:

(a) ASTM Reference Fuel C, which is composed of Isooctane 50% volume and Toluene 50% volume. Isooctane must conform to A2.7 in the ASTM Motor Fuels section (incorporated by reference, see § 571.5), and Toluene must conform to ASTM D362–84 (incorporated by reference, see § 571.5). ASTM Reference Fuel C must be used as specified in: Paragraph A2.3.2 and A2.3.3 of the ASTM Motor Fuels section (incorporated by reference, see § 571.5); and OSHA Standard 29 CFR 1910.106—Handling Storage and Use of Flammable Combustible Liquids;

(b) Tar remover (consisting by volume of 45% xylene and 55% petroleum base mineral spirits);

(c) Power steering fluid (as specified by the vehicle manufacturer for use in the motor vehicle on which the headlamp is intended to be installed);

(d) Windshield washer fluid consisting of 0.5% monoethanolamine with the remainder 50% concentration of methanol/distilled water by volume; and

(e) Antifreeze (50% concentration of ethylene glycol/distilled water by volume).

S14.6.2.1.2 ***Fluid application.*** The entire exterior lens surface of the sample headlamp mounted in the headlamp test fixture and top surface of the lens-reflector joint is wiped once to the left and once to the right with a 6 inch square soft cotton cloth (with pressure equally applied) which has been saturated once in a container with 2 ounces of five different test fluids listed above. The lamp is wiped within 5 seconds after removal of the cloth from the test fluid. A new lamp sample may be used with each fluid.

S14.6.2.1.3 ***Test duration.*** After the headlamp sample has been wiped with the test fluid, it must be stored in its designed operating attitude for 48 hours at a temperature of 23 °C ±4 °C and a relative humidity of 30% ±10%. At the end of the 48-hour period, the headlamp is wiped clean with a soft dry cotton cloth and visually inspected.

S14.6.2.2 ***Performance requirements.*** After completion of the chemical resistance test, the sample headlamp must have no surface deterioration, coating delamination, fractures, deterioration of bonding or sealing materials, color bleeding, or color pickup visible without magnification and the headlamp must meet the requirements of the applicable photometry tests of Table XIX and Table XVIII. A $^{1}/_{4}$° reaim is permitted in any direction at any test point.

S14.6.3 ***Corrosion test.***

S14.6.3.1 ***Procedure.*** A sample headlamp, mounted on a headlamp test fixture in designed operating position and including all accessory equipment necessary to operate in its normal manner, is subjected to a salt spray (fog) test in accordance with ASTM B117–73 (incorporated by reference, see § 571.5), for 50 total hours, consisting of two periods of 24 hours exposure followed by a 1 hour drying period. If a portion of the device is completely protected in service, that portion is covered to prevent salt fog entry during exposure. After removal from the salt spray and the final 1 hour drying period the sample headlamp is

examined for corrosion that affects any other applicable tests contained in S14.6. If such corrosion is found, the affected test(s) must be performed on the corrosion sample and the results recorded.

S14.6.3.2 ***Performance requirements.*** After completion of the corrosion test, the sample headlamp must not have any observed corrosion which would result in the failure of any other applicable tests contained in S14.6 and no corrosion of the headlamp mounting and aiming mechanism that would result in the failure of the aiming adjustment tests, inward force test, or torque deflection test of S14.6.

S14.6.4 ***Corrosion-connector test.***

S14.6.4.1 ***Procedure.***

S14.6.4.1.1 A headlamp connector test must be performed on each filament circuit of the sample headlamp prior to the test in S14.6.4.1.2 according to Figure 4 and S14.6.15. The power source is set to provide 12.8 volts and the resistance must be set to produce 10 amperes.

S14.6.4.1.2 The headlamp, with connector attached to the terminals, unfixtured and in its designed operating attitude with all drain holes, breathing devices or other designed openings in their normal operating positions, is subjected to a salt spray (fog) test in accordance with ASTM B117–73 (incorporated by reference, see § 571.5), for 240 hours, consisting of ten successive 24-hour periods.

S14.6.4.1.3 During each period, the headlamp is mounted in the middle of the chamber and exposed for 23 hours to the salt spray. The spray is not activated during the 24th hour. The bulb is removed from the headlamp and from the test chamber during the one hour of salt spray deactivation and reinserted for the start of the next test period, at the end of the first and last three 23-hour periods of salt spray exposure, and at the end of any two of the fourth through seventh 23-hour periods of salt-spray exposure.

S14.6.4.1.4 The test chamber is closed at all times except for a maximum of 2 minutes which is allowed for removal or replacement of a bulb during each period.

S14.6.4.1.5 After the ten periods, the lens-reflector unit without the bulb must be immersed in deionized water for 5 minutes, then secured and allowed to dry by natural convection only.

S14.6.4.1.6 Using the voltage, resistance and pre-test set up of S14.6.4.1.1 the current in each filament circuit must be measured after the test conducted in S14.6.4.1.2.

S14.6.4.2 ***Performance requirements.***

S14.6.4.2.1 After the completion of the corrosion-connector test, the sample headlamp must show no evidence of external or internal corrosion or rust visible without magnification.

S14.6.4.2.2 Loss of adhesion of any applied coating must not occur more than 3.2 mm from any sharp edge on the inside or out.

S14.6.4.2.3 Corrosion may occur on terminals only if the test current produced during the test of S14.6.4.1.6 is not less than 9.7 amperes.

S14.6.5 ***Dust test.***

S14.6.5.1 ***Procedure.***

S14.6.5.1.1 A sample headlamp, mounted on a headlamp test fixture, with all drain holes, breathing devices or other designed openings in their normal operating positions, is positioned within a cubical box, with inside measurements of 900 mm on each side or larger if required for adequate wall clearance (*i.e.*, a distance of at least 150 mm between the headlamp and any wall of the box).

S14.6.5.1.2 The box contains 4.5 kg of fine powdered cement which conforms to the ASTM C150–77 (incorporated by reference, see § 571.5). Every 15 minutes, the cement is agitated by compressed air or fan blower(s) by projecting blasts of air for a two-second period in a downward direction so that the cement is diffused as uniformly as possible throughout the entire box.

S14.6.5.1.3 This test is continued for five hours after which the exterior surfaces of the headlamp are wiped clean.

S14.6.5.2 ***Performance requirements.*** After completion of the dust test, the sample headlamp must meet the requirements of the applicable photometry tests of Table XIX and Table XVIII. A $^{1}/_{4}$° reaim is permitted in any direction at any test point.

S14.6.6 ***Temperature cycle test and internal heat test.***

S14.6.6.1 ***Samples.*** A sample headlamp with one or more replaceable light sources is tested according to the procedures of this section for a temperature cycle test and an internal heat test. The same sample headlamp is used in the temperature cycle test and then in the internal heat test.

S14.6.6.2 ***General procedure.***

S14.6.6.2.1 Tests are made with all filaments lighted at design voltage that are intended to be used simultaneously in the headlamp and which in combination draw the highest total wattage. These include but are not limited to filaments used for turn signal lamps, fog lamps, parking lamps, and headlamp lower beams lighted with upper beams when the wiring harness is so connected on the vehicle.

S14.6.6.2.2 If a turn signal is included in the headlamp assembly, it is operated at 90 flashes a minute with a 75% ±2% current “on time.”

S14.6.6.2.3 If the lamp produces both the upper and lower beam, it is tested in both the upper beam mode and the lower beam mode under the conditions above described, except for a headlamp with a single type HB1 or type HB2 light source.

S14.6.6.3 ***Temperature cycle test.***

S14.6.6.3.1 ***Procedure.***

S14.6.6.3.1.1 A sample headlamp, mounted on a headlamp test fixture, is subjected to 10 complete consecutive cycles having the thermal cycle profile shown in Figure 6.

S14.6.6.3.1.2 During the hot cycle, the lamp, is energized commencing at point “A” of Figure 6 and de-energized at point “B.”

S14.6.6.3.1.3 Separate or single test chambers may be used to generate the environment of Figure 6.

S14.6.6.3.1.4 All drain holes, breathing devices or other openings or vents of the headlamps are set in their normal operating positions.

S14.6.6.3.2 ***Performance requirements.*** After completion of the temperature cycle test, the sample headlamp must:

(a) show no evidence of delamination, fractures, entry of moisture, or deterioration of bonding material, color bleeding, warp or deformation visible without magnification;

(b) show no lens warpage greater than 3 mm when measured parallel to the optical axis at the point of intersection of the axis of each light source with the exterior surface of the lens; and

(c) meet the requirements of the applicable photometry tests of Table XIX and Table XVIII. A $^{1}/_{4}$° reaim is permitted in any direction at any test point.

S14.6.6.4 ***Internal heat test.***

S14.6.6.4.1 ***Procedure.***

S14.6.6.4.1.1 A sample headlamp lens surface that would normally be exposed to road dirt is uniformly sprayed with any appropriate mixture of dust and water or other materials to reduce the photometric output at the H–V test point of the upper beam (or the $^{1}/_{2}$°D–1$^{1}/_{2}$°R test point of the lower beam as applicable) to 25% ±2% of the output originally measured in the applicable photometric compliance test.

S14.6.6.4.1.2 A headlamp with a single type HB1 or type HB2 light source is tested on the upper beam only.

S14.6.6.4.1.3 Such reduction is determined under the same conditions as that of the original photometric measurement.

S14.6.6.4.1.4 After the photometric output of the lamp has been reduced as specified above, the sample lamp and its mounting hardware must be mounted in an environmental chamber in a manner similar to that indicated in Figure 7 “Dirt/ Ambient Test Setup.”

S14.6.6.4.1.5 The headlamp is soaked for one hour at a temperature of 35° + 4° − 0 °C) and then the lamp is energized according to the procedure of this section for one hour in a still air condition, allowing the temperature to rise from the soak temperature.

S14.6.6.4.1.6 At the end of one hour the sample lamp is returned to a room ambient temperature of 23° + 4° − 0 °C and a relative humidity of 30% ±10% and allowed to stabilize to the room ambient temperature. The lens is then cleaned.

S14.6.6.4.2 ***Performance requirements.*** After completion of the temperature cycle test and meeting its requirements, and completion of the internal heat test, the sample headlamp must:

(a) have no lens warpage greater than 3 mm when measured parallel to the optical axis at the point of intersection of the axis of each light source with the exterior surface of the lens, and

(b) meet the requirements of the applicable photometry tests of Table XIX and Table XVIII. A 1/4° reaim is permitted in any direction at any test point.

S14.6.7 ***Humidity test.***

S14.6.7.1 ***Procedure.***

S14.6.7.1.1 The test fixture consists of a horizontal steel plate to which three threaded steel or aluminum rods of 1/2 inch diameter are screwed vertically behind the headlamp.

S14.6.7.1.2 The sample headlamp assembly is clamped to the vertical rods, which are behind the headlamp. All attachments to the headlamp assembly are made behind the lens and vents or openings, and are not within 2 inches laterally of a vent inlet or outlet.

S14.6.7.1.3 The mounted headlamp assembly is oriented in its design operating position, and is placed in a controlled environment at a temperature of 100° + 7°−0 °F (38° + 4°−0 °C) with a relative humidity of not less than 90%. All drain holes, breathing devices, and other openings are set in their normal operation positions for all phases of the humidity test.

S14.6.7.1.4 The headlamp is subjected to 24 consecutive 3-hour test cycles. In each cycle, the headlamp is energized for 1 hour at design voltage with the highest combination of filament wattages that are intended to be used, and then de-energized for 2 hours. If the headlamp incorporates a turn signal then the turn signal flashes at 90 flashes per minute with a 75% ±2% current “on-time.”

S14.6.7.1.5 Within 3 minutes after the completion of the 24th cycle, the air flow test will begin. The following procedure shall occur: the mounted assembly is removed, placed in an insulating box and covered with foam material so that there is no visible air space around the assembly; the box is closed, taken to the air flow test chamber, and placed within it. Inside the chamber, the assembly with respect to the air flow, is oriented in its design operating position. The assembly is positioned in the chamber so that the center of the lens is in the center of the opening of the air flow entry duct during the test. The headlamp has at least 3 inches clearance on all sides, and at least 4 inches to the entry and exit ducts at the closest points. If vent tubes are used which extend below the lamp body, the 3 inches are measured from the bottom of the vent tube or its protection. The temperature of the chamber is 73° + 7° − 0 °F (23° + 4° − 0 °C) with a relative humidity of 30% + 10% − 0%. The headlamp is not energized.

S14.6.7.1.6 Before the test specified in paragraph S14.6.7.1.7 of this section, the uniformity of the air flow in the empty test chamber at a plane 4 inches downstream of the air entry duct is measured over a 4 inch square grid. The uniformity of air flow at each grid point is ±10% of the average air flow specified in paragraph S14.6.7.1.7 of this section.

S14.6.7.1.7 The mounted assembly in the chamber is exposed, for one hour, to an average air flow of 330 + 0 −30 ft/min as measured with an air velocity measuring probe having an accuracy of ±3% in the 330 ft/min range. The average air flow is the average of the velocity recorded at six points around the perimeter of the lens. The six points are determined as follows: At the center of the lens, construct a horizontal plane. The first two points are located in the plane, 1 inch outward from the intersection of the plane and each edge of the lens. Then, trisect the distance between these two points and construct longitudinal vertical planes at the two intermediate locations formed by the trisection. The four remaining points are located in the vertical planes, one inch above the top edge of the lens, and one inch below the bottom edge of the lens.

S14.6.7.1.8 After one hour, the headlamp is removed and inspected for moisture.

S14.6.7.2 ***Performance requirements.*** After completion of the humidity test, the sample headlamp must show no evidence of interior delamination or moisture, fogging or condensation visible without magnification.

S14.6.8 ***Vibration test.***

S14.6.8.1 ***Samples.*** The mounting bracket with a sample headlamp installed must not have a resonant frequency in the 10–55 Hz. range.

S14.6.8.2 ***Procedure.*** The mounted sample headlamp is bolted to the anvil end of the table of the vibration test machine of Figure 21 and vibrated 750 cpm through a distance of $^{1}/_{8}$ in. The table is spring mounted at one end and fitted with steel calks on the underside of the other end. The table is of sufficient size to completely contain the test fixture base with no overhang. The calks are to make contact with the steel anvil once during each cycle at the completion of the fall. The rack is operated under a spring tension of 60 to 70 lb. The vibration is applied in the vertical axis of the headlamp as mounted on the vehicle. Bulb filaments are not energized during the test. The test is continued for 1 hour.

S14.6.8.3 ***Performance requirements.*** After completion of the vibration test, there must be no evidence of loose or broken parts, other than filaments, visible without magnification.

S14.6.9 ***Sealing test.***

S14.6.9.1 ***Procedure.***

S14.6.9.1.1 An unfixtured sample headlamp in its design mounting position is placed in water at a temperature of 176° ±5 °F (80° ±3 °C) for one hour. The headlamp is energized in its highest wattage mode, with the test voltage at 12.8 ±0.1 V during immersion.

S14.6.9.1.2 The lamp is then de-energized and immediately submerged in its design mounting position into water at 32° + 5° −0 °F (0° + 3° −0 °C). The water is in a pressurized vessel, and the pressure is increased to 10 psi (70 kPa), upon placing the lamp in the water. The lamp must remain in the pressurized vessel for a period of thirty minutes.

S14.6.9.1.3 This entire procedure is repeated for four cycles.

S14.6.9.1.4 Then the lamp is inspected for any signs of water on its interior. During the high temperature portion of the cycles, the lamp is observed for signs of air escaping from its interior.

S14.6.9.2 ***Performance requirements.*** After completion of the sealing test, a sample headlamp confirmed to be sealed need not meet the corrosion test, dust test, or humidity test of this Section. If any water is on the interior or air escapes, the lamp is not a sealed lamp.

S14.6.10 ***Chemical resistance test of reflectors of replaceable lens headlamps test.***

S14.6.10.1 ***Procedure.***

S14.6.10.1.1 ***Test fluids.*** The three test fluids used in the chemical resistance test include;

(a) Tar remover (consisting by volume of 45% xylene and 55% petroleum base mineral spirits);

(b) Mineral spirits; and

(c) Fluids other than water contained in the manufacturer's instructions for cleaning the reflector.

S14.6.10.1.2 ***Fluid application.*** With a sample headlamp in the headlamp test fixture and the lens removed, the entire surface of the reflector that receives light from a headlamp light source is wiped once to the left and once to the right with a 6-inch square soft cotton cloth (with pressure equally applied) which has been saturated once in a container with 2 ounces of one of the test fluids listed in S14.6.10.1.1. The lamp is wiped within 5 seconds after removal of the cloth from the test fluid.

S14.6.10.1.3 ***Test duration.*** After the headlamp has been wiped with the test fluid, it is stored in its designed operating attitude for 48 hours at a temperature of 73° ±7 °F (23° ±4 °C) and a relative humidity of 30% ±10%. At the end of the 48-hour period, the headlamp is wiped clean with a soft dry cotton cloth and visually inspected.

S14.6.10.2 ***Performance requirements.*** After completion of the chemical resistance test, the sample headlamp must have no surface deterioration, coating delamination, fractures, deterioration of bonding or sealing materials, color bleeding or color pickup visible without magnification and the headlamp must meet the requirements of the applicable photometry tests of Table XIX and Table XVIII. A 1/4° re-aim is permitted in any direction at any test point.

S14.6.11 ***Corrosion resistance test of reflectors of replaceable lens headlamps test.***

S14.6.11.1 ***Procedure.***

S14.6.11.1.1 A sample headlamp with the lens removed, unfixtured and in its designed operating attitude with all drain holes, breathing devices or other designed openings in their normal operating positions, must be subjected to a salt spray (fog) test in accordance with ASTM B117–73, *Method of Salt Spray (Fog) Testing* (incorporated by reference, see 571.108 S5.2 of this title), for 24 hours, while mounted in the middle of the chamber.

S14.6.11.1.2 Afterwards, the headlamp must be stored in its designed operating attitude for 48 hours at a temperature of 73° ±7 °F (23° ±4 °C) and a relative humidity of 30% ±10% and allowed to dry by natural convection only. At the end of the 48-hour period, the reflector must be cleaned according to the instructions supplied with the headlamp manufacturer's replacement lens, and inspected. The lens and seal must then be attached according to these instructions and the headlamp tested for photometric performance.

S14.6.11.2 ***Performance requirements.*** After the completion of the corrosion test, the sample headlamp must show no evidence of corrosion or rust visible without magnification on any part of the headlamp reflector that receives light from a headlamp light source, on any metal light or heat shield assembly, or on a metal reflector of any other lamp. The sample headlamp with the replacement lens installed must meet the requirements of the applicable photometry tests of Table XIX and Table XVIII. A $^{1}/_{4}$° re-aim is permitted in any direction at any test point.

S14.6.12 ***Inward force test.***

S14.6.12.1 ***Procedure.*** A sample headlamp mechanism, including the aiming adjusters, must be subjected to an inward force of 222 N directed normal to the headlamp aiming plane and symmetrically about the center of the headlamp lens face.

S14.6.12.2 ***Performance requirements.*** After the completion of the inward force test, a sample headlamp must not permanently recede by more than 2.5 mm. The aim of the headlamp must not permanently deviate by more than 3.2 mm at a distance of 7.6 m. The aim of any headlamp that is capable of being mechanically aimed by externally applied aiming devices must not change by more than 0.30°.

S14.6.13 ***Torque deflection test.***

S14.6.13.1 ***Procedure.***

S14.6.13.1.1 The sample headlamp assembly is mounted in designed vehicle position and set at nominal aim (H = 0, V = 0).

S14.6.13.1.2 A sealed beam headlamp, except Type G and Type H, is removed from its mounting and replaced by the applicable deflectometer. (Type C and Type D-Figure 18, Type A and Type E-Figure 16, Type B-Figure 17, and Type F-Figure 14).

S14.6.13.1.3 Sealed beam headlamps Type G and Type H have the adapter of Figure 15 and the deflectometer of Figure 14 attached to the headlamp.

S14.6.13.1.4 A torque of 2.25 Nm must be applied to the headlamp assembly through the deflectometer and a reading on the thumbwheel is taken. The torque must be removed and a second reading on the thumbwheel is taken.

S14.6.13.1.5 Headlamps other than sealed beam headlamps must have the downward force used to create the torque applied parallel to the aiming reference plane, through the aiming pads, and displaced forward using a lever arm such that the force is applied on an axis that is perpendicular to the aiming reference plane and originates at the center of the aiming pad pattern (see Figure 3).

S14.6.13.1.6 For headlamps using the aiming pad locations of Group I, the distance between the point of application of force and the aiming reference plane is not less than 168.3 mm plus the distance from the aiming reference plane to the secondary plane, if used.

S14.6.13.1.7 For headlamps using the aiming pad locations of Group II, the distance between the point of application of force and the aiming reference plane is not less than 167.9 mm plus the distance to the secondary plane, if used.

S14.6.13.1.8 For headlamps using the nonadjustable Headlamp Aiming Device Locating Plates for the 146 mm diameter, the 176 mm diameter, and the 92x150 mm sealed beam, the distance between the point of application of force and the aiming plane is not, respectively, less than 177.4 mm, 176.2 mm, and 193.7 mm.

S14.6.13.2 ***Performance requirements.*** The aim of each sample headlamp must not deviate more than 0.30° when the downward torque is removed.

S14.6.14 ***Retaining ring test.***

S14.6.14.1 ***Procedure.*** A sample headlamp with the minimum flange thickness of: Type A–31.5 mm, Type B–10.1 mm, Type C–11.8 mm, Type D–11.8 mm, Type E–31.5 mm, and Type F–8.6 mm, is secured between the appropriate mounting ring and retaining ring (mounting ring and aiming ring for Type F).

S14.6.14.2 ***Performance requirements.*** The sample headlamp when secured per the procedure must be held tight enough that it will not rattle.

S14.6.15 ***Headlamp connector test.***

S14.6.15.1 ***Procedure.*** A sample headlamp connected into the test circuit of Figure 4 has the power supply adjusted until 10 amperes DC are flowing through the circuit. The test is repeated for each filament circuit of the headlamp.

S14.6.15.2 ***Performance requirements.*** The voltage drop, as measured in the test circuit of Figure 4, must not exceed 40 mv DC in any applicable filament circuit of the sample headlamp.

S14.6.16 ***Headlamp wattage test.***

S14.6.16.1 ***Procedure.*** A sample headlamp that has been seasoned is energized so as to have 12.8v ±20 mv DC applied across each filament circuit and the current flowing in each circuit is measured.

S14.6.16.2 ***Performance requirements.*** The wattage of each filament circuit of the sample headlamp must not exceed the applicable value for that type of headlamp as shown in Table II.

S14.6.17 ***Aiming adjustment test-laboratory.***

S14.6.17.1 ***Procedure.*** A sample headlamp is mounted in design position at nominal (H = 0, V = 0) aim with an accurate measuring device such as a spot projector or other equally accurate means attached. The headlamp is adjusted to the extremes of travel in each horizontal and vertical direction.

S14.6.17.2 ***Performance requirements.*** Visually aimed lower beam headlamps without a VHAD are required not to have a horizontal adjustment mechanism and horizontal aim range requirements do not apply.

S14.6.17.2.1 A sample sealed beam headlamp, other than a Type F, tested per the procedure must provide a minimum of ±4.0° adjustment range in both the vertical and horizontal planes and if equipped with independent vertical and horizontal aiming screws, the adjustment must be such that neither the vertical nor horizontal aim must deviate more than 100 mm from horizontal or vertical planes, respectively, at a distance of 7.6 m through an angle of ±4.0°.

S14.6.17.2.2 A sample Type F sealed beam, integral beam, replaceable bulb, or combination headlamp tested per the procedure must provide a minimum of ±4.0° adjustment range in the vertical plane and ±2.5° in the horizontal plane and if equipped with independent vertical and horizontal aiming screws, the adjustment must be such that neither the vertical nor horizontal aim must deviate more than 100 mm from horizontal or vertical planes, respectively, at a distance of 7.6 m through an angle of ±2.5° and ±4.0°, respectively.

S14.6.17.2.3 A sample headlamp that is aimed by moving the reflector relative to the lens and headlamp housing, and vice versa must provide a minimum adjustment range in the vertical plane not less than the full range of the pitch on the vehicle on which it is installed and ±2.5° in the horizontal plane.

S14.6.18 ***Aiming adjustment test-on vehicle.***

S14.6.18.1 ***Procedure.***

S14.6.18.1.1 A sample headlamp is mounted on the vehicle at nominal (H = 0, V = 0) aim with an accurate measuring device such as a spot projector or other equally accurate means attached.

S14.6.18.1.2 The installed range of static pitch angle is, at a minimum, determined from unloaded vehicle weight to gross vehicle weight rating, and incorporates pitch angle effects from maximum trailer or trunk loadings, the full range of tire intermix sizes and suspensions recommended and/or installed by the vehicle manufacturer, and the anticipated effects of variable passenger loading.

S14.6.18.1.3 The headlamp is adjusted to the extremes of travel in each horizontal and vertical direction.

S14.6.18.2 ***Performance requirements.***

S14.6.18.2.1 A sample headlamp tested per the procedure must provide a minimum vertical adjustment range not less than the full range of pitch of the vehicle on which it is installed.

S14.6.18.2.2 The vertical aim mechanism must be continuously variable over the full range.

S14.6.18.2.3 The adjustment of one aim axis through its full on-vehicle range must not cause the aim of the other axis to deviate more than ±0.76°. If this performance is not achievable, the requirements of S10.18.3.1 apply, except that if the aiming mechanism is not a VHAD, the requirements specific to VHADs are not applicable, and the instruction must be specific to the aiming mechanism installed.

S14.7 ***Replaceable light source physical test procedures and performance requirements.***

S14.7.1 ***Deflection test for replaceable light sources.***

S14.7.1.1 ***Procedure.***

S14.7.1.1.1 With the sample light source rigidly mounted in a fixture in a manner indicated in Figure 8, a force 4.0 ±0.1 pounds (17.8 ±0.4N) is applied at a distance "A" from the reference plane perpendicular to the longitudinal axis of the glass capsule and parallel to the smallest dimension of the pressed glass capsule seal.

S14.7.1.1.2 The force is applied (using a rod with a hard rubber tip with a minimum spherical radius of .039 in [1 mm]) radially to the surface of the glass capsule in four locations in a plane parallel to the reference plane and spaced at a distance "A" from that plane. These force applications are spaced 90° apart starting at the point perpendicular to the smallest dimension of the pressed seal of the glass capsule.

S14.7.1.1.3. The bulb deflection is measured at the glass capsule surface at 180° opposite to the force application. Distance "A" for a replaceable light source other than an HB Type is the dimension provided in accordance with appendix A of part 564 of this chapter, section I.A.1 if the light source has a lower beam filament, or as specified in section I.B.1 if the light source has only an upper beam filament.

S14.7.1.2 ***Performance requirements.*** After completion of the deflection test, a sample light source must have no permanent deflection of the glass envelope exceeding 0.13 mm in the direction of applied force.

S14.7.2 ***Pressure test for replaceable light sources.***

S14.7.2.1 ***Procedure.***

S14.7.2.1.1 The capsule, lead wires and/or terminals, and seal on each sample Type HB1, Type HB3, Type HB4, and Type HB5 light source, and on any other replaceable light source which uses a seal, is installed in a pressure chamber as shown in Figure 10 so as to provide an airtight seal. The diameter of the aperture in Figure 10 on a replaceable light source (other than an HB Type) must be that dimension furnished for such light source in compliance with appendix A or appendix B of part 564 of this chapter.

S14.7.2.1.2 The light source is immersed in water for one minute while inserted in a cylindrical aperture specified for the light source, and subjected to an air pressure of 70 KPa (10 psig) on the glass capsule side.

S14.7.2.2 ***Performance requirements.*** After completion of the pressure test, the sample light source with an airtight seal on the low pressure (connector side) must show no evidence of air bubbles on that side.

S14.7.3 ***Replaceable light source power and flux measurement procedure.*** The measurement of maximum power and luminous flux that is submitted in compliance with section VII of appendix A of part 564 of this chapter, or section IV of appendix B of part 564 of this chapter, is made in accordance with this paragraph.

S14.7.3.1 ***Seasoning.*** The filament or discharge arc is seasoned before measurement of either maximum power and luminous flux.

S14.7.3.1.1 ***Resistive filament source.*** Seasoning of a light source with a resistive element type filament is made in accordance with this S14.2.5.4 of this standard.

S14.7.3.1.2 ***Discharge source.*** For a light source using excited gas mixtures as a filament or discharge arc, seasoning of the light source system, including any ballast required for its operation, is made in accordance with section 4.0 of SAE Recommended Practice J2009 (1993) (incorporated by reference, see § 571.5).

S14.7.3.2 ***Test voltage.*** Measurements are made with a direct current test voltage of 12.8 v regulated within one quarter of one percent.

S14.7.3.3 ***Luminous flux measurement.*** The measurement of luminous flux is made in accordance with IES LM 45 (incorporated by reference, see § 571.5).

S14.7.3.3.1 ***Resistive filament light source setup.*** Luminous flux measurements are made with the black cap installed on Type HB1, Type HB2, Type HB4, and Type HB5, and on any other replaceable light source so designed; and is with the electrical conductor and light source base shrouded with an opaque white cover, except for the portion normally located within the interior of the lamp housing. The measurement of luminous flux for the Types HB3 and HB4 is made with the base covered with a white cover as shown in the drawings for Types HB3 and HB4 filed in Docket No. NHTSA 98–3397. The white covers are used to eliminate the likelihood of incorrect lumen measurement that will occur should the reflectance of the light source base and electrical connector be low.

S14.7.3.3.2 ***Discharge light source setup.*** With the test voltage applied to the ballast input terminals, the measurement of luminous flux is made with the black cap installed, if so designed, and is made with an opaque white colored cover, except for the portion normally located within the interior of the lamp housing.

S14.8 ***Vehicle headlamp aiming devices (VHAD) physical test procedures and performance requirements.***

S14.8.1 ***Samples.*** The same VHAD and associated headlamp(s) or headlamp assembly must be rigidly mounted in a headlamp test fixture with the aiming plane horizontal and vertical and with the scale on the device set at 0.

S14.8.2 ***Scale graduation test.***

S14.8.2.1 ***Procedure.*** Check each graduation on the horizontal and vertical aim scales.

S14.8.2.2 ***Performance requirements.*** Scale graduation from correct aim must not exceed ±0.2° horizontally and ±0.1° vertically.

S14.8.3 ***Cold scale graduation test.***

S14.8.3.1 ***Procedure.*** The VHAD and an unlighted headlamp assembly must then be stabilized at −7° ±3 °C in a circulating air environmental test chamber for a 30 minute temperature soak.

S14.8.3.2 ***Performance requirements.*** After completion of a 30 minute temperature soak the variation from correct aim shown by the sample VHAD must not exceed ±0.2° horizontally and ±0.1° vertically.

S14.8.4 ***Hot scale graduation test.***

S14.8.4.1 ***Procedure.*** The VHAD and the headlamp assembly with its highest wattage filament, or combination of filaments intended to be used simultaneously, energized at its design voltage, is then stabilized at 38° ±3 °C in a circulating air environmental test chamber for a 30 minute temperature soak.

S14.8.4.2 ***Performance requirements.*** After completion of a 30 minute temperature soak the variation from correct aim shown by the sample VHAD must not exceed ±0.2° horizontally and ±0.1° vertically.

S14.8.5 ***Thermal cycle test.***

S14.8.5.1 ***Procedure.*** The VHAD and an unlighted headlamp assembly are then placed in a circulating air environmental test chamber and exposed to a temperature of 60° ±3 °C for 24 hours, followed by a temperature of −40° ±3 °C for 24 hours, and are then permitted to return to room temperature.

S14.8.5.2 ***Performance requirements.*** After completion of the thermal cycle test the variation from correct aim shown by the sample VHAD must not exceed ±0.2° horizontally and ±0.1° vertically and the VHAD and headlamp assembly must show no damage which would impair its ability to perform as specified in this standard.

S14.8.6 ***Corrosion test.***

S14.8.6.1 ***Procedure.*** The VHAD and headlamp assembly are then tested according to the headlamp corrosion test of S14.6.3.

S14.8.6.2 ***Performance requirements.*** After completion of the corrosion test the sample VHAD and headlamp must not have any observed corrosion that would result in the failure of any other applicable tests contained in this section.

S14.8.7 ***Photometry test.***

S14.8.7.1 ***Procedure.*** The VHAD and headlamp assembly are then tested for photometric compliance according to the procedure of S14.2.5 and for replacement units per S10.18.8.4.

S14.8.7.2 ***Performance requirements.*** The sample headlamp must comply with the applicable photometric requirements of Table XIX and Table XVIII and with replacement units installed per S10.18.8.4.

S14.9 ***Associated equipment physical test procedures and performance requirements.***

S14.9.1 ***Turn signal operating unit durability test.***

S14.9.1.1 ***Power supply specifications.*** During the test, the unit is operated at 6.4 volts for 6 volt systems or 12.8 volts for 12 volt systems from a power supply meeting the following requirements:

(a) An output current that is at least 10 times the load current;

(b) Voltage regulation that allows a voltage change of less than 5%;

(c) Ripple voltage of not more than 5%;

(d) A response time of not more than 25 milliseconds rise time from 0 to rated current at rated voltage in a pure resistance circuit; and

(e) An output impedance of not more than 0.005 ohms dc.

S14.9.1.2 ***Procedure.***

S14.9.1.2.1 The sample unit is operated with the maximum bulb load it will experience on the vehicle on which it will be installed. Bulbs that fail during the test are replaced. The turn signal flasher is not to be included in the test circuit. When the unit includes a self-canceling means, the test equipment is arranged so that the unit will be turned “off” in its normal operating manner.

S14.9.1.2.2 The test is conducted at a rate not to exceed 15 complete cycles per minute. One complete cycle consists of the following sequence: Off, left turn, off, right turn, and return to off.

S14.9.1.2.3 The voltage drop from the input terminal of the device to each lamp output terminal, including 3 in of 16 or 18 gage wire, is measured at the start of the test, at intervals of not more than 25,000 cycles during the test, and at the completion of the test.

S14.9.1.3 ***Performance requirements.***

S14.9.1.3.1 A turn signal operating unit is considered to have met the requirements of the durability test if it remains operational after completing at least 100,000 cycles, and the voltage drop between the input contact and any output contact, including required length of wire, does not exceed 0.25 volts.

S14.9.1.3.2 A turn signal operating unit is considered to have met the requirements of the durability test if it remains operational after completing at least 175,000 cycles for a unit installed on a multipurpose passenger vehicle, truck, or bus 2032 mm or more in overall width, and the voltage drop between the input contact and any output contact, including required length of wire, does not exceed 0.25 volts.

S14.9.1.3.3 If stop signals also operate through the turn signal operating unit, the voltage drop of any additional switch contacts must meet the same requirements as the turn signal contacts.

S14.9.2 ***Vehicular hazard warning signal operating unit durability test.***

S14.9.2.1 ***Procedure.***

S14.9.2.1.1 The sample unit is operated at its rated voltage with the maximum bulb load it will experience on the vehicle on which it will be installed. Bulbs that fail during the test are replaced. The hazard warning signal flasher is not to be included in the test circuit.

S14.9.2.1.2 The unit is turned “on” and “off” in its normal operating manner at a rate not to exceed 15 complete cycles per minute. One complete cycle consists of the sequence: Off, on, and return to off. The test consists of 10,000 cycles at an ambient temperature of 75° ±10 °F followed by 1 hour constant “on” at the same temperature.

S14.9.2.1.3 The voltage drop from the input terminal of the device to each lamp output terminal, including 3 in of 16 or 18 gage wire, is measured at the start of the test and at the completion of the test.

S14.9.2.2 ***Performance requirements.*** A hazard warning signal operating unit is considered to have met the requirements of the durability test if it remains operational after completing 10,000 cycles and the 1 hour constant “on” and the voltage drop between the input contact and any output contact, including required length of wire, does not exceed 0.3 volts for either 6.4 or 12.8 line voltage both at the start and completion of the test.

S14.9.3 ***Turn signal flasher and vehicular hazard warning signal flasher tests.***

S14.9.3.1 ***Standard test circuit.*** All turn signal flasher and vehicular hazard warning signal flasher tests use the standard test circuit of Figure 22.

S14.9.3.1.1 ***Test circuit setup.***

S14.9.3.1.1.1 The effective series resistance in the total circuit between the power supply and the bulb sockets (excluding the flasher and bulb load(s) using shorting bars) is 0.10 ±0.01 ohm.

S14.9.3.1.1.2 The circuit resistance at A–B of Figure 22 is measured with flasher and bulb load(s) each shorted out with an effective shunt resistance not to exceed 0.005 ohms.

S14.9.3.1.1.3 The voltage to the bulbs at C–D of Figure 22 is adjusted to 12.8 volts (or 6.4 volts) with the flasher shorted out by an effective shunt resistance not to exceed 0.005 ohms. The load current is adjusted by simultaneously adjusting trimmer resistors, R.

S14.9.3.1.1.4 For testing fixed-load flashers at other required voltages, adjust the power supply to provide required voltages, at the required temperatures, at C–D of Figure 22, without readjustment of trimming resistors, R.

S14.9.3.1.1.5 For variable-load flashers, the circuit is first adjusted for 12.8 volts (or 6.4 volts) at C–D of Figure 22, with the minimum required load, and the power supply is adjusted to provide other required test voltages, at required temperatures, at C–D of Figure 22, without readjustment of trimming resistors, R (each such required voltage being set with the minimum required load in place). The required voltage tests with the maximum load are conducted without readjusting each corresponding power supply voltage, previously set with minimum bulb load.

S14.9.3.1.1.6 A suitable high impedance measuring device connected to points X–Y in Figure 22 is used for measuring flash rate, percent current "on" time, and voltage drop across the flasher. The measurement of these quantities does not affect the circuit.

S14.9.3.2 ***Power supply specifications.***

S14.9.3.2.1 ***Starting time, voltage drop, and flash rate and percent current "on" time tests.*** The power supply used in the standard test circuit for conducting the starting time, the voltage drop, and the flash rate and percent current "on" time tests must comply with the following specifications:

(a) Must not generate any adverse transients not present in motor vehicles;

(b) Be capable of supplying 11–16 vdc for 12 volt flashers and 5–9 vdc for 6 volt flashers to the input terminals of the standard test circuit;

(c) Be capable of supplying required design current(s) continuously and inrush currents as required by the design bulb load complement;

(d) Be capable of supplying an output voltage that does not deviate more than 2% with changes in the static load from 0 to maximum (not including inrush current) nor for static input line voltage variations;

(e) Be capable of supplying an output voltage that does not deviate more than 1.0 vdc from 0 to maximum load (including inrush current) and must recover 63% of its maximum excursion within 100 μsec; and

(f) Have a ripple voltage of 75mv, peak to peak.

S14.9.3.2.2 ***Durability tests.*** The power supply used in the standard test circuit for conducting durability tests must comply with the following specifications:

(a) Must not generate any adverse transients not present in motor vehicles;

(b) Be capable of supplying 13 vdc and 14 vdc for 12 volt flashers and 6.5 vdc and 7 vdc for 6 volt flashers to the input terminals of the standard test circuit;

(c) Be capable of supplying a continuous output current of the design load for one flasher times the number of flashers and inrush currents as required by the design bulb load complement;

(d) Be capable of supplying an output voltage that does not deviate more than 2% with changes in the static load from 0 to maximum (not including inrush current) and means must be provided to compensate for static input line voltage variations;

(e) Be capable of supplying an output voltage that does not deviate more than 1.0 vdc from 0 to maximum load (including inrush current) and must recover 63% of its maximum excursion within 5 μsec; and

(f) Have a ripple voltage of 300 mv, peak to peak.

S14.9.3.3 ***Turn signal flasher starting time test.***

S14.9.3.3.1 ***Samples.*** Twenty sample flashers chosen from random from fifty representative samples are subjected to a starting time test using the standard test circuit.

S14.9.3.3.2 ***Procedure.***

S14.9.3.3.2.1 The test is conducted in an ambient temperature of 75 ±10 °F with the design load (variable load flashers are tested with their minimum and their maximum design load) connected and the power source for the test circuit adjusted to apply design voltage at the bulbs.

S14.9.3.3.2.2 The time measurement starts when the voltage is initially applied. Compliance is based on an average of three starts for each sample separated by a cooling interval of 5 minutes.

S14.9.3.3.3 ***Performance requirements.*** The requirements of the starting time test are considered to have been met if 17 of 20 samples comply with the following:

(a) A flasher having normally closed contacts must open (turn off) within 1.0 second for a device designed to operate two signal lamps, or within 1.25 seconds for a device designed to operate more than two lamps, or

(b) A flasher having normally open contacts must complete the first cycle (close the contacts and then open the contacts) within 1.5 seconds.

S14.9.3.4 ***Turn signal flasher voltage drop test.***

S14.9.3.4.1 ***Samples.*** The same twenty sample flashers used in the starting time test are subjected to a voltage drop test using the standard test circuit.

S14.9.3.4.2 ***Procedure.***

S14.9.3.4.2.1 The test is conducted in an ambient temperature of 75 ±10 °F with the design load (variable load flashers are tested with their maximum design load) connected and the power source for the standard test circuit adjusted to apply 12.8 volts or 6.4 volts at the bulbs according to the flasher rating.

S14.9.3.4.2.2 The voltage drop is measured between the input and load terminals of the flasher during the “on” period after the flashers have completed at least five consecutive cycles.

S14.9.3.4.3 ***Performance requirements.*** The requirements of the voltage drop test are considered to have been met if 17 of 20 samples comply with the lowest voltage drop across any flasher not exceeding 0.80 volt.

S14.9.3.5 ***Turn signal flasher flash rate and percent current “on” time test.***

S14.9.3.5.1 ***Samples.*** The same twenty sample flashers used in the voltage drop test are subjected to a flash rate and percent of current “on” time test.

S14.9.3.5.2 ***Procedure.***

S14.9.3.5.2.1 The test is conducted using the standard test circuit with the design load (variable load flashers are tested with their minimum and their maximum design load) connected and design voltage applied to the bulbs.

S14.9.3.5.2.2 Compliance is determined using the following combinations of ambient temperature and bulb voltage:

(a) 12.8 volts (or 6.4 volts) and 75° ±10 °F,

(b) 12.0 volts (or 6.0 volts) and 0° ±5 °F,

(c) 15.0 volts (or 7.5 volts) and 0° ±5 °F,

(d) 11.0 volts (or 5.5 volts) and 125° ±5 °F, and

(e) 14.0 volts (or 7.0 volts) and 125° ±5 °F.

S14.9.3.5.2.3 Flash rate and percent current "on" time are measured after the flashers have completed five consecutive cycles and are determined by an average of at least three consecutive cycles.

S14.9.3.5.3 ***Performance requirements.*** The requirements of the flash rate and percent current "on" time test are considered to have been met if 17 of 20 samples comply with the following:

(a) The performance of a normally closed type flasher must be within the unshaded portion of the polygon shown in Figure 2, or

(b) The performance of a normally open type flasher must be within the entire rectangle including the shaded areas shown in Figure 2.

S14.9.3.6 ***Turn signal flasher durability test.***

S14.9.3.6.1 ***Samples.*** Twenty sample flashers chosen from random from the thirty samples not used in the previous tests are subjected to a durability test.

S14.9.3.6.2 ***Procedure.***

S14.9.3.6.2.1 Conformance of the samples to the starting time, voltage drop, and flash rate and percent of current "on" time tests (limited to the 12.8 volts or 6.4 volts and 75° ±10 °F test condition only) is established.

S14.9.3.6.2.2 The test is conducted on each sample with the design load (variable load flashers are tested with their maximum design load) connected and 14 volts or 7.0 volts, according to the flasher rating, applied to the input terminals of the standard test circuit.

S14.9.3.6.2.3 The test cycle consists of 15 seconds on followed by 15 seconds off for a total time of 200 hours in an ambient temperature of 75° ±10 °F.

S14.9.3.6.3 ***Performance requirements.*** The requirements of the durability test are considered to have been met if, after completion, 17 of 20 samples comply with the performance requirements of the starting time, voltage drop, and flash rate and percent of current "on" time tests (limited to the 12.8 volts or 6.4 volts and 75° ±10 °F test condition only) when tested in the standard test circuit with design load and 12.8 volts (or 6.4 volts) applied to the bulbs.

S14.9.3.7 ***Vehicular hazard warning signal flasher starting time test.***

S14.9.3.7.1 ***Samples.*** Twenty sample flashers chosen from random from fifty representative samples are subjected to a starting time test using the standard test circuit.

S14.9.3.7.2 ***Procedure.***

S14.9.3.7.2.1 The test is conducted test in an ambient temperature of 75° ±10 °F with the minimum and maximum load connected and the power source for the test circuit adjusted to apply design voltage at the bulbs.

S14.9.3.7.2.2 The time measurement starts when the voltage is initially applied.

S14.9.3.7.3 ***Performance requirements.*** The requirements of the starting time test are considered to have been met if 17 of 20 samples comply with the following:

(a) A flasher having normally closed contacts must open (turn off) within 1.5 seconds after the voltage is applied, or

(b) A flasher having normally open contacts must complete the first cycle (close the contacts and then open the contacts) within 1.5 seconds after the voltage is applied.

S14.9.3.8 ***Vehicular hazard warning signal flasher voltage drop test.***

S14.9.3.8.1 ***Samples.*** The same twenty sample flashers used in the starting time test are subjected to a voltage drop test using the standard test circuit.

S14.9.3.8.2 ***Procedure.***

S14.9.3.8.2.1 The test is conducted in an ambient temperature of 75° ±10 °F with the maximum design load connected and the power source for the test circuit adjusted to apply design voltage at the bulbs.

S14.9.3.8.2.2 The voltage drop is measured between the input and load terminals of the flasher during the “on” period after the flashers have completed at least five consecutive cycles.

S14.9.3.8.3 ***Performance requirements.*** The requirements of the voltage drop test are considered to have been met if 17 of 20 samples comply with the lowest voltage drop across any flasher must not exceed 0.8 volt.

S14.9.3.9 ***Vehicular hazard warning signal flasher flash rate and percent “on” time test.***

S14.9.3.9.1 ***Samples.*** The same twenty sample flashers used in the voltage drop test are subjected to a flash rate and percent of current “on” time test.

S14.9.3.9.2 ***Procedure.***

S14.9.3.9.2.1 The test is conducted using the standard test circuit by and applying loads of from two signal lamps to the maximum design loading including pilot indicator.

S14.9.3.9.2.2 Compliance is determined using the following combinations of ambient temperature and bulb voltage:

(a) 12.8 volts (or 6.4 volts) and 75° ±10 °F,

(b) 11.0 volts (or 5.5 volts) and 125° ±5 °F,

(c) 11.0 volts (or 5.5 volts) and 0° ±5 °F,

(d) 13.0 volts (or 6.5 volts) and 125° ±5 °F, and

(e) 13.0 volts (or 6.5 volts) and 0° ±5 °F.

S14.9.3.9.2.3 Flash rate and percent current "on" time are measured after the flashers have completed five consecutive cycles and are determined by an average of at least three consecutive cycles.

S14.9.3.9.3 ***Performance requirements.*** The requirements of the flash rate and percent current "on" time test are considered to have been met if 17 of 20 samples comply with the following:

(a) The performance of a normally closed type flasher must be within the unshaded portion of the polygon shown in Figure 2, or

(b) The performance of a normally open type flasher must be within the entire rectangle including the shaded areas shown in Figure 2.

S14.9.3.10 ***Vehicular hazard warning signal flasher durability test.***

S14.9.3.10.1 ***Samples.*** Twenty sample flashers chosen from random from the thirty samples not used in the previous tests are subjected to a durability test.

S14.9.3.10.2 ***Procedure.***

S14.9.3.10.2.1 Conformance of the samples to the starting time, voltage drop, and flash rate and percent of current "on" time tests (limited to the 12.8 volts or 6.4 volts and 75° ±10 °F test condition only) is established.

S14.9.3.10.2.2 The test is conducted on each sample with the maximum design load connected and 13.0 volts (or 6.5 volts) applied to the input terminals of the standard test circuit.

S14.9.3.10.2.3 The flasher is subjected to continuous flashing for a total time of 36 hours in an ambient temperature of 75° ±10 °F.

S14.9.3.10.3 ***Performance requirements.*** The requirements of the durability test are considered to have been met if, after completion, 17 of 20 samples comply with the performance requirements of the starting time, voltage drop, and flash rate and percent of current "on" time tests (limited to the 12.8 volts or 6.4 volts and 75° ±10 °F test condition only) when tested in the standard test circuit with the power source adjusted to provide design voltage to the bulbs and with a minimum load of two signal lamp bulbs and the maximum design load, including pilot lamps, as specified by the manufacturer at an ambient temperature of 75° ±10 °F.

S14.9.3.11 ***Semiautomatic headlamp beam switching device tests.***

S14.9.3.11.1 ***Test conditions.*** All tests are conducted with 13 volts input to the device unless otherwise specified.

S14.9.3.11.2 ***Sensitivity test.***

S14.9.3.11.2.1 ***Samples.*** The sample device is mounted in and operated in the laboratory in the same environment as that encountered on the vehicle, that is tinted glass, grille work, etc.

S14.9.3.11.2.2 ***Procedure.***

S14.9.3.11.2.2.1 The sample device is adjusted for sensitivity in accordance with the manufacturer's instructions. It is exposed to a light source capable of providing a variable intensity of at least 1.5 cd to 150 cd at 100 feet from the sample device.

S14.9.3.11.2.2.2 The device is switched to the lower beam mode in accordance with the “dim” limits specified and switched back to the upper beam mode in accordance with the “hold” limits specified for the specified test positions.

S14.9.3.11.2.2.3 To provide more complete information on sensitivity throughout the required vertical and horizontal angles, a set of constant footcandle curves are made at “dim” sensitivities of 17, 25, and 100 cd at 100 ft.

S14.9.3.11.2.3 ***Performance requirements.***

S14.9.3.11.2.3.1 ***Operating limits.***

Test position (degrees)	Dim (cd at 100 ft)	Hold (cd at 100 ft)
H V	Adjust to 15	1.5 min to 3.75 max.
H 2L	25 max	1.5 min.
H 4L	40 max	1.5 min.
H 6L	75 max	1.5 min.
H 2R	25 max	1.5 min.
H 5R	150 max to 40 min	1.5 min.
1D V	30 max	1.5 min.
1U V	30 max	1.5 min.

S14.9.3.11.2.3.2 There must be no sensitivity voids shown in the constant footcandle curves within the area limited by the test positions.

S14.9.3.11.3 ***Voltage regulation test.***

S14.9.3.11.3.1 ***Procedure.***

S14.9.3.11.3.1.1 The sensitivity of the sample device is adjusted so that it complies with the sensitivity test.

S14.9.3.11.3.1.2 The “dim” sensitivity is measured at the H–V test position at 11 volts input to the device and at 15 volts input to the device.

S14.9.3.11.3.2 ***Performance requirements.*** The device must switch to the lower beam mode at between 8 (cd at 100 ft) and 25 (cd at 100 ft) with the input voltage at 11 volts and at 15 volts.

S14.9.3.11.4 ***Manual override test.***

S14.9.3.11.4.1 ***Procedure.***

S14.9.3.11.4.1.1 The sensitivity of the sample device is adjusted so that it complies with the sensitivity test.

S14.9.3.11.4.1.2 The device is exposed to a test light that causes it to switch to the lower beam mode.

S14.9.3.11.4.1.3 The manufacturer's instructions are followed to cause the device to override the test light and switch to upper beam.

S14.9.3.11.4.1.4 In a similar manner, the test light is extinguished to cause the device to switch to the upper beam mode.

S14.9.3.11.4.1.5 Again the manufacturer's instructions are followed to cause the device to switch to lower beam.

S14.9.3.11.4.2 ***Performance requirements.*** The device, when operated in accordance with the manufacturer's instructions, must switch to the opposite beam with the test light energized and with the test light extinguished.

S14.9.3.11.5 ***Warmup test.***

S14.9.3.11.5.1 ***Procedure.***

S14.9.3.11.5.1.1 The sensitivity of the sample device is adjusted so that it complies with the sensitivity test and the test lamp extinguished.

S14.9.3.11.5.1.2 The test lamp will then be energized at a level of 25 (cd at 100 ft) at the H–V position of the device and the time for the device to switch to lower beam is measured.

S14.9.3.11.5.2 ***Performance requirements.*** If the warmup time of the device exceeds 10 seconds it shall maintain the headlamps on lower beam during warmup.

S14.9.3.11.6 ***Temperature test.***

S14.9.3.11.6.1 ***Procedure.***

S14.9.3.11.6.1.1 The sample device is exposed for 1 hour in a temperature corresponding to that at the device mounting location.

S14.9.3.11.6.1.2 For a device mounted in the passenger compartment or the engine compartment, the temperature is 210 °F, mounted elsewhere, the temperature is 150 °F.

S14.9.3.11.6.1.3 After this exposure the H–V “dim” sensitivity of the sample device is measured over the temperature range of −30 °F to + 100 °F.

S14.9.3.11.6.2 ***Performance requirements.*** The device must switch to the lower beam mode between 8 (cd at 100 ft) and 25 (cd at 100 ft) over the temperature range of −30 °F to + 100 °F.

S14.9.3.11.7 ***Dust test.***

S14.9.3.11.7.1 ***Procedure.***

S14.9.3.11.7.1.1 The sensitivity of the sample device is adjusted so that it complies with the sensitivity test.

S14.9.3.11.7.1.2 The device is then subjected to the dust test of S14.5.3.

S14.9.3.11.7.1.3 At the conclusion of the dust exposure the lens of the device must be wiped clean and the H–V "dim" sensitivity of the sample device is measured.

S14.9.3.11.7.2 ***Performance requirements.*** The device must switch to the lower beam mode between 8 (cd at 100 ft) and 25 (cd at 100 ft).

S14.9.3.11.8 ***Corrosion test.***

S14.9.3.11.8.1 ***Procedure.***

S14.9.3.11.8.1.1 The sensitivity of the sample device is adjusted so that it complies with the sensitivity test.

S14.9.3.11.8.1.2 All system components located outside the passenger compartment must be subjected to the corrosion test of S14.5.4 with the device not operating.

S14.9.3.11.8.1.3 Water is not permitted to accumulate on any connector socket.

S14.9.3.11.8.1.4 At the conclusion of the test the H–V "dim" sensitivity of the sample device must be measured.

S14.9.3.11.8.2 ***Performance requirements.*** The sample device must switch to the lower beam mode between 8 (cd at 100 ft) and 25 (cd at 100 ft).

S14.9.3.11.9 ***Vibration test.***

S14.9.3.11.9.1 ***Procedure.***

S14.9.3.11.9.1.1 The sensitivity of the sample device is adjusted so that it complies with the sensitivity test and the mechanical aim of the photounit determined.

S14.9.3.11.9.1.2 The sample device must be mounted in proper vehicle position and subjected to vibration of 5g constant acceleration for $^{1}/_{2}$ hour in each of three directions: vertical; horizontal and parallel to the vehicle longitudinal axis; and horizontal and normal to the vehicle longitudinal axis.

S14.9.3.11.9.1.3 The vibration frequency must be varied from 30 to 200 and back to 30 cycles per second over a period of approximately 1 minute.

S14.9.3.11.9.1.4 The device must be operating during the test.

S14.9.3.11.9.1.5 At the conclusion of the test the H–V "dim" sensitivity of the sample device and the mechanical aim of the photounit must be measured.

S14.9.3.11.9.2 ***Performance requirements.***

S14.9.3.11.9.2.1 The sample device must switch to the lower beam mode between 8 (cd at 100 ft) and 25 (cd at 100 ft).

S14.9.3.11.9.2.2 The mechanical aim of the device photounit must not have changed by more than 0.25° from the initial value.

S14.9.3.11.10 ***Sunlight test.***

S14.9.3.11.10.1 ***Procedure.***

S14.9.3.11.10.1.1 The sample device must be exposed for 1 hour in bright noonday sunlight (5000 fc minimum illumination with a clear sky) with the photounit aimed as it would be in service and facing an unobstructed portion of the horizon in the direction of the sun.

S14.9.3.11.10.1.2 The device must then be rested for 1 hour in normal room light at room temperature and the H–V "dim" sensitivity of the sample device is measured.

S14.9.3.11.10.2 ***Performance requirements.*** The sample device must switch to the lower beam mode between 8 (cd at 100 ft) and 25 (cd at 100 ft).

S14.9.3.11.11 ***Durability test.***

S14.9.3.11.11.1 ***Procedure.***

S14.9.3.11.11.1.1 The sensitivity of the sample device is adjusted so that it complies with the sensitivity test.

S14.9.3.11.11.1.2 The device photounit operated at a 13.0 input voltage on a cycle of 90 minutes on and 30 minutes off must be activated by a 60 cd light source at 100 ft, or equivalent, which is cycled on and off 4 times per minute for a period of 200 hours.

S14.9.3.11.11.1.3 The device must then rest for 2 hours in a lighted area of 50 to 150 fc after which the H–V "dim" sensitivity must be measured.

S14.9.3.11.11.2 ***Performance requirements.*** The sample device must switch to the lower beam mode between 8 (cd at 100 ft) and 25 (cd at 100 ft).

S14.9.3.11.12 ***Return to upper beam test.***

S14.9.3.11.12.1 ***Procedure.***

S14.9.3.11.12.1.1 The sensitivity of the sample device is adjusted so that it complies with the sensitivity test.

S14.9.3.11.12.1.2 The lens of the photounit must be exposed to light of 100 fc for 10 seconds.

S14.9.3.11.12.2 ***Performance requirements.*** The sample device must switch to upper beam mode within 2 seconds after the 100 fc light is extinguished.

S14.9.3.12 ***Test for compliance with adaptive driving beam photometry requirements.***

S14.9.3.12.1 ***Test scenarios.***

S14.9.3.12.1.1 Any of the scenarios specified in Table XXII and Figures 27, 28, 29, and 30 may be tested. Where a range of values is specified, the vehicle shall be able to meet the requirements at all values within the range.

S14.9.3.12.1.2 Any speed that conforms to the speeds specified for that test scenario will be selected for the test vehicle. The vehicle will achieve and maintain this speed ± 0.45 m/s (1 mph) prior to reaching, and then throughout, the measurement distance range specified for that scenario. Once the test speed is achieved and maintained, no sudden steering inputs, acceleration, braking, or anything that causes a change in vehicle pitch that affects the results of the test shall occur.

S14.9.3.12.1.3 For test scenarios involving curves, any radius within the allowable range specified for that test scenario may be selected. The curve shall nominally consist of a constant radius path and be referenced to the headlighting system midpoint. The actual path of the test vehicle shall not deviate from the nominal path by more than ± 0.5 m throughout the measurement distance range.

S14.9.3.12.1.4 The test vehicle shall be driven within the lane and will not change lanes.

S14.9.3.12.1.5 The measurement distance is the linear distance measured from the headlighting system midpoint to the most forward point of the relevant photometric receptor head mounted on the test fixture.

S14.9.3.12.1.6 The illuminance values for each photometer, the instantaneous pitch of the test vehicle, and the measurement distance shall be recorded and synchronized throughout the measurement distance range specified for that scenario.

S14.9.3.12.2 ***Compliance criteria.*** The maximum calculated illuminance for each measurement distance interval specified in Table XXI that is applicable to the scenario being tested, as determined according to S14.9.3.12.2.1, shall not exceed the applicable maximum illuminance listed in Table XXI.

S14.9.3.12.2.1 The maximum calculated illuminance for each measurement distance interval specified in Table XXI that is applicable to the scenario being tested will be the highest illuminance recorded in that distance interval, excluding any illuminance value(s) that meet any of the following conditions:

(a) A single illuminance value exceeding the applicable maximum illuminance in Table XXI (*i.e.,* the illuminance value is not immediately preceded or followed by an illuminance value exceeding the applicable maximum illuminance); or

(b) consecutive illuminance values occurring over a span of no more than 0.1 seconds exceeding the applicable maximum illuminance in Table XXI; or

(c) any illuminance values collected while the vehicle pitch exceeds the average pitch recorded throughout the entire measurement distance range specified for that scenario in Table XXII by more than 0.3 degrees.

S14.9.3.12.3 ***Stimulus test fixtures.*** Testing shall be conducted using the stimulus test fixtures specified in this section and Figures 23 through 26.

S14.9.3.12.3.1 ***Headlamps.*** The headlamps specified in Fig. 23 (Opposite Direction Car/Truck) shall be a right- and left-hand 2018 Ford F–150 Halogen headlamp (part # KL3Z13008C KL3Z13008D) using any replaceable light source designated for use in the system and, separately, a right- and left-hand 2018 Toyota Camry LED headlamp (part # 8111006C40/8115006C40). The headlamps specified in Fig. 25 (Opposite Direction Motorcycle) shall be a 5.75-inch round headlamp kit from a 2018 Harley Davidson Sportster (part #68297–05B) using an HB2 replaceable light source. Each headlamp shall energize the lower beam only, powered at 12.8 volts DC ± 500 mV when measured at the lamp terminals, and shall have been energized for a minimum of 5 minutes before each test trial. The measurement locations specified in Figures 23 and 25 shall be measured to the optical axis marking of the headlamps.

S14.9.3.12.3.2 ***Taillamps.*** The taillamps specified in Fig. 24 (Same Direction Car/Truck) shall be a right and left-hand 2018 Ford F–150 incandescent rear combination lamp (part # JL3Z13405H/JL3Z13404H) and, separately, a right and left-hand 2018 Toyota Camry rear combination lamp (part # 81550–06730/81560–06730). The taillamps specified in Fig. 26 (Same Direction Motorcycle) shall be a 2018 Harley Davidson Roadster layback LED taillamp assembly (part #67800355). The taillamps shall be powered at 12.8 volts DC ± 500 mV when measured at the lamp terminals and shall have been energized for a minimum of 5 minutes before each test trial. The measurement locations specified in Figures 24 and 26 shall be measured to the center of the taillamp.

S14.9.3.12.3.3 ***Photometers.*** Photometers must be capable of a minimum measurement unit of 0.01 lux. The color response of the photometer must be corrected to that of the 1931 CIE Standard Observer (2-degree) Photopic Response Curve, as shown in the CIE 1931 Chromaticity Diagram (incorporated by reference, see § 571.5), with a cosine correction characteristic within 3%. The photometer lenses on the test fixture shall be clean and free from dirt and debris, and the photometers will be zero-calibrated for each test to account for ambient light. The illuminance values from the photometers shall be collected at a rate of at least 100 Hz and a maximum 25-degree angle of incidence.

S14.9.3.12.3.4 The projection of the fixture lamp's optical axis onto the road surface shall be parallel to a tangent of the road edge at the location of the photometer.

S14.9.3.12.3.5 The test fixture shall be centered in the lane.

S14.9.3.12.4 ***Test vehicle preparation.***

S14.9.3.12.4.1 Tires on the test vehicle shall be inflated to the manufacturer's recommended cold inflation pressure ± 7 kPa (1 psi). If more than one recommendation is provided, the tires are inflated to the cold inflation pressure ± 7 kPa (1 psi) that corresponds to the lowest loaded condition listed.

S14.9.3.12.4.2 Before initiating testing, if the test vehicle is equipped with a fuel tank it shall be filled to approximately 100% of capacity with the appropriate fuel and maintained to at least 75% capacity throughout the testing.

S14.9.3.12.4.3 Headlamps on the test vehicle shall be aimed according to the vehicle manufacturer's instructions. The test vehicle shall be loaded within ± 5 kg of the total vehicle weight during track testing prior to aiming the adaptive driving beam headlamps.

S14.9.3.12.4.4 The adaptive driving beam system shall be adjusted according to the manufacturer's instructions.

S14.9.3.12.4.5 To the extent practicable, adaptive driving beam system sensors and the windshield on the test vehicle (if an adaptive driving beam system sensor is behind the windshield) shall be clean and free of dirt and debris.

S14.9.3.12.4.6 The headlamp lenses of the test vehicle shall be clean and free from dirt and debris.

S14.9.3.12.4.7 The adaptive driving beam system shall be activated according to the manufacturer's instructions and all other independently controlled lamps, such as fog lamps, shall be turned off.

S14.9.3.12.5 *Test road*

S14.9.3.12.5.1 The test road shall have a longitudinal grade (slope) that does not exceed 2%.

S14.9.3.12.5.2 The lane width shall be any width from 3.05 m (10 ft) to 3.66 m (12 ft).

S14.9.3.12.5.3 The lanes shall be adjacent to one another.

S14.9.3.12.5.4 The tests are conducted on a uniform, solid-paved surface.

S14.9.3.12.5.5 The test road surface may be concrete or asphalt and shall not be bright white.

S14.9.3.12.5.6 The test road surface may have pavement markings but shall be free of retroreflective material or elements that affect the outcome of the test.

S14.9.3.12.6 *Other test parameters and conditions*

S14.9.3.12.6.1 Testing shall be conducted on dry pavement and with no precipitation.

S14.9.3.12.6.2 Testing shall be conducted when the ambient illumination at the test road as recorded by the photometers is at or below 0.2 lux.

S14.9.3.12.6.3 Photometer data signals shall be passed through a low-pass filter with a cutoff frequency of 35 Hz.

Table I–a—Required Lamps and Reflective Devices

Lighting device	Number and color	Mounting location	Mounting height	Device activation
All Passenger Cars, Multipurpose Passenger Vehicles (MPV), Trucks, and Buses				

Lighting device	Number and color	Mounting location	Mounting height	Device activation
Lower Beam Headlamps	White, of a headlighting system listed in Table II	On the front, at the same height, symmetrically about the vertical centerline, as far apart as practicable	Not less than 55.9 cm nor more than 137.2 cm	The wiring harness or connector assembly of each headlighting system must be designed so that only those light sources intended for meeting lower beam photometrics are energized when the beam selector switch is in the lower beam position, and that only those light sources intended for meeting upper beam photometrics are energized when the beam selector switch is in the upper beam position, except for certain systems listed in Table II and semiautomatic headlamp beam switching devices certified to S9.4.1.6. Steady burning, except that may be flashed for signaling purposes or (for semiautomatic headlamp beam switching devices certified to S9.4.1.6) vary in intensity for adaptive driving beam functionality.
Upper Beam Headlamps	White, of a headlighting system listed in Table II	On the front, at the same height, symmetrically about the vertical centerline, as far apart as practicable	Not less than 22 inches (55.9 cm) nor more than 54 inches (137.2 cm)	

Lighting device	Number and color	Mounting location	Mounting height	Device activation
Turn Signal Lamps	2 Amber	At or near the front, at the same height, symmetrically about the vertical centerline, as far apart as practicable	Not less than 15 inches, nor more than 83 inches	Flash when the turn signal flasher is actuated by the turn signal operating unit.
	2 Amber or red Truck tractor exception, see S6.1.1.3	On the rear, at the same height, symmetrically about the vertical centerline, as far apart as practicable		
Taillamps	2 Red	On the rear, at the same height, symmetrically about the vertical centerline, as far apart as practicable	Not less than 15 inches, nor more than 72 inches	Steady burning. Must be activated when the headlamps are activated in a steady burning state or the parking lamps on passenger cars and MPVs, trucks, and buses less than 80 inches in overall width are activated. May be activated when the headlamps are activated at less than full intensity as Daytime Running Lamps (DRL).
Stop Lamps	2 Red	On the rear, at the same height, symmetrically about the vertical centerline, as far apart as practicable	Not less than 15 inches, nor more than 72 inches	Steady burning. Must be activated upon application of the service brakes. When optically combined with a turn signal lamp, the circuit must be such that the stop signal cannot be activated if the turn signal lamp is flashing. May also be activated

Lighting device	Number and color	Mounting location	Mounting height	Device activation
				by a device designed to retard the motion of the vehicle.
Side Marker Lamps	2 Amber	On each side as far to the front as practicable	Not less than 15 inches	Steady burning except may be flashed for signaling purposes. Must be activated when the headlamps are activated in a steady burning state or the parking lamps on passenger cars and MPVs, trucks, and buses less than 80 inches in overall width are activated.
	2 Red (not required on truck tractor).	On each side as far to the rear as practicable		
Reflex Reflectors	2 Amber	On each side as far to the front as practicable	Not less than 15 inches, nor more than 60 inches	Not applicable.
	2 Red (not required on truck tractor).	On each side as far to the rear as practicable		
	2 Red	On the rear, at the same height, symmetrically about the vertical centerline, as far apart as practicable On a truck tractor may be mounted on the back of the cab not less than 4 inches above the height of		

Lighting device	Number and color	Mounting location	Mounting height	Device activation
		the rear tires.		
Backup Lamp	1 White Additional lamps permitted to meet requirements	On the rear	No requirement	Steady burning. Must be activated when the ignition switch is energized and reverse gear is engaged. Must not be energized when the vehicle is in forward motion.
License Plate Lamp	1 White Additional lamps permitted to meet requirements	On the rear to illuminate license plate from top or sides	No requirement	Steady burning. Must be activated when the headlamps are activated in a steady burning state or when the parking lamps on passenger cars and MPVs, trucks, and buses less than 80 inches in overall width are activated.
Additional Lamps Required on All Passenger Cars, and on Multipurpose Passenger Vehicles (MPV), Trucks, and Buses, Less Than 2032 MM in Overall Width				
Parking lamps	2 Amber or white	On the front, at the same height, symmetrically about the vertical centerline, as far apart as practicable	Not less than 15 inches, nor more than 72 inches	Steady burning. Must be activated when the headlamps are activated in a steady burning state.
Additional Lamp(s) Required on All Passenger Cars, and on Multipurpose Passenger Vehicles (MPV), Trucks, and Buses, Less Than 2032 MM in Overall Width and With a GVWR of 10,000 Lbs or Less				
High mounted stop lamp	1 Red, or 2 red where exceptions apply. See Section 6.1.1.2	On the rear including glazing, with the lamp center on the vertical centerline as viewed from the rear	Not less than 34 inches except for passenger cars. See Section 6.1.4.1	Steady burning. Must only be activated upon application of the service brakes or may be activated by a device designed to retard the motion of the vehicle.
Additional Lamps and Reflective Devices Required on All Passenger Cars, Multipurpose Passenger Vehicles (MPV), Trucks, and Buses, 30 Feet or Longer				

Lighting device	Number and color	Mounting location	Mounting height	Device activation
Intermediate side marker lamps	2 Amber	On each side located at or near the midpoint between the front and rear side marker lamps	Not less than 15 inches	Steady burning except may be flashed for signaling purposes. Must be activated when the headlamps are activated in a steady burning state or when the parking lamps on passenger cars and MPVs, trucks, and buses less than 80 inches in overall width are activated.
Intermediate side reflex reflectors	2 Amber	On each side located at or near the midpoint between the front and rear side reflex reflectors	Not less than 15 inches, nor more than 60 inches	Not applicable.
Additional Lamps Required on All Multipurpose Passenger Vehicles (MPV), Trucks, and Buses, 2032 MM or More in Overall Width				
Clearance lamps	2 Amber	On the front to indicate the overall width of the vehicle, or width of cab on truck tractor, at the same height, symmetrically about the vertical centerline May be located at a location other than the front if necessary to indicate the overall width of the vehicle, or for protection	As near the top as practicable	Steady burning.

Lighting device	Number and color	Mounting location	Mounting height	Device activation
		from damage during normal operation of the vehicle.		
	2 Red (not required on truck tractor)	On the rear to indicate the overall width of the vehicle, at the same height, symmetrically about the vertical centerline May be located at a location other than the rear if necessary to indicate the overall width of the vehicle, or for protection from damage during normal operation of the vehicle.	As near the top as practicable, except where the rear identification lamps are mounted at the extreme height of the vehicle. Practicability of locating lamps on the vehicle header is presumed when the header extends at least 25 mm (1 inch) above the rear doors.	Steady burning.
Identification lamps	3 Amber	On the front, at the same height, as close as practicable to the vertical centerline, with lamp centers spaced not less than 6 inches or more than 12 inches apart	As near the top of the vehicle or top of the cab as practicable	Steady burning.
	3 Red (not required on truck tractor)	On the rear, at the same height, as	As near the top as practicable	Steady burning.

Lighting device	Number and color	Mounting location	Mounting height	Device activation
		close as practicable to the vertical centerline, with lamp centers spaced not less than 6 inches or more than 12 inches apart	Practicability of locating lamps on the vehicle header is presumed when the header extends at least 25 mm (1 inch) above the rear doors.	
Additional Lamps Required on All School Buses Except Multifunction School Activity Buses				
Signal warning lamps	2 Red plus 2 amber optional	On the front of the cab as far apart as practicable, but in no case shall the spacing between lamps be less than 40 inches Amber lamps, when installed, at the same height as and just inboard of the red lamp.	As high as practicable but at least above the windshield	Flashing alternately between 60 to 120 cycles per minute, with an activation period sufficient to allow the lamp to reach full brightness, when actuated by a manual switch. Amber lamps, when installed, may only be activated by manual or foot operation, and must be automatically deactivated and the red lamps must be automatically activated when the bus entrance door is opened.
	2 Red plus 2 amber optional	On the rear cab as far apart as practicable, but in no case shall the spacing between lamps be less than 40 inches Amber lamps,	As high as practicable but at least above the top of any side window opening	Flashing alternately between 60 to 120 cycles per minute, with an activation period sufficient to allow the lamp to reach full brightness, when actuated by a manual switch. Amber lamps, when installed, may only be activated by manual or

Lighting device	Number and color	Mounting location	Mounting height	Device activation
		when installed, at the same height as and just inboard of the red lamp.		foot operation, and must be automatically deactivated and the red lamps must be automatically activated when the bus entrance door is opened.
Daytime Running Lamps Permitted But Not Required on Passenger Cars, Multipurpose Passenger Vehicles (MPV), Trucks, and Buses				
Daytime running lamp (DRL)	2 identically colored either white, white to yellow, white to selective yellow, selective yellow, or yellow	On the front, symmetrically disposed about the vertical centerline if not a pair of lamps required by this standard or if not optically combined with a pair of lamps required by this standard	Not more than 1.067 meters above the road surface if not a pair of lamps required by this standard or if not optically combined with a pair of lamps required by this standard See S7.10.13(b) for additional height limitation.	Steady burning. Automatically activated as determined by the vehicle manufacturer and automatically deactivated when the headlamp control is in any “on” position. Each DRL optically combined with a turn signal lamp must be automatically deactivated as a DRL when the turn signal lamp or hazard warning lamp is activated, and automatically reactivated as a DRL when the turn signal lamp or hazard warning lamp is deactivated. See S7.10.10.1(c) for additional activation requirements when mounted close to, or combined with, a turn signal lamp.

Table I–b—Required Lamps and Reflective Devices

Lighting device	Number and color	Mounting location	Mounting height	Device activation
ALL TRAILERS				
Turn Signal Lamps	2 Red or amber	On the rear, at the same height, symmetrically about	Not less than 15 inches, nor more than 83	Flash when the turn signal

Lighting device	Number and color	Mounting location	Mounting height	Device activation
		the vertical centerline, as far apart as practicable	inches	flasher is actuated by the turn signal operating unit.
Taillamps	2 Red or 1 red on trailers less than 30 inches wide	On the rear, at the same height, symmetrically about the vertical centerline, as far apart as practicable. When a single lamp is installed it must be mounted at or near the vertical centerline	Not less than 15 inches, nor more than 72 inches	Steady burning.
Stop Lamps	2 Red, or 1 red on trailers less than 30 inches wide	On the rear, at the same height, symmetrically about the vertical centerline, as far apart as practicable. When a single lamp is installed it must be mounted at or near the vertical centerline	Not less than 15 inches, nor more than 72 inches	Steady burning. Must be activated upon application of the service brakes. When optically combined with a turn signal lamp, the circuit must be such that the stop signal cannot be activated if the turn signal lamp is flashing. May also be activated by a device designed to retard the motion of the vehicle.

Lighting device	Number and color	Mounting location	Mounting height	Device activation
Side Marker Lamps	2 Amber None required on trailers less than 1829 mm [6 ft] in overall length including the trailer tongue	On each side as far to the front as practicable exclusive of the trailer tongue	Not less than 15 inches	Steady burning except may be flashed for signaling purposes.
	2 Red	On each side as far to the rear as practicable	Not less than 15 inches. Not more than 60 inches on trailers 2032 mm or more in overall width	
Reflex Reflectors. A trailer equipped with a conspicuity treatment in conformance with S8.2 of this standard need not be equipped with reflex reflectors if the conspicuity material is placed at the locations of the required reflex reflectors	2 Amber None required on trailers less than 1829 mm [6 ft] in overall length including the trailer tongue	On each side as far to the front as practicable exclusive of the trailer tongue	Not less than 15 inches, nor more than 60 inches	Not applicable.
	2 Red	On each side as far to the rear as practicable		
	2 Red or 1 red on trailers less than 30 inches wide	On the rear, at the same height, symmetrically about the vertical centerline, as far apart as		

Lighting device	Number and color	Mounting location	Mounting height	Device activation
		practicable When a single reflector is installed it must be mounted at or near the vertical centerline.		
License Plate Lamp	1 White Additional lamps permitted to meet requirements	On the rear to illuminate license plate from top or sides	No requirement	Steady burning.
Additional Lamps and Reflective Devices Required on all Trailers 30 Feet or Longer				
Intermediate side marker lamps	2 Amber	On each side located at or near the midpoint between the front and rear side marker lamps	Not less than 15 inches	Steady burning except may be flashed for signaling purposes.
Intermediate side reflex reflectors A trailer equipped with a conspicuity treatment in conformance with S8.2 of this standard need not be equipped with reflex reflectors if the conspicuity material is placed at the locations of the required reflex reflectors	2 Amber	On each side located at or near the midpoint between the front and rear side reflex reflectors	Not less than 15 inches, nor more than 60 inches	Not applicable.
Additional Lamps Required on all Trailers 2032 MM or More in Overall Width				
Clearance lamps	2 Amber	On the front to indicate the overall width of the vehicle, at	As near the top as practicable	Steady burning.

Lighting device	Number and color	Mounting location	Mounting height	Device activation
		the same height, symmetrically about the vertical centerline May be located at a location other than the front if necessary to indicate the overall width of the vehicle, or for protection from damage during normal operation of the vehicle		
	2 Red	On the rear to indicate the overall width of the vehicle, at the same height, symmetrically about the vertical centerline May be located at a location other than the rear if necessary to indicate the overall width of the vehicle, or for protection from damage during normal operation of the vehicle	As near the top as practicable, except where the rear identification lamps are mounted at the extreme height of the vehicle. Practicability of locating lamps on the vehicle header is presumed when the header extends at least 25 mm (1 inch) above the rear doors	Steady burning.
	2 Amber to front and red to rear	On a boat trailer the requirement for front and rear clearance lamps may be met by installation at or near the midpoint on each side of a dual facing lamp so as to indicate the extreme width. May be located at a location other than the front and the rear if	As near the top as practicable	Steady burning.

Lighting device	Number and color	Mounting location	Mounting height	Device activation
		necessary to indicate the overall width of the vehicle, or for protection from damage during normal operation of the vehicle		
Identification lamps	3 Red	On the rear, at the same height, as close as practicable to the vertical centerline, with lamp centers spaced not less than 6 inches or more than 12 inches apart	As near the top as practicable Practicability of locating lamps on the vehicle header is presumed when the header extends at least 25 mm (1 inch) above the rear doors	Steady burning.

Table I–c—Required Lamps and Reflective Devices

Lighting device	Number and color	Mounting location	Mounting height	Device activation
All Motorcycles				
Lower Beam Headlamps	White, of a headlighting system listed in S10.17	On the front, at the same height, symmetrically about the vertical centerline, as far apart as practicable. See additional requirements in S10.17.1.1, S10.17.1.2, and S10.17.1.3	Not less than 22 inches (55.9 cm) nor more than 54 inches (137.2 cm)	The wiring harness or connector assembly of each headlighting system must be designed so that only those light sources intended for meeting lower beam photometrics are energized when the beam selector switch is in the lower beam position, and that only those light sources intended for meeting upper beam photometrics are energized when the beam selector switch is in the upper beam position, except for certain systems listed in Table II and

Lighting device	Number and color	Mounting location	Mounting height	Device activation
				semiautomatic headlamp beam switching devices certified to S9.4.1.6. Steady burning, except that may be flashed for signaling purposes or (for semiautomatic headlamp beam switching devices certified to S9.4.1.6) vary in intensity for adaptive driving beam functionality. The upper beam or the lower beam, but not both, may be wired to modulate from a higher intensity to a lower intensity in accordance with S10.17.5.
Upper Beam Headlamps	White, of a headlighting system listed in S10.17	On the front, at the same height, symmetrically about the vertical centerline, as far apart as practicable. See additional requirements in S10.17.1.1, S10.17.1.2, and S10.17.1.3	Not less than 55.9 cm nor more than 137.2 cm	
				The upper beam or the lower beam, but not both, may be wired to modulate from a higher intensity to a lower intensity in accordance with S10.17.5
Turn Signal Lamps	2 Amber. None required on a motor driven cycle whose speed attainable in	At or near the front, at the same height, symmetrically about the vertical centerline,	Not less than 15 inches, nor more than 83 inches	Flash when the turn signal flasher is actuated by the turn signal operating unit.

Lighting device	Number and color	Mounting location	Mounting height	Device activation
	1 mile is 30 mph or less	and having a minimum horizontal separation distance (centerline of lamps) of 16 inches. Minimum edge to edge separation distance between a turn signal lamp and headlamp is 4 inches		
	2 Amber or red. None required on a motor driven cycle whose speed attainable in 1 mile is 30 mph or less	At or near the rear, at the same height, symmetrically about the vertical centerline, and having a minimum horizontal separation distance (centerline to centerline of lamps) of 9 inches		
		Minimum edge to edge separation distance between the turn signal lamp and the taillamp or stop lamp is 4 inches, when a single stop and taillamp is		

Lighting device	Number and color	Mounting location	Mounting height	Device activation
		installed on the vertical centerline and the turn signal lamps are red		
Taillamps	1 Red	On the rear, on the vertical centerline except that if two are used, they must be symmetrically disposed about the vertical centerline	Not less than 15 inches, nor more than 72 inches	Steady burning.
				Must be activated when the headlamps are activated in a steady burning state.
Stop Lamps	1 Red	On the rear, on the vertical centerline except that if two are used, they must be symmetrically disposed about the vertical centerline	Not less than 15 inches, nor more than 72 inches	Steady burning.
				Must be activated upon application of the service brakes.
				When optically combined with a turn signal lamp, the circuit must be such that the stop signal cannot be activated if the turn signal lamp is flashing. May also be activated by a device designed to retard the motion of the vehicle.

Lighting device	Number and color	Mounting location	Mounting height	Device activation
Reflex Reflectors	2 Amber	On each side as far to the front as practicable	Not less than 15 inches, nor more than 60 inches	Not applicable.
	2 Red	On each side as far to the rear as practicable		
	1 Red	On the rear, on the vertical centerline except that, if two are used on the rear, they must be symmetrically disposed about the vertical centerline		
License Plate Lamp	1 White	On the rear to illuminate license plate	No requirement	Steady burning.
	Additional lamps permitted to meet requirements			Must be activated when the headlamps are activated in a steady burning state.

LED BEAMS

OMPOSITION	PHOTOMETRY REQUIREMENTS REFERENCE			MAXIMUM FILAMENT POWER AT 12.8 V	
	TABLE XVIII	TABLES XIX-A, XIX-b, XIX-c			
	UPPER BEAM MECHANICAL AND VISUAL AIM	LOWER BEAM MECH AIM	LOWER BEAM VISUAL AIM	UPPER BEAM	LOWER BEAM
ILAMENT	UB4	N.A.	N.A.	55	N.A.
B FILAMENTS	UB5	LB4M	LB2V	43	65
B FILAMENTS	UB3	LB3M	LB3V	70	60
ILAMENT	UB4	N.A.	N.A.	55	N.A.
B FILAMENTS	UB5	LB4M	LB2V	43	65
B FILAMENTS	UB3	LB3M	LB3V	65	55
B FILAMENTS	UB3	LB3M	LB3V	70	60
ILAMENT	UB1	N.A.	N.A.	70	N.A.
ILAMENT	N.A[1]	LB1M[1]	LB1V[1]	N.A.	60
ILAMENT	UB4	N.A.	N.A.	55	N.A.
B FILAMENTS	UB5	LB4M	LB2V	43	65
B FILAMENTS	UB3	LB3M	LB3V	70	60

ps marked "UF" are activated.

ating and aiming planes to permit simultaneous aiming with restrictions. See S10.13.2.

Table II–b—Headlighting Systems—Combination

System designation	System composition	Photometry requirements reference		
		Table XVIII	Tables XIX–a, XIX–b, XIX–c	
		Upper beam mechanical and visual aim	Lower beam mech aim	Lower beam visual aim
2 LAMP SYSTEM	A COMBINATION OF TWO DIFFERENT HEADLAMPS CHOSEN FROM; TYPE F, AN INTEGRAL BEAM HEADLAMP, OR A REPLACEABLE BULB HEADLAMP	UB2[(1)]	LB2M[(1)]	LB2V[(1)]
4 LAMP SYSTEM	ANY COMBINATION OF FOUR DIFFERENT HEADLAMPS CHOSEN FROM; TYPE F, AN INTEGRAL BEAM HEADLAMP[(3)], OR A REPLACEABLE BULB HEADLAMP	UB1	LB1M[(2)]	LB1V[(2)]

[(1)] Headlamps designed to conform to the photometry requirements of UB2 and LB2M or LB2V may allow the lower beam light source(s) to remain activated when an upper beam light source is activated if the lower beam light source(s) contribute to upper beam photometric compliance.

[(2)] Lower beams may remain activated when upper beams are activated.

[(3)] Beam contributor photometric allocation formula of S14.2.5.9 may apply.

Table II–c—Headlighting Systems—Integral Beams

System designation	Beam composition	Photometry requirements reference		
		Table XVIII	Tables XIX–a, XIX–b, XIX–c	
		Upper beam mechanical and visual aim	Lower beam mech aim	Lower beam visual aim
2 LAMP SYSTEM	UPPER BEAM & LOWER BEAM	UB2[1] OR UB3	LB2M[1] OR LB3M	LB2V[1] OR LB3V
4 LAMP SYSTEM	UPPER BEAM	UB4	N.A.	N.A.
	UPPER BEAM & LOWER BEAM	UB5	LB4M	LB2V
4 LAMP SYSTEM	UPPER BEAM (U)	UB1	N.A.	N.A.
	LOWER BEAM (L)	N.A.[2]	LB1M[2]	LB1V[2]
4 LAMP SYSTEM	UPPER BEAM	UB6	N.A.	N.A.
	LOWER BEAM	N.A.[3]	LB5M[3]	LB4V[3]
BEAM CONTRIBUTOR	UPPER BEAM & LOWER BEAM	UB1[4]	LB1M[2][4]	LB1V[2][4]

[1] Headlamps designed to conform to the photometry requirements of UB2 and LB2M or LB2V may allow the lower beam light source(s) to remain activated when an upper beam light source is activated if the lower beam light source(s) contribute to upper beam photometric compliance.

[2] Lower beams may remain activated when upper beams are activated.

[3] Lower beams must remain activated when upper beams are activated.

[4] Beam contributor photometric allocation formula of S14.2.5.9 applies.

Table II–d—Headlighting Systems—Replaceable Bulb

System designation	Light source composition	Photometry requirements reference		
		Table XVIII	Tables XIX–a, XIX–b, XIX–c	
		Upper beam mechanical and visual aim	Lower beam mech aim	Lower beam visual aim
2 LAMP SYSTEM	ANY DUAL FILAMENT TYPE, OTHER THAN HB2, USED ALONE OR WITH ANOTHER DUAL FILAMENT TYPE OTHER THAN HB2	UB2[1] OR UB3	LB2M[1] OR LB3M	LB2V[1] OR LB3V
2 LAMP SYSTEM	HB2 OR ANY SINGLE FILAMENT TYPE USED ALONE OR WITH ANY OTHER SINGLE OR DUAL FILAMENT	UB2[1] OR UB3	LB2M[1]	LB2V[1]

System designation	Light source composition	Photometry requirements reference		
		Table XVIII	Tables XIX–a, XIX–b, XIX–c	
		Upper beam mechanical and visual aim	Lower beam mech aim	Lower beam visual aim
	TYPE			
4 LAMP SYSTEM	ANY DUAL FILAMENT TYPE, OTHER THAN HB2, USED ALONE OR WITH ANOTHER DUAL FILAMENT TYPE OTHER THAN HB2	UB1[(2)] OR UB3	LB1M[(2)] OR LB3M	LB1V[(2)] OR LB3V
4 LAMP SYSTEM	HB2 OR ANY SINGLE FILAMENT TYPE USED ALONE OR WITH ANY OTHER SINGLE OR DUAL FILAMENT TYPE. (U & L)	UB1[(2)]	LB1M[(2)]	LB1V[(2)]

[(1)] Headlamps designed to conform to the photometry requirements of UB2 and LB2M or LB2V may allow the lower beam light source(s) to remain activated when an upper beam light source is activated if the lower beam light source(s) contribute to upper beam photometric compliance.

[(2)] Lower beams may remain activated when upper beams are activated.

Table III—Marking Requirements Location

Lamp, reflective device, or other component	Marking	Marking location	Requirement
HEADLAMPS, BEAM CONTRIBUTORS, OR HEADLAMP REPLACEABLE LENS			
	“DOT”	Lens	S6.5.1
	Optical axis marking	See requirement	S10.18.5
	Manufacturer name and/or trademark	Lens	S6.5.3
	Voltage	See requirement	S6.5.3
	Part number or trade number	See requirement	S6.5.3
HEADLAMP REPLACEABLE LENS	Manufacturer identification	Lens	S6.5.3
	Headlamp identification		
REPLACEABLE BULB HEADLAMPS	“U” or “L” (4 lamp system)	Lens	S10.15.4
	Replaceable bulb type	Lens	S6.5.3.4
SEALED BEAM HEADLAMPS	“sealed beam”	Lens	S6.5.3.3

Lamp, reflective device, or other component	Marking	Marking location	Requirement
	Type designation	See requirements	S6.5.3.3
INTEGRAL BEAM HEADLAMPS	“U” or “L” (4 lamp system)	Lens	S10.14.4
MOTORCYCLE REPLACEABLE BULB HEADLAMPS	“motorcycle”	Lens	S10.17.2
VISUALLY/OPTICALLY AIMED HEADLAMPS	“VOR” or “VOL” or “VO”	Lens	S10.18.9.6
EXTERNALLY AIMED HEADLAMPS	Aim pad location & “H” or “V“	Lens	S10.18.7.1
VEHICLE HEADLAMP AIMING DEVICES (VHAD)	Aiming scale(s)	See requirement	S10.18.8
(HEADLAMP) REPLACEABLE LIGHT SOURCES	“DOT”	See requirement	S11.1
	Replaceable light source designation	See requirement	
	Manufacturer name and/or trademark	See requirement	
REPLACEABLE LIGHT SOURCE BALLASTS	Manufacturer name or logo	See requirement	S11.2
	Part number		
	Light source identification		
	Rated laboratory life		
	High voltage warning		
	Output in watts and volts		
	“DOT”		
LAMPS (OTHER THAN HEADLAMPS), REFLECTIVE DEVICES, AND ASSOCIATED EQUIPMENT	“DOT”	See requirement	S6.5.1.2
DAYTIME RUNNING LAMPS (DRL)	“DRL”	Lens	S6.5.2
CONSPICUITY REFLEX REFLECTORS	“DOT–C”	Exposed surface	S8.2.2.1
RETROREFLECTIVE SHEETING	“DOT–C2” or “DOT–C3” or “DOT–C4”	Exposed surface	S8.2.1.3

Table IV–a—Effective Projected Luminous Lens Area Requirements

Lighting device	Passenger cars, multipurpose passenger vehicles, trucks, trailers, and buses of less than 2032 mm in overall width minimum effective projected luminous lens area (sq mm)			Multipurpose passenger vehicles, trucks, trailers, and buses 2032 mm or more in overall width minimum effective projected luminous lens area each lamp (sq mm)	Motorcycles minimum effective projected luminous lens area (sq mm)	
	Single compartment lamp	Multiple compartment lamp or multiple lamps			Multiple compartment lamp or multiple lamps	
		Each compartment or lamp	Combined compartments or lamps		Each compartment or lamp	Single or combined compartments or lamps
Front turn signal lamp	2200		2200	7500	2200	2258
Rear turn signal lamp	5000	2200	5000	7500	2200	2258
Stop lamp	5000	2200	5000	7500	2200	[1] 5000

[1] A motor driven cycle whose speed attainable in 1 mile is 30 mph or less may be equipped with a stop lamp whose minimum effective projected luminous lens area is not less than 2258 sq mm.

Table IV–b—Effective Projected Luminous Lens Area Requirements

Lighting device	Passenger cars, multipurpose passenger vehicles, trucks, and buses of less than 2032 mm in overall width and with a GVWR of 10,000 lbs or less using a single lamp minimum effective projected luminous lens area (sq mm)	Multipurpose passenger vehicles, trucks, and buses of less than 2032 mm in overall width and with a GVWR of 10,000 lbs or less using dual lamps of identical size and shape minimum effective projected luminous lens area each lamp (sq mm)
High-mounted stop lamp	2903	1452

Table IV–c—Effective Projected Luminous Lens Area Requirements

Lighting device	School bus minimum effective projected luminous lens area each lamp (sq mm)
School bus signal lamp	12,258

Table V–a—Visibility Requirements of Installed Lighting Devices

Lighting device	Required visibility
Backup lamp	Lamps must be mounted so that the optical center of at least one lamp is visible from any eye point elevation from at least 1828 mm (6 ft) to 610 mm (2 ft) above the horizontal plane on which the vehicle is standing; and from any position in the area, rearward of a vertical plane perpendicular to the longitudinal axis of the vehicle, 914 mm (3 ft), to the rear of the vehicle and extending 914 mm (3 ft) beyond each side of the vehicle.
High-mounted stop lamp	Signal must be visible to the rear through a horizontal angle from 45° to the left to 45° to the right of the longitudinal axis of the vehicle. (Single lamp or two lamps together where required by S6.1.1.2 of this standard).
School bus signal lamp	Signal of front lamps to the front and rear lamps to the rear must be unobstructed within area bounded by 5° up to 10° down and 30° left to 30° right.

Table V–b—Visibility Requirements of Installed Lighting Devices—Lens Area Visibility Option

Lighting device	Corner points[1 2]				Required visibility
	Motorcycle		All other		
Turn signal lamp[3]	15° UP–20° IB	15° UP–45° OB	15° UP–45° IB	15° UP–45° OB	Unobstructed minimum

	15° DOWN–20° IB	15° DOWN–45° OB	15° DOWN–45° IB	15° DOWN–45° OB	effective projected
Stop lamp	15° UP–45° RIGHT[4]	15° UP–45° LEFT[4]	15° UP–45° IB	15° UP–45° OB	luminous lens area
	15° DOWN–45° RIGHT[4]	15° DOWN–45° LEFT[4]	15° DOWN–45° IB	15° DOWN–45° OB	of 1,250 sq mm in any
Taillamp	15° UP–45° RIGHT[5]	15° UP–45° LEFT[5]	15° UP–45° IB	15° UP–45° OB	direction throughout
	15° DOWN–45° RIGHT[5]	15° DOWN–45° LEFT[5]	15° DOWN–45° IB	15° DOWN–45° OB	the pattern defined by
Parking lamp	No Requirement	No Requirement	15° UP–45° IB	15° UP–45° OB	the specified corner
	No Requirement	No Requirement	15° DOWN–45° IB	15° DOWN–45° OB	points.

[1] IB indicates an inboard direction (toward the vehicle's longitudinal centerline) and OB indicates an outboard direction.

[2] Where a lamp is mounted with its axis of reference less than 750 mm above the road surface, the vertical test point angles located below the horizontal plane subject to visibility requirements may be reduced to 5° down.

[3] Where more than one lamp or optical area is lighted at the front on each side of a multipurpose passenger vehicle, truck, trailer, or bus, of 2032 mm or more overall width, only one such area need comply.

[4] If a multiple lamp arrangement is used for a motorcycle stop lamp, the inboard angle for each lamp shall be 10 degrees.

[5] If a multiple lamp arrangement is used for a motorcycle tail lamp, the inboard angle for each lamp shall be 45 degrees.

Table V–c—Visibility Requirements of Installed Lighting Devices—Luminous Intensity Visibility Option

Lighting device	Corner points[1 2]				Required visibility Minimum luminous intensity in any direction throughout the pattern defined by the specified corner points.
	Motorcycle		All Other		Candela
Turn signal	15° UP–20° IB	15° UP–80° OB	15° UP–45° IB	15° UP–80° OB	0.3

lamp					
	15° DOWN–20° IB	15° DOWN–80° OB	15° DOWN–45° IB	15° DOWN–80° OB	
Stop lamp	15° UP–45° RIGHT[4]	15° UP–45° LEFT[4]	15° UP–45° IB	15° UP–45° OB	0.3
	15° DOWN–45° RIGHT[4]	15° DOWN–45° LEFT[4]	15° DOWN–45° IB	15° DOWN–45° OB	
Taillamp[3]	15° UP–80° RIGHT[5]	15° UP–80° LEFT[5]	15° UP–45° IB	15° UP–80° OB	0.05
	15° DOWN–80° RIGHT[5]	15° DOWN–80° LEFT[5]	15° DOWN–45° IB	15° DOWN–80° OB	
Parking lamp	No Requirement	No Requirement	15° UP–45° IB	15° UP–80° OB	0.05
	No Requirement	No Requirement	15° DOWN–45° IB	15° DOWN–80° OB	

[1] IB indicates an inboard direction (toward the vehicle's longitudinal centerline) and OB indicates an outboard direction.

[2] Where a lamp is mounted with its axis of reference less than 750 mm above the road surface, the vertical test point angles located below the horizontal plane subject to visibility requirements may be reduced to 5° down

[3] Inboard and outboard corner points are 80° for a single taillamp installed on a motorcycle

[4] If a multiple lamp arrangement is used for a motorcycle stop lamp, the inboard angle for each lamp shall be 10 degrees.

[5] If a multiple lamp arrangement is used for a motorcycle tail lamp, the inboard angle for each lamp shall be 45 degrees.

Table V–d—Visibility Requirements of Installed Lighting Devices (Legacy Visibility Alternative)

Lighting device		Required visibility[1]
Turn signal lamp	All passenger cars, multipurpose passenger vehicles, trucks, buses, motorcycles, and trailers of less than 2032 mm overall width	Unobstructed minimum effective projected luminous lens area of 1250 sq mm through horizontal angle of H–V to H–45° OB.

	All multipurpose passenger vehicles, trucks, buses, and trailers of 2032 mm or more overall width	Unobstructed minimum effective projected luminous lens area of 1300 sq mm through horizontal angle of H–V to H–45° OB. Where more than one lamp or optical area is lighted on each side of the vehicle, only one such area on each side need comply.
Stop lamp		Unobstructed minimum effective projected luminous lens area of 1250 sq mm through horizontal angle of H–45° IB to H–45° OB. Where more than one lamp or optical area is lighted on each side of the vehicle, only one such area on each side need comply.
Taillamp		Unobstructed minimum effective projected luminous lens area of 2 sq in through horizontal angle of H–45° IB to H–45° OB. Where more than one lamp or optical area is lighted on each side of the vehicle, only one such area on each side need comply.

[1] IB indicates an inboard direction (toward the vehicle's longitudinal centerline) and OB indicates an outboard direction.

E VI-a FRONT TURN SIGNAL LAMP PHOTOMETRY REQUIREMENTS

				BASE REQUIREMENTS						2.5X BASE REQUIREMENTS					
		MINIMUMPHOTOMETRIC INTENSITY RATIO WHERE COMBINED WITH A :		MINIMUM PHOTOMETRIC INTENSITY[1][2] (cd)			GROUP MINIMUM PHOTOMETRIC INTENSITY (cd)			MINIMUM PHOTOMETRIC INTENSITY[1][2] (cd)			GROUP MINIMUM PHOTOMETRIC INTENSITY (cd)		
CST POINT (degrees)		PARKING LAMP	CLEARANCE LAMP[4]	Lighted Sections			Lighted Sections			Lighted Sections			Lighted Sections		
				1	2	3	1	2	3	1	2	3	1	2	3
L	5U	3	3	25	30	35	130	155	180	62.5	75	87.5	325	387.5	450
	5D	-	3	25	30	35				62.5	75	87.5			
L	10U	3	3	40	48	55				100	120	137.5			
	10D[3]	-	3	40	48	55				100	120	137.5			
L	5U	3	3	75	88	100	250	295	340	187.5	220	250	625	737.5	850
	H	3	3	100	120	140				250	300	350			
	5D	-	3	75	88	100				187.5	220	250			
	5U	5	5	175	205	235	950	1130	1295	437.5	512.5	587.5	2375	2825	3237.5
L	H	5	5	200	240	275				500	600	687.5			
		5	5	200	240	275				500	600	687.5			
R		5	5	200	240	275				500	600	687.5			
	5D	-	3	175	205	235				437.5	512.5	587.5			
R	5U	3	3	75	88	100	250	295	340	187.5	220	250	625	737.5	850
	H	3	3	100	120	140				250	300	350			
	5D	-	3	75	88	100				187.5	220	250			
R	10U	3	3	40	48	55	130	155	180	100	120	137.5	325	387.5	450
	10D[3]	-	3	40	48	55				100	120	137.5			
R	5U	3	3	25	30	35				62.5	75	87.5			
	5D	-	3	25	30	35				62.5	75	87.5			

easured values at each test point must not be less than 60% of the minimum value.

notometric intensity values between test points must not be less than the lower specified minimum value of the two closest adjacent test points on a ntal or vertical line.

turn signal lamps are mounted with their axis of reference less than 750 mm above the road surface, photometry requirements below 5° down may be 5° down rather than at the specified required downward angle.

a clearance lamp on a vehicle 2032 mm or more in overall width is combined with a front turn signal lamp and the maximum luminous intensity of the nce lamp is located below horizontal and within a 1.0° radius around the test point, the ratio for the test point may be computed by using the lowest value clearance lamp luminous intensity within the generated area.

LE VI-6: FRONT TURN SIGNAL LAMP PHOTOMETRY REQUIREMENTS

TEST POINT (degrees)		MINIMUM PHOTOMETRIC INTENSITY RATIO WHERE COMBINED WITH A :		2 X BASE REQUIREMENTS						1.5X BASE REQUIREMENTS					
				MINIMUM PHOTOMETRIC INTENSITY[1][2] (cd)			GROUP MINIMUM PHOTOMETRIC INTENSITY (cd)			MINIMUM PHOTOMETRIC INTENSITY[1][2] (cd)			GROUP MINIMUM PHOTOMETRIC INTENSITY (cd)		
		PARKING LAMP	CLEARANCE LAMP[4]	Lighted Sections			Lighted Sections			Lighted Sections			Lighted Sections		
				1	2	3	1	2	3	1	2	3	1	2	3
20L	5U	3	3	50	60	70	260	310	360	37.5	45	52.5	195	232.5	270
	5D	-	3	50	60	70				37.5	45	52.5			
5L	10U	3	3	80	96	110				60	72	82.5			
	10D[3]	-	3	80	96	110				60	72	82.5			
10L	5U	3	3	150	176	200	500	590	680	112.5	132	150	375	442.5	510
	H	3	3	200	240	280				150	180	210			
	5D	-	3	150	176	200				112.5	132	150			
V	5U	5	5	350	410	470	1900	2260	2590	262.5	307.5	352.5	1425	1695	1942.5
5L	H	5	5	400	480	550				300	360	412.5			
V		5	5	400	480	550				300	360	412.5			
5R		5	5	400	480	550				300	360	412.5			
V	5D	-	3	350	410	470				262.5	307.5	352.5			
10R	5U	3	3	150	176	200	500	590	680	112.5	132	150	375	442.5	510
	H	3	3	200	240	280				150	180	210			
	5D	-	3	150	176	200				112.5	132	150			
5R	10U	3	3	80	96	110	260	310	360	60	72	82.5	195	232.5	270
	10D[3]	-	3	80	96	110				60	72	82.5			
20R	5U	3	3	50	60	70				37.5	45	52.5			
	5D	-	3	50	60	70				37.5	45	52.5			

measured values at each test point must not be less than 60% of the minimum value.
photometric intensity values between test points must not be less than the lower specified minimum value of the two closest adjacent test points on a zontal or vertical line.
re turn signal lamps are mounted with their axis of reference less than 750 mm above the road surface, photometry requirements below 5° down may be at 5° down rather than at the specified required downward angle.
n a clearance lamp on a vehicle 2032 mm or more in overall width is combined with a front turn signal lamp and the maximum luminous intensity of the ance lamp is located below horizontal and within a 1.0° radius around the test point, the ratio for the test point may be computed by using the lowest value e clearance lamp luminous intensity within the generated area.

TABLE VII: REAR TURN SIGNAL LAMP PHOTOMETRY REQUIREMENTS

GROUP NUMBER	TEST POINT (degrees)		TEST POINTS APPLICABLE TO DOUBLE FACED LAMPS[6]		MINIMUM PHOTOMETRIC INTENSITY RATIO WHERE COMBINED WITH A TAIL LAMP OR CLEARANCE LAMP[7][8]	MINIMUM PHOTOMETRIC INTENSITY[1][2] (cd) RED LAMPS			GROUP MINIMUM PHOTOMETRIC INTENSITY (cd) RED LAMPS			MINIMUM PHOTOMETRIC INTENSITY[1][2] (cd) AMBER LAMPS			GROUP MINIMUM PHOTOMETRIC INTENSITY (cd) AMBER LAMPS		
			LEFT SIDE LAMP	RIGHT SIDE LAMP		Lighted Sections			Lighted Sections			Lighted Sections			Lighted Sections		
						1	2	3	1	2	3	1[5]	2	3	1[5]	2	3
1	20L	5U	NO	YES	3	10	12	15	50	60	70	15	20	25	80/84	100	120
		5D	NO	YES	3	10	12	15				15	20	25			
	5L	10U	NO	YES	3	16	19	22				26/27	30	35			
		10D[3]	NO	YES	3	16	19	22				26/27	30	35			
2	10L	5U	NO	YES	3	30	35	40	100	115	135	50	55	65	165	185	220
		H	NO	YES	3	40	47	55				65	75	90			
		5D	NO	YES	3	30	35	40				50	55	65			
3	V	5U	YES	YES	5	70	82	95	380	445	520	110	130	150	610/590	710	825
	5L	H	NO	YES	5	80	95	110				130/120	150	175			
	V		YES	YES	5	80	95	110				130	150	175			
	5R		YES	NO	5	80	95	110				130/120	150	175			
	V	5D	YES	YES	3	70	82	95				110	130	150			
4	10R	5U	YES	NO	3	30	35	40	100	115	135	50	55	65	165	185	220
		H	YES	NO	3	40	47	55				65	75	90			
		5D	YES	NO	3	30	35	40				50	55	65			
5	5R	10U	YES	NO	3	16	19	22	50	60	70	26/27	30	35	80/84	100	120
		10D[3]	YES	NO	3	16	19	22				26/27	30	35			
	20R	5U	YES	NO	3	10	12	15				15	20	25			
		5D	YES	NO	3	10	12	15				15	20	25			
MAXIMUM PHOTOMETRIC INTENSITY[4]						300	360	420				750	900	900			

(1) The measured values at each test point must not be less than 60% of the minimum value.
(2) The photometric intensity values between test points must not be less than the lower specified minimum value of the two closest adjacent test points on a horizontal or vertical line.
(3) Where turn signal lamps are mounted with their axis of reference less than 750 mm above the road surface, photometry requirements below 5° down may be met at 5° down rather than at the required downward angle.
(4) The maximum photometric intensity must not occur over any area larger than that generated by a 0.5° radius within a solid angle defined by the test point range
(5) Values preceded by a slash (/) apply only to multipurpose passenger vehicles, trucks, trailers, and buses of 2032 mm or more in overall width.
(6) A double faced turn signal lamp installed as described in S6.1.1.3 on a truck tractor need only meet the photometric requirements for a left side lamp where the lamp is mounted on the left side of the vehicle, and for a right side lamp where the lamp is mounted on the right side of the vehicle.
(7) Required only when combined turn signal lamp and clearance lamp is installed on a vehicle 2032 mm or more in overall width.
(8) When a taillamp (or clearance lamp on a vehicle 2032 mm or more in overall width) is combined with a rear turn signal lamp and the maximum luminous intensity of the taillamp (or clearance lamp) is located below horizontal and within an area generated by a 0.5° radius around a test point (1.0° radius on lamps installed on a vehicle 2032 mm or more in overall width), the ratio for the test point may be computed by using the lowest value of the taillamp (or clearance lamp) luminous intensity within the generated area.

VIII: TAILLAMP PHOTOMETRY REQUIREMENTS

P NUMBER	TEST POINT (degrees)		PHOTOMETRIC INTENSITY[1][2][4] (cd)						GROUP MINIMUM PHOTOMETRIC INTENSITY[1][2] (cd)		
			Lighted Sections						Lighted Sections		
			1		2		3		1	2	3
			MINIMUM	MAXIMUM	MINIMUM	MAXIMUM	MINIMUM	MAXIMUM			
1	20L	5U	0.3	18	0.5	20	0.7	25	1.4	2.4	3.5
		5D	0.3	-	0.5	-	0.7	-			
	5L	10U	0.4	18	0.7	20	1.0	25			
		10D[3]	0.4	-	0.7	-	1.0	-			
2	10L	5U	0.8	18	1.4	20	2.0	25	2.4	4.2	6.0
		H	0.8	18	1.4	20	2.0	25			
		5D	0.8	-	1.4	-	2.0	-			
3	V	5U	1.8	18	3.1	20	4.5	25	9.6	16.8	24.0
	5L	H	2.0	18	3.5	20	5.0	25			
	V		2.0	18	3.5	20	5.0	25			
	5R		2.0	18	3.5	20	5.0	25			
	V	5D	1.8	-	3.1	-	4.5	-			
4	10R	5U	0.8	18	1.4	20	2.0	25	2.4	4.2	6.0
		H	0.8	18	1.4	20	2.0	25			
		5D	0.8	-	1.4	-	2.0	-			
5	5R	10U	0.4	18	0.7	20	1.0	25	1.4	2.4	3.5
		10D[3]	0.4	-	0.7	-	1.0	-			
	20R	5U	0.3	18	0.5	20	0.7	25			
		5D	0.3	-	0.5	-	0.7	-			

otometric intensity values between test points must not be less than the lower specified minimum value of the two closest adjacent test points on a tal or vertical line.

um of intensity values for all points in the group is not less than the specified total value for the group, the measured intensity value for each individual nt is not required to meet the minimum value.

taillamp are mounted with their axis of reference less than 750 mm above the road surface, photometry requirements below 5° down may be met at 5° ther than at the specified required downward angle.

mp shall not exceed the maximum intensity at H or above.

49 CFR 571.108 S14.9.3.12.6.3

BLE IX: STOP LAMP PHOTOMETRY REQUIREMENTS

	TEST POINT (degrees)		MINIMUM PHOTOMETRIC INTENSITY RATIO WHERE COMBINED WITH A TAIL LAMP[5]	MINIMUM PHOTOMETRIC INTENSITY[1][2] (cd) Lighted Sections 1	2	3	GROUP MINIMUM PHOTOMETRIC INTENSITY (cd) Lighted Sections 1	2	3
1	20L	5U	3	10	12	15	50	60	70
		5D	3	10	12	15			
	5L	10U	3	16	19	22			
		10D[4]	3	16	19	22			
2	10L	5U	3	30	35	40	100	1[illegible]	1[illegible]
		H	3	40	47	55			
		5D	3	30	35	40			
3	V	5U	5	70	82	95	380	445	520
	5L	H	3/5[6]	80	95	110			
	V		5	80	95	110			
	5R		5	80	95	110			
	V	5D	3	70	82	95			
4	10R	5U	3	30	35	40	100	1[illegible]	1[illegible]
		H	3	40	47	55			
		5D	3	30	35	40			
5	5R	10U	3	16	19	22	50	60	70
		10D[4]	3	16	19	22			
	20R	5U	3	10	12	15			
		5D	3	10	12	15			
XIMUM PHOTOMETRIC INTENSITY[7]				300	360	420			

e measured values at each test point must not be less than 60% of the minimum value.
e photometric intensity values between test points must not be less than the lower specified minimum
ue of the two closest adjacent test points on a horizontal or vertical line
e maximum photometric intensity must not occur over any area larger than that generated by a 0.5°
tus within a solid angle defined by the test point range

(4) Where stop lamps are mounted with their axis of reference less than 750 mm above the road surface, photometry requirements below 5° down may be met at 5° down rather than at the specified required downward angle.

(5) When a taillamp is combined with a stop lamp and the maximum luminous intensity of the taillamp is located below horizontal and within an area generated by a 0.5° radius around a test point (1.0° radius on lamps installed on a vehicle 2032 mm or more in overall width), the ratio for the test point may be computed by using the lowest value of the taillamp luminous intensity within the generated area.

(6) Values followed by a slash (/) apply only to lamps installed on multipurpose passenger vehicles, trucks, trailers, and buses of 2032 mm or more in overall width.

Table X—Side Marker Lamp Photometry Requirements

Test point (degrees)	Minimum photometric intensity (cd)(2) red lamps	Minimum photometric intensity (cd)(2) amber lamps
10U:		
45L(1)	0.25	0.62
V	0.25	0.62
45R(1)	0.25	0.62
H:		
45L(1)	0.25	0.62

Test point (degrees)	Minimum photometric intensity (cd)[2] red lamps	Minimum photometric intensity (cd)[2] amber lamps
V	0.25	0.62
45R[1]	0.25	0.62
10D:[3]		
45L[1]	0.25	0.62
V	0.25	0.62
45R[1]	0.25	0.62

[1] Where a side marker lamp installed on a motor vehicle less than 30 feet in overall length has the lateral angle nearest the other required side marker lamp on the same side of the vehicle reduced from 45° by design as specified by S7.4.13.2, the photometric intensity measurement may be met at the lesser angle.

[2] The photometric intensity values between test points must not be less than the lower specified minimum value of the two closest adjacent test points on a horizontal or vertical line.

[3] Where side marker lamps are mounted with their axis of reference less than 750 mm above the road surface, photometry requirements below 5° down may be met at 5° down rather than at the specified required downward angle.

Table XI—Clearance and Identification Lamps Photometry Requirements

Test point (degrees)	Minimum photometric intensity (cd)[2] red lamps	Minimum photometric intensity (cd)[2] amber lamps
10U:		
45L[4]	0.25	0.62
V	0.25	0.62
45R[4]	0.25	0.62
H:		
45L[4]	0.25	0.62
V	0.25	0.62
45R[4]	0.25	0.62
10D:[1]		
45L[4]	0.25	0.62
V	0.25	0.62
45R[4]	0.25	0.62
Maximum photometric intensity[3] (cd) red lamps	15	

[1] Where clearance lamps or identification lamps are mounted with their axis of reference less than 750mm above the road surface, photometry requirements below 5° down may be met at 5° down rather than at the specified required downward angle.

(2) The photometric intensity values between test points must not be less than the lower specified minimum value of the two closest adjacent test points on a horizontal or vertical line.

(3) When optically combined with a stop lamp or turn signal lamp, this maximum applies on or above the horizontal.

(4) Where clearance lamps are installed at locations other than on the front and rear due to the necessity to indicate the overall width of the vehicle, or for protection from damage during normal operation of the vehicle, they need not meet the photometric intensity requirement at any test point that is 45° inboard.

: BACKUP LAMP PHOTOMETRY REQUIREMENTS

EST POINT (degrees)		MAXIMUM PHOTOMETRIC INTENSITY (cd) ANY SINGLE LAMP	TWO LAMP SYSTEMS – EACH LAMP		SINGLE LAMP SYSTEM	
			MINIMUM PHOTOMETRIC INTENSITY (cd)[1][4]	GROUP MINIMUM PHOTOMETRIC INTENSITY (cd)	MINIMUM PHOTOMETRIC INTENSITY (cd)[1][4]	GROUP MINIMUM PHOTOMETRIC INTENSITY (cd)
5L	5U	300/600[5]	15	45	30	90
	H	300/600[5]	15		30	
	5D	-	15		30	
0L	H	300/600[5]	25	50	50	100
	5D	-	25		50	
0L	10U	300/600[5]	10	100	20	200
	5U	300/600[5]	20		40	
V	10U	300/600[5]	15		30	
	5U	300/600[5]	25		50	
0R	10U	300/600[5]	10		20	
	5U	300/600[5]	20		40	
0L	H	300/600[5]	50	360	100	720
	5D	-	50		100	
V	H	300/600[5]	80		160	
	5D	-	80		160	
0R	H	300/600[5]	50		100	
	5D	-	50		100	
0R	H	300/600[5]	25	50	50	100
	5D	-	25		50	
5R	5U	300/600[5]	15	45	30	90
	H	300/600[5]	15		30	
	5D	-	15		30	

tric intensity values between test points must not be less than the lower specified minimum value of the two closest adjacent test points on a vertical line.

mps of the same or symmetrically opposite design are used, the tested photometric values along the vertical axis and the averages of the tested values for the same horizontal test point left and right of vertical for one lamp must be used to determine compliance with the requirements.

mps of differing designs are used, they must be tested individually and the tested photometric values added to determine the combined units with twice the stated requirements.

f intensity values for all points in the group is not less than the specified total value for the group, the measured intensity value for each individual not required to meet the minimum value.

efore the slash applies to each lamp in a multiple lamp system; the value after the slash applies to a single lamp system.

TORCYCLE TURN SIGNAL LAMP ALTERNATIVE PHOTOMETRY REQUIREMENTS

MINIMUM PHOTOMETRIC INTENSITY RATIO WHERE COMBINED WITH A		MINIMUM PHOTOMETRIC INTENSITY[1][2] (cd) FRONT TURN SIGNAL LAMP			GROUP MINIMUM PHOTOMETRIC INTENSITY (cd) FRONT TURN SIGNAL LAMP			MINIMUM PHOTOMETRIC INTENSITY[1][2] (cd) RED REAR TURN SIGNAL LAMP			GROUP MINIMUM PHOTOMETRIC INTENSITY[1][2] (cd) RED REAR TURN SIGNAL LAMP			MINIMUM PHOTOMETRIC INTENSITY[1][2] (cd) AMBER REAR TURN SIGNAL LAMP			GROUP MINIMUM PHOTOMETRIC INTENSITY (cd) AMBER REAR TURN SIGNAL LAMP		
ING MP	TAIL LAMP[5]	Lighted Sections			Lighted Sections			Lighted Sections			Lighted Sections			Lighted Sections			Lighted Sections		
		1	2	3	1	2	3	1	2	3	1	2	3	1	2	3	1	2	3
	3	12.5	15	17.5				5	6	7.5				7.5	10	12.5			
	3	12.5	15	17.5	65	77.5	90	5	6	7.5	25	30	35	7.5	10	12.5	40	50	60
	3	20	24	27.5				8	9.5	11				13	15	17.5			
	3	20	24	27.5				8	9.5	11				13	15	17.5			
	3	37.5	44	50				15	17.5	20				25	27.5	32.5			
	3	50	60	70	125	147.5	170	20	23.5	27.5	50	57.5	67.5	32.5	37.5	45	82.5	92.5	110
	3	37.5	44	50				15	17.5	20				25	27.5	32.5			
	5	87.5	102.5	117.5				35	41	47.5				55	65	75			
	5	100	120	137.5				40	47.5	55				65	75	87.5			
	5	100	120	137.5	475	565	647.5	40	47.5	55	190	222.5	260	65	75	87.5	305	355	412.5
	5	100	120	137.5				40	47.5	55				65	75	87.5			
	3	87.5	102.5	117.5				35	41	47.5				55	65	75			
	3	37.5	44	50				15	17.5	20				25	27.5	32.5			
	3	50	60	70	125	147.5	170	20	23.5	27.5	50	57.5	67.5	32.5	37.5	45	82.5	92.5	110
	3	37.5	44	50				15	17.5	20				25	27.5	32.5			
	3	20	24	27.5				8	9.5	11				13	15	17.5			
	3	20	24	27.5	65	77.5	90	8	9.5	11	25	30	35	13	15	17.5	40	50	60
	3	12.5	15	17.5				5	6	7.5				7.5	10	12.5			
	3	12.5	15	17.5				5	6	7.5				7.5	10	12.5			
IC INTENSITY[3]								300	360	420				750	900	900			

values at each test point must not be less than 60% of the minimum value.

ric intensity values between test points must not be less than the lower specified minimum value of the two closest adjacent test points on a horizontal or vertical

n photometric intensity must not occur over any area larger than that generated by a 0.5° radius within a solid angle defined by the test point range.

gnal lamps are mounted with their axis of reference less than 750 mm above the road surface, photometry requirements below 5° down may be met at 5° down the specified required downward angle.

mp is combined with a rear turn signal lamp and the maximum luminous intensity of the taillamp is located below horizontal and within an area generated by a ound a test point the ratio for the test point may be computed by using the lowest value of the taillamp luminous intensity within the generated area.

MOTOR DRIVEN CYCLE STOP LAMP[3] ALTERNATIVE PHOTOMETRY REQUIREMENTS			
MINIMUM PHOTOMETRIC INTENSITY RATIO WHERE A MOTOR DRIVEN CYCLE STOP LAMP IS COMBINED WITH A TAIL LAMP[4]	GROUP MINIMUM PHOTOMETRIC INTENSITY (cd) MOTOR DRIVEN CYCLE STOP LAMP		
	Lighted Sections		
	1	2	3
3	26	31	36
3			
3			
3			
3	50	59	69
3			
3			
5	190	226	261
5			
5			
5			
3			
3	50	59	69
3			
3			
3	26	31	36
3			
3			
3			
METRIC INTENSITY[1]	300	360	420

n photometric intensity must not occur over any area larger than that generated by a 0.5° radius within a solid angle
e test point range.
mps are mounted with their axis of reference less than 750 mm above the road surface, photometry requirements
n may be met at 5° down rather than at the specified required downward angle.
for a motor-driven cycle whose speed attainable in 1 mile is 30 mph or less.
mp is combined with a stop lamp and the maximum luminous intensity of the taillamp is located below horizontal and
generated by a 0.5° radius around a test point the ratio for the test point may be computed by using the lowest value
luminous intensity within the generated area

IV: PARKING LAMP PHOTOMETRY REQUIREMENTS

TEST POINT (degrees)		MINIMUM PHOTOMETRIC INTENSITY[1][2] (cd)	MAXIMUM PHOTOMETRIC INTENSITY (cd)	GROUP MINIMUM PHOTOMETRIC INTENSITY (cd)
20L	5U	0.4	125	2.4
	5D	0.4	250	
5L	10U	0.8	125	
	10D[3]	0.8	250	
10L	5U	0.8	125	3.0
	H	1.4	125	
	5D	0.8	250	
V	5U	2.8	125	16.8
5L	H	3.6	125	
V		4.0	125	
5R		3.6	125	
V	5D	2.8	250	
10R	5U	0.8	125	3.0
	H	1.4	125	
	5D	0.8	250	
5R	10U	0.8	125	2.4
	10D[3]	0.8	250	
20R	5U	0.4	125	
	5D	0.4	250	

otometric intensity values between test points must not be less than the lower specified minimum of the two closest adjacent test points on a horizontal or vertical line.

sum of intensity values for all points in the group is not less than the specified total value for the the measured intensity value for each individual test point is not required to meet the minimum

e parking lamps are mounted with their axis of reference less than 750 mm above the road surface, metry requirements below 5° down may be met at 5° down rather than at the specified required vard angle.

V: HIGH-MOUNTED STOP LAMP PHOTOMETRY REQUIREMENTS

GROUP NUMBER	TEST POINT (degrees)		MINIMUM PHOTOMETRIC INTENSITY[1][2][3] (cd)	GROUP MINIMUM PHOTOMETRIC INTENSITY[3] (cd)
1	V	5U	25	125
	5L	H	25	
	V	H	25	
	5R	H	25	
	V	5D	25	
2	5R	5U	25	98
	10R	5U	16	
	10R	H	16	
	10R	5D	16	
	5R	5D	25	
3	5L	5U	25	98
	10L	5U	16	
	10L	H	16	
	10L	5D	16	
	5L	5D	25	
4	10L	10U	8	32
	V	10U	16	
	10R	10U	8	
MAXIMUM PHOTOMETRIC INTENSITY[4]			160	

tometric intensity values between test points must not be less than the lower specified minimum
the two closest adjacent test points on a horizontal or vertical line.
tometric intensity at each test point must not be less than 60% of the specified minimum value
nsidering overall group photometry tables.
pair of lamps identical in size and shape are used due to vehicle construction, they together
eet photometric requirements.
imum photometric intensity must not occur over any area larger than that generated by a 0.25°
within a solid cone angle within the rectangle bounded by test points 10U-10L, 10U-10R,
and 5D-10R.

Table XVI–a—Reflex Reflector Photometry Requirements

Observation angle (degrees)	Entrance angle (degrees)	Minimum performance					
		Red reflectors		Amber reflectors		White reflectors	
		(cd/incident ft-c)	(mcd/lux)	(cd/incident ft-c)	(mcd/lux)	(cd/incident ft-c)	(mcd/lux)
0.2	0	4.5	420	11.25	1050	18	1680
	10U	3.0	280	7.5	700	12	1120
	10D[1]	3.0	280	7.5	700	12	1120
	20L	1.5	140	3.75	350	6	560
	20R	1.5	140	3.75	350	6	560
1.5	0	0.07	6	0.175	15	0.28	24
	10U	0.05	5	0.125	12.5	0.2	20
	10D[1]	0.05	5	0.125	12.5	0.2	20
	20L	0.03	3	0.075	7.5	0.12	12
	20R	0.03	3	0.075	7.5	0.12	12

[1] Where reflex reflectors are mounted with their axis of reference less than 750 mm above the road surface, photometry requirements below 5° down may be met at 5° down rather than at the required specified downward angle.

Table XVI–b—Additional Photometry Requirements for Conspicuity Reflex Reflectors

Observation angle (degrees)	Entrance angle (degrees)	Minimum performance		
		Red (mcd/lux)	White horizontal orientation (mcd/lux)	White vertical orientation (mcd/lux)
0.2	0	300	1250	1680
	20L TO 20R			560
	30L TO 30R	300	1250	
	45L TO 45R	75	300	
	10U TO 10D	1120		

Table XVI–c—Retroreflective Sheeting Photometry Requirements

Observation angle (degrees)	Entrance angle (degrees)	Minimum performance					
		Grade dot-C2		Grade dot-C3		Grade dot-C4	
		White	Red	White	Red	White	Red
		(cd/lux/sq m)	(cd/lux/sq m)	(cd/lux/sq m)	(cd/lux/sq m)	(cd/lux/sq m)	(cd/lux/sq m)
0.2	−4	250	60	165	40	125	30
	30	250	60	165	40	125	30
	45	60	15	40	10	30	8
0.5	−4	65	15	43	10	33	8
	30	65	15	43	10	33	8
	45	15	4	10	3	8	2

Table XVII—School Bus Signal Lamp Photometry Requirements

Test point (degrees)	Minimum photometric intensity (cd)[2] red lamps	Minimum photometric intensity (cd) amber lamps
5U:		
20L	150	375
10L	300	750
5L	300	750
V	300	750
5R	300	750
10R	300	750
20R	150	375
H:		
30L	30	75
20L	180	450
10L	400	1000
5L	500	1250
V	600	1500
5R	500	1250
10R	400	1000
20R	180	450
30R	30	75
5D:		
30L	30	75
20L	200	500
10L	300	750
5L	450	1125
V	450	1125
5R	450	1125
10R	300	750
20R	200	500
30R	30	75
10D:[1]		
5L	40	100
V	40	100
5R	40	100

[1] Where school bus signal lamps are mounted with their axis of reference less than 750 mm above the road surface, photometry requirements below 5° down may be met at 5° down rather than at the specified required downward angle.

(2) The photometric intensity values between test points must not be less than the lower specified minimum value of the two closest adjacent test points on a horizontal or vertical line.

Table XXI—Adaptive Driving Beam Photometry Requirements (1)

Measurement distance interval (m)	Maximum illuminance Opposite direction (lux)	Maximum illuminance same direction (lux)
Greater than or equal to 15.0 and less than 30.0	3.1	18.9
Greater than or equal to 30.0 and less than 60.0	1.8	18.9
Greater than or equal to 60.0 and less than 120.0	0.6	4.0
Greater than or equal to 120.0 and less than or equal to 220	0.3	N/A

(1) For purposes of determining conformance with these specifications, an observed value or a calculated value shall be rounded to the nearest 0.1 lux, in accordance with the rounding method of ASTM Practice E29 Using Significant Digits in Test Data to Determine Conformance with Specifications.

Table XXII—Adaptive Driving Beam System Test Matrix

Scenario No.	Test vehicle speed (kph)	Orientation	Radius of curve (m.)	Curve direction	Superelevation (%)	Measurement distance range (m)
1	96.6–112.7 [60–70 mph]	Opposite Direction	Straight	N/A	0–2	Greater than or equal to 15 and less than or equal to 220.
2	40.2–48.3 [25–30 mph]	Opposite Direction	85–115	Left	0–2	Greater than or equal to 15 and less than 60.
3	64.4–72.4 [40–45 mph]	Opposite Direction	210–250	Left	0–2	Greater than or equal to 15 and less than or equal to 150.
4	80.5–88.5 [50–55 mph]	Opposite Direction	335–400	Left	0–2	Greater than or equal to 15 and less than or equal to 220.
5	64.4–72.4 [40–45 mph]	Opposite Direction	210–250	Right	0–2	Greater than or equal to 15 and less than or equal to 50.
6	80.5–88.5 [50–55 mph]	Opposite Direction	335–400	Right	0–2	Greater than or equal to 15 and less than or equal to 70.
7	96.6–112.7	Same	Straight	N/A	0–2	Greater than or equal to 15

Scenario No.	Test vehicle speed (kph)	Orientation	Radius of curve (m.)	Curve direction	Superelevation (%)	Measurement distance range (m)
	[60–70 mph]	Direction				and less than or equal to 100.
8	64.4–72.4 [40–45 mph]	Same Direction	210–250	Left	0–2	Greater than or equal to 15 and less than or equal to 100.

II: HEADLAMP UPPER BEAM PHOTOMETRY REQUIREMENTS

OINT es)	UPPER BEAM #1 (UB1)		UPPER BEAM #2 (UB2)		UPPER BEAM #3 (UB3)	
	MAXIMUM PHOTOMETRIC INTENSITY (cd)	MINIMUM PHOTOMETRIC INTENSITY (cd)	MAXIMUM PHOTOMETRIC INTENSITY (cd)	MINIMUM PHOTOMETRIC INTENSITY (cd)	MAXIMUM PHOTOMETRIC INTENSITY (cd)	MINIMUM PHOTOMETRIC INTENSITY (cd)
V	-	1,500	-	1,500	-	1,000
3L &3R	-	5,000	-	5,000	-	2,000
V	70,000	40,000	75,000	40,000	75,000	20,000
3L & 3R	-	15,000	-	15,000	-	10,000
6L & 6R	-	5,000	-	5,000	-	3,250
9L & 9R	-	3,000	-	3,000	-	1,500
2L & 12R	-	1,500	-	1,500	-	750
V	-	5,000	-	5,000	-	5,000
9L & 9R	-	2,000	-	2,000	-	1,500
V	-	2,500	-	2,500	-	2,500
2L & 12R	-	1,000	-	1,000	-	750
V	5,000	-	12,000	-	5,000	-

	UPPER BEAM #4 (UB4)		UPPER BEAM #5 (UB5)		UPPER BEAM #6 (UB6)	
V	-	750	-	750	-	1,500
3L &3R	-	3,000	-	2,000	-	5,000
V	60,000	18,000	15,000	7,000	70,000	40,000
3L & 3R	-	12,000	-	3,000	-	15,000
6L & 6R	-	3,000	-	2,000	-	5,000
9L & 9R	-	2,000	-	1,000	-	3,000
2L & 12R	-	750	-	750	-	1,500
V	-	3,000	-	2,000	-	5,000
9L & 9R	-	1,250	-	750	-	1,000
V	-	1,500	-	1,000	-	-
2L & 12R	-	600	-	400	-	-
V	5,000	-	2,500	-	5,000	-

ADLAMP LOWER BEAM PHOTOMETRY REQUIREMENTS

	LOWER BEAM # 1M (LB1M)		LOWER BEAM # 1V (LB1V)		LOWER BEAM # 2M (LB2M)		LOWER BEAM # 2V (LB2V)	
	MAXIMUM PHOTOMETRIC INTENSITY (cd)	MINIMUM PHOTOMETRIC INTENSITY (cd)	MAXIMUM PHOTOMETRIC INTENSITY (cd)	MINIMUM PHOTOMETRIC INTENSITY (cd)	MAXIMUM PHOTOMETRIC INTENSITY (cd)	MINIMUM PHOTOMETRIC INTENSITY (cd)	MAXIMUM PHOTOMETRIC INTENSITY (cd)	MINIMUM PHOTOMETRIC INTENSITY (cd)
)L to)R	125	-	125	-	125	-	125	
& 8R	-	64	-	64	-	64	--	64
L	-	135	-	135	-	135	-	135
o 3R	-	200	-	200	-	200	-	200
to R	1,400	-	1,400	-	1,400	-	1,400	-
to L	700	-	700	-	700	-	700	-
to L	1,000	-	1,000	-	1,000	-	1,000	-
o 3R	2,700	500	2,700	500	2,700	500	2,700	500
/	5,000	-	5,000	-	-	-	-	-
L	-	135	-	135	-	135	-	135
L	-	64	-	64	-	64	-	64
to L	3,000	-	-	-	3,000	-	-	-
5R	20,000	10,000	-	-	20,000	10,000	-	-
3R	-	-	-	10,000	-	-	-	10,000
/	-	-	-	4,500	-	-	-	4,500
5L	-	-	12,000	1,800	-	-	12,000	1,800
L	-	1,000	-	-	-	1,000	-	-
R	-	15,000	-	15,000	-	15,000	-	15,000
& 9R	-	1,000	-	-	-	1,000	-	-
& 9R	-	-	-	1,250	-	-	-	1,250
& 15R	-	850	-	1,000	-	850	-	1,000
/	-	-	-	-	-		-	-
& 12R	-	-	-	-	-	-	-	-
/	7,000	-	10,000	-	-	-	-	-
R	12,500	-	12,500	-	12,500	-	12,500	-
& 20R	-	-	-	300	-	-	-	300

points a: boundaries, intensity values within this boundary must meet the listed photometry requirement.

ADLAMP LOWER BEAM PHOTOMETRY REQUIREMENTS

	LOWER BEAM #3 M (LB3M)		LOWER BEAM # 3V (LB3V)		LOWER BEAM # 4M (LB4M)		LOWER BEAM # 5M (LB5M)	
	MAXIMUM PHOTOMETRIC INTENSITY (cd)	MINIMUM PHOTOMETRIC INTENSITY (cd)	MAXIMUM PHOTOMETRIC INTENSITY (cd)	MINIMUM PHOTOMETRIC INTENSITY (cd)	MAXIMUM PHOTOMETRIC INTENSITY (cd)	MINIMUM PHOTOMETRIC INTENSITY (cd)	MAXIMUM PHOTOMETRIC INTENSITY (cd)	MINIMUM PHOTOMETRIC INTENSITY (cd)
)L to)R	125	-	125	-	125	-	125	-
& 8R	-	64	-	64	-	64	-	64
L	-	135	-	135	-	135	-	135
o 3R	-	200	-	200	-	200	-	200
to R	1,400	-	1,400	-	1,400	-	1,400	--
to L	700	-	700	-	700	-	700	-
to L	1,000	-	1,000	-	1,000	-	1,000	-
o 3R	2,700	500	2,700	500	2,700	500	2,700	500
/	-	-	-	-	-	-	5,000	-
L	-	135	-	135	-	135	-	135
L	-	64	-	64	-	64	-	64
to L	2,500	-	-	-	2500	-	3,000	-
5R	20,000	8,000	-	-	20,000	8,000	20,000	10,000
3R	-		-	10,000	-	-	-	-
/	-	--	-	4,500	-	-	-	-
5L	-	-	12,000	1,800	-	-	-	-
L	-	750	-	-	-	750	-	1,000
R	-	15,000	-	15,000	-	15,000	-	15,000
& 9R	-	750	-	-	-	750	-	1,000
& 9R	-	-	-	1,250	-	-	-	-
& 15R	-	700	-	1,000	-	700	-	850
/	-	-	-	-	-	-	-	2,500
& 12R	-	-	-	-	-	-	-	1,000
/	-	-	-	-	-	-	7,000	-
R	12,500	-	12,500	-	12,500	-	12,500	-
& 20R	-	-	-	300	-	-	-	-

points a: boundaries, intensity values within this boundary must meet the listed photometry requirement.

DLAMP LOWER BEAM PHOTOMETRY REQUIREMENTS

POINT (grees)	LOWER BEAM # 4 V (LB4V)	
	MAXIMUM PHOTOMETRIC INTENSITY (cd)	MINIMUM PHOTOMETRIC INTENSITY (cd)
(1) 90L to 90R	125	-
8L & 8R	-	64
4L	-	135
1L to 3R	-	200
R to R	1,400	-
1.5L to L	700	-
1.5L to L	1,000	-
1.3R to 3R	2,700	500
V	5,000	-
4L	-	135
8L	-	64
1.5L to L	-	-
1.5R	-	-
1.3R	-	10,000
V	-	4,500
3.5L	12,000	1,800
6L	-	-
2R	-	15,000
9L & 9R	--	-
9L & 9R	-	1,250
15L & 15R	-	1,000
V	-	2,500
12L & 12R	-	1,000
V	10,000	-
4R	12,500	-
20L & 20R	-	300

oints are boundaries, intensity values within this boundary must meet the listed photometry requirement.

TABLE XX: MOTORCYCLE AND MOTOR DRIVEN CYCLE HEADLAMP PHOTOMETRY REQUIREMENTS

LOWER BEAM

TEST POINT (degrees)		MOTORCYCLE		MOTOR DRIVEN CYCLE		MOTOR DRIVEN CYCLE with Single Lamp System	
		MAXIMUM PHOTOMETRIC INTENSITY (cd)	MINIMUM PHOTOMETRIC INTENSITY (cd)	MAXIMUM PHOTOMETRIC INTENSITY (cd)	MINIMUM PHOTOMETRIC INTENSITY (cd)	MAXIMUM PHOTOMETRIC INTENSITY (cd)	MINIMUM PHOTOMETRIC INTENSITY (cd)
1.5U	1R to R	1,400	-	1,400	-	-	-
1.5U	1R to 3R	-	-	-	-	1,400	-
1U	1.5L to L	700	-	700	-	700	-
0.5U	1.5L to L	1,000	-	1,000	-	1,000	-
0.5U	1R to 3R	2,700	-	2,700	-	2,700	-
1.5D	9L and 9R	-	700	-	-	-	-
2D	V	-	7,000	-	5,000	-	4,000
2D	3L and 3R	-	4,000	-	3,000	-	3,000
2D	6L and 6R	-	1,500	-	1,500	-	1,500
2D	12L and 12R	-	700	-	-	-	-
3D	6L and 6R	-	800	-	800	-	-
4D	V	-	2,000	-	2,000	-	1,000
4D	4R	12,500	-	12,500	-	12,500	-

UPPER BEAM

TEST POINT (degrees)		MOTORCYCLE		MOTOR DRIVEN CYCLE	
		MAXIMUM PHOTOMETRIC INTENSITY (cd)	MINIMUM PHOTOMETRIC INTENSITY (cd)	MAXIMUM PHOTOMETRIC INTENSITY (cd)	MINIMUM PHOTOMETRIC INTENSITY (cd)
2U	V	-	1,000	-	-
1U	3L and 3R	-	2,000	-	2,000
H	V	-	12,500	-	10,000
0.5D	V	-	20,000	-	20,000
0.5D	3L and 3R	-	10,000	-	5,000
0.5D	6L and 6R	-	3,300	-	2,000
0.5D	9L and 9R	-	1,500	-	-
0.5D	12L and 12R	-	800	-	-
1D	V	-	17,500	-	15,000
2D	V	-	5,000	-	5,000
3D	V	-	2,500	-	2,500
3D	6L and 6R	-	-	-	800
3D	9L and 9R	-	1,500	-	-
3D	12L and 12R	-	300	-	-
4D	V	-	1,500	-	-
4D	V	7,500	-	7,500	-
ANYWHERE IN BEAM		75,000	-	75,000	-

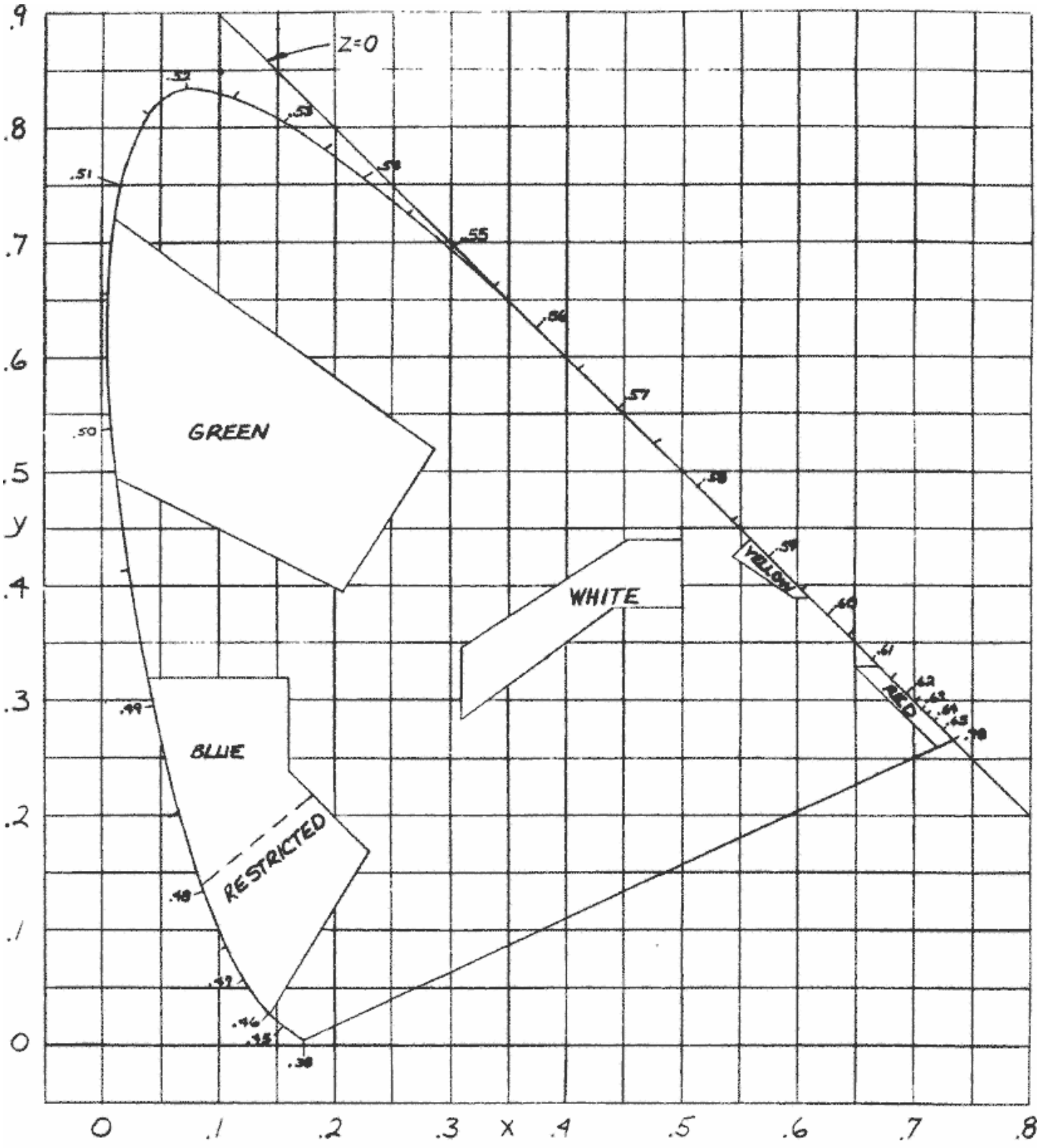

CHROMATICITY DIAGRAM

FIGURE 1

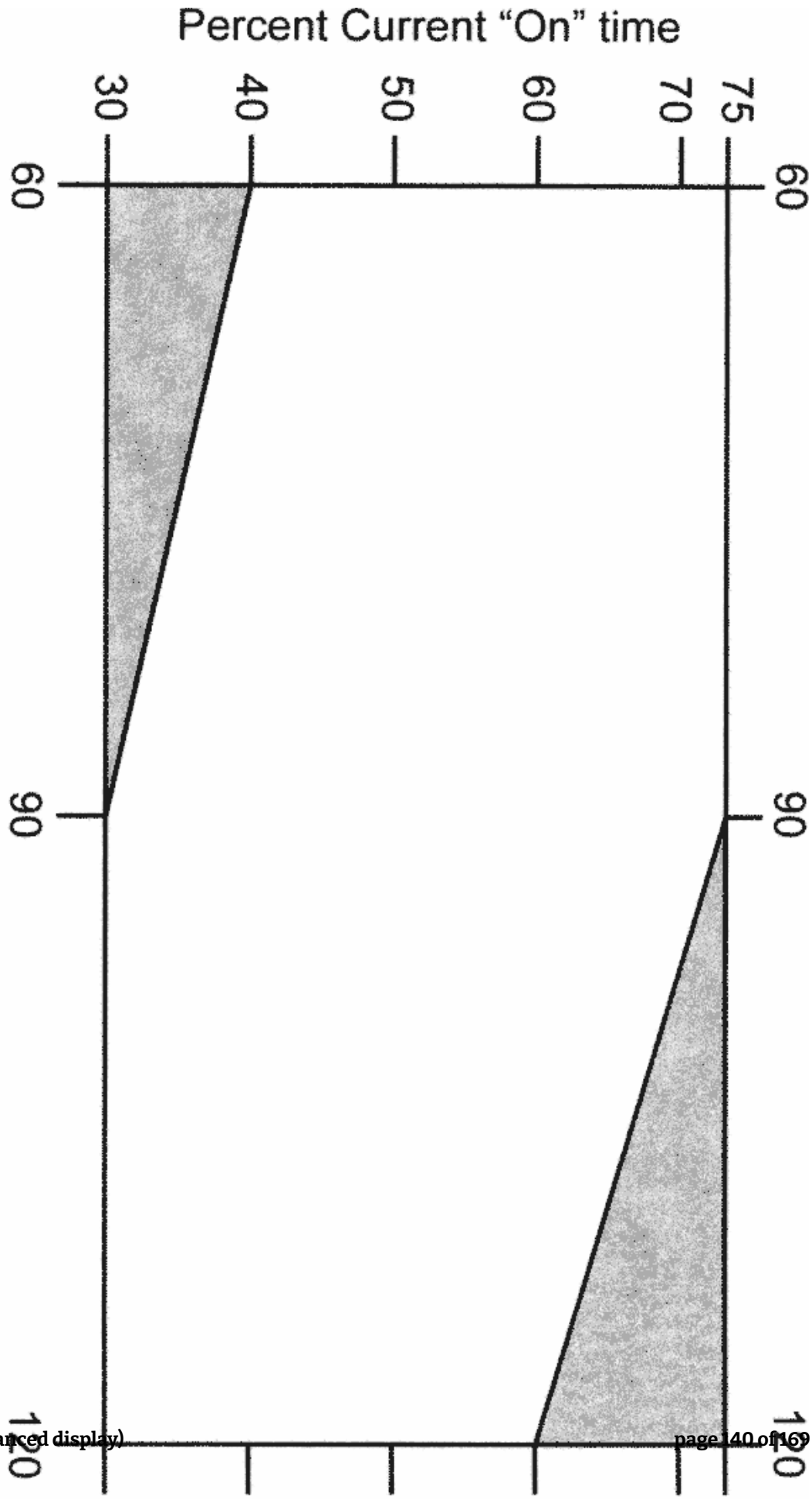

FLASHER PERFORMANCE CHART

FIGURE 2

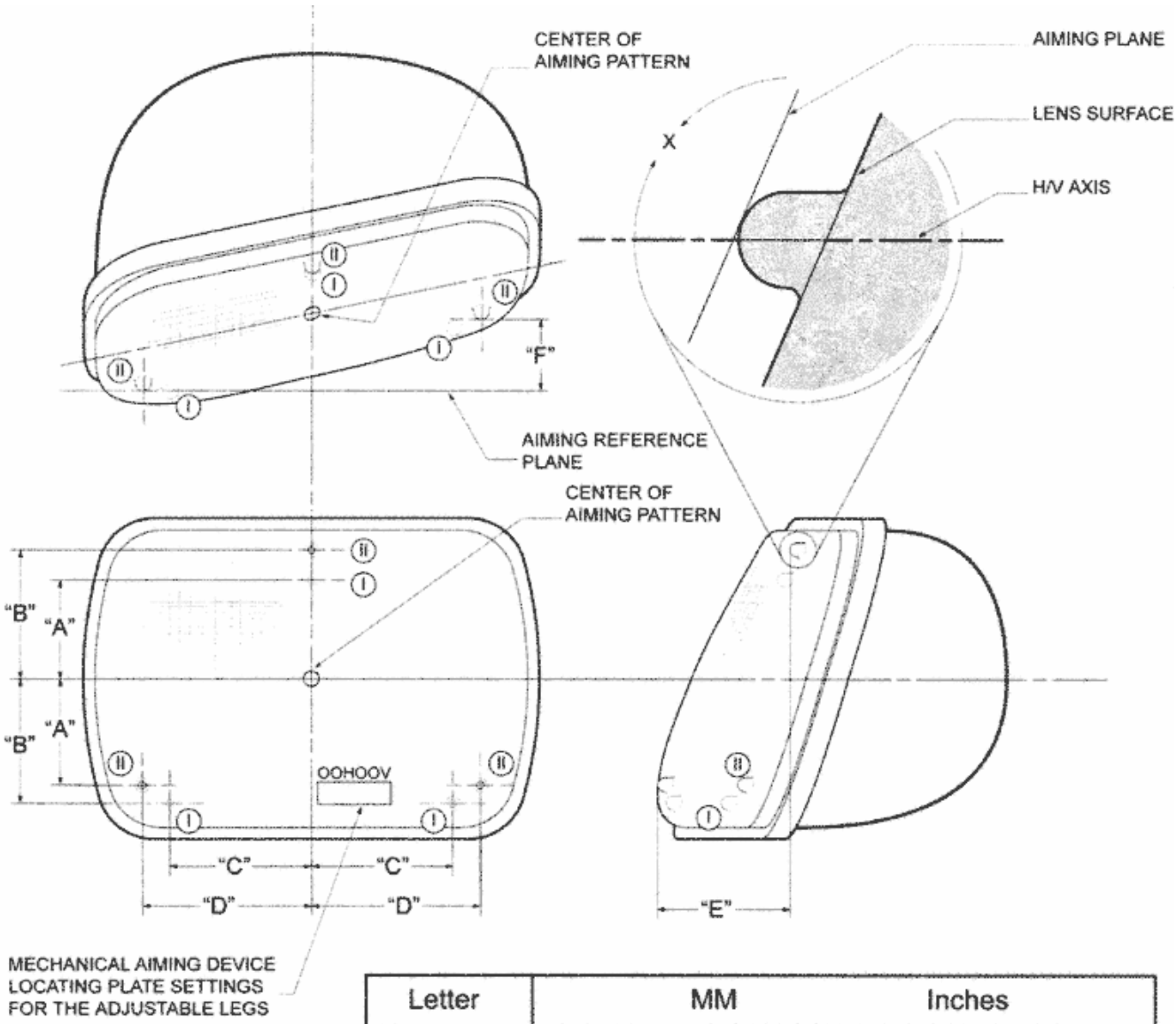

Notes:
Group I or Group II aiming pad locations may be used

Group I aiming pad location (front view) is that prescribed for 2B1 sealed beam units

Group II aiming pad location (front view) is that prescribed for 1A1/2A1 sealed beam units

Letter	MM	Inches
A	42.16 ± 0.25	1.660 ± 0.010
B	60.05 ± 1.00	2.364 ± 0.039
C	64.0 ± 1.00	2.520 ± 0.039
D	68.58 ± 0.51	2.700 ± 0.020
E	Mechanical aiming device locating plate setting for the vertical adjustable leg. (Millimeters)	
F	Mechanical aiming device locating plate setting for the horizontal adjustable leg. (Millimeters)	

REPLACEABLE BULB HEADLAMP AIM PADS

FIGURE 3

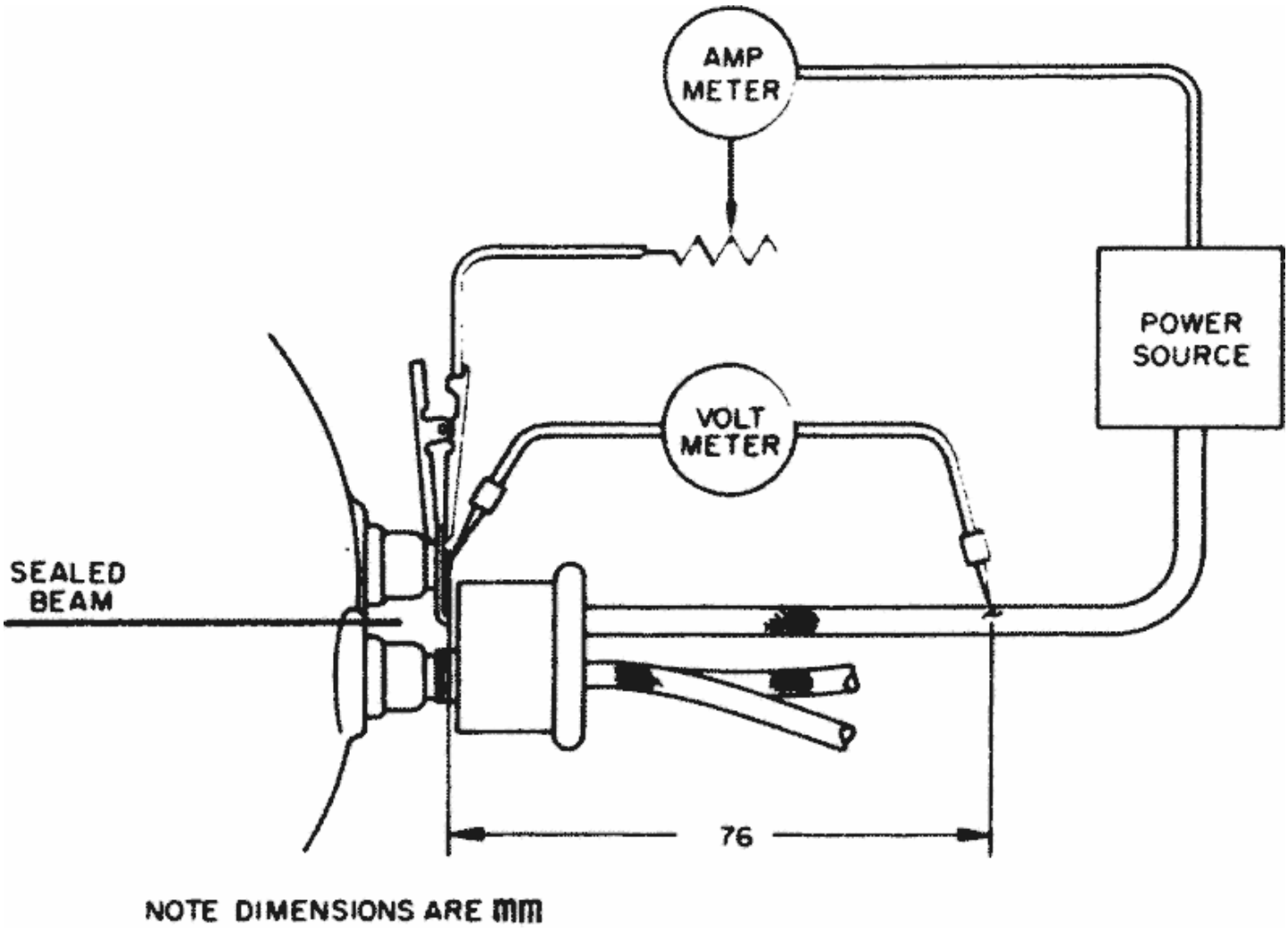

HEADLAMP CONNECTOR TEST SETUP

FIGURE 4

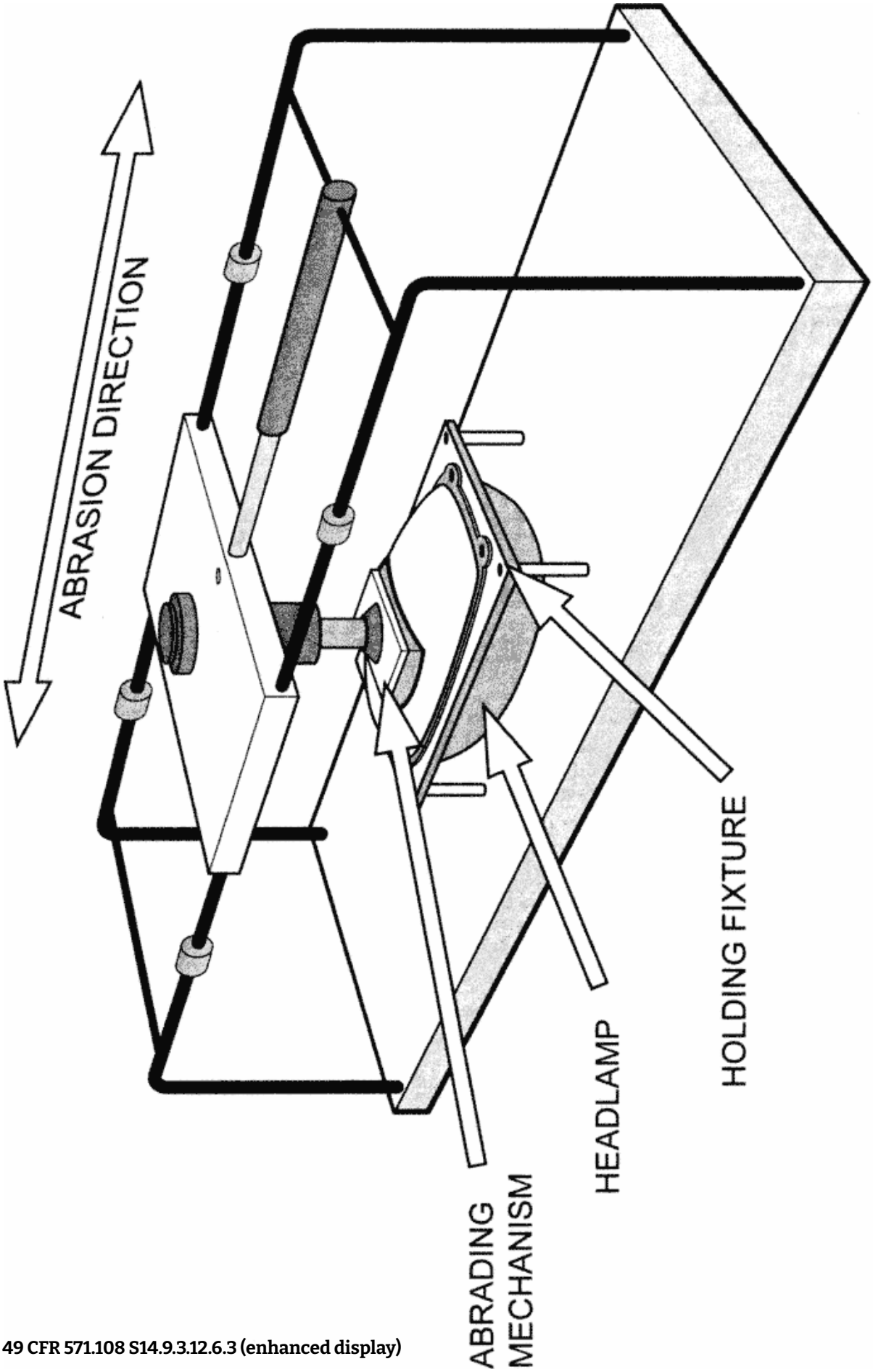

HEADLAMP ABRASION TEST FIXTURE

FIGURE 5

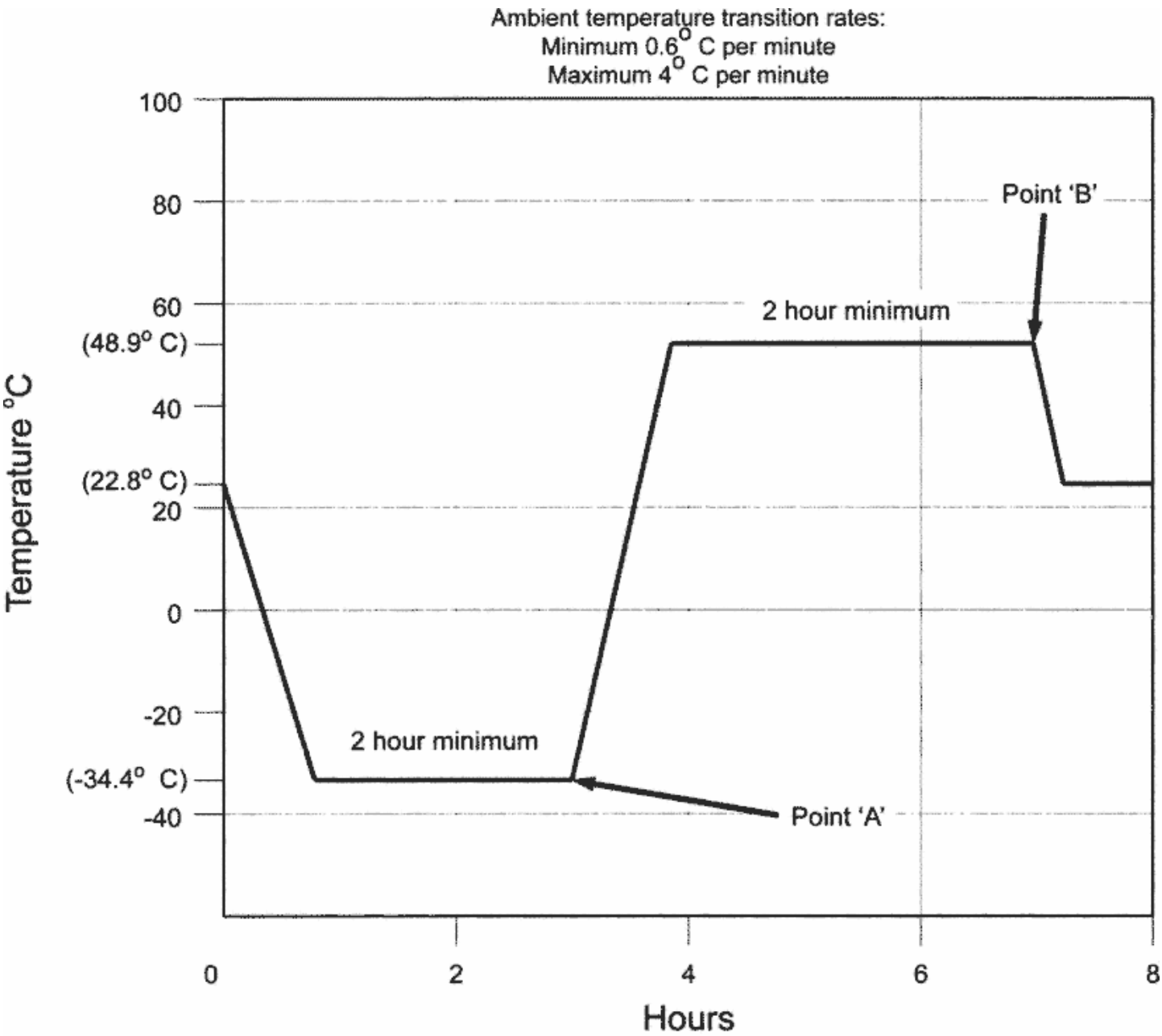

Note: Ambient conditions 23° C ± 4° and 30% RH ± 10%

THERMAL CYCLE PROFILE

FIGURE 6

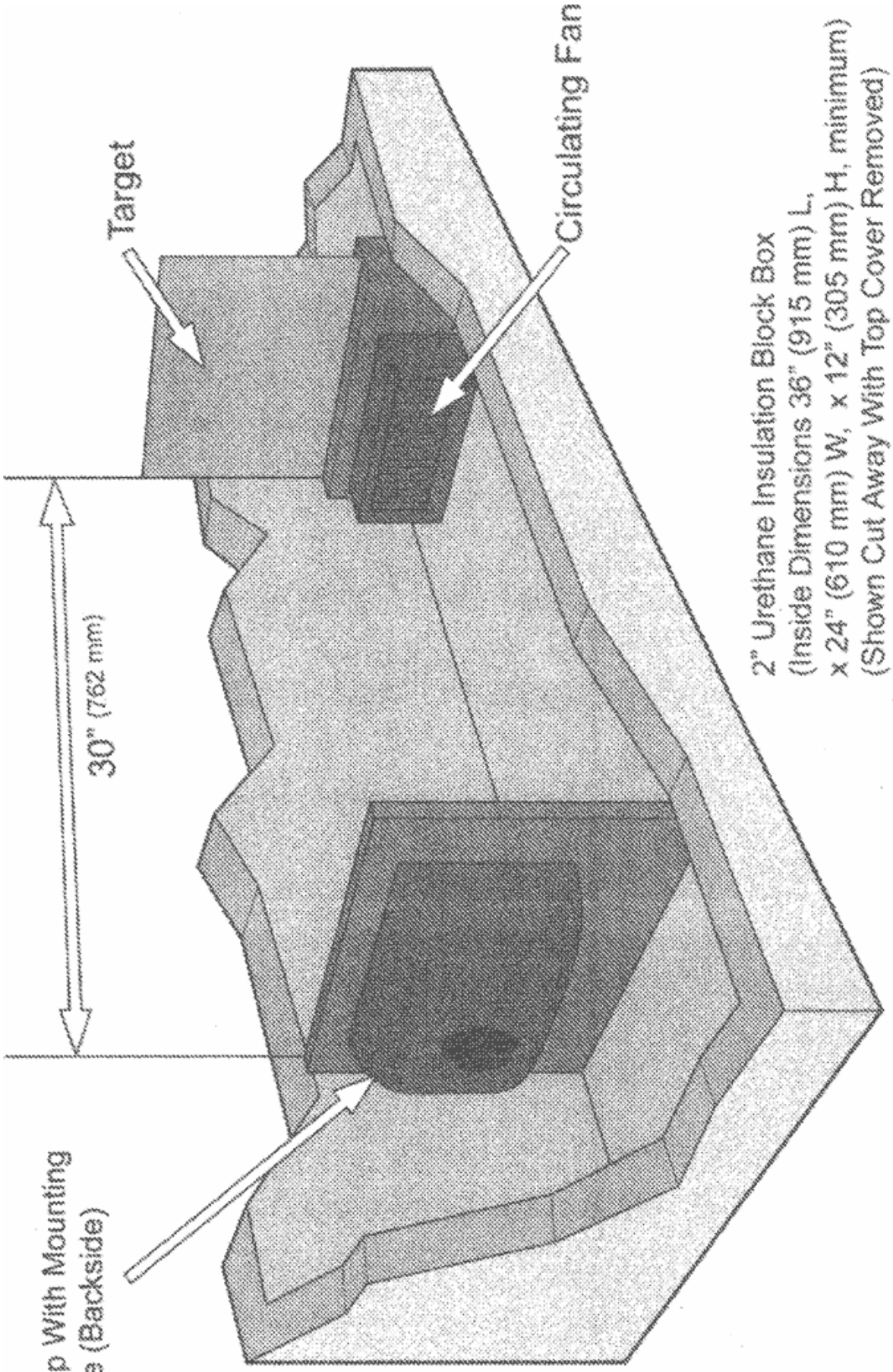

DIRT / AMBIENT TEST SETUP

FIGURE 7

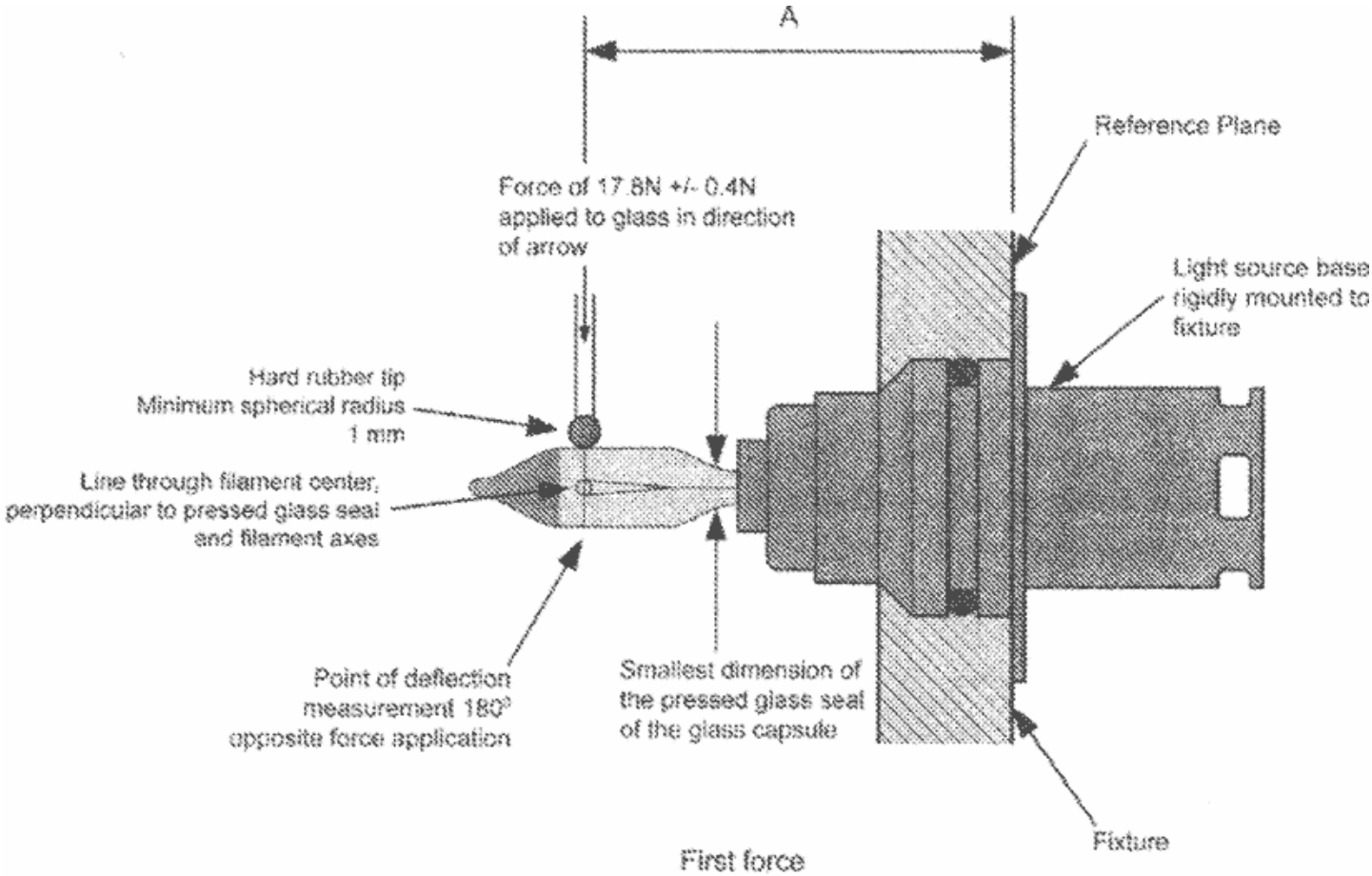

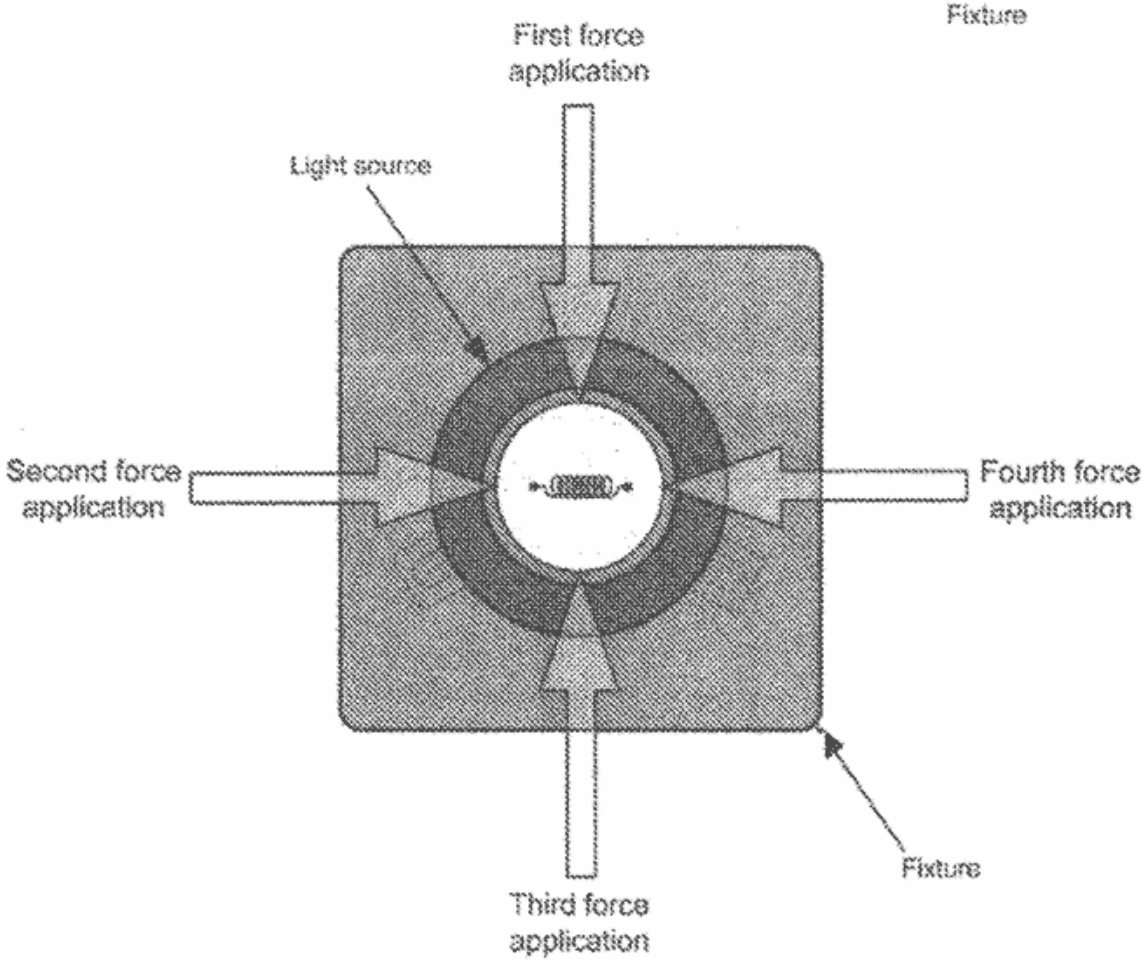

REPLACEABLE LIGHT SOURCE DEFLECTION TEST SETUP

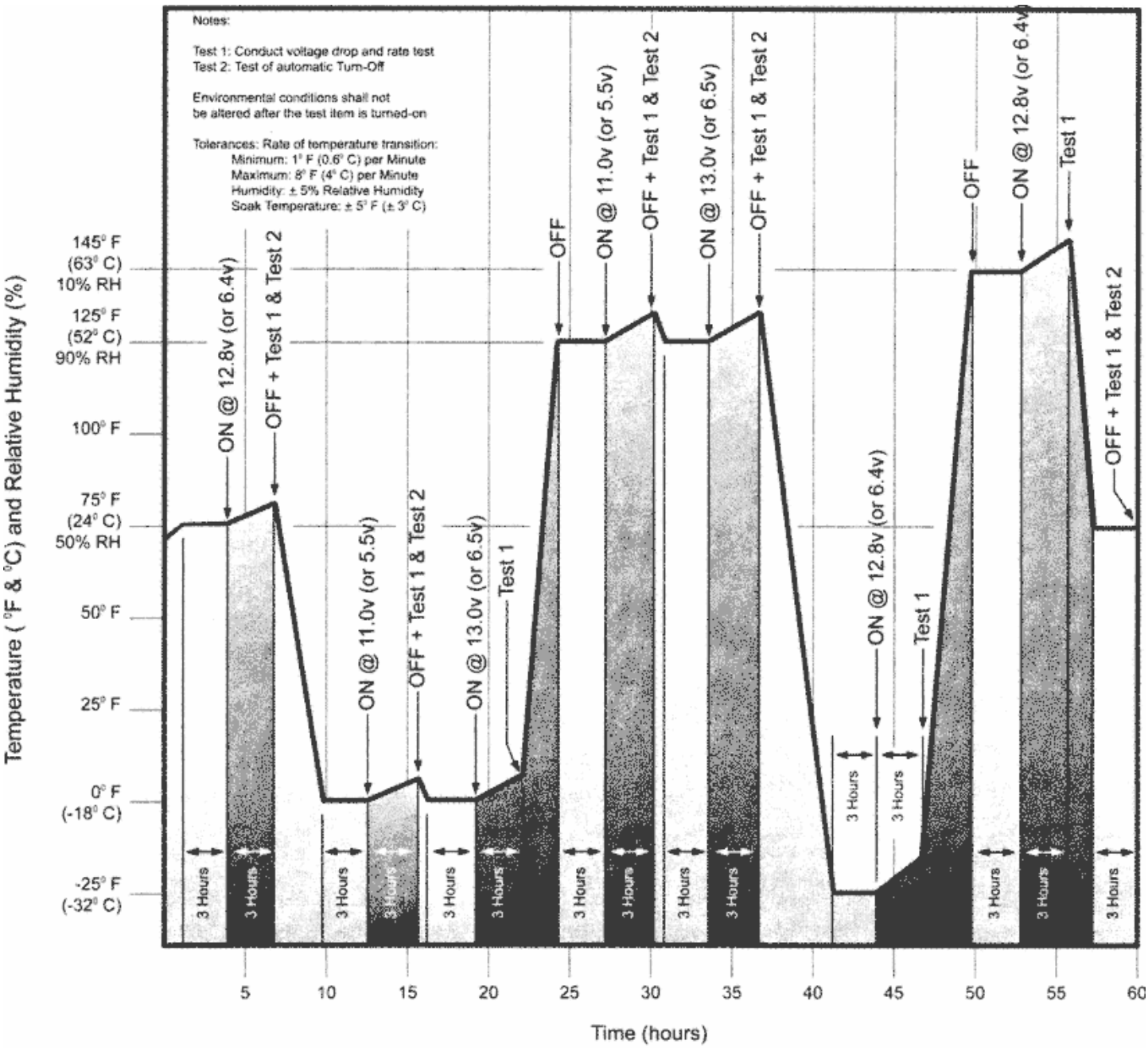

ENVIRONMENTAL TEST PROFILE

FIGURE 9

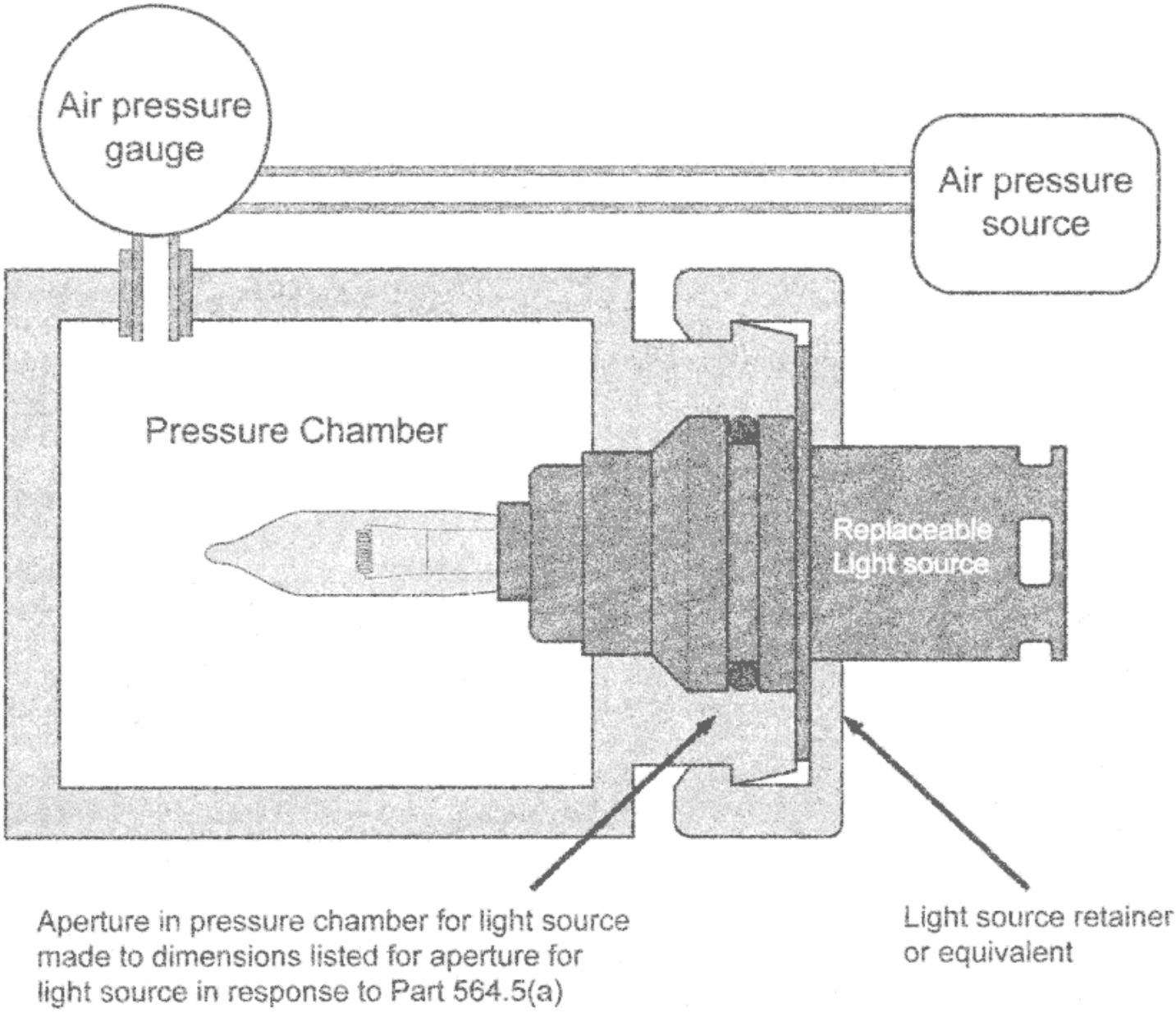

REPLACEABLE LIGHT SOURCE PRESSURE TEST SETUP

FIGURE 10

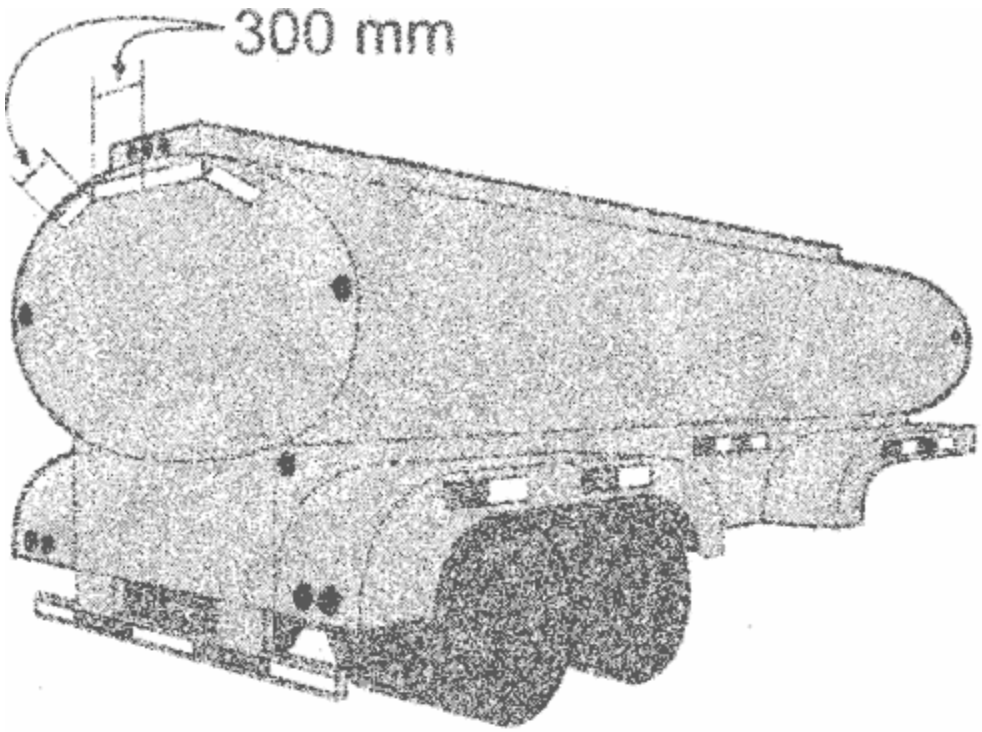
300 mm

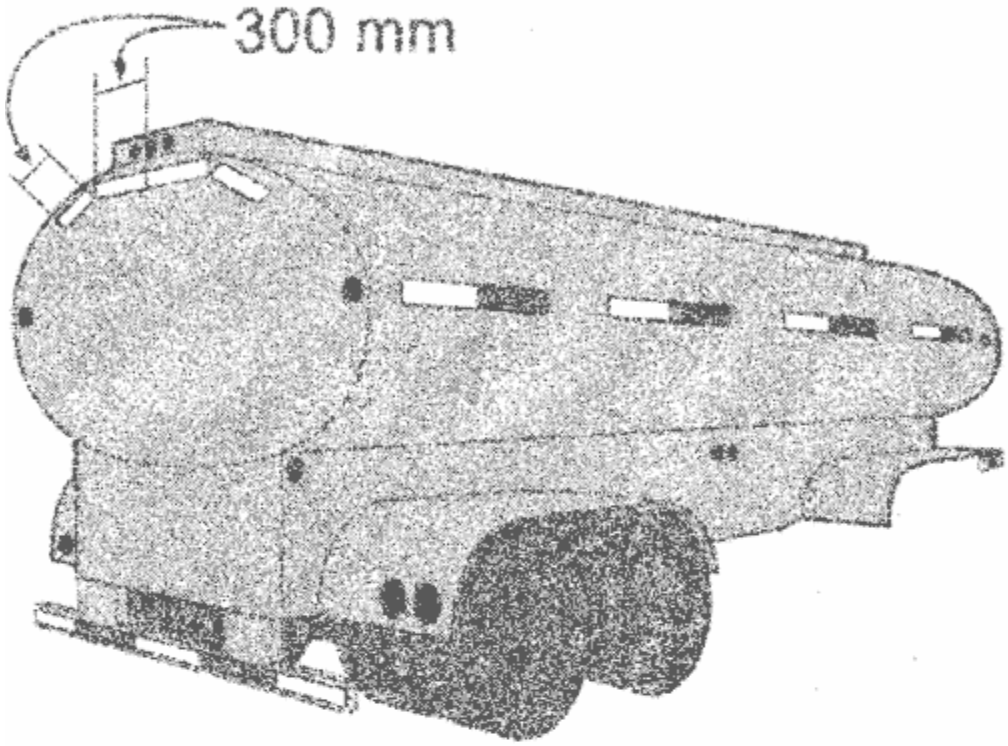
300 mm

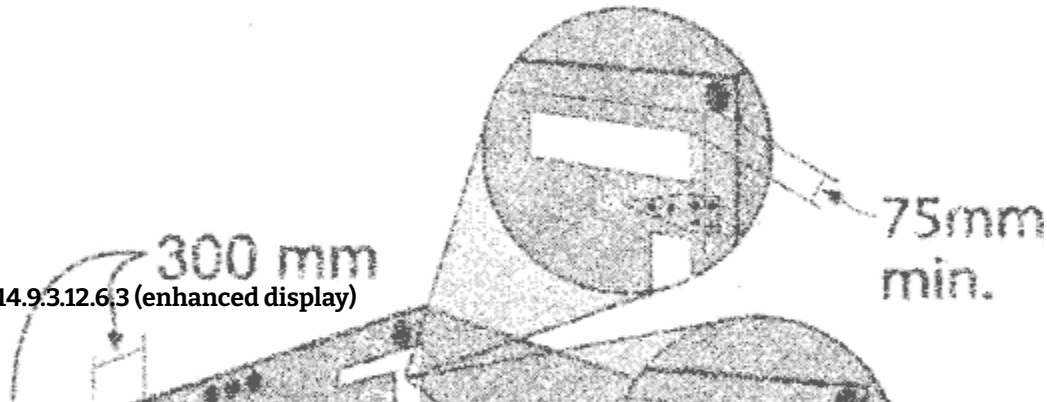
75mm
min.
300 mm

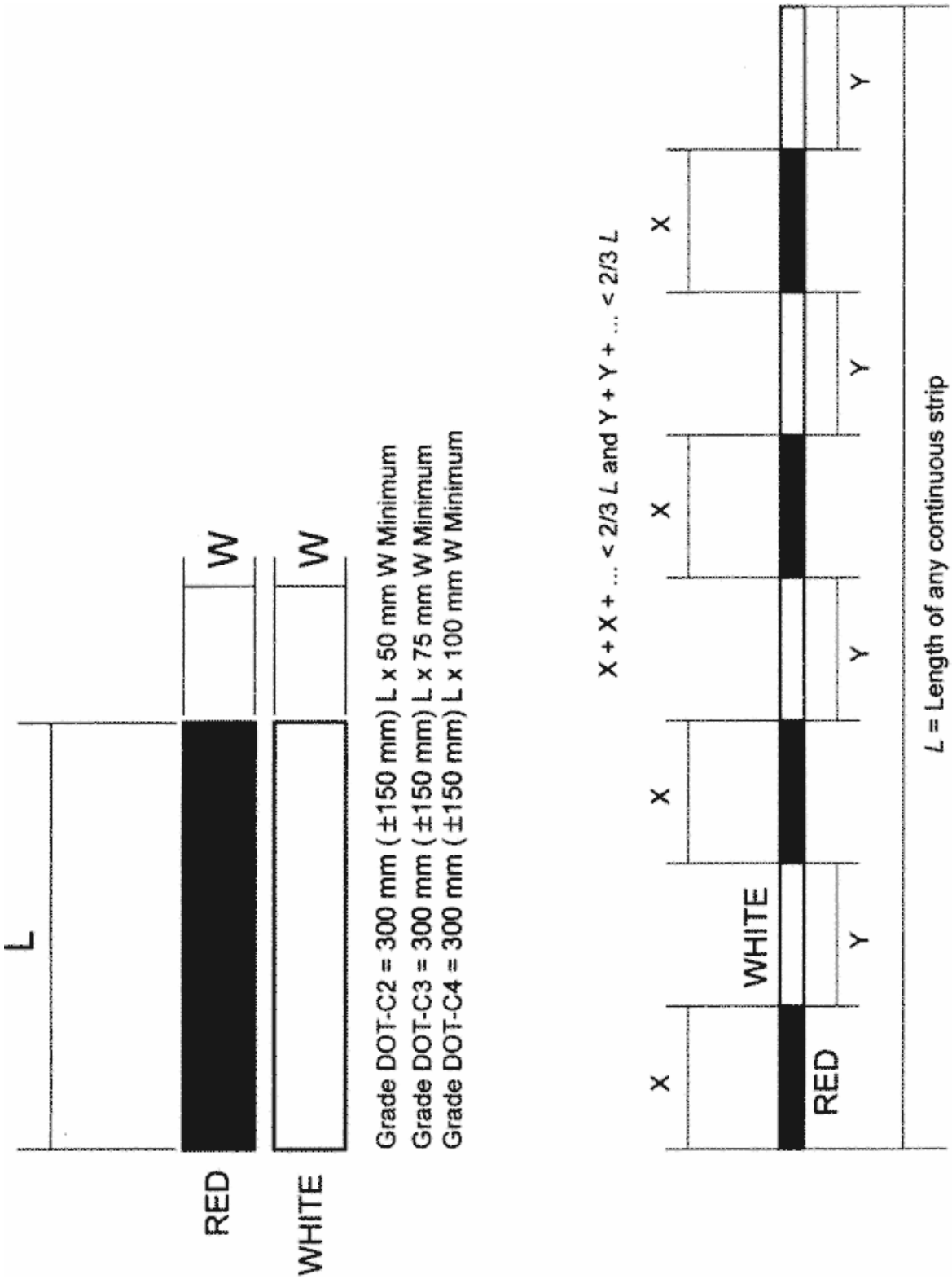

TRAILER CONSPICUITY DETAIL I

FIGURE 12-1

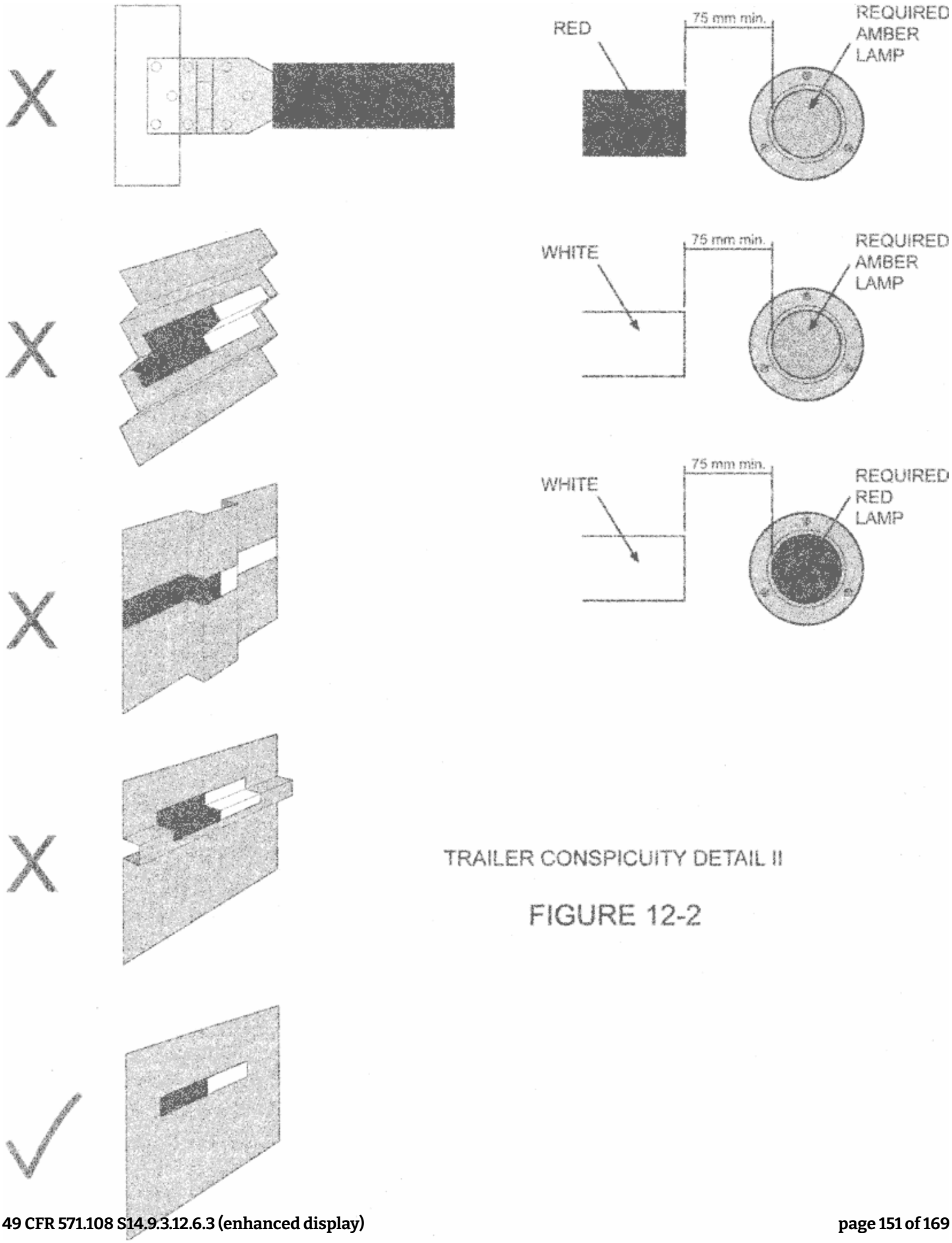

TRAILER CONSPICUITY DETAIL II

FIGURE 12-2

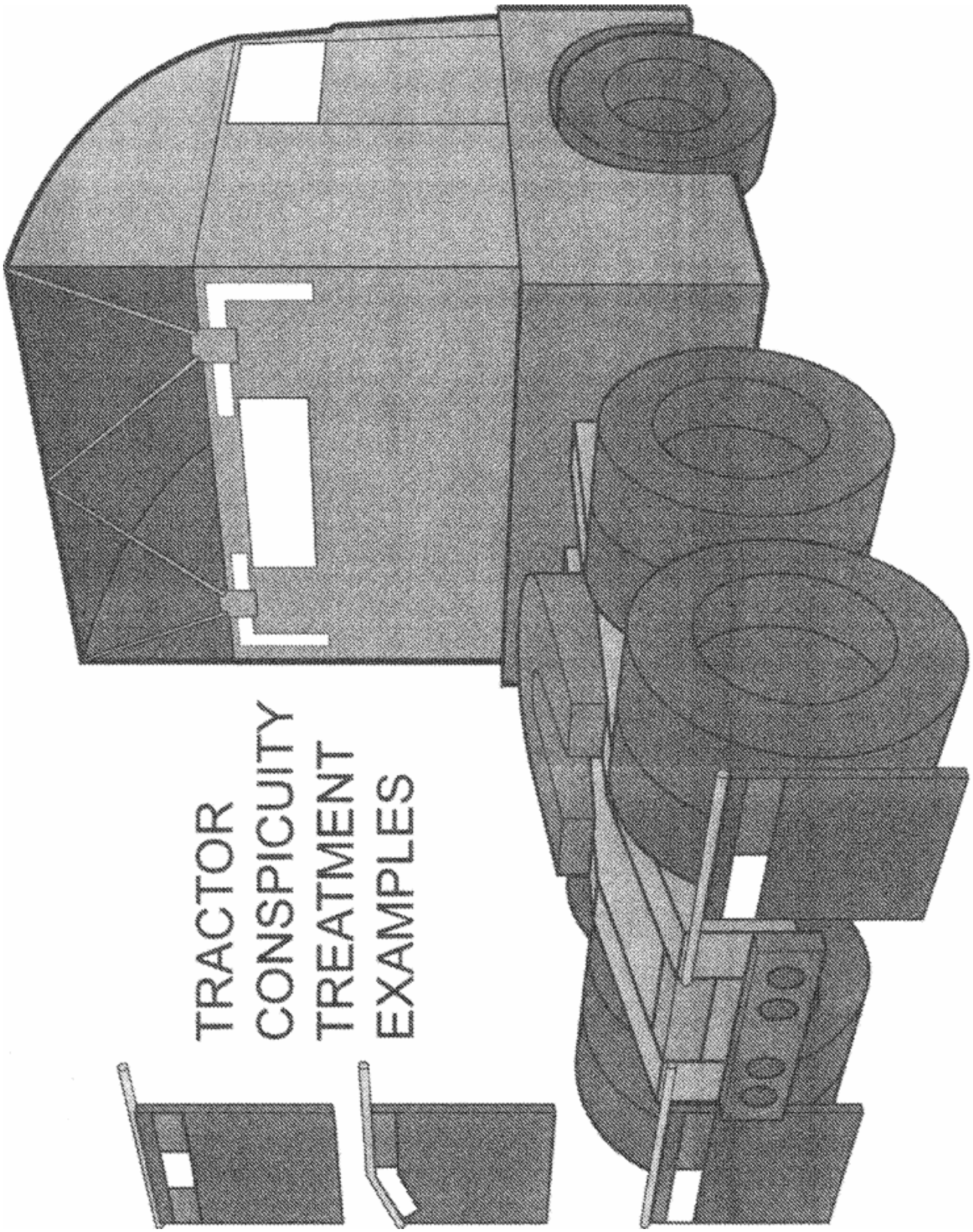

FIGURE 13

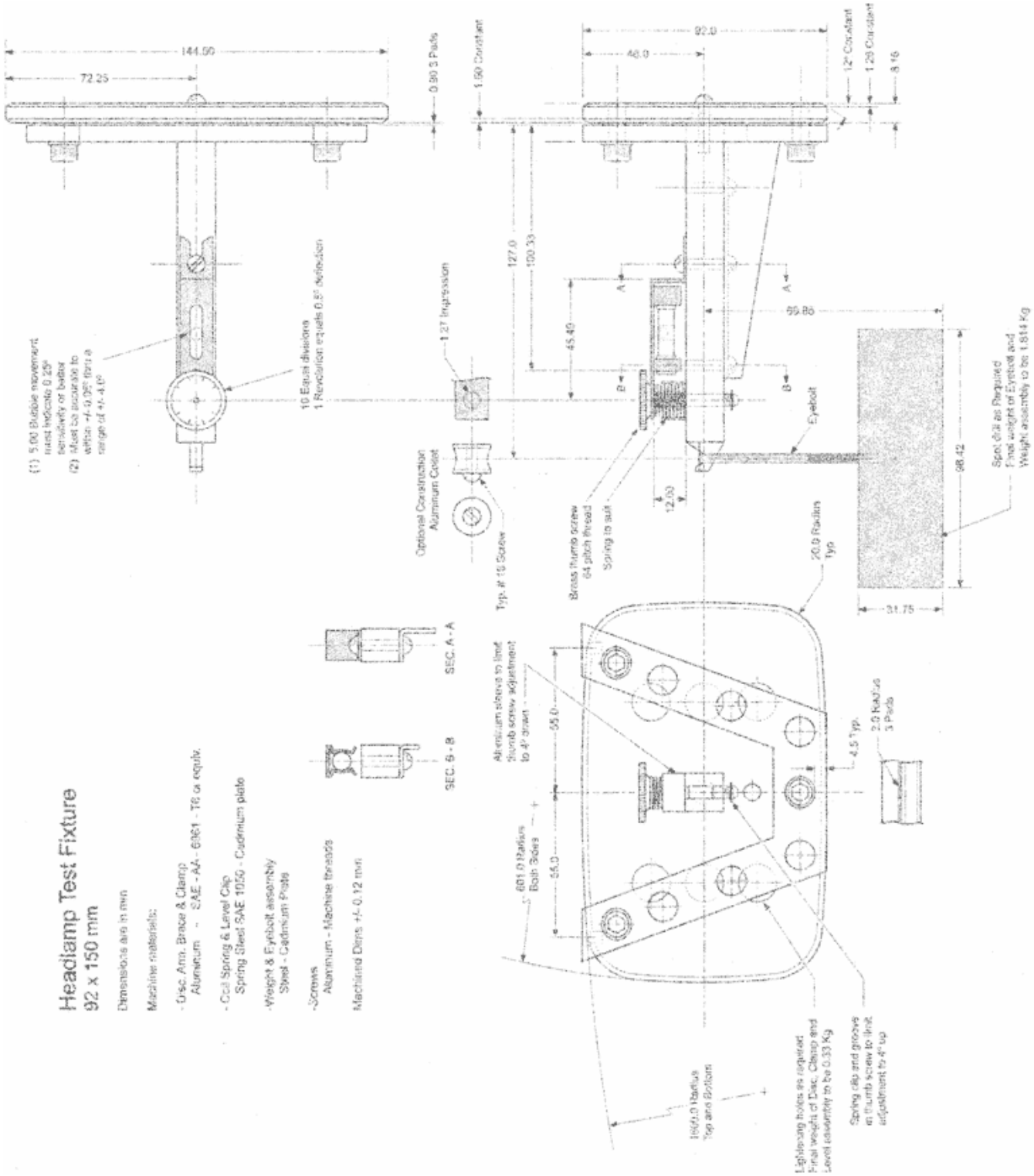

92 x 150 mm HEADLAMP AIM DEFLECTION TEST SETUP

FIGURE 14

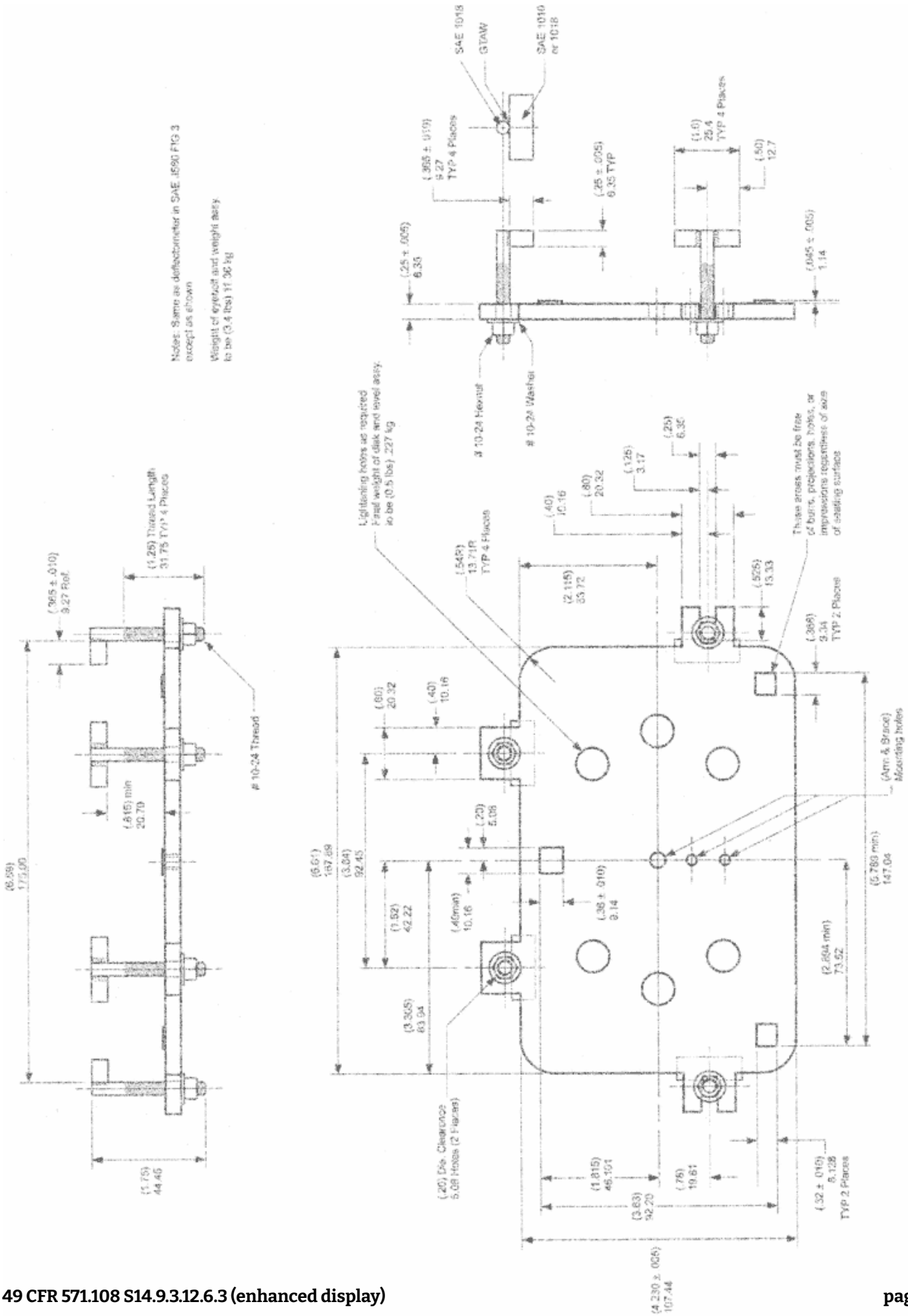

TYPES G AND H HEADLAMP AIM DEFLECTION TEST SETUP

FIGURE 15

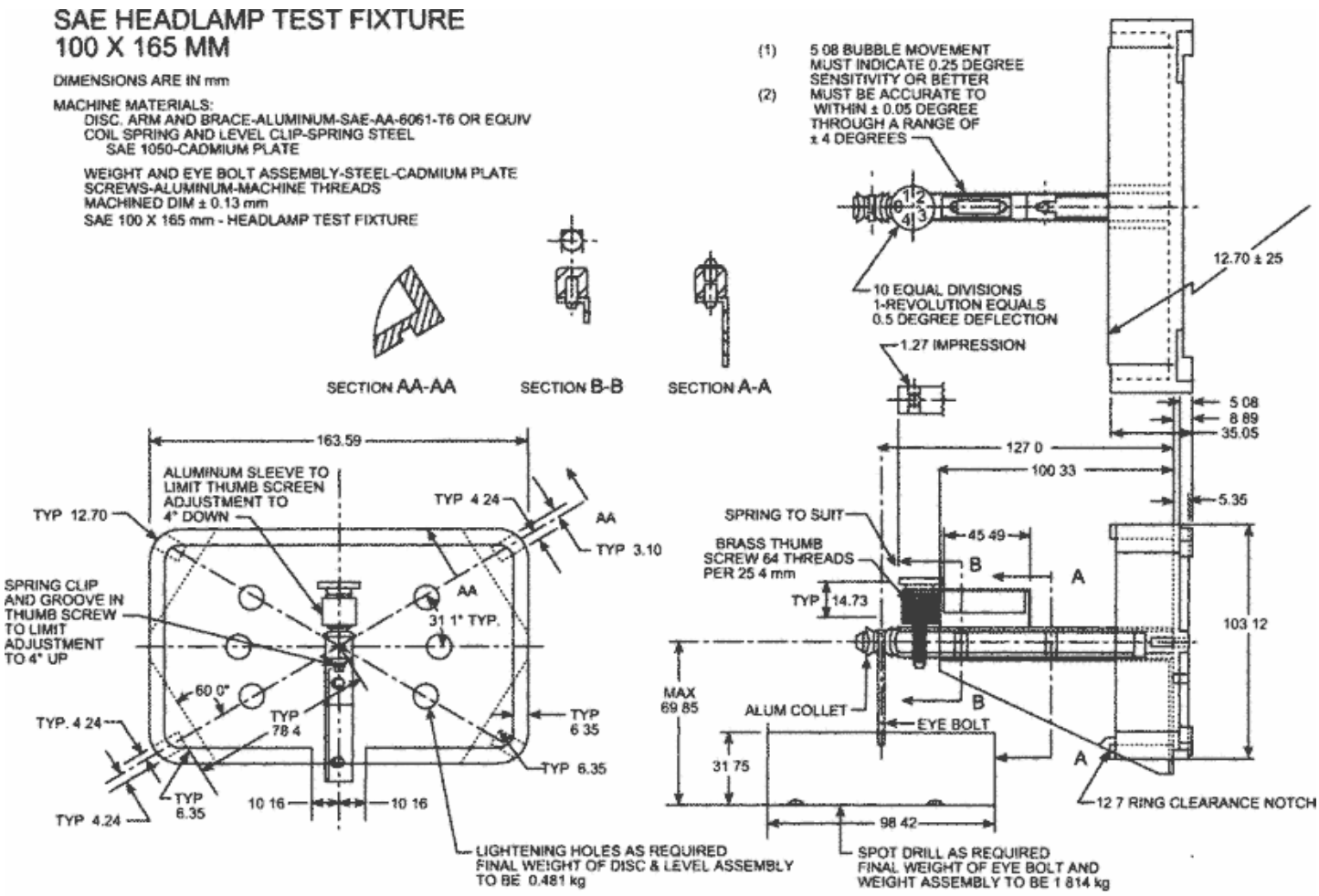

TYPES A AND E HEADLAMP AIM DEFLECTION TEST SETUP

FIGURE 16

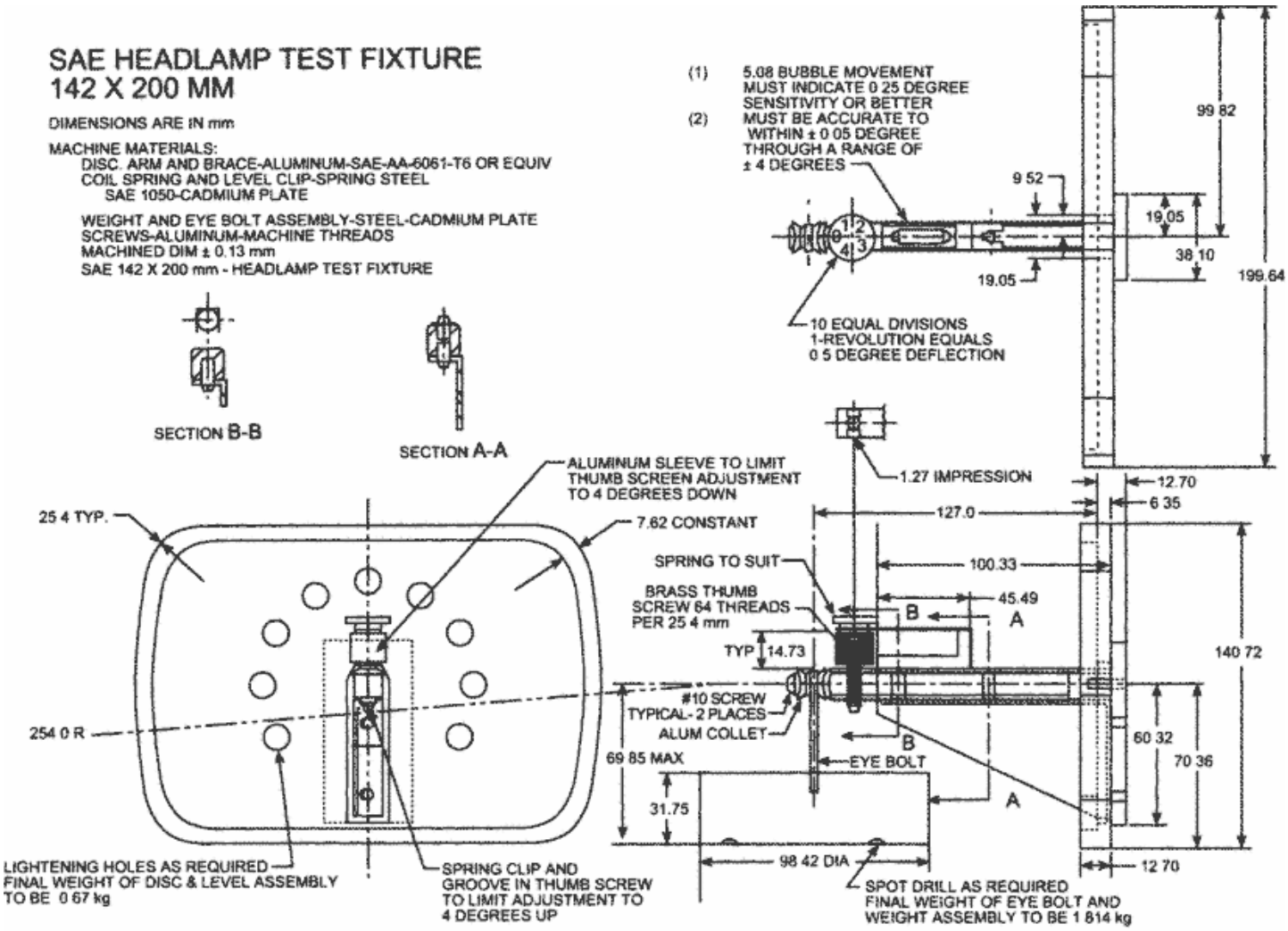

TYPE B HEADLAMP AIM DEFLECTION TEST SETUP

FIGURE 17

UNIT	A DIM	B DIM
SAE 5.75	144 53	134 62
SAE 7 00	178 31	168 66

(1) 5 08 BUBBLE MOVEMENT MUST INDICATE 0.25 DEGREE SENSITIVITY OR BETTER
(2) MUST BE ACCURATE TO WITHIN ± 0 05 DEGREE THROUGH A RANGE OF ± 4 DEGREES

DIMENSIONS ARE IN mm

MACHINE MATERIALS.
DISC. ARM AND BRACE-ALUMINUM-SAE-AA-6061-T6 OR EQUIV
COIL SPRING AND LEVEL CLIP-SPRING STEEL
SAE 1050-CADMIUM PLATE

WEIGHT AND EYE BOLT ASSEMBLY-STEEL-CADMIUM PLATE
SCREWS-ALUMINUM-MACHINE THREADS
MACHINED DIM ± 0.13 mm
SAE 146 AND SAE 178 - HEADLAMP TEST FIXTURE

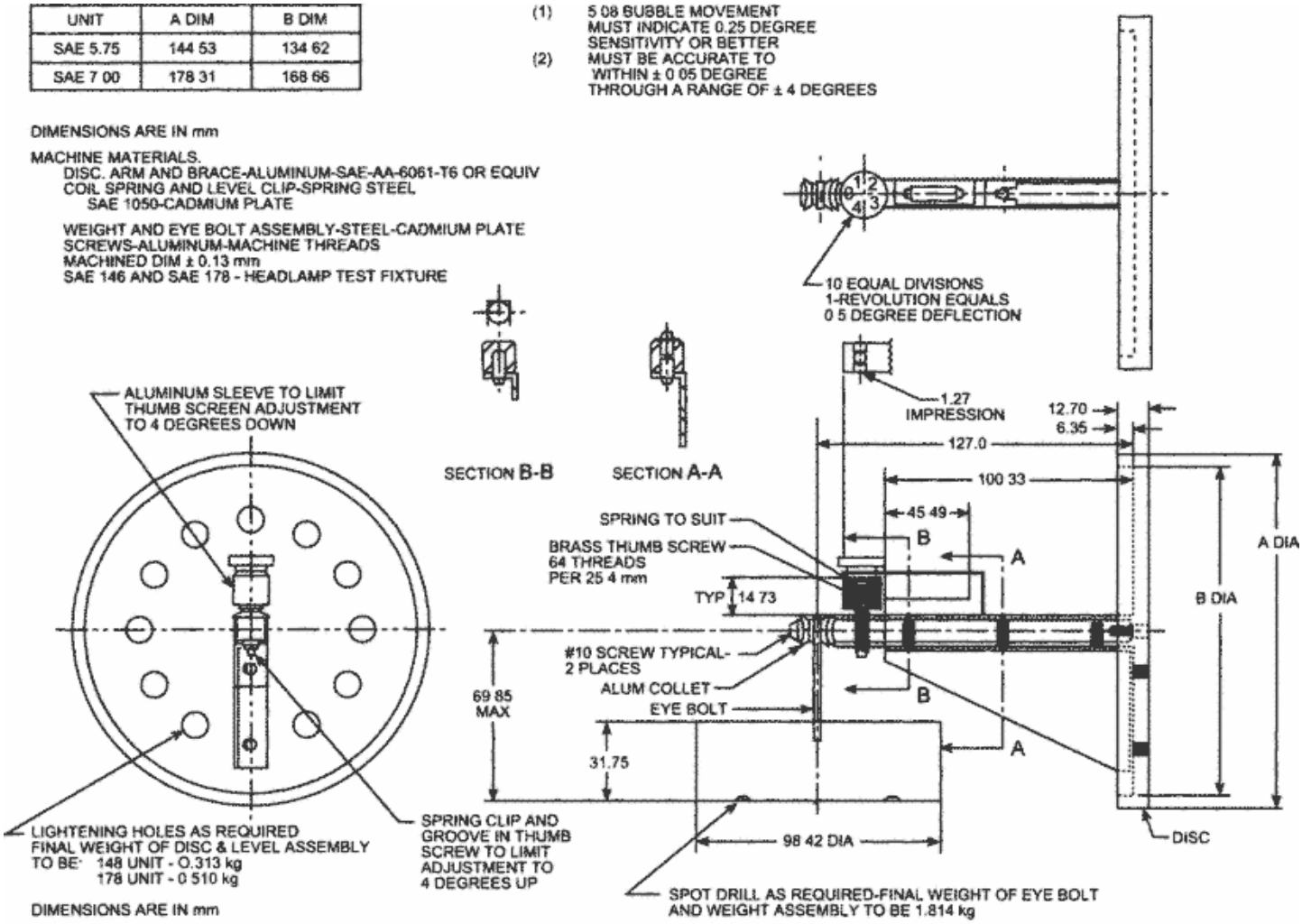

TYPES C AND D HEADLAMP AIM DEFLECTION TEST SETUP

FIGURE 18

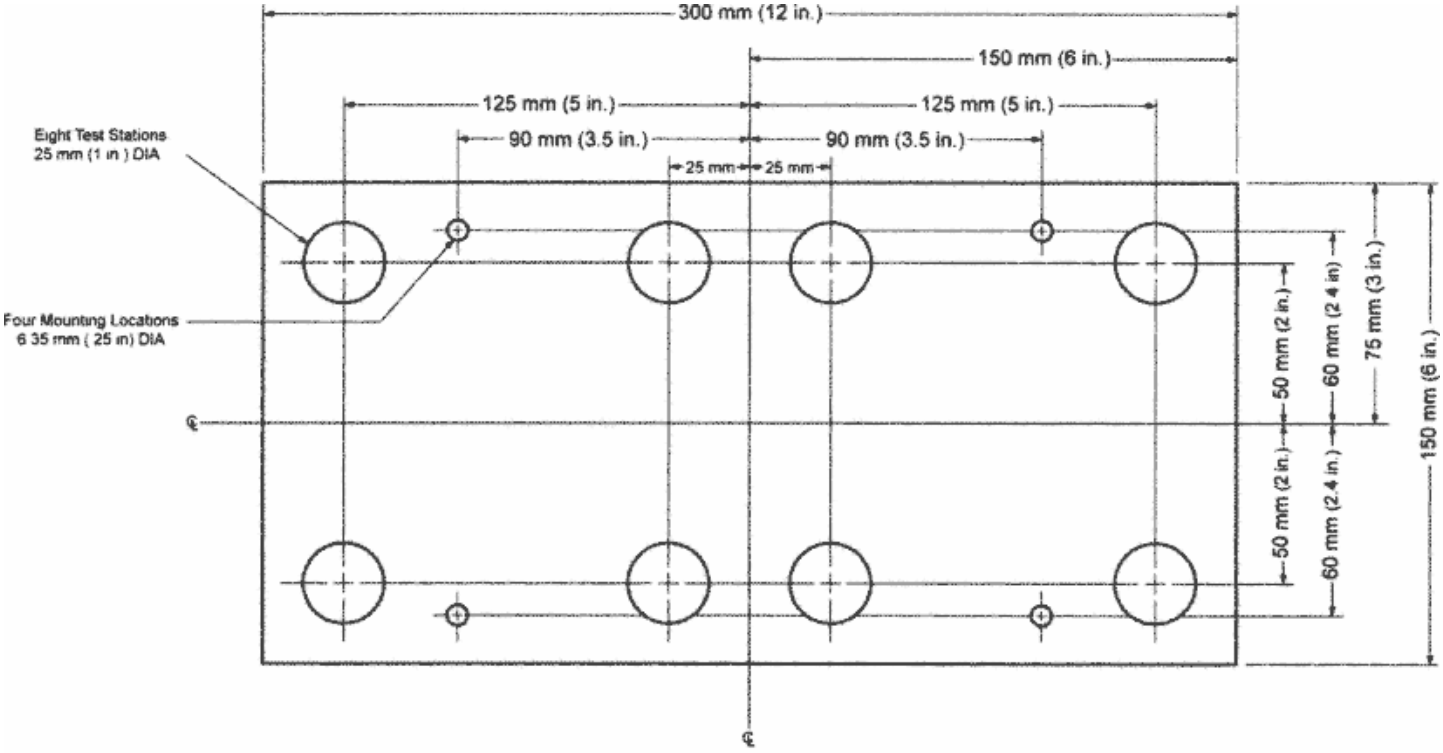

Test Plate for Vehicles other than Motorcycles and Motor Driven Cycles

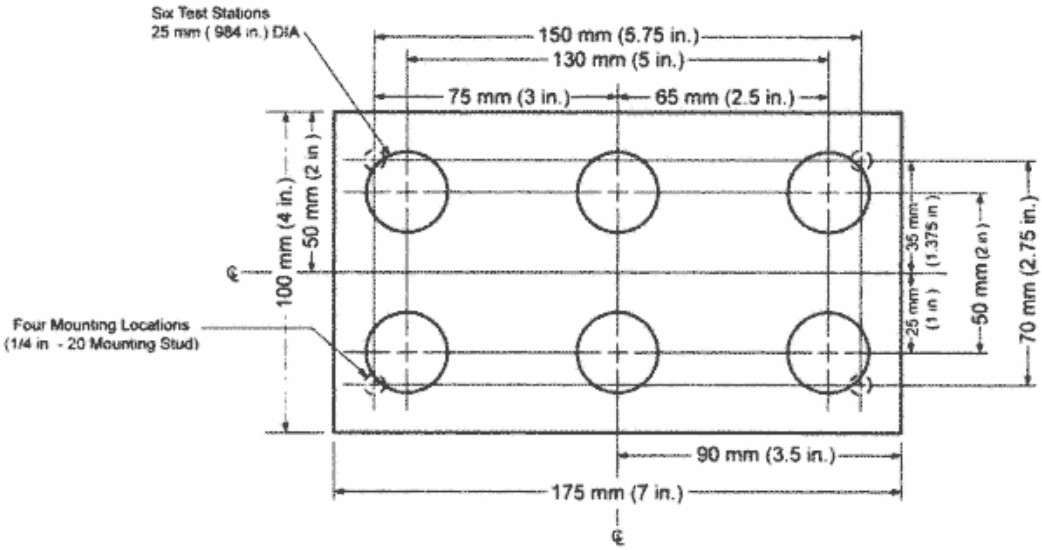

Test Plate for Motorcycles and Motor Driven Cycles

LICENSE PLATE LAMP TARGET LOCATIONS

FIGURE 19

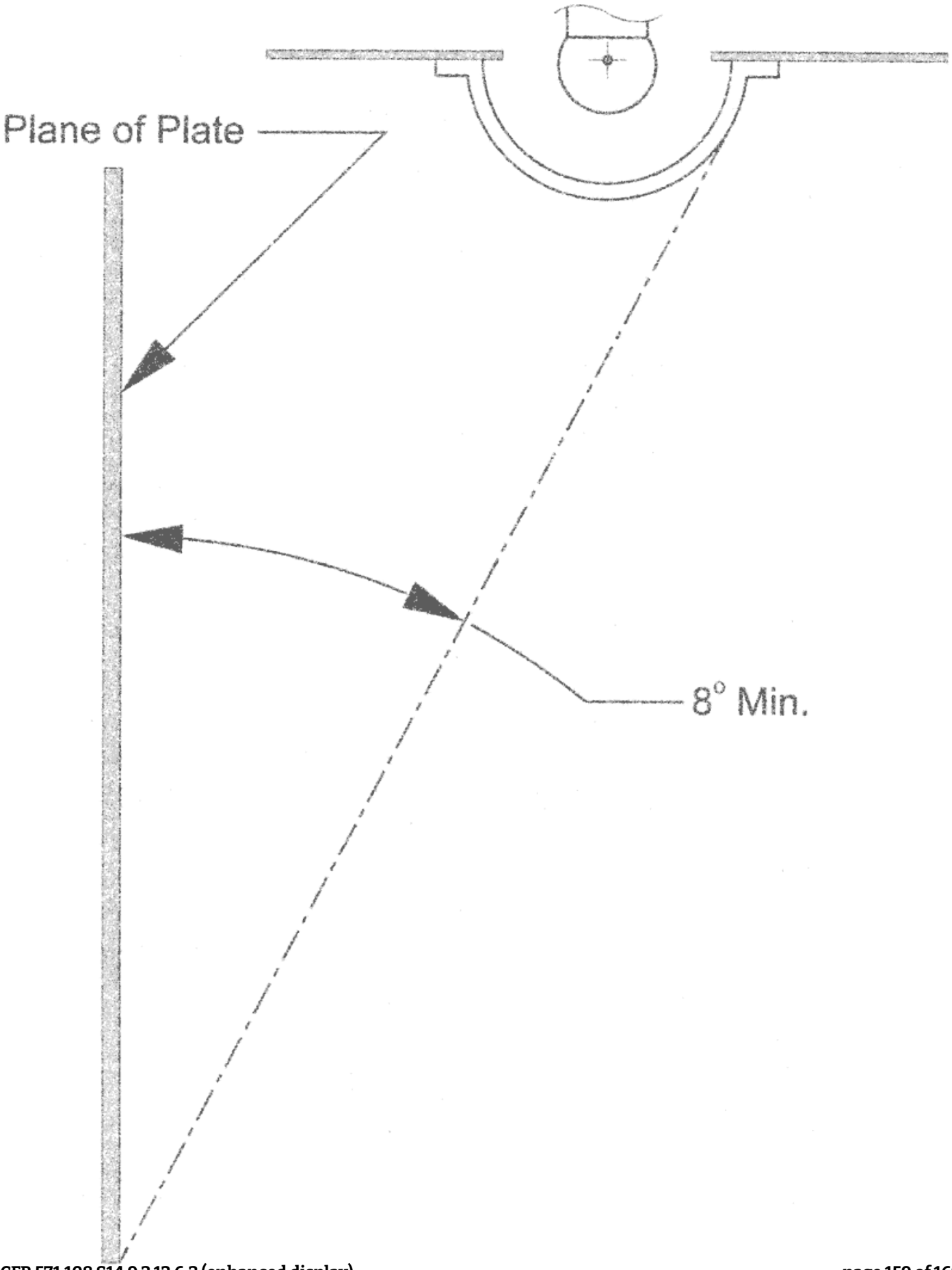

License Plate Lamp Measurement of Incident Light Angle

CAM PROFILE RADII*

Point	Radius, in.	Point	Radius, in.	Point	Radius, in.	Point	Radius, in.
1	0.5000	6	0.5504	11	0.6284	16	0.7064
2	0.5000	7	0.5660	12	0.6440	17	0.7220
3	0.5086	8	0.5816	13	0.6596	18	0.7376
4	0.5192	9	0.5972	14	0.6752	19	0.7466
5	0.5348	10	0.6128	15	0.6908	20	0.7500

* The cam width is between 1/2 and 1 in.

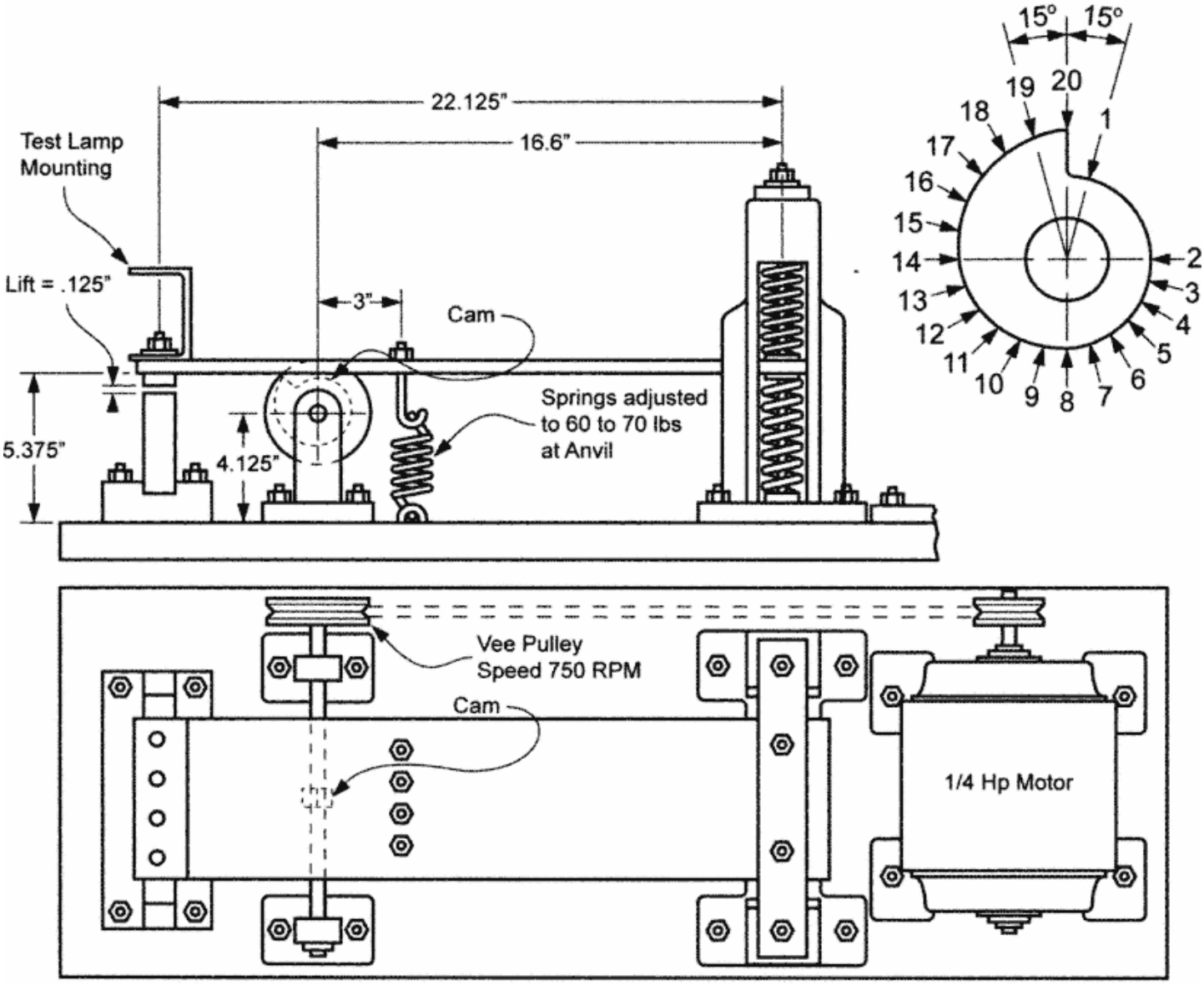

FIGURE 21 VIBRATION TEST MACHINE

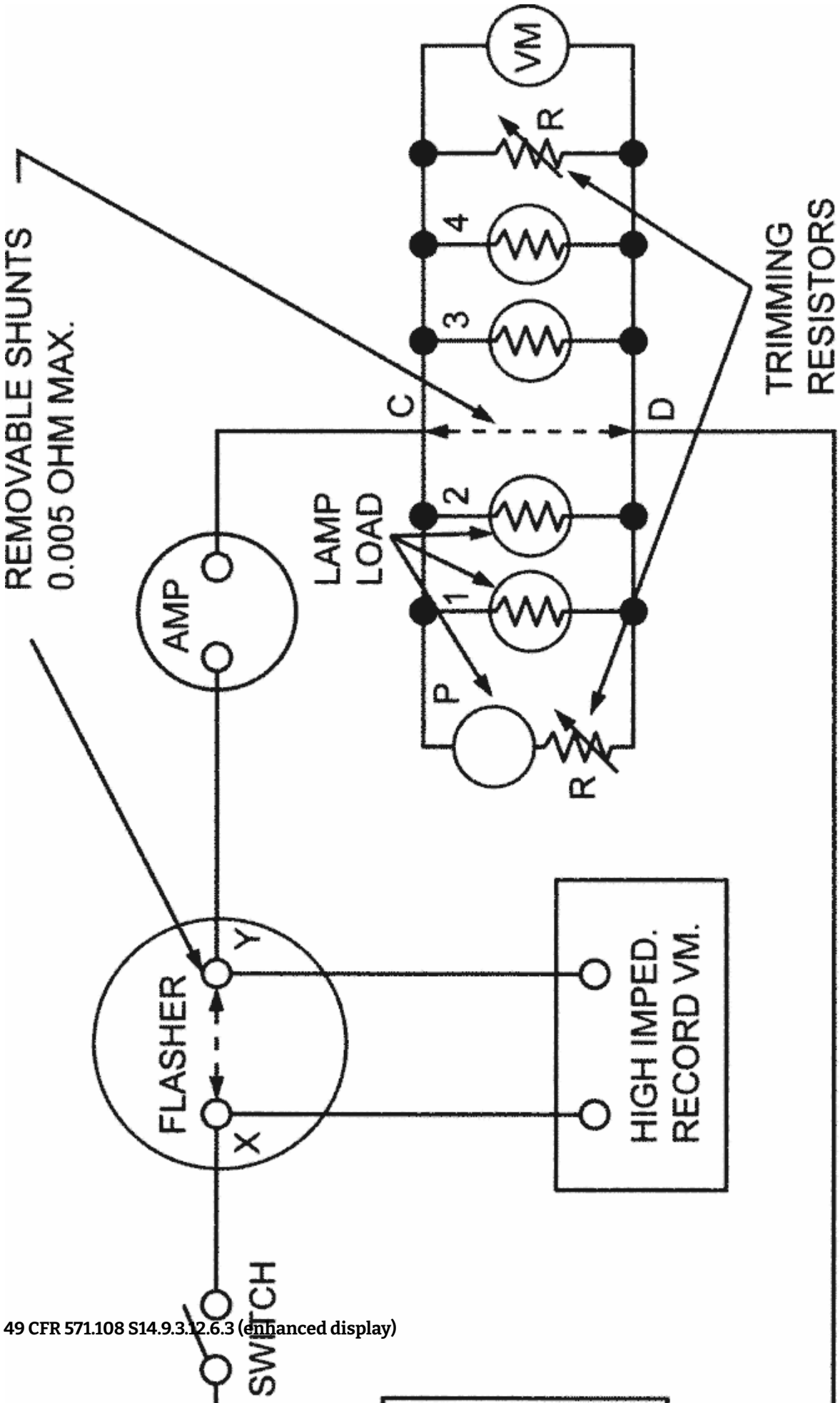

FLASHER STANDARD TEST CIRCUIT
FIGURE 22

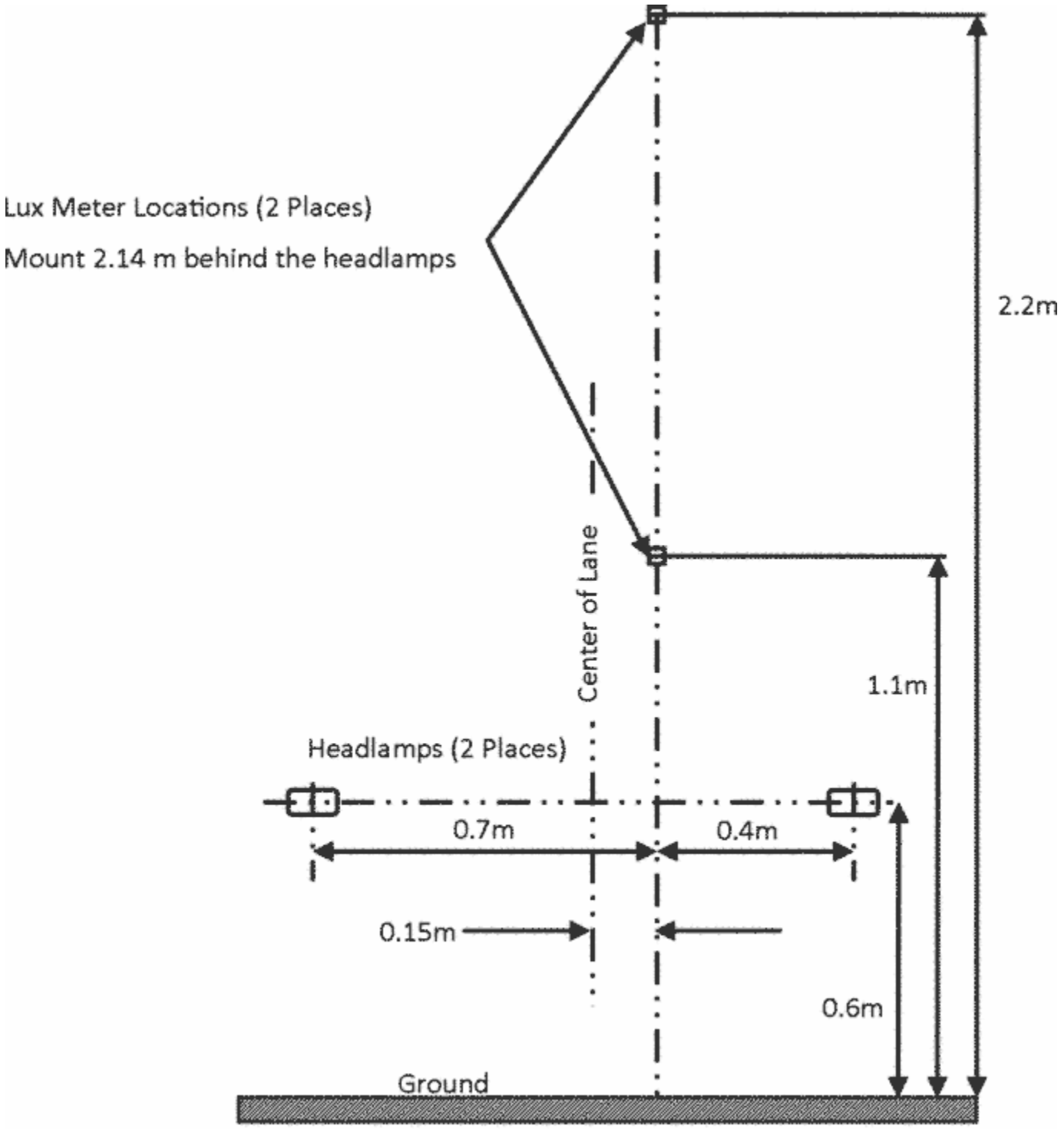

Car / Truck opposite direction stimulus test fixture dimensions

Figure 23

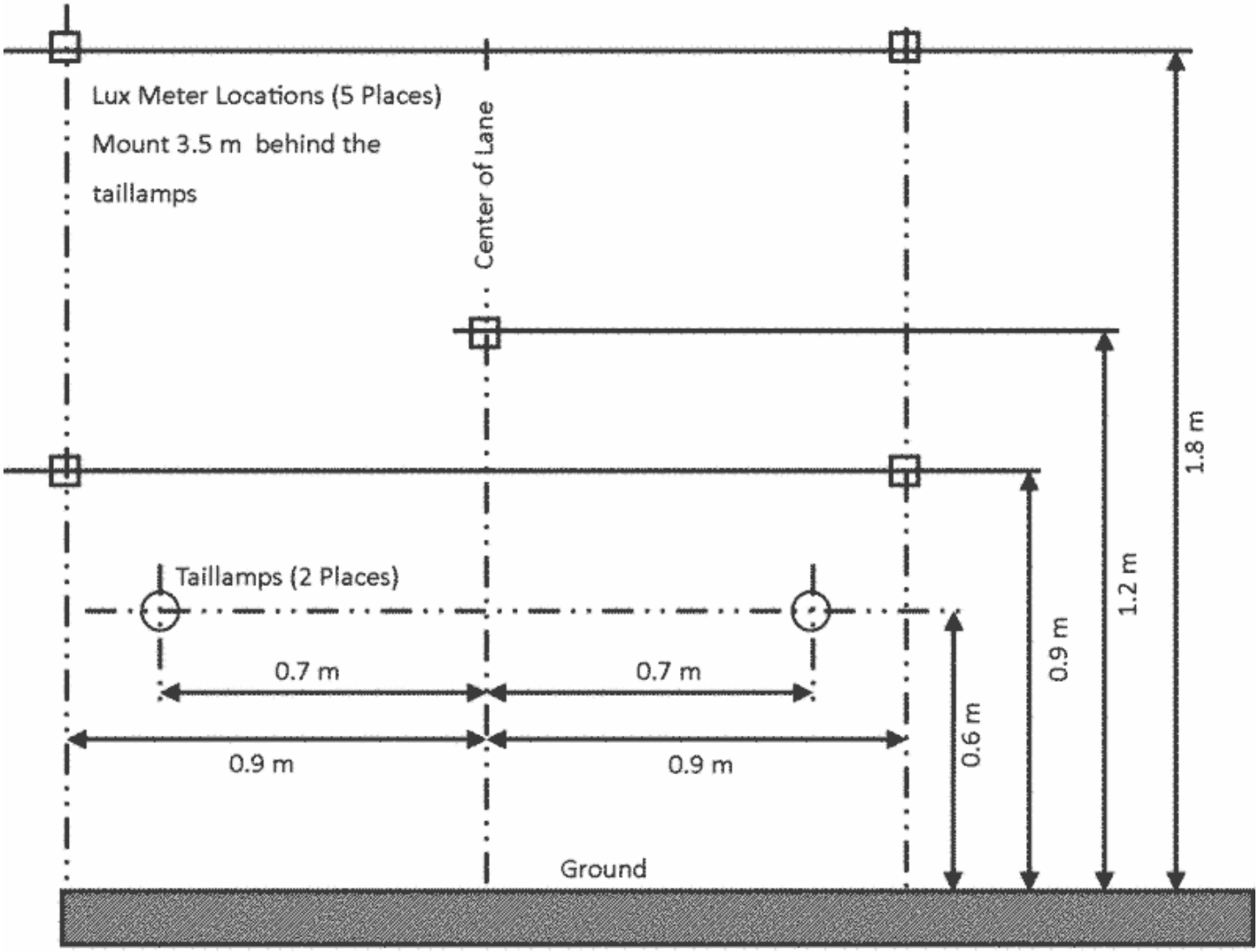

Car / Truck same direction stimulus fixture dimensions

Figure 24

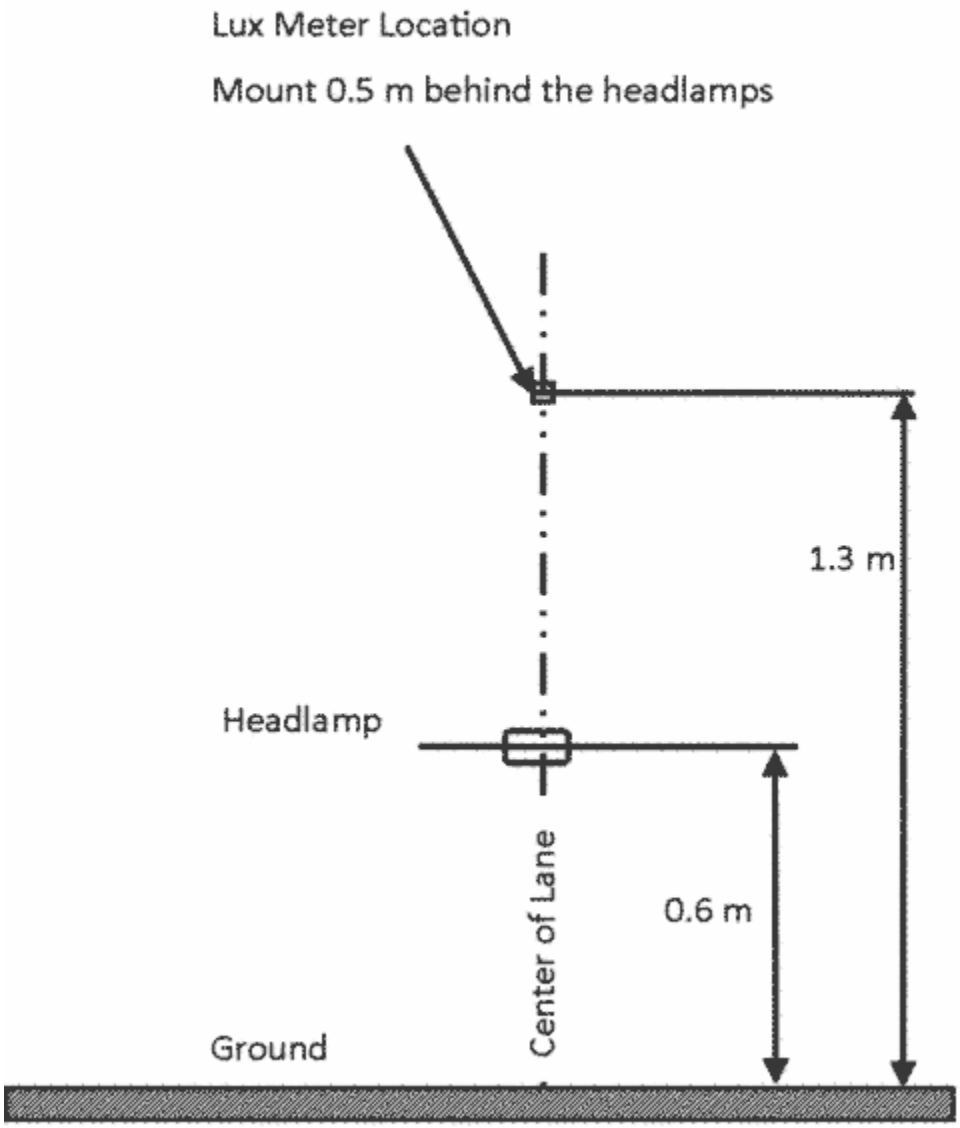

Motorcycle opposite direction stimulus test fixture dimensions

Figure 25

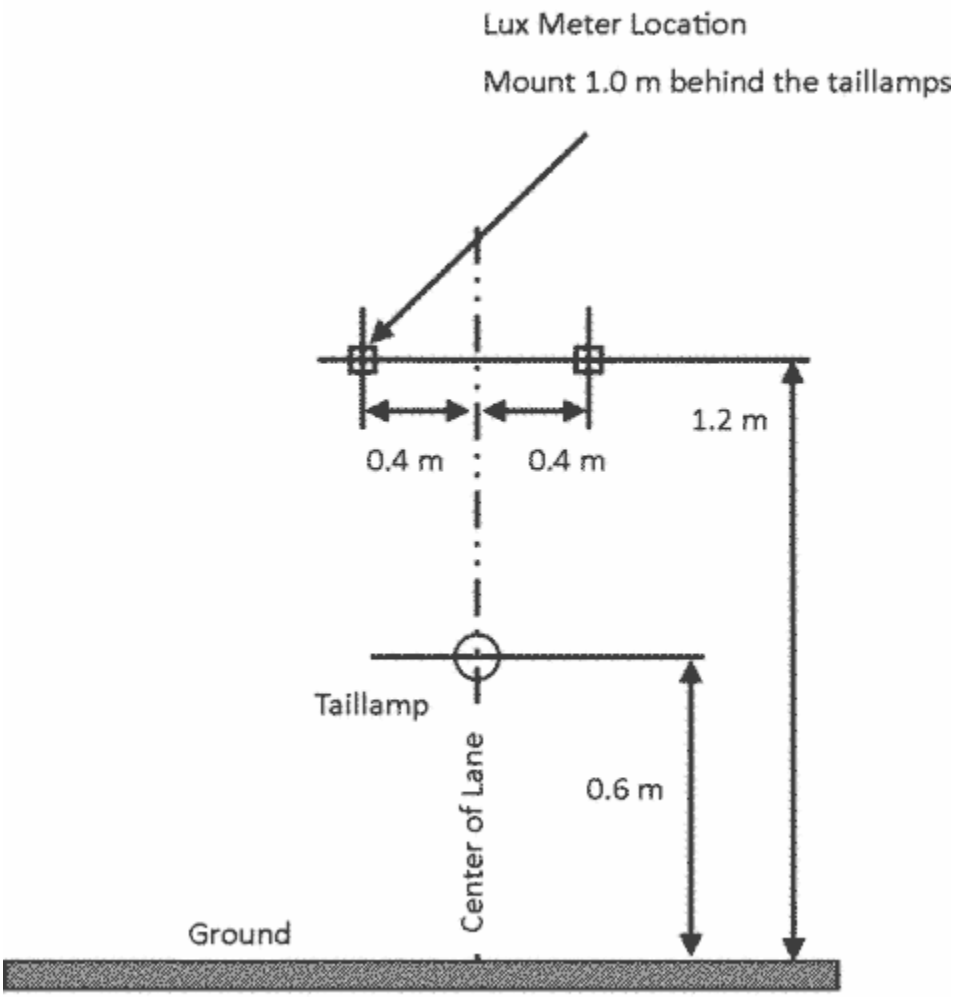

Motorcycle same direction stimulus test fixture dimensions

Figure 26

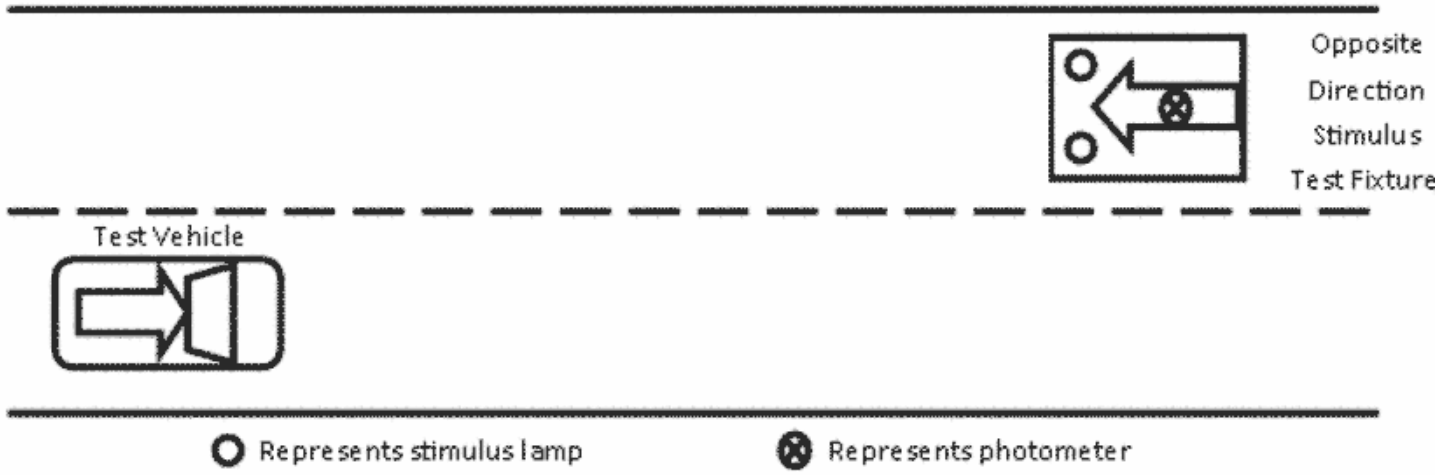

Not to scale. For illustrative purposes only.

Figure 27 Opposite Direction Test Scenarios

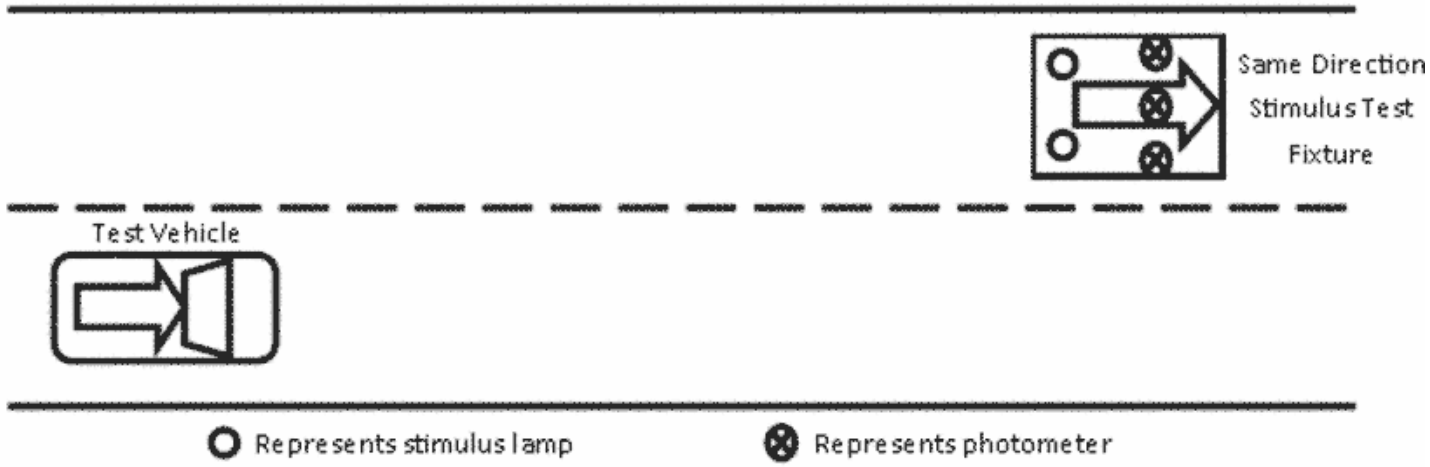

Not to scale. For illustrative purposes only.

Figure 28 Same Direction Test Scenarios

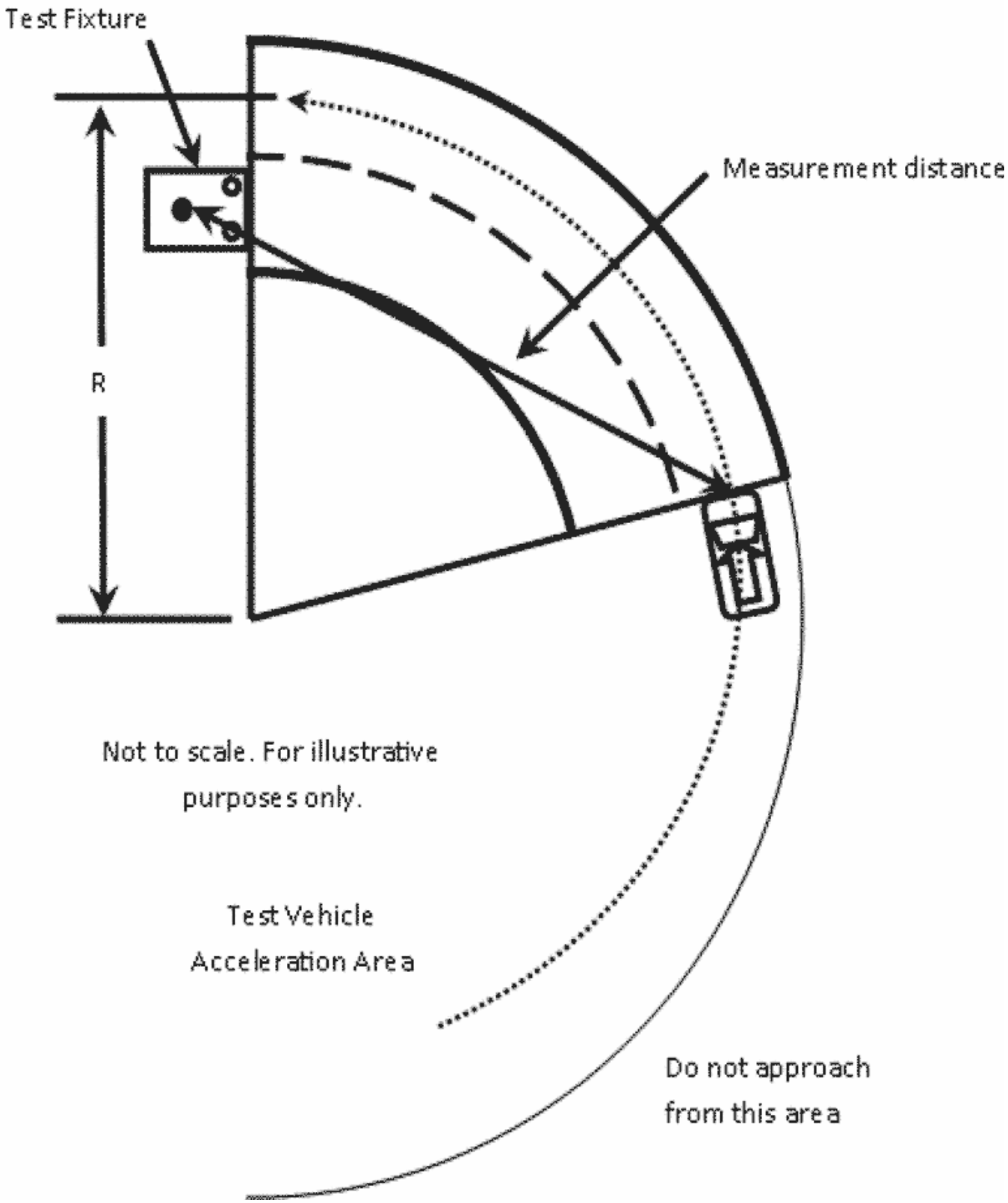

Figure 29 Left Curve Test Scenarios

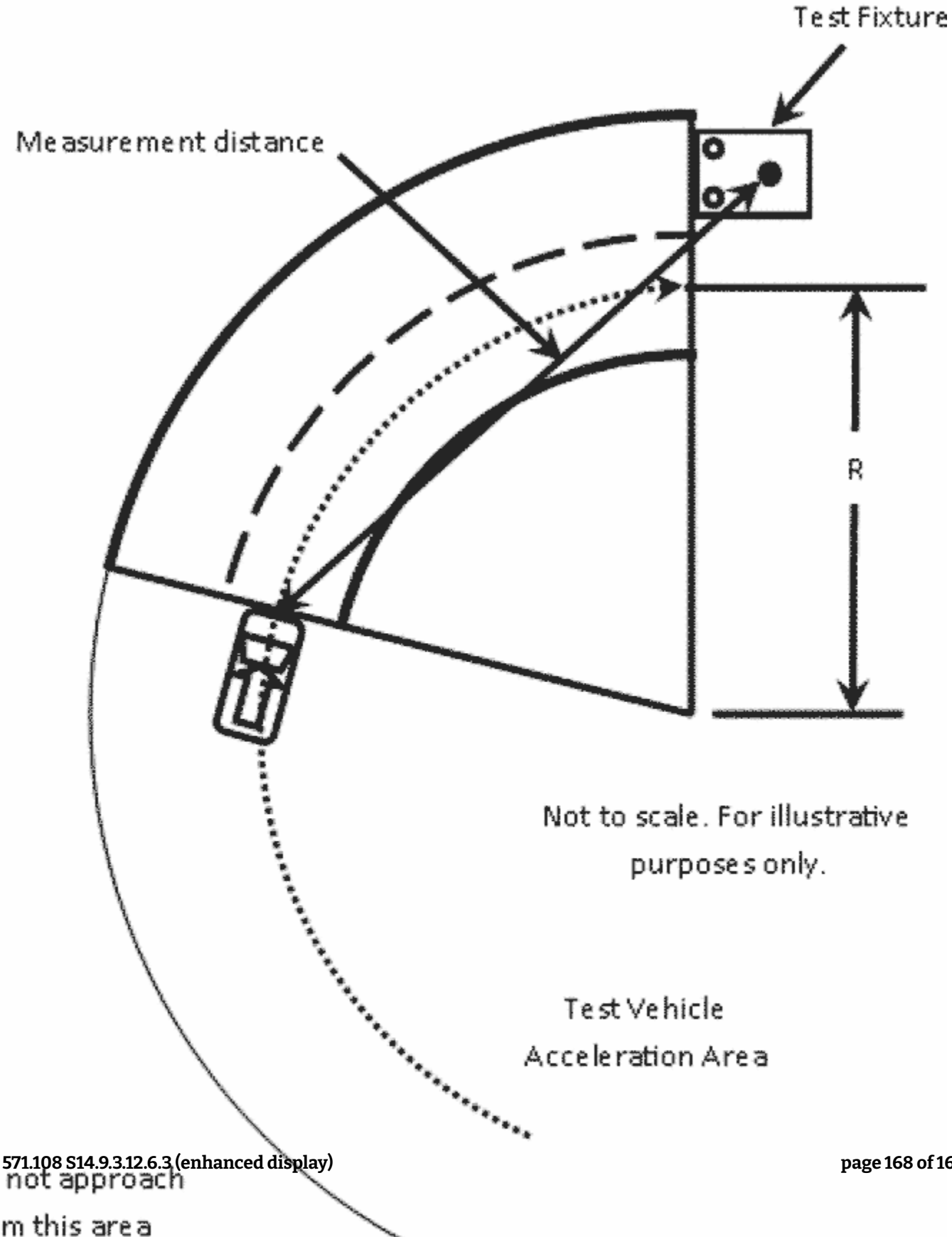

[72 FR 68269, Dec. 4, 2007, as amended at 76 FR 23510, Apr. 27, 2011; 76 FR 48023, Aug. 8, 2011; 77 FR 757, Jan. 6, 2012; 77 FR 71720, Dec. 4, 2012; 80 FR 78669, Dec. 17, 2015; 81 FR 6458, Feb. 8, 2016; 87 FR 10021, Feb. 22, 2022]