UNITED STATES PATENT AND TRADEMARK OFFICE

_____

BEFORE THE PATENT TRIAL AND APPEAL BOARD

_____

VOLKSWAGEN GROUP OF AMERICA, INC.,
Petitioner,

v.

YECHEZKAL EVAN SPERO,
Patent Owner.

_____

U.S. Patent No. 9,955,551 to Spero

Case No.: IPR2023-00315

_____

SECOND DECLARATION OF MATTHEW A. TURK PhD

VWGoA EX1070
VWGoA v. Spero
IPR2023-00328

TABLE OF CONTENTS

List of Exhibits 4

I. Qualifications and Professional Experience 7

II. Relevant Legal Standards 13

III. State of the Art as of 2002 14

- A. POSA Considerations for LED Forward Lighting 14
- B. Regulations and Standards 15
- C. Design Tradeoffs 21
- D. Hardware 26
- E. Optical System 27
- F. Spatial Light Modulator 30
- G. Heat management 34
- H. Packaging 36
- I. Cost 37

IV. Overview of the '551 Patent 38

V. Qualifications of one of ordinary skill in the art 65

VI. Proposed Claim Constructions 66

VII. Overview of the Prior Art 66

- A. Beam: U.S. Patent No. 6,144,158 66
- B. Satonaka 73
- C. Kobayashi: U.S. Patent No. 6,049,749 78
- D. Gotou: U.S. Patent No. 5,588,733 82
- E. Karlsson: PCT Application Pub. No. WO1998/054030 85
  - 1. Karlsson's Window 50 Depicts Illumination Being Reduced for Situational Glare 86
  - 2. The Base Device That Karlsson Improves Takes A Similar Approach To Situationally Reducing Full Emission 92
- F. Nakamura 93

VIII. Claims 32, 33, 41 and 48-49: The Complete Omission of Elements Constitutes a Fatal Failure of Proof Under 35 U.S.C. § 312(a)(3) and 37 C.F.R. §§ 42.22(a)(2) 94

- A. Claim 32 94

B. Claim 33 95
C. Claim 41 95
D. Claim 48 96
E. Claim 49 96

IX. Grounds for Challenge.....96

A. Ground 1 – Beam and Satonaka.....96
1. Independent Claims 96
2. Dependent Claims:.....104
3. A Person of Ordinary Skill in the Art Would Not Have Been Motivated to Combine Beam and Satonaka 108
B. Ground 2 – Beam, Satonaka, and Kobayashi.....120
1. Claims: 27/35/43/51 – The Beam-Satonaka-Kobayashi Combination Does Not Teach "*non-contiguous LEDs*." 120
2. Claims: 26-29, 34-37, 42-45, 50-53 – The Beam-Satonaka-Kobayashi Combination Does Not Teach a controller enabled to "*accommodate the upcoming road curvature by adaptation of a light pattern*." 121
C. Ground 3 – Karlsson and Nakamura.....123
1. Independent Claims 123
2. Dependent Claims.....132
3. A Person of Ordinary Skill in the Art Would Not Have Been Motivated to Combine Karlsson and Nakamura 133
D. Ground 4 - Karlsson, Nakamura, and Gotou.....141
1. Claims: 26-29, 34-37, 42-45, 50-53 – The Karlsson-Nakamura-Gotou Combination Does Not Teach a controller enabled to "*accommodate the upcoming road curvature by adaptation of a light pattern*." 141
2. Claims: 27/35/43/51 – The Karlsson-Nakamura-Gotou Combination Does Not Teach the "*Non-Contiguous LEDs*" Limitation.....147
3. Claim 29: Petitioner Fails to Address the "*Sensor Data*" Limitation.....147

X. Secondary Considerations 148

XI. Conclusion 151

List of Exhibits

Exhibit No.	Description
2001	Declaration of Matthew A. Turk, PhD
2002	Curriculum Vitae of Matthew A. Turk, PhD
2003	Best Practices and FAQs for Filing Requests for Reexamination Compliant with 37 CFR 1.510 and 1.915, PTAB, May 2010
2004	Petition challenging U.S. Patent No. 9,955,551, Volkswagen Group of America, Inc. v. Yechezkal Evan Spero, IPR2023-00318, Paper 1, December 22, 2022
2005	Petition challenging U.S. Patent No. 9,955,551, Volkswagen Group of America, Inc. v. Yechezkal Evan Spero, IPR2023-00336, Paper 1, December 22, 2022
2006	Second Declaration of Matthew A. Turk, PhD
2007	Transcript of Deposition of Jianzhong Jiao, Ph.D. taken on August 2, 2023, *Volkswagen Group of America, Inc. v. Torchlight Technologies LLC,* IPR2023-01586
2008	Intentionally left blank
2009	Intentionally left blank
2010	Jianzhong Jiao and Ben Wang, "Etendue Concern for Automotive Headlamp Using LEDs," SPIE Proceedings Vol. 5187, (January 2004) (Available at https://www.spiedigitallibrary.org/conference-proceedings-of-spie/5187/0000/Etendue-concerns-for-automotive-headlamps-using-white-LEDs/10.1117/12.504363.short)
2011	Michael Bass, *Handbook of Optics* 3RD Edition Volume II, (McGraw-Hill, 2010) (Available at https://www.worldcat.org/title/555545456)
2012	Ben Wang and Jianzhong Jiao "Studies for Headlamp Optical Design Using LEDs," SAE Technical Paper Series 2004-01-0434, (March 2004) (Available at https://www.sae.org/publications/technical-papers/content/2004-01-0434/)
2013	Ben Wang and Jianzhong Jiao "Optical Transform Limitations in Headlamp Photometric Performance," SAE Technical Paper Series 2005-01-0861, (April 2005) (Available at https://www.sae.org/publications/technical-papers/content/2005-01-0861/)

Exhibit No.	Description
2014	Intentionally left blank.
2015	Jianzhong Jiao and Ben Wang "High-Efficiency Reflector Optics for LED Forward Lighting," SPIE Proceedings Vol. 6670, (September 2007) (Available at https://www.spiedigitallibrary.org/conference-proceedings-of-spie/6670/66700M/High-efficiency-reflector-optics-for-LED-automotive-forward-lighting/10.1117/12.730524.short)
2016	Navigant Consulting "Energy Saving Estimates of Light Emitting Diodes in Niche Lighting Applications" Building Technologies Program Office of Energy Efficiency and Renewable Energy U.S. Department of Energy (September 2008) (Available at Energy Savings Estimates of Light Emitting Diodes in Niche Lighting Applications (Technical Report) | OSTI.GOV.)
2017	PCT Publication No. WO 86/05147 to Flaaten
2018	Transcript of Deposition of Jianzhong Jiao, Ph.D. taken on August 23, 2023
2019	Alliance for Automotive Innovation website retrieved September 11, 2023 https://www.autosinnovate.org/about/our-members
2020	Michael Bass, *Handbook of Optics* 3RD Edition Volume V, (McGraw-Hill, 2010) (Available at https://www.worldcat.org/title/557121959.)
2021	Texas Instruments/Digikey "How DLP Technology Works," (Available at https://www.digikey.com/en/product-highlight/t/texas-instruments/dlp-technology.) (Accessed September 12, 2023.)
2022	Texas Instruments "Introduction to +/- 12 Degree Orthogonal Digital Micromirror Devices (DMDs) (Available at https://www.ti.com/lit/an/dlpa008b/dlpa008b.pdf?HQS=dis-dk-null-digikeymode-dsf-pf-null-wwe&DCM=yes&distId=10) (Accessed September 12, 2023.)
2023	Certified File Wrapper of Reexamination Application 90/014815 dated January 11, 2023

1. I, Matthew A. Turk, hereby declare as follows:

2. I am making this declaration at the request of Yechezkal Evan Spero in the matter of *Inter Partes* Review of U.S. Patent No. 9,955,551 ("the '551 Patent") to Yechezkal Evan Spero.

3. I previously prepared a declaration in this proceeding dated March 22, 2023, submitted as an exhibit (Ex. 2001) with a Patent Owner Preliminary Response of the '551 Patent to a Petition filed on December 9, 2022 by Petitioner Volkswagen Group of America. I understand that on June 21, 2023, the Board instituted the Petition.

4. For this second declaration, I have been asked to again provide opinions on the claims of the '551 Patent in light of the prior art, Petitioner's arguments in the Petition and the corresponding declaration and testimony of Dr. Jiao. If called upon to do so, I would testify competently thereto. I supplement my prior declaration (Ex. 2001) with this additional declaration to do so.

5. As I indicated in my prior declaration, although I am being compensated for the time spent reviewing materials and performing my analysis of the technical issues relevant to this matter, my compensation in no way depends on the outcome of this proceeding.

6. In preparation of this declaration, I have studied the exhibits as listed in the Exhibit List shown above.

7. In forming the opinions expressed below, I have considered:

a. The documents listed above as well as additional patents and documents referenced herein;

b. The relevant legal standards, including the standard for obviousness provided in *KSR International Co. v. Teleflex, Inc*., 550 U.S. 398 (2007), and any additional documents cited in the body of this declaration; and

c. My knowledge and experience based upon my work and study in this area as described below.

I. Qualifications and Professional Experience

8. I am a Professor and President of the Toyota Technological Institute at Chicago (TTIC) and an Emeritus Professor of the Department of Computer Science at the University of California, Santa Barbara. I have worked and studied in the field of computer vision since 1984, as well as related areas of image processing, pattern recognition, machine learning, and human-computer interaction. The field of computer vision is concerned with determining how computers can extract, analyze and understand information from images and video and has been applied to a wide variety of applications including automotive lighting and controls such as those used in automotive adaptive forward lighting systems.

9. I received my doctorate degree in Media Arts and Sciences from the Massachusetts Institute of Technology (MIT) in 1991. My doctoral work was in the area of computer vision, specifically concerning automatic face recognition. I received my Master of Science degree in Electrical and Computer Engineering from Carnegie Mellon University in 1984. My Master's work was in the area of robot fine motion planning. I received my Bachelor of Science degree in Electrical Engineering from Virginia Tech (VPI&SU) in Blacksburg, Virginia in 1982, where my senior honors thesis was on image processing.

10. In 1991, I published the paper "Eigenfaces for Recognition," which I co-authored with my Ph.D. advisor, Dr. Alex Pentland. The research reported in this paper helped lead to practical automated face recognition systems that are used in today's security and surveillance systems, as well as in consumer applications. My work on Eigenfaces has received several awards, including an IEEE Computer Society Outstanding Paper award at the IEEE Conference on Computer Vision and Pattern Recognition (CVPR) in 1991 and a "Most Influential Paper of the Decade" award from the International Association for Pattern Recognition (IAPR) Workshop on Machine Vision Applications (MVA 2000).

11. Along with my co-authors, I have received several other awards at professional conferences and workshops for my work in computer vision, image processing, and augmented reality, including several best paper awards and

winning the ACM Multimedia Open Source Competition in 2015.

12. My industry experience includes working for Martin Marietta Denver Aerospace from 1984 to 1987, where I worked primarily on computer vision for autonomous vehicle navigation as part of the Defense Advanced Research Projects Agency's Autonomous Land Vehicle program, the precursor to the later DARPA Grand Challenge events and subsequent advances in self-driving automobiles. In 1992, I was a visiting researcher at LIFIA/ENSIMAG in Grenoble, France and from 1993 to 1994, I worked for Teleos Research in Palo Alto, CA; in both of those positions, I worked on computer vision methods for recognizing human faces, gestures, and activity. From 1994 to 2000, I was a researcher for Microsoft Research, where I was a founding member of the Vision Technology Research Group and conducted research in vision-based human computer interaction and other related areas.

13. In 2000, I joined the faculty of the University of California, Santa Barbara, as an Associate Professor. In 2005, I was promoted to Full Professor and served as the Chair of the Media Arts and Technology Graduate Program from 2005 to 2010. In 2017, I was appointed as Chair of the Department of Computer Science. At UCSB, I taught graduate and undergraduate courses related to computer vision, computer imaging, human computer interaction, probabilistic models and methods, artificial intelligence, computer graphics, machine learning,

and other areas. My Computer Imaging, Mobile Imaging, Computer Vision, Computer Graphics, and Computational Illumination courses covered the fundamentals of light and optics, camera sensors, imaging geometry, infrared imaging, optical filtering, image processing, 3D imaging, scene understanding, and structured lighting.

14. I co-founded (in 2003) and co-directed the Four Eyes Lab at UCSB, where the research focus is on the "four I's" of Imaging, Interaction, and Innovative Interfaces. The Four Eyes Lab researches a variety of topics, including computer vision, pattern recognition, virtual and augmented reality, and face processing technologies such as face recognition and facial expression analysis. I worked on and supervised many research projects in these areas, including (1) visual recognition of automobiles and (2) multi-flash imaging, which used multiple image sources and special optics to infer 3D scene structure from images.

15. In 2014, I co-founded a startup company, Caugnate, to commercialize computer vision and augmented reality technology for remote collaboration. Caugnate was acquired by PTC Inc., in 2016, and now forms the core of the Vuforia Chalk augmented reality product.

16. In 2019, I became President of the Toyota Technological Institute at Chicago, an independent graduate research institute, where the research and education focus of the faculty and Ph.D. students is on computer science theory,

machine learning, artificial intelligence, and related areas such as computer vision, speech and language processing, robotics, and computational biology.

17. As a result of my work and research, I am a named inventor of U.S. Patent Number 5,164,992 entitled "Face Recognition System," U.S. Patent Number 6,674,877 entitled "System and Method for Visually Tracking Occluded Objects in Real-time," and U.S. Patent Number 9,495,761 entitled "Environment mapping with automatic motion model selection."

18. I was a founding member of the Advisory Board for the International Conference on Multimodal Interfaces (ICMI), which provides a venue for disseminating recent advances in multimodal interaction research, systems, and methods, which includes combining visual modalities with audio, haptic, or other modalities. I served as the Chair of the ICMI Advisory Board from 2006 to 2009. I was also a founding member of the Advisory Board for the IEEE International Conference on Automatic Face and Gesture Recognition and served as the General Chair for the conference in 2011. I have been a primary organizer of several top research conferences, including serving as General Chair for the 2014 IEEE Conference on Computer Vision and Pattern Recognition, the primary annual conference in the field of computer vision, with over 2000 attendees, Program Chair for the 2017 IEEE Winter Conference on Applications of Computer Vision, and General Chair of the 2019 International Conference on Multimodal Interfaces

(ICMI).

19. I am currently an Associate Editor of the *ACM Transactions on Intelligent and Interactive Systems* and the *International Journal of Computer Vision and Signal Processing*, and was formerly an Associate Editor of *Image and Vision Computin*g. I have also served as a guest editor of several other journals related to computer vision, machine learning, and facial recognition. I have published research on lighting and optics, including research focused on automobile-related imaging, including: "Car-Rec: A real-time car recognition system," IEEE Workshop on Applications of Computer Vision (WACV 2011), January 2011; "VITS – a vision system for autonomous land vehicle navigation," IEEE Trans. On Pattern Analysis and Machine Intelligence, Vol. 10, No. 3, pp. 342-361, May, 1988; "Video road-following for the Autonomous Land Vehicle," Proc. IEEE International Conference on Robotics and Automation, Raleigh, N. C., April, 1987; "Color road segmentation and video obstacle detection," Advances in Intelligent Robotic Systems: Mobile Robots, SPIE, Cambridge, MA, 1986.

20. In 2020, I was elected a Fellow of the Association for Computing Machinery (ACM), the main professional society in the field of computer science, for "contributions to face recognition, computer vision, and multimodal interaction." In 2013, I was elected as a Fellow of the IEEE (the Institute of Electrical and Electronics Engineers), an award conferred by the Board of

Directors of the IEEE upon a person with an extraordinary record of accomplishments in any of the IEEE fields of interest. In 2014, I was elected as a Fellow of the International Association for Pattern Recognition (IAPR). In 2022, I was named as a Fellow of the Asia-Pacific Artificial Intelligence Association. I am also the recipient of the 2011-2012 Fulbright-Nokia Distinguished Chair in Information and Communications Technologies. I have given many keynote presentations at top conferences and workshops in my fields.

21. I have provided my full background in the curriculum vitae that is attached as Exhibit 2002.

II. Relevant Legal Standards

22. I have been asked to provide opinions on the claims of the '551 Patent in light of the prior art.

23. It is my understanding that a claimed invention is unpatentable under 35 USC § 102 if a prior art reference teaches every element of the claim. Further, it is my understanding that a claimed invention is unpatentable under 35 U.S.C. § 103 if the differences between the invention and the prior art are such that the subject matter as a whole would have been obvious at the time the alleged invention was made to a person having ordinary skill in the art to which the subject matter pertains. I also understand that an obviousness analysis takes into account factual inquiries including the level of ordinary skill in the art, the scope and

content of the prior art, and the differences between the prior art and the claimed subject matter.

24. It is my understanding that the Supreme Court has recognized several rationales for combining references or modifying a reference to show obviousness of the claimed subject matter. Some of these rationales include the following: combining prior art elements according to known methods to yield predictable results; simple substitution of one known element for another to obtain predictable results; a predictable use of prior art elements according to their established functions; applying a known technique to a known device to yield predictable results; choosing from a finite number of identified, predictable solutions, with a reasonable expectation of success; and some teaching, suggestion, or motivation in the prior art that would have led one of ordinary skill to modify the prior art reference or to combine prior art reference teachings to arrive at the claimed invention.

III. State of the Art as of 2002

A. POSA Considerations for LED Forward Lighting

25. While LEDs were being proposed for use in vehicle forward lighting applications to replace conventional light sources such as halogen and high-intensity discharge (HID) light sources, experts in vehicle lighting were uncertain, even years later in 2004 and beyond, if or when the significant challenges

associated with use of LEDs in these applications could be overcome to meet government regulations and industry standards while satisfying vehicle design aesthetics and operational demands.

B. Regulations and Standards

26. As generally referenced in numerous vehicle forward lighting patents and publications, vehicle forward lighting is subject to various government and industry regulations. Regulations such as the Federal Motor Vehicle Safety Standards (FMVSS) in the U.S. specify requirements with respect to minimum/maximum intensity, color, and beam pattern and shape for specific types of vehicle lights, such as low beam headlamp beams (also referred to as the dipped beam or passing beam) and high beam headlamp beams (also referred to as main beam or driving beam), cornering lamp beams, fog lamp beams, and signaling lamp beams, for example. Considering the differing requirements, functions, and positions for different types of lamp beams, a POSA would not have considered combining features from lamps having different functions (such as using amber color of fog lamp beams for low beam headlamps, or having high beam and low beam fog lamps, or cornering lamp beams having the intensity of low beam headlamps, etc.) or expect such combinations to meet regulatory requirements for a different type of lamp beam.

> Any automotive headlamp beam pattern, either high-beam or low-beam, is a light luminous intensity (candela) angular distribution. The candela values are specified at different vertical and horizontal angles by using test points, lines, and zones. The specifications are governed by federal laws or industry recommendations. For a low-beam headlamp, for example, the beam pattern requirement is based on several factors: A) sufficient road illumination for driver visibility and safety; B) glare light control for the oncoming vehicle drivers; C) lamp aim-ability; and D) spread and foreground light for driver's comfort. Because of these requirements, the headlamp beam pattern must be a highly non-isotropic light distribution; and its light intensity varies in a range from a few hundreds to 20,000 or more candela.

(Ex. 2010[1] at 237.)

> Based on the recent development of white LEDs, it becomes feasible to design automotive headlamps using LED light sources. While these LEDs are reaching high lumen output, the uniqueness of headlamp applications has not yet been sufficiently addressed. This paper discusses the optical features of an automotive headlamp, its optical

[1] Jianzhong Jiao and Ben Wang, "Etendue Concern for Automotive Headlamp Using LEDs", SPIE Proceedings Vol. 5187, published by the international society for optics and photonics (January 2004). Ex. 2010 is a true and accurate copy of a technical paper that I understand was published by SPIE in January 2004.

> design principles, light intensity distribution and concentration requirements, and safety and customer pleasing needs.

(Ex. 2010 at 234.)

27. Regulations and standards define headlamp beam patterns so that light is provided to illuminate both near and far distances while avoiding glaring. The beam pattern includes invariable characteristics (such as a step, cutoff, and hotspot) that result from the optical system including the size, position, and intensity of the light source relative to reflectors and lenses to meet the photometric requirements at designated test points.

> In certain angular area where high illumination is needed, the luminous intensity is very high and light is highly concentrated or collimated. This high light intensity area is called hotspot. At the top edge of the hotspot, light intensity is rapidly reduced to form a luminous intensity gradient or cutoff line, which serves two purposes: to control the glare light and to aim the lamp visually. Contrast to hotspot, the light that spreads to left and right or foreground has much less intensity and a large diverge or spread angle instead.

(Ex. 2010 at 237.)

> Cutoff is designed into the luminaire through the optics (i.e., edge-ray designs) and/or the integration of baffles. While most applications do not require cutoff classification, except for those used on the exterior, such as automotive, roadway, and landscape lighting, most designers include such to make effective lighting systems by alleviating

> potential glare, trespass, and pollution concerns. Often strict cutoff guidelines are mandated by governmental standards, such as for automotive, traffic signal, and roadway lighting. The goals are to provide the required lighting level to its users, while also alleviating light pollution and light trespass.

(Ex. 2011[2] at 40.43.)

> A typical automotive headlamp is required to provide a specific output light distribution – beam pattern. For a low-beam headlamp, for example, the beam pattern requirement is based on several factors: (1) sufficient road illumination for driver visibility and safety; (2) glare light control for the oncoming vehicle drivers; (3) lamp aim-ability; and (4) spread and foreground light for driver's comfort. When the headlamp is constructed with multiple optical units or compartments with N LED light sources, each optical unit may have a different etendue value, or provide different luminous intensity and different spread angle.
>
> * * *
>
> However, because **both lamp aperture and number of LEDs that can be physically packaged into the lamp aperture are limited by vehicle level restriction**, the hotspot luminous intensity level, or

[2] Michael Bass, *Handbook of Optics* 3RD Edition Volume II, (McGraw Hill 2010.) Ex. 2011 is a true and accurate copy of excerpts of a book that I understand was published by McGraw Hill in 2010.

> performance is highly depending on the LED's luminance, rather than its total lumen output.

(Ex. 2012[3] at 6-7, emphasis added.)

> One major difficulty for forming a headlamp beam pattern is to obtain sufficient candela values in the hotspot while the lamp total aperture is limited. For high-beam design, it is more difficult to form the hotspot as its candela requirement can be as high as 40,000.

(Ex. 2010 at 237-238.)

> The light intensity distribution or beam pattern from a forward lighting device is regulated by federal, state and international laws for safety. The optical system design to provide such beam patterns has been largely associated with the characteristics of the tungsten halogen or HID sources. White LEDs, on the other hand, have different optical characteristics, which in turn have impacted the headlamp optical system design.

(Ex. 2010 at 234.)

28. Regulations and standards require white light for vehicle forward lighting applications. As such, light sources emitting other colors are not available

[3] Ben Wang and Jianzhong Jiao, "Studies for Headlamp Optical Design Using LEDs", SAE Technical Paper Series 2004-01-0434, published by Society of Automotive Engineers (March 2004). Ex. 2012 is a true and accurate copy of a technical paper that I understand was published by SAE in March 2004.

for use in increasing output light from vehicle headlamps.

> Unless both covered and unlit, a vehicle operated on the highways of this state must not be equipped with a lamp or a part designed to be a reflector unless expressly required or permitted by this chapter or that meets the standards prescribed in 49 C.F.R. § 571.108. Except as otherwise provided, a lamp or a part designed to be a reflector, if visible from the front, must display or reflect a white or amber light; if visible from either side, must display or reflect an amber or red light; and if visible from the rear, must display or reflect a red light.

Michigan Vehicle Code Act 300 of 1949 § 257.698(4)[4]

> Generating white light from HB-LEDs is typically accomplished by one of two methods as depicted in Fig. 4. The first method, shown in Figs. 4a and b, utilizes an AlInGaN-LED in conjunction with one or more phosphors. When a UV-LED is used, the UV light emission is absorbed and re-emitted by a mixture of red, green, and blue phosphors.
>
> * * *
>
> The second method for white light emission is preferred when color tuning is necessary, such as in outdoor displays. As indicated in Fig. 4c, by using red, green, and blue LEDs, one can create white light

[4] Available at

http://www.legislature.mi.gov/(S(3uenjar05mg4e4n3udxmh5on))/mileg.aspx?page=getObject&objectName=mcl-257-698

> when the appropriate ratio of each is selected. This RGB approach has the added benefit of allowing the user to create any color within the associated color gamut by balancing the ratio of the individual LEDs. This method also allows for active adjustment of the color temperature of white light emission which is not possible using the LED/phosphor approach.

(Ex. 2011 at 18.5.)

C. Design Tradeoffs

29. Design tradeoffs imposed significant constraints on the use of LEDs in vehicle forward lighting applications, particularly with respect to meeting the required intensity, color, beam pattern, optical efficiency, packaging size, and thermal/heat management requirements.

> As shown in Fig.1, if one wants to obtain smaller spread angle to form a beam pattern, especially the hotspot of the beam pattern, the size of optical unit needs to be enlarged, so that the reflection on the reflector can occur farther from the source to get smaller reflected light spread angle. However, the smaller focus length reflector leads to higher accuracy and tolerances, which is a big challenge for LED headlamp overall design.

(Ex. 2012 at 4.)

> Besides the aperture, another limitation to form an adequate headlamp beam pattern is the overall size of the optical system and depth. Because of vehicle styling and packaging needs, the depth of a headlamp is also often restricted. As a consequence, the amount of

> lumen being collected and projected into the beam pattern through the optical system may not be sufficient to meet all the desires.

(Ex. 2010 at 238.)

> Because of the limitations of lamp aperture, the optical system focal length, and the dimensions of the LED emitter, the total system efficiency is assumed $\eta = 0.42$, which includes reflection loss, transmitting loss, refracting loss and collecting loss (equivalent to the above tungsten halogen case).

(Ex. 2010 at 240.)

30. Years after the patent application filed by Spero, experts in vehicle forward lighting acknowledged that implementing LEDs in headlamps presented "great concerns and challenges for the optical engineers."

> With desires of high performance and compact packaging size for both high and low beams, the issues of using LED light sources regarding light collection, efficiency, beam pattern compression and optical accuracy, are <u>great concerns and challenges for the optical engineers</u>.

(Ex. 2012 at 3, emphasis added.)

> Besides the aperture, another limitation to form an adequate headlamp beam pattern is the overall size of the optical system and depth. Because of vehicle styling and packaging needs, the depth of a headlamp is also often restricted. As a consequence, <u>the amount of lumen being collected and projected into the beam pattern through the optical system may not be sufficient to meet all the desires</u>.

(Ex. 2010 at 238, emphasis added.)

31. In 2004 and beyond, multiple LEDs (more than 30) were required to generate lumen output similar to a typical tungsten filament halogen bulb as "currently available white LED's lumen output [was] around 30 lm (maximum), which [was] about 3% of the typical tungsten halogen bulb's light flux output (1000 lm for 9006 bulb)." (Ex. 2012 at 3.) Furthermore, "the luminance of LEDs must be comparable or higher than the existing tungsten halogen light sources." (Ex. 2012 at 3.) The significant number of LEDs required to approximate a conventional halogen or HID light source would have prevented using those LEDs for purposes other than the designated low beam and high beam to satisfy regulations. Similarly, the large number of required LEDs would have prevented adding LEDs to perform forward lighting functions due at least to heat management, cost, and packaging considerations described *infra.* Changing the position, size, number, or maximum output of a light source within a headlamp would require changing the optical system including reflectors and lenses to generate an output light beam meeting required standards or regulations.

> When using a real light source such as LED with extended light emitting area A_s, light from the extended light source are diverged (or spread) by the optical system. The degree of the collimation depends on both the light source dimensions and the optical system characteristics such as focal length and aperture. If a light source size

> A_s with spread angle Ω_s (2s is chosen, for a given lamp aperture A_{lamp}, smaller focal length leads to higher light collection efficiency, but less collimation (a dilemma we always have to face). In addition, in a reflector system, the degree of light collimation varies at different parts of the reflector aperture, while a lens system has consistent light collimation throughout the entire aperture.

(Ex. 2010 at 238.)

> When multiple LED sources are used for one headlamp, each LED may have one FFR [Free Form Reflector] unit. The headlamp then consists of several FFR units. Because of the headlamp aperture and package limitations, small FFR unit with short focal lengths, e.g., approximately 10 mm may be used. Longer focal length **multiple LEDs headlamp may take too big of package space** and may not meet lamp size requirement.

(Ex. 2012 at 4, emphasis added.)

32. Even in 2004, it was unclear whether white LEDs would have sufficient light output to generate a light beam meeting applicable regulations and standards similar in intensity to conventional halogen sources.

> Although total lumen flux produced by the LEDs may be comparable to the existing light sources, e.g., incandescent bulbs, the optical and mechanical characteristics of LEDs may limit the headlamp applications.

(Ex. 2012 at 3, Abstract.)

> However, the currently available white LED's lumen output is around 30 lm (maximum), which is about 3% of the typical tungsten halogen bulb's light flux output (1000 lm for 9006 bulb). **If** the LED's output increases to 100 lm in the near future, it will be 10% of the tungsten halogen bulb's output. This **could lead to an assumption** that 10 LEDs with 100 lm output of each can be used to design an adequate tungsten halogen equivalent low-beam headlamp **if** the lamp system has the same light collection efficiency.

(Ex. 2012 at 3, emphasis added.)

> Although the LED current application for headlamp design is limited, because of the flexibility of how to share aperture, it opens a great opportunity and challenge to optical engineers to develop the design concepts that are more efficient. Overall, our experiences have shown that with additional losses introduced by sharing aperture, more LEDs must be added to meet the headlamp beam pattern and total aperture needs. For instance, a headlamp package with approximately 15 LEDs each has 100 lm output (again, total of 1,500 lm input) may be able to meet both performance and aperture requirements discussed in the above. However the total system efficiency is lower than tungsten halogen system.

(Ex. 2010 at 242.)

> For designing an adequate (SAE) automotive headlamp low-beam, several design performance values are desired: A) total lumen within the required beam pattern is around 420 lm; B) hotspot candela value is around 25,000 cd; C) large spread angle, 1,000 cd reaches to 35°

> left and right. In order to achieve the low-beam performance (420 lm inside the beam pattern, and 25,000 cd in the hotspot), **it takes 50% larger effective aperture when using LEDs that have equivalent total lumen output as a tungsten halogen bulb**.

(Ex. 2012 at 7, emphasis added.)

> Similar to the low-beam, for designing an automotive high-beam headlamp that meets the SAE photometry requirements, the desired lamp photometric performance is: A) total lumen within the required beam pattern approximately 600 lm; B) hotspot candela value around 50,000 cd; C) large spread angle with 2,000 cd at 15° left and right.
>
> * * *
>
> In order to achieve the high-beam performance (600 lm inside the beam pattern, and 50,000 cd in the hotspot), it **takes 150% larger effective aperture when using LEDs that have equivalent total lumen output as a tungsten halogen bulb** in aperture 8,000 mm^2.

(Ex. 2012 at 8, emphasis added.)

D. Hardware

33. Because light output from a single LED was insufficient to satisfy vehicle forward lighting regulations, multiple LEDs were needed. However, this presented challenges with respect to collecting and directing the light from an extended source as compared to a point source to generate the required beam pattern with corresponding luminance at designated points.

> Because of the principle and the design restrictions for the system aperture and package size, the luminance of LEDs must be comparable or higher than the existing tungsten halogen light sources.

(Ex. 2012 at 3.)

> The limitations or difficulties of using multiple LED to design headlamp may be summaries as two major parts: (A) as the total lamp aperture is being divided into several sub-apertures, the portion of the sub-apertures $A_{(lamp,i)}$ used for LEDs to project lights into hotspot zone with smaller spread angle $\Omega_{(lamp,i)}$ is small. **As a result, there may not be enough light for hotspot**; (B) the smaller sub-structure of the lamp has much smaller focal length comparing to tungsten halogen source, it then requires higher accuracy.

(Ex. 2012 at 10.)

> One major difficulty for forming a headlamp beam pattern is to obtain sufficient candela values in the hotspot while the lamp total aperture is limited.

(Ex. 2010 at 237.)

E. Optical System

34. Headlamp optical system design requires a number of design considerations that may change depending on the type of light source being a conventional filament, a linear array of LEDs, a planar array of LEDs, etc. Selection and design of conventional geometric optics or free form reflectors (FFR), passive/active baffles, shields, deflectors, light sinks, modulators, imaging

or non-imaging optics, position/focal points of extended array source including depth/distance between light source and reflectors and output lens(es), etc., all impact the resulting output light beam.

> Although there are several typical optical systems to form a headlamp beam pattern such as reflector system, lens system, projector system, and others, the size of the effective aperture is essential for ensure the desired photometry performance.

(Ex. 2010 at 240.)

> In order to maintain the system collection efficiency, one can shorten the focal length of the optical unit used for the LED source. However, smaller focal length system leads to larger light source images as well as higher system accuracy required. Both will be adding difficulties to the headlamp design and manufacturing.

(Ex. 2012 at 3.)

> In both tungsten halogen and HID cases, the light emitting area is contained in small dimensions, and the light intensity distributions are in general, Lambertian. The light intensity distribution or beam pattern from a forward lighting device is regulated by federal, state and international laws for safety. The optical system design to provide such beam patterns has been largely associated with the characteristics of the tungsten halogen or HID sources. White LEDs, on the other hand, have different optical characteristics, which in turn have impacted the headlamp optical system design. In addition, the lumen output per LED is still much less than that the exiting tungsten

> halogen or HID sources provide, multiple LED sources must be used for one head lamp.

(Ex. 2010 at 234.)

> [F]ive basic optical transforms used in the automotive lamp optical design have been discussed.
>
> * * *
>
> The limitations for these transforms are based on the etendue conservation. These limitations are the intrinsic properties of the optical systems used in the illumination applications including automotive lamps.
>
> * * *
>
> [T]he overall balance between the total lumen and luminance of the LEDs and the headlamp optical structure is controlled by these limitations.
>
> * * *
>
> [T]o achieve high performance for a headlamp, when the system losses caused by manufacturing . . . are not avoidable, sufficient lumen and luminance of the light sources and sufficient optical systems are always necessary and important.

(Ex. 2013[5] at 10.)

---

[5] Ben Wang and Jianzhong Jiao "Optical Transform Limitations in Headlamp Photometric Performance", SAE Technical Paper Series 2005-01-0861, published

> In the design of the above prototype LED headlamp, because the plastic dome of the LED magnifies the chip image, each LED emitter then has effective size of 1.5 mm X 1.5 mm. As shown in the Fig. 11A & 11B, **the hotpots [*sic*] intensity of both low-beam and high-beam pattern are not high enough to provide sufficient down-the-road light**.

(Ex. 2012 at 10, emphasis added.)

> When designing the low-beam headlamp using tungsten halogen bulb with FFR, the filament is in an axial orientation along the optical axis of the FFR. With such arrangement, it is quite natural to form the desired hotspot horizontal angular spread. Regardless what aspect ratio or shape of the LED chip could be, it is important to realize that one of the chip demission must be small, or comparable to the size of the tungsten halogen filament diameter unless the LED emitter has extremely high luminance.

(Ex. 2012 at 11.)

F. Spatial Light Modulator

35. A POSA would have understood a spatial light modulator (SLM), such as described by Beam (Ex. 1005) or Karlsson (Ex. 1010), to be an array of

---

by Society of Automotive Engineers (April 2005). Ex 2013 is a true and accurate copy of a technical paper that I understand was published by SAE in April 2005.

individually electrically controllable elements each operable as an optical switch. A transmissive SLM may be constructed using optical elements such as liquid crystals (LCs) that selectively transmit light in a first state (ON, for example) and selectively block light in a second state (OFF, for example). (Ex. 2020[6], 8.29-8.30, pp. 342-343.) Alternatively, a reflective SLM, such as a digital light processor (DLP) used in projectors, may be constructed using optical elements such as micromirrors that reflect light at predetermined first/second angles depending on whether the switch is ON/OFF. (Ex. 2021[7].) Light reflected at the first angle exits the device, while light reflected at the second angle is blocked by the device. (Ex. 2022[8].)

---

[6] Michael Bass, *Handbook of Optics* 3RD Edition Volume V, (McGraw-Hill, 2010.) Ex. 2020 is a true and accurate copy of excerpts of a book that I understand was published by McGraw Hill in 2010.

[7] Texas Instruments/Digikey "How DLP Technology Works." Ex. 2021 is a true and accurate copy of a Digikey webpage (https://www.digikey.com/en/product-highlight/t/texas-instruments/dlp-technology) that was accessed on September 12, 2023.

[8] Texas Instruments "Introduction to +/- 12 Degree Orthogonal Digital Micromirror Devices (DMDs). Ex. 2022 is a true and accurate copy of a Texas

- An SLM is used by Beam and Karlsson to convert a light beam generated by a light source, such as an incandescent halogen bulb, for example, to multiple separate and individually controllable smaller light beams (microbeams as described by Beam, or spotlight beams as described by Karlsson) so that the smaller light beams can be individually blanked or blocked and do not exit the headlamp. (*See e.g.*, Ex. 1005 at 4:36-41; Ex. 1010, 5:4-15.)
- In addition to embodiments that use a single light source with an SLM to generate the multiple controllable microbeams or spotlight beams, Beam and Karlsson also describe alternative embodiments that replace the single light source and SLM with multiple individually controllable light sources, such as LEDs, that may be individually switched ON/OFF to generate the multiple controllable microbeams or spotlight beams without an SLM. (*See e.g.*, Ex. 1005, Figs. 4, 6; Ex. 1010, Fig. 14.)
- As described by Beam and Karlsson, and as would be recognized by a POSA, in view of the redundant functionality there is no reason to use an

---

Instruments Document that was revised in February 2018 and is available online at (https://www.ti.com/lit/an/dlpa008b/dlpa008b.pdf?HQS=dis-dk-null-digikeymode-dsf-pf-null-wwe&DCM=yes&distId=10) (Accessed September 12, 2023.)

SLM in combination with individually controllable light sources such as LEDs for adaptive headlamp applications. On the contrary, for a POSA there are numerous reasons associated with cost and complexity that counsel against such a combination. For example:

- additional assembly and corresponding control complexity would be introduced in aligning positions of the LEDs within an array with corresponding SLM elements and determining which LEDs and SLM switches to control in combination;
- due to losses inherent to each optical element (SLM, lens, reflector, etc.) positioned in the path of a light beam, and the relatively low luminous flux generating ability of available LEDs at the time, light output from the LEDs would be further reduced by an SLM even while being operated in a transmitting state;
- use of an SLM to blank/block light being generated by one or more LEDs would result in increased power consumption and heat generation as compared to simply turning the corresponding LEDs off; and
- packaging considerations of placing a redundant device having multiple electrical connections with proper positioning relative to other optical elements of the headlamp, such as reflectors, lenses, etc.

- For at least the reasons described herein, a POSA would not use an SLM in combination with a light source, such as an LED array, that already has the ability to individually control portions of the generated light beam to provide adaptive headlamp functionality because the functionality of the two components is redundant, and thus unnecessary.

G. Heat management

36. The light output from an LED source varies with temperature and decreases as temperature increases. Similarly, the spectral characteristics or color of the light emitted by the LED varies with temperature. As such, heat management was an important consideration with respect to meeting regulations during operation of an LED headlamp. Furthermore, heat management imposed an additional design constraint such that POSAs were attempting to minimize the number of LEDs and/or maximize the efficiency of light output from the headlamp and would not be motivated to add LEDs to an array to provide additional functionality.

> LED, in principle, is a temperature-dependent light source. In all cases, the higher the temperature, the lower the luminous flux output from LED is. As such, managing the heat generated in the LED, or heat from external environment of LED lamp, has been challenging because LED light output reduced when the temperature goes up.

(Ex. 2007, 50:2-9.)

> When multiple chips are arranged linearly, such as 2 or 4 1mm x 1mm chips lined up inside of the LED package, if the current density of the package is assumed the same for the above chip arrangement, higher temperature or high heat is generated for the LED packages with larger chip numbers. In practice, the heat dissipation may not be linearly related to the power of the LED packages, thus, due to the junction temperature dependence, the luminous flux of the LEDs is not linearly related to the chip numbers.

(Ex. 2015[9] at 7.)

> In recent years the push for solid-state white lighting has resulted in a transition to larger HB-LED chip sizes and an increase in the operating current densities. The latter brings new constraints to packaging due to the increased need for thermal management in an effort to keep the junction temperature of the HB-LED as low as possible. While the traditional packaging formats have proven very effective for standard drive current use, they are not suitable for high drive current applications using large area HB-LEDs since they do not provide adequate thermal management.

---

[9] Jianzhong Jiao and Ben Wang "High-Efficiency Reflector Optics for LED Forward Lighting", SPIE Proceedings Vol. 6670, published by the International Society for Optics and Photonics (September 2007). Ex. 2015 is a true and accurate copy of a technical paper that I understand was published by SPIE in September 2007.

* * *

> Most HB-LEDs use sapphire substrates that provide very poor heat dissipation from the LED junction due to the low thermal conductivity of sapphire.

* * *

> Standard clear epoxies that are used in conventional packages typically cannot withstand temperatures much above 100°C. In flip chip high drive packages this can be easily exceeded and would cause thermal damage to conventional epoxies.

(Ex. 2011, at 18.6.)

H. Packaging

37. Packaging considerations for automotive headlamps presented challenges even years after the earliest priority date of ’551 Patent. These included the depth required based on longer focal lengths associated with LEDs, multiple LEDs required to achieve required light output at reduced collection efficiency due to extended array, sufficient heat sinks, driver electronics, and other components required for operation while meeting vehicle design aesthetic requirements.

> One major difficulty for forming a headlamp beam pattern is to obtain sufficient candela values in the hotspot while the lamp total aperture is limited.

(Ex. 2010 at 237.)

> With desires of high performance and compact packaging sizes for both high and low beam headlamps, using LED light sources is a great challenge for the headlamp design optical engineers for light collecting efficiency, beam pattern compression and optical accuracy.

(Ex. 2012 at 3.)

> Besides the aperture, another limitation to form an adequate headlamp beam pattern is the overall size of the optical system and depth. Because of vehicle styling and packaging needs, the depth of a headlamp is also often restricted. As a consequence, the amount of lumen being collected and projected into the beam pattern through the optical system may not be sufficient to meet all the desires.

(Ex. 2010 at 238.)

I. Cost

38. The higher cost associated with LEDs to provide similar illumination relative to conventional light sources such as halogen or HID sources was another factor that contributed to the uncertainty of whether LEDs were, even if feasible, a suitable replacement for conventional light sources in vehicle forward lighting applications.

> [T]he added cost of solid-state white lighting has slowed the market acceptance. A common cost comparison is the first cost of a light source, typically measured in terms of the cost per kilolumen (klm). Incandescent and fluorescent light sources fall in the $0.5 to $3.00 per

> klm, while current light emitting diode sources fall easily in the $20 to $30 per klm range.

(Ex. 2011 at 18.5.)

> [T]he LED light source can be more than 20 times as expensive as the incandescent light source it replaces.

(Ex. 2016[10] at 66.)

IV. Overview of the '551 Patent

39. The '551 Patent discloses "a novel multi-light source approach to the design and construction of solid-state lighting fixtures (vs. solid state lamps), which is termed a 'Digital Lighting Fixture', due to the control of individual lighting element 'digits' to provide the 'correct' lighting solution for the situation at hand." (Ex. 1001, 11:8-13.) The '551 Patent further explains that "[t]he terminology 'digital' as used herein refers to the discrete nature of the multiple LED lamps provided in the luminaire, whereby, 'digital' control results from the individual control of the discrete, i.e., 'digital' lighting elements, the LEDs, in the

[10] Ex. 2016 Navigant Consulting "Energy Saving Estimates of Light Emitting Diodes in Niche Lighting Applications" Building Technologies Program Office of Energy Efficiency and Renewable Energy U.S. Department of Energy (September 2008). Ex. 2016 is a true and accurate copy of a technical paper that I understand was published by the DOE in September 2008.

luminaire." (Id. at 2:65-3:3.)

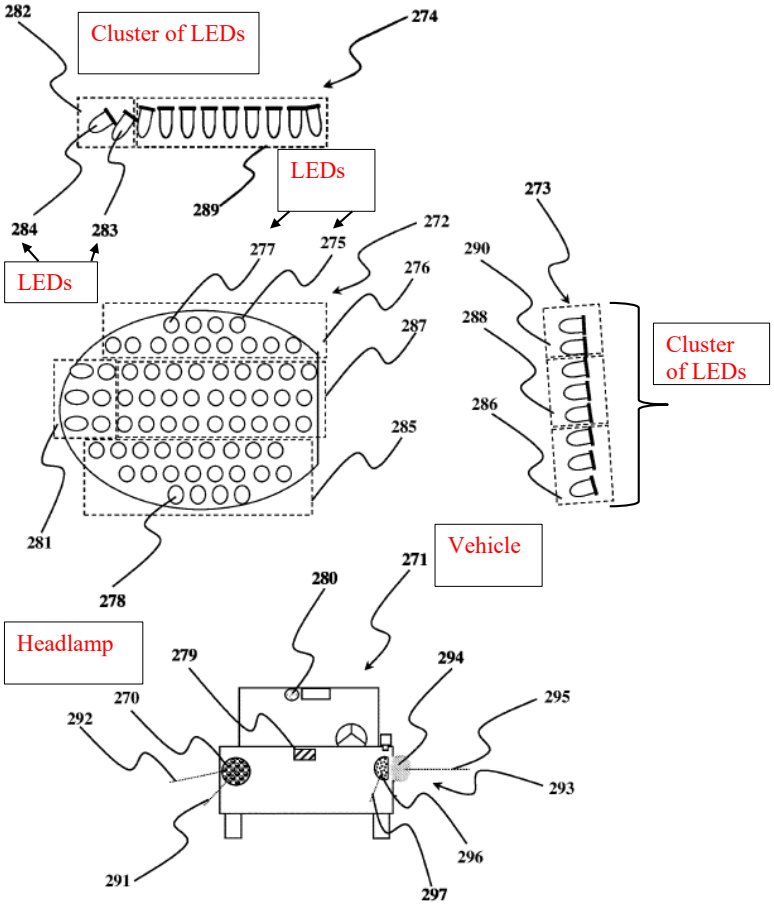

(Ex. 1001, Fig. 15, Annotated)

40. The '551 Patent describes "a different approach which is to provide the end user with the most correct lighting solution not a new technology lamp to replace the old one." (*Id.*, 11:5-8.) "In contrast to a prior art, single large, lamp replacement like light source, the present invention provides multiple, small sized sources of differing characteristics such that the effect of the whole is greater than the sum of the individual parts." (*Id.*, 11:45-49.) "The added controllability offered by breaking the total light output up into **discrete ('digital') specifically aimable**

and dimmable elements which can be addressed by control electronics to effect intensity, spectrum and spatial distribution of intensity and spectrum, yields a lighting fixture (vs. lamp) of unparalleled performance." (*Id*., 11:56-62, emphasis added.) The '551 Patent describes using a digital light fixture (DLF) to provide multiple functions, for example "[i]n a DLF it is possible to combine a task light having a very narrow 'spot' beam at the correct aiming with a general area lighting 'flood' beam into one fixture." (*Id*., 22:14-16.) Similarly, the '551 Patent explains how to use its "digital lighting" in the context of headlamps to "provide the optimal lighting solution in real-time" (*Id*., 57:31-37) – whether that be for predictive curve illumination (*Id.*, 51:52-56), to preserve forward illumination while preventing glare (*Id*., 52:54-65), or both (*Id.*, 53:34-45).

41. The Challenged Claims include claims 24-56 and are reproduced below. (Ex. 1002 at 993-996, 1011-1016.)

No.	Element
24.p	24. An illuminating device having automatic control of light provided to an illuminated area comprising:
24.1	a structure for incorporating illuminating device elements, wherein the structure comprises a motor vehicle;
24.2	a plurality of individually controllable LEDs incorporated in the

No.	Element
	structure via at least one headlamp mounted to the structure, each headlamp including at least one of the LEDs, the LEDs in communication with a power source;
24.3	electronic circuitry apparatus for the controlled powering of the LEDs and other of the illuminating device elements;
24.4	one or more processors;
24.5	one or more sensors, including one or more cameras, placed on the structure for detecting coordinate-specific information about the illuminated area, at least one of said cameras in communication with power, and in communication with at least one of the one or more processors;
24.6	a controller, including at least one of the one or more processors, integrated with the structure via mounting, in communication with the LED controlling power electronic circuitry apparatus, said controller arranged to process the information communicated from the cameras and to automatically control the light provided to the illuminated area; and
24.7	memory storing instructions that, when executed by one or more

No.	Element
	processors of the controller, enable the controller to:
24.8	determine first coordinates corresponding to an other vehicle, based on the coordinate-specific information;
24.9	select a cluster of the LEDs that emit light toward at least a portion of the other vehicle based on the LEDs having emission aimings associated with the first coordinates; and
24.10	change emission of the selected cluster of LEDs relative to emission of other LEDs not included in the cluster to create headlamp illumination that preserves a first level of illumination illuminating past the other vehicle while preventing glare to a driver of the other vehicle.
25.	25. The illuminating device of claim 24, wherein: the changed emission includes a change to at least one of intensity or color or a change of at least one LED of the cluster to a non-emitting state; and the cluster includes a plurality of the LEDs and the cluster includes non-contiguous LEDs.
26.	26. The illuminating device of claim 24, wherein the memory further stores instructions that, when executed by one or more processors of

No.	Element
	the controller, enable the controller to: identify an upcoming road curvature along a road on which the motor vehicle is traveling; and accommodate the upcoming road curvature by adaptation of a light pattern of at least one of the at least one headlamps.
27.	27. The illuminating device of claim 26, wherein: the changed emission includes a change to at least one of intensity or color or a change of at least one LED of the cluster to a non-emitting state; the cluster includes a plurality of the LEDs and the cluster includes non-contiguous LEDs; and the memory further stores instructions that, when executed by one or more processors of the controller, enable the controller to accommodate the road curvature by changing illumination in at least a direction of the road curvature by adaptation of the light pattern in at least one of color, intensity or spatial distribution by modification of light associated with one or more of the LEDs.
28.	28. The illuminating device of claim 26, wherein the identification of

No.	Element
	the upcoming road curvature is based at least in part on map data and wherein the adaptation of the light pattern is based at least in part on the map data.
29.	29. The illuminating device of claim 26, wherein the identification of the upcoming road curvature is based at least in part on sensor data provided by one or more of the sensors of the vehicle and wherein the adaptation of the light pattern is based at least in part on the sensor data.
30.	30. The illuminating device of claim 24, further including one or more optical control elements to control light emitted from one or more of the LEDs.
31.	31. The illuminating device of claim 30, wherein the optical control elements include at least one of one or more reflectors, refractors or lenses.
32.p	32. An illuminating device having automatic control of light provided to an illuminated area comprising:
32.1	a structure for incorporating illuminating device elements, wherein the structure comprises a motor vehicle;

No.	Element
32.2	a plurality of individually controllable LEDs incorporated in the structure via at least one headlamp mounted to the structure, each headlamp including at least one of the LEDs, the LEDs in communication with a power source;
32.3	electronic circuitry apparatus for the controlled powering of the LEDs and other of the illuminating device elements;
32.4	one or more processors;
32.5	one or more sensors, including one or more cameras, placed on the structure for detecting coordinate-specific information about the illuminated area and positioned to capture an image of at least one target, at least one of said cameras in communication with power, and in communication with at least one of the one or more processors;
32.6	a controller, including at least one of the one or more processors, integrated with the structure via mounting, in communication with the LED controlling power electronic circuitry apparatus, said controller arranged to process the information communicated from the cameras and to automatically control the light provided to the illuminated area; and

No.	Element
32.7	memory storing instructions that, when executed by one or more processors of the controller, enable the controller to:
32.8a	create a beam of diminished illumination illuminating at least a portion of the at least one target with non-glaring illumination, created within a broader field of illumination having different intensity than the beam, by one or more changes to characteristics of first light of a cluster of the LEDs providing the first light directed at the at least a portion and creating the beam,
32.8b	the beam diminished in intensity relative to the broader field of illumination illuminating at least above and on both sides of the beam; and
32.9	follow, based at least in part on data from one or more of the cameras, the at least one target with the diminished illumination as the at least one target changes location relative to the motor vehicle.
33.	33. The illuminating device of claim 32 wherein: the memory further stores instructions that, when executed by one or more processors of the controller, enable the controller to select the cluster of LEDs based at least in part on known aimings of the first

No.	Element
	light associated with the first cluster having a correlation to the at least the portion, the known aimings based at least in part on at least one of known directionality of light emitted by the first cluster or known directionality of light emitted by the first cluster exiting the headlamp; the data includes image data; the one or more changes to characteristics of the first light include a change to at least one of intensity or color or a change of at least one LED of the cluster to a non-emitting state; and the cluster includes a plurality of the LEDs and the cluster includes non-contiguous LEDs.
34.	34. The illuminating device of claim 32, wherein the memory further stores instructions that, when executed by one or more processors of the controller, enable the controller to: identify an upcoming road curvature along a road on which the motor vehicle is traveling; and accommodate the upcoming road curvature by adaptation of a light pattern of at least one of the at least one headlamps.
35.	35. The illuminating device of claim 34, wherein:

No.	Element
	the one or more changes to characteristics of the first light include a change to at least one of intensity or color or a change of at least one LED of the cluster to a non-emitting state; the cluster includes a plurality of the LEDs and the cluster includes non-contiguous LEDs; the memory further stores instructions that, when executed by one or more processors of the controller, enable the controller to select the cluster of LEDs based at least in part on known aimings of the first light associated with the first cluster having a correlation to the at least the portion, the known aimings based at least in part on at least one of known directionality of light emitted by the first cluster or known directionality of light emitted by the first cluster exiting the headlamp; and the memory further stores instructions that, when executed by one or more processors of the controller, enable the controller to accommodate the road curvature by changing illumination in at least a direction of the road curvature by adaptation of the light pattern in at least one of color, intensity or spatial distribution by modification of light associated with one or more of the LEDs.

No.	Element
36.	36. The illuminating device of claim 34, wherein the identification of the upcoming road curvature is based at least in part on map data and wherein the adaptation of the light pattern is based at least in part on the map data.
37.	37. The illuminating device of claim 34, wherein the identification of the upcoming road curvature is based at least in part on sensor data provided by one or more of the sensors of the vehicle and wherein the adaptation of the light pattern is based at least in part on the sensor data.
38.	38. The illuminating device of claim 32, further including one or more optical control elements to control light emitted from one or more of the LEDs.
39.	39. The illuminating device of claim 38, wherein the optical control elements include at least one of one or more reflectors, refractors or lenses.
40.p	40. (New) An illuminating device having automatic control of light provided to an illuminated area comprising:
40.1	a structure for incorporating illuminating device elements, wherein the

No.	Element
	structure comprises a motor vehicle;
40.2	a plurality of individually controllable LEDs incorporated in the structure via at least one headlamp mounted to the structure, each headlamp including at least one of the LEDs, the LEDs in communication with a power source;
40.3	electronic circuitry apparatus for the controlled powering of the LEDs and other of the illuminating device elements;
40.4	one or more processors;
40.5	one or more sensors, including one or more cameras, placed on the structure for detecting coordinate-specific information about the illuminated area and positioned to capture an image of at least two other vehicles, at least one of said cameras in communication with power, and in communication with at least one of the one or more processors;
40.6	a controller, including at least one of the one or more processors, integrated with the structure via mounting, in communication with the LED controlling power electronic circuitry apparatus, said controller arranged to process the information communicated from the cameras

No.	Element
	and to automatically control the light provided to the illuminated area; and
40.7	memory storing instructions that, when executed by one or more processors of the controller, enable the controller to: determine a first cluster of the LEDs illuminating at least a first portion of a first other vehicle based at least in part on data from one or more of the sensors indicating a first position associated with the first other vehicle; diminish glaring illumination of the first other vehicle by a first change to one or more characteristics of first light of at least the first cluster; determine a second, different cluster of the LEDs illuminating at least a second portion of a second other vehicle based at least in part on the data indicating a second position associated with the second other vehicle; diminish glaring illumination of the second other vehicle by a second change to one or more characteristics of second light of at least the second, different cluster, wherein the first and second changes decrease intensity of first

No.	Element
	emission from the first cluster and second emission from the second cluster relative to a third emission, from the at least one headlamp, illuminating an area between the first and second portion.
40.8a	determine a first cluster of the LEDs illuminating at least a first portion of a first other vehicle based at least in part on data from one or more of the sensors indicating a first position associated with the first other vehicle;
40.8b	diminish glaring illumination of the first other vehicle by a first change to one or more characteristics of first light of at least the first cluster;
40.8c	determine a second, different cluster of the LEDs illuminating at least a second portion of a second other vehicle based at least in part on the data indicating a second position associated with the second other vehicle;
40.8d	diminish glaring illumination of the second other vehicle by a second change to one or more characteristics of second light of at least the second, different cluster,
40.8e	wherein the first and second changes decrease intensity of first

No.	Element
	emission from the first cluster and second emission from the second cluster relative to a third emission, from the at least one headlamp, illuminating an area between the first and second portion.
41.	41. The illuminating device of claim 40, wherein: the data includes image data; at least one of the first or second change to characteristics of light associated with at least one of the first or second cluster of LEDs includes at least one of a change to color, to intensity, or a change of at least one LED of the respective cluster to a non-emitting state; at least one of the first cluster or the second cluster includes a plurality of the LEDs and at least one of the first cluster or the second cluster includes non-contiguous LEDs; the determination of the first cluster includes selection of the first cluster based at least in part on known aimings of light associated with the first cluster having a correlation to the first position, the known aimings based at least in part on at least one of known directionality of light emitted by the first cluster or known directionality of light emitted by the first cluster exiting the headlamp; and

No.	Element
	the determination of the second cluster includes selection of the second cluster based at least in part on known aimings of light associated with the second cluster having a correlation to the second position, the known aimings based at least in part on at least one of known directionality of light emitted by the second cluster or known directionality of light emitted by the second cluster exiting the headlamp.
42.	42. The illuminating device of claim 40, wherein the memory further stores instructions that, when executed by one or more processors of the controller, enable the controller to: identify an upcoming road curvature along a road on which the motor vehicle is traveling; and accommodate the upcoming road curvature by adaptation of a light pattern of at least one of the at least one headlamps.
43.	43. The illuminating device of claim 42, wherein: at least one of the first or second change to characteristics of light associated with at least one of the first or second cluster of LEDs includes at least one of a change to color, to intensity, or a change of at

No.	Element
	least one LED of the respective cluster to a non-emitting state; at least one of the first cluster or the second cluster includes a plurality of the LEDs and at least one of the first cluster or the second cluster includes non-contiguous LEDs; the determination of the first cluster includes selection of the first cluster based at least in part on known aimings of light associated with the first cluster having a correlation to the first position, the known aimings based at least in part on at least one of known directionality of light emitted by the first cluster or known directionality of light emitted by the first cluster exiting the headlamp; the determination of the second cluster includes selection of the second cluster based at least in part on known aimings of light associated with the second cluster having a correlation to the second position, the known aimings based at least in part on at least one of known directionality of light emitted by the second cluster or known directionality of light emitted by the second cluster exiting the headlamp; and the memory further stores instructions that, when executed by one or more processors of the controller, enable the controller to accommodate

No.	Element
	the road curvature by changing illumination in at least a direction of the road curvature by adaptation of the light pattern in at least one of color, intensity or spatial distribution by modification of light associated with one or more of the LEDs.
44.	44. The illuminating device of claim 42, wherein the identification of the upcoming road curvature is based at least in part on map data and wherein the adaptation of the light pattern is based at least in part on the map data.
45.	45. The illuminating device of claim 42, wherein the identification of the upcoming road curvature is based at least in part on sensor data provided by one or more of the sensors of the vehicle and wherein the adaptation of the light pattern is based at least in part on the sensor data.
46.	46. The illuminating device of claim 40, further including one or more optical control elements to control light emitted from one or more of the LEDs.
47.	47. The illuminating device of claim 46, wherein the optical control elements include at least one of one or more reflectors, refractors or

No.	Element
	lenses.
48.p	48. An illuminating device having automatic control of light provided to an illuminated area comprising: and
48.1	a structure for incorporating illuminating device elements, wherein the structure comprises a motor vehicle;
48.2	a plurality of individually controllable LEDs incorporated in the structure via at least one headlamp mounted to the structure, each headlamp including at least one of the LEDs, the LEDs in communication with a power source;
48.3	electronic circuitry apparatus for the controlled powering of the LEDs and other of the illuminating device elements;
48.5	one or more processors;
48.6	one or more sensors, including one or more cameras, placed on the structure for detecting coordinate-specific information about the illuminated area, at least one of said cameras in communication with power, and in communication with at least one of the one or more

No.	Element
	processors;
48.7	a controller, including at least one of the one or more processors, integrated with the structure via mounting, in communication with the LED controlling power electronic circuitry apparatus, said controller arranged to process the information communicated from the cameras and to automatically control the light provided to the illuminated area; and
48.8	memory storing instructions that, when executed by one or more processors of the controller, enable the controller to:
48.9a	illuminate a portion of at least one object, indicated by data from at least one of the one or more sensors, by selecting a first cluster of the LEDs to emit first light directed towards a first area including the at least the portion of at least one object, the first area determined based at least in part on the data, the first cluster selected based at least in part on known aimings of light associated with the first cluster determined to correspond to the first area, and the first light determined based at least in part on classifying the object based at least in part on the data; and

No.	Element
48.9b	control light emitted from the first cluster directed towards the first area to be different in at least one emission characteristic, based on the first light determination, from second light emitted from a second, different cluster of the LEDs, directed towards one or more illuminated second areas at a common elevation with the first area and laterally adjacent to the first area.
49.	49. The illuminating device of claim 48, wherein: the data includes image data; the memory further stores instructions that, when executed by one or more processors of the controller, enable the controller to illuminate the at least the portion with light below at least a predefined glare level; the at least one object includes at least one of a pedestrian, a sign, or another vehicle; at least one of the first cluster or the second cluster includes a plurality of the LEDs and at least one of the first cluster or the second cluster includes non-contiguous LEDs; the control of the light emitted from the first cluster includes a change of at least one LED of the cluster to a non-emitting state;

No.	Element
	the at least one emission characteristic is different following modification by an optical control element; and the known aimings of light associated with the first cluster is based at least in part on known directionality of light emitted by LEDs of the first cluster exiting from the at least one headlamp.
50.	50. The illuminating device of claim 48, wherein the memory further stores instructions that, when executed by one or more processors of the controller, enable the controller to: identify an upcoming road curvature along a road on which the motor vehicle is traveling; and accommodate the upcoming road curvature by adaptation of a light pattern of at least one of the headlamps.
51.	51. The illuminating device of claim 50, wherein: the memory further stores instructions that, when executed by one or more processors of the controller, enable the controller to illuminate the at least the portion with light below at least a predefined glare level; the at least one object includes at least one of a pedestrian, a sign, or another vehicle;

No.	Element
	at least one of the first cluster or the second cluster includes a plurality of the LEDs and at least one of the first cluster or the second cluster includes non-contiguous LEDs; the control of the light emitted from the first cluster includes a change of at least one LED of the cluster to a non-emitting state; the at least one emission characteristic is different following modification by an optical control element; the known aimings of light associated with the first cluster is based at least in part on known directionality of light emitted by LEDs of the first cluster exiting from the at least one headlamp; and the memory further stores instructions that, when executed by one or more processors of the controller, enable the controller to accommodate the road curvature by changing illumination in at least a direction of the road curvature by adaptation of the light pattern in at least one of color, intensity or spatial distribution by modification of light associated with one or more of the LEDs.
52.	52. The illuminating device of claim 50, wherein the identification of the upcoming road curvature is based at least in part on map data and

No.	Element
	wherein the adaptation of the light pattern is based at least in part on the map data.
53.	53. The illuminating device of claim 50, wherein the identification of the upcoming road curvature is based at least in part on sensor data provided by one or more of the sensors of the vehicle and wherein the adaptation of the light pattern is based at least in part on the sensor data.
54.	54. The illuminating device of claim 48, further including one or more optical control elements to control light emitted from one or more of the LEDs.
55.	55. The illuminating device of claim 54, wherein the optical control elements include at least one of one or more reflectors, refractors or lenses.

42. The ’551 Patent describes a multitude of sensor-based techniques for observing a scene, analyzing a scene, determining varied illumination for a scene, etc. This can include determining what objects are within the scene and what illumination should correlate to those objects. (Ex. 1001, 44:36-45:44.) The ’551 Patent notes the general applicability of the varied concepts across embodiments

and specifically notes that techniques described elsewhere at least correspond to headlamps. (*Id*., 52:66-53:4.) The ’551 Patent explains that, by using “digital” headlamps with known light directionality of discrete source elements, such as LEDs, it is possible to “continue to illuminate far ahead (in high beam) without blinding oncoming traffic.” (*Id*., 52:60-61.) This allows for determination of “what exact aiming is the maximum allowable for any given traffic situation and the road layout.” (*Id.*, 52:64-65.)

43. The ’551 Patent also recognizes that different “objects” may be in the field of view in a variety of lighting situations, and that different light output may be appropriate to accommodate these different objects. (*Id.*, 44:36-45:44.) In the context of headlamps, it can, for example, determine types of objects, e.g., without limitation, whether something is a vehicle or a sign, and respond differently to each object, such as reducing illumination of the vehicle and increasing illumination of the sign. These accommodations can be made at the same time because of the discrete nature of the directional light sources – “use the controller and properly aimed SLS to follow and illuminate distant overhead and roadside signs for a longer time, yet not blind oncoming traffic due to the narrow beam.” (*Id.*, 53:1-4.) This is a headlamp embodiment employing, among other things, the described notion of “task lighting” – contemplation of varied illumination needs within an illuminated scene.

44. The dependent claims add additional unique limitations, e.g., Predictive Curve Limitations: a controller enabled to "*accommodate the upcoming road curvature by adaptation of a light pattern*" (claims 26-29, 34-37, 42-45, 50-53); and Non-Contiguous Limitations: "*select[ing] a cluster of the LEDs that emit light toward at least a portion of* <u>*the other vehicle*</u>*"* where *"the cluster includes a plurality of the LEDs and the cluster includes* <u>*non-contiguous LEDs*</u>." (Claims 25/33/41/49).

45. Thus, the '551 Patent provides a comprehensive solution for the control and use of light and extends the application to headlamps that can accommodate other traffic without glaring, predictively illuminate road curvatures, and differentially illuminate objects in a scene based on object recognition. All of this lends itself to the complete headlamp solution contemplated and described in the '551 Patent– a solution where "[a]t any instant in time the intensity, spectrum and beam pattern of the headlamp may be varied as a function of the drivers [sic] intent, lay of the road and environmental factors." (Ex. 1001, 51:49-52.) The marrying of the '551 techniques with the headlamp embodiments results in a headlamp with highly controllable emission elements that, "[w]hen combined with devices capable of detection changes in the surrounding environment the flexible DLF is capable of changing the illumination so as to provide the optimal lighting solution in real-time." (*Id*., 57:33-37.)

V. Qualifications of one of ordinary skill in the art

46. I have been asked to provide my opinion as to the level of skill of a person having ordinary skill in the art ("POSA") of the '551 Patent at the time of the claimed invention. In determining the characteristics of a hypothetical person of ordinary skill in the art of the '551 Patent at the time of the claimed invention, I was told to consider several factors, including the type of problems encountered in the art, the solutions to those problems, the rapidity with which innovations are made in the field, the sophistication of the technology, and the education level of active workers in the field. I also placed myself back in the time frame of the claimed invention and considered the skill level of colleagues with whom I had worked at that time.

47. I understand that Petitioner has proposed the following level of ordinary skill:

> [A] POSA at the time of the alleged invention would have had a bachelor's degree (B.S.) in mechanical engineering, electrical engineering, optical engineering, applied physics, or an equivalent field, as well as at least 2 years of industry experience in the area of automotive lighting and lighting-control systems.

(Petition at 7.)

48. I understand that Patent Owner accepts Petitioner's proposed level of ordinary skill in the art. At the time of filing of the priority application of the '551

Patent, a skilled artisan developing a lighting system utilizing LEDs and corresponding controls would have encountered new challenges with respect to both optics and LED controls. Accordingly, it is my opinion that a POSA would have had experience with both, i.e., engineering and optics.

VI. Proposed Claim Constructions

49. In order to properly evaluate these claims, I understand that the terms of the claims must first be construed. In my opinion, the claims of the ’551 Patent do not include any terms that require specific construction. Instead, each of the claims includes terms that an ordinary artisan would understand according to their plain and ordinary meaning.

VII. Overview of the Prior Art

A. Beam: U.S. Patent No. 6,144,158

50. Beam discloses an Adaptive Anti-Blinding Headlight (“AABH”). (Ex. 1005.) Beam recognized that existing headlight systems operated “either as a ‘high beam’ or as a ‘low beam’” often under manual control, and various unsatisfactory attempts to solve this problem included:

> systems which attempt to control the intensity profile of the beam by using a reflector or lens shaped to control the output beam in some predetermined way; systems to move the headlamps in response to changes that occur to the automobile on which they are mounted; . . .

> movement of headlight beams in response to changes in the vehicle's steering mechanism, etc.

(Ex. 1005, 1:21-23, 1:63-2:5.)

51. Beam solves the identified problems by providing a non-moveable AABH system having a multiplicity of microbeams that "will operate <u>at maximum intensity at all times</u>" allowing "the driver to have the equivalent of high beam headlights or brighter on at all times, greatly enhancing the ability to see at night." (Ex. 1005, 6:11-12, 6:54-55, emphasis added.) Beam further discloses that:

> From the viewpoint of the driver of an automobile equipped with AABH, it will be like having bright high beams on at all times but without concern that the other motorists within the extent of his headlight beam will be dazzled.
>
> * * *
>
> Accordingly, several objects and advantages of this invention are to provide greatly improved safety and comfort to the motoring public, in particular, and to others who may be affected by them by providing the driver of an automobile equipped with the instant invention with a far brighter headlight beam while simultaneously protecting the drivers of all vehicles ahead from being dazzled by the light.

(Ex. 1005, 6:40-44, 3:8-15.)

52. A POSA would have understood that Beam teaches providing a high beam operating at maximum intensity at all times in the illuminated region, other

than any areas around detected light sources from other vehicles.

53. Beam provides significantly **reduced** illumination only in those portions of the headlight beam that would otherwise dazzle or annoy other drivers. This is accomplished by "darken[ing] those microbeams that would otherwise illuminate areas near to the source of the impinging beam, thus eliminating the blinding of a driver in an oncoming vehicle, while continuing to provide intense forward illumination." (Ex. 1005, 1:15-19, Claims 4, 5, emphasis added.) While Beam discloses blanking or darkening microbeams that would otherwise dazzle other drivers, it does not disclose or teach changing direction of any microbeams exiting the lamp.

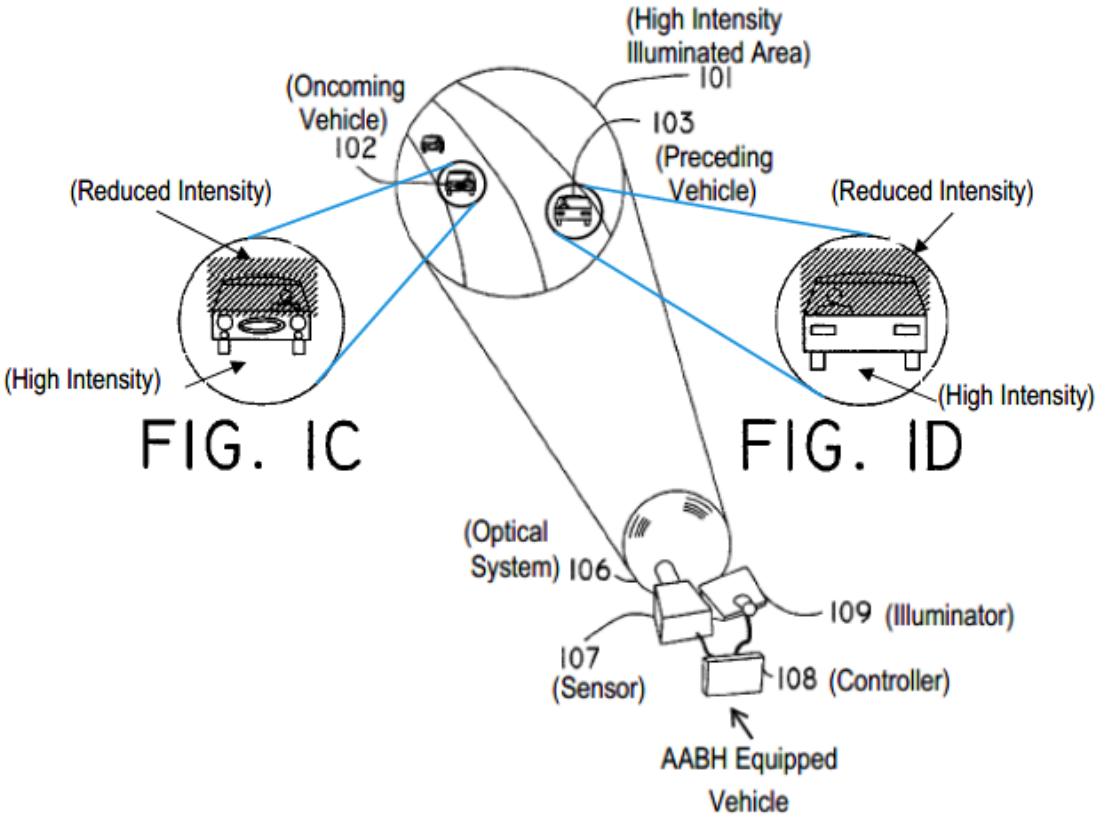

(Ex. 1005, FIG. 1C, 1D, Annotated)

54. In the AABH system, illuminator 109 projects individually controlled narrow-angle microbeams to provide high-intensity illumination of illuminated area 101. Headlights of an oncoming vehicle 102 and/or taillights of a preceding vehicle 103 are transmitted through optical system 106 and detected by a sensor (camera) 107. Data from sensor 107 is used by controller 108 to map the "angular position of the vehicles ahead" to a corresponding position/size of microbeams that must be significantly reduced in intensity corresponding to the shaded areas shown for oncoming vehicle 102 in Fig. 1C, and preceding vehicle 103 in Fig. 1D. (Ex. 1005, 4:9-24, 53-59, 62-64.)

55. Beam describes two distinct embodiments using alternative components that significantly reduce illumination intensity of individual microbeams in response to detecting incoming headlights/taillights or other light sources. However, neither embodiment discloses increasing intensity beyond the maximum intensity for any microbeams, or changing direction of any of the microbeams exiting the lamp.

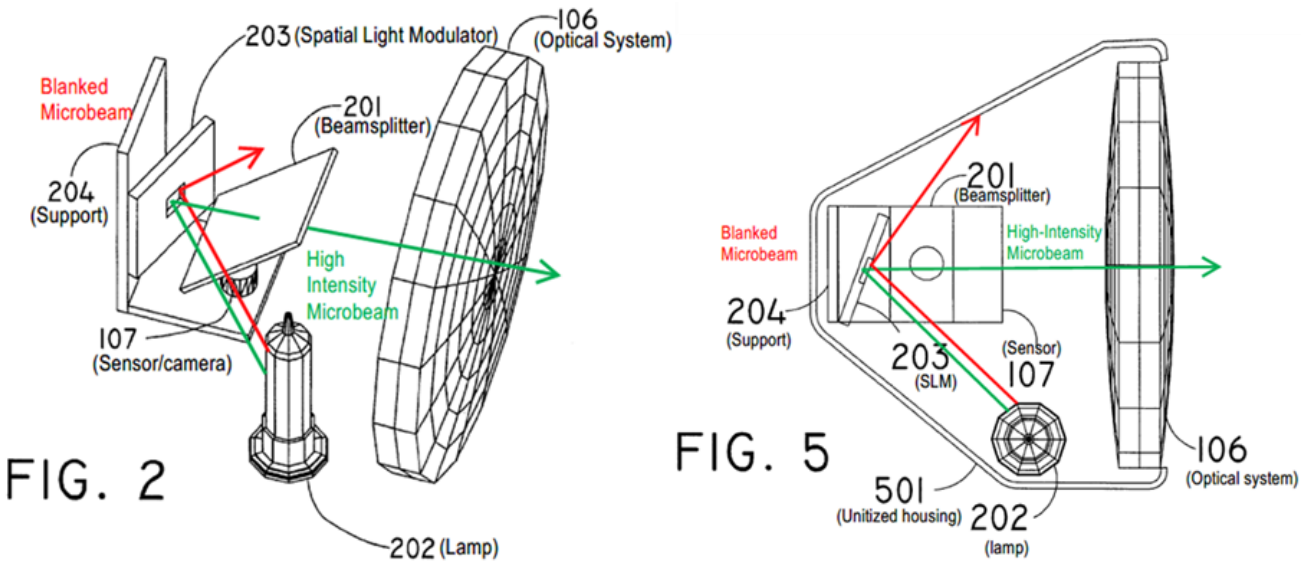

(Ex. 1005, FIGs. 2, 5, Annotated)

56. In the first embodiment illustrated in Fig. 2 (perspective view) and Fig. 5 (top view), light from lamp 202 falls on spatial light modulator (SLM) 203, which is controlled so that the associated individual microbeams are either 1) reflected by SLM 203 at full intensity through beam splitter 201 and out through headlamp optical system 106, or 2) "blanked (attenuated by being either absorbed or deflected [by SLM 203] to an absorbing surface" so that they <u>do not exit the</u>

headlamp optical system 106. (Ex. 1005, 4:36-40, 5:65-66, emphasis added.) While SLM 203 blanks one or more microbeams by deflecting the blanked microbeams to an internal absorbing surface of the headlamp 501, it does not change direction or angular position of the headlamp beam exiting optical system 106 because the blanked microbeams are "diverted or attenuated at the source" and never exit the headlamp optical system 106. (*Id.* at 5:66.) The Beam SLM 203 appears to work in a similar fashion as a digital light processing (DLP) chip that was in existence on or before the time of filing of the Beam Patent and is used in DLP projectors.

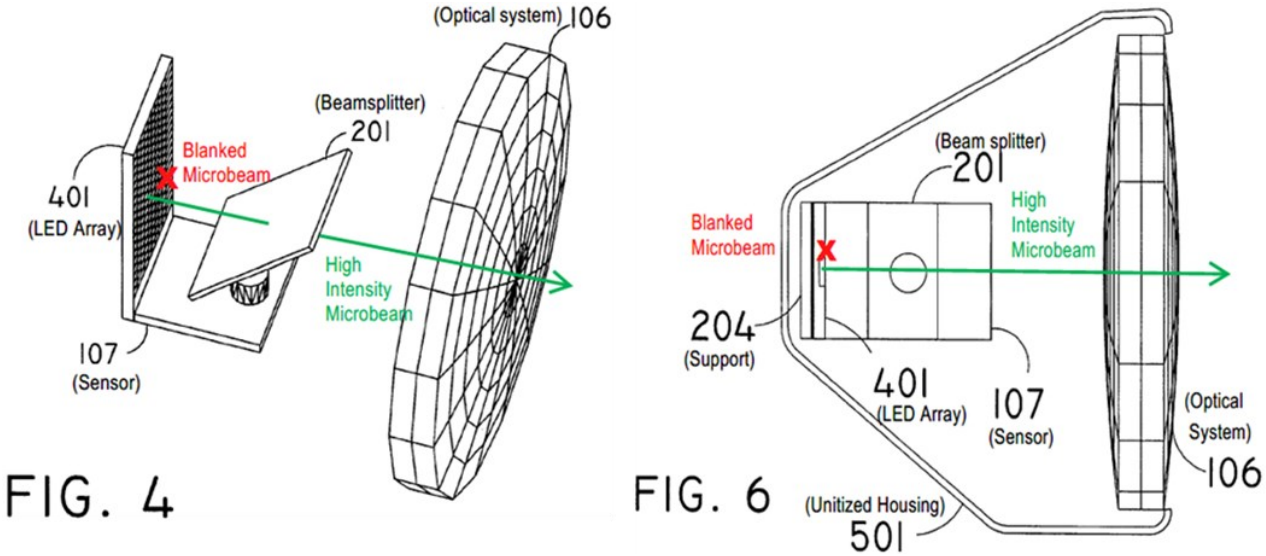

(Ex. 1005, FIGs. 4, 6, Annotated)

57. The second embodiment is illustrated and described with respect to Fig. 4 (perspective view) and Fig. 6 (top view). The second embodiment replaces both SLM 203 and lamp 202 used to generate and modulate (reduce) intensity of

the microbeams of the first embodiment, with an array of light sources 401, such as an LED array, that generates the narrow-angle microbeams. Microbeam blanking is accomplished by dimming one or more of the LEDs making the modulator of the first embodiment superfluous, and it is thus omitted from the second embodiment.

58. In operation, light from oncoming/preceding vehicles or other sources enters through optical system 106 and is reflected by beamsplitter 201 to sensor 107. The sensor signals corresponding to the angular position (azimuth/elevation) or spatial location of the detected light are mapped by controller 108 to associated microbeams to determine the size (number) and location of the LEDs within LED array 401 to be blanked or dimmed to prevent blinding/dazzling other drivers. The output of the active LEDs creates the high-intensity microbeams projected out through optical system 106. (Ex. 1005, 3:62-64, 4:53-5:16.)

59. Beam's AABH system eliminates moving components to overcome the problems identified with the prior art. The AABH system generates a high-intensity beam formed by non-moveable microbeams with individual microbeams blanked, attenuated, or otherwise dimmed in response to detected incoming light to darken portions of the high-intensity illumination and prevent blinding of other drivers.

60. Petitioner relies on a combination of their own creation, in which the spatial light modulator, 203 in the embodiment of Figures 2 and 5, is inserted into

the LED array embodiment of Figures 4 and 6. In doing so, Petitioner conflates the functionality of the embodiments and ignores Beam's express teaching that the lamp AND modulator are replaced by the LED array in the second embodiment. A POSA would never interpret the SLM as being included in the LED embodiment because the functionality of the two components is redundant, and thus unnecessary.

B. Satonaka

61. Satonaka discloses a camera 22 that is mounted "[a]t the top of this windshield glass 14 and inside of vehicle 10 (at the driver's visual field position, or in other words, near the driver's eyepoint)." (Ex. 1014, [0017].)

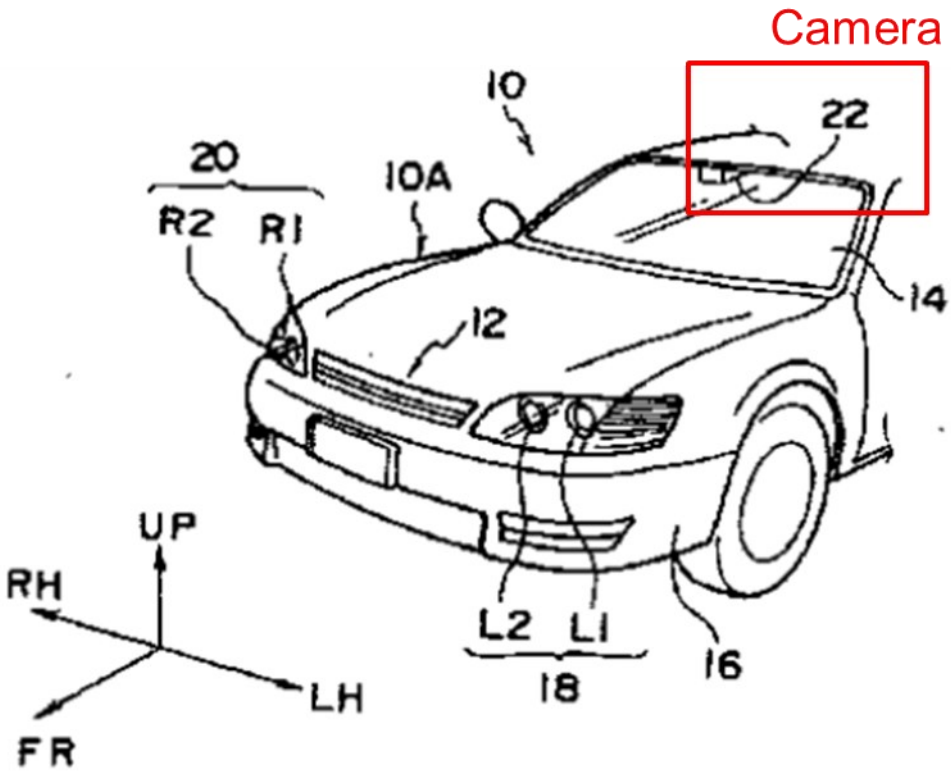

(Ex. 1014, Fig. 1, Annotated)

62. With reference to Figure 4, Satonaka discloses a strategy for processing the image captured at the driver's eyeline. (Ex. 1014, [0026].)

(FIGURE 4)

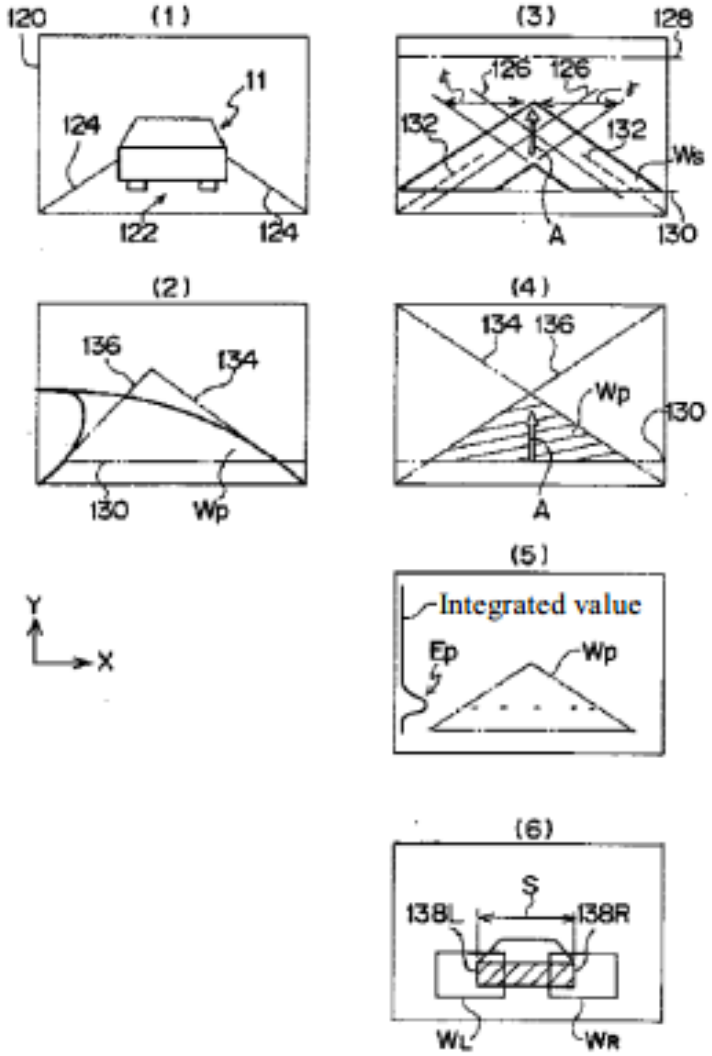

(Ex. 1014, Fig. 4)

63. Satonaka discloses an image 120 "that was obtained by camera 22, [in which a] preceding vehicle 11 is positioned within white lines 124 on both sides of the lane of road 122 on which vehicle 10 is traveling." (Ex. 1014, [0026].) As will be appreciated from Fig. 4(1), this image appears comparable to a driver's

perspective, a result of Satonaka's intentional camera placement "near the driver's eyepoint."

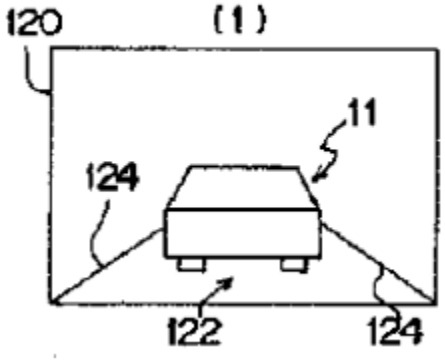

(Ex. 1014, Fig. 4(1))

64. Next, Satonaka's system "perform[s] white line candidate point extraction and colinear approximation processing" to winnow the image down to an area-of-consideration called the "vehicle recognition region W_P," which coincides with the lane of travel (Ex. 1014, [0027]).

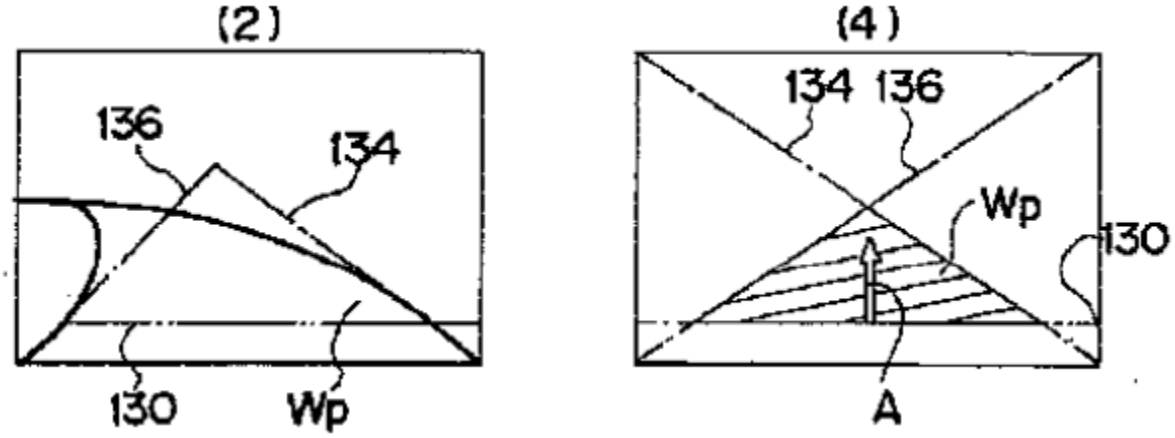

(Ex. 1014, Figs. 4(2), 4(4))

65. That is, from the camera perspective at the eyeline of the driver,

where the preceding vehicle is visible between the also-visible lane lines, Satonaka derives a vehicle recognition region bounded by the lane lines on either side, extended to intersection at an apex (Ex. 1014, Fig. 4(3).)

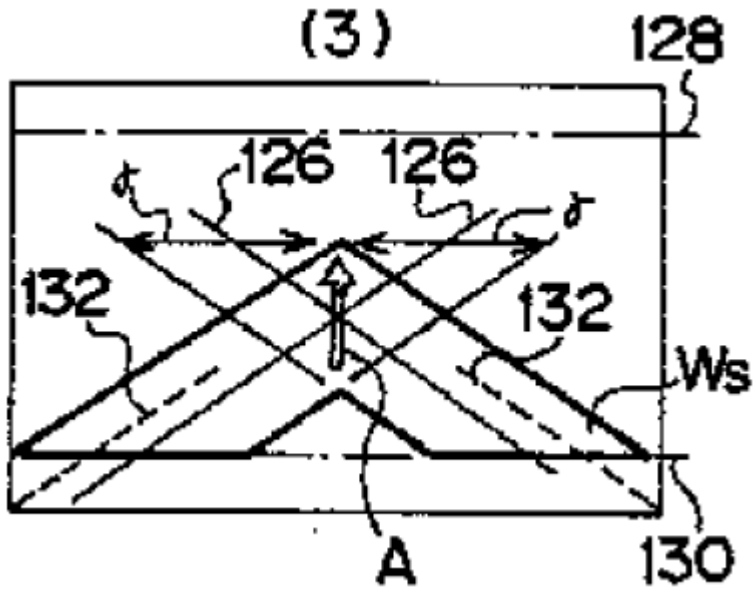

(Ex. 1014, Fig. 4(3))

66. Satonaka then performs "detection processing" on illumination within WP, which can include, at least, detection of light in some instances. (Ex. 1014, [0030], [0069].) Then Satonaka treats the light in the bounded region as though it came from a vehicle – "If a continuous point … is stably detected within the window regions, it will be adjudged that preceding vehicle 11 is present." (Ex. 1014, [0031].) Satonaka teaches both predicates, detected light and that the light be within the recognition region, in order to adjudge the presence of the vehicle.

67. Satonaka discusses further refinement of a second, oncoming vehicle

recognition region W_{P0}, in order to refine the region to "region W_{OO} that includes the region between the upper limit line and lower limit line [in Fig. 5] as determined in advance and in which there is high probability of the presence of oncoming vehicle 11A." (Ex. 1014, [0035].)

C. Kobayashi: U.S. Patent No. 6,049,749

68. Kobayashi discloses a "Lighting Device for a Vehicle." (Ex. 1008.) Kobayashi is directed to a headlight control system that changes direction or range of a headlight beam using map information unless a predicted vehicle travel direction as indicated by a turn indicator, steering angle, and vehicle speed/acceleration differs from the map data, i.e., "[w]hen the vehicle advancing direction at which the driver aims does not coincide with the profile of the road." (Ex. 1008, 3:10-27.) More specifically, Kobayashi discloses a headlamp system with moveable components to control irradiation (illumination) direction and range in accordance with a road profile when the vehicle travels along a scheduled course, or in accordance with a steering angle and vehicle speed when the predicted advancing direction of the vehicle deviates from the scheduled course (Ex. 1008, 6:4-10; 17:59-67.) A "mechanical" and "moveable" system as used in this context refers to a system with moving parts and/or mechanisms to position the light beam.

69. Kobayashi changes irradiation direction using a motor to either rotate

the entire lighting device about its axis, or to change relative position among internal lighting device components, such as a reflecting mirror, lens, light source, or shielding member. (Ex. 1008, 6:11-39.) Irradiation range is controlled by either combining different lighting devices with each other (such as a fog lamp, head lamp, and cornering lamp), or by controlling a motor to change position of the internal components (such as reflecting mirrors lenses, or shades) relative to one another. (Ex. 1008, 6:40-7:14.) Irradiation range may be changed responsive to a branch (intersection) ahead on a road by moving the internal lighting device components to change a horizontal irradiating angle α. (Ex. 1008, 8:1-32.)

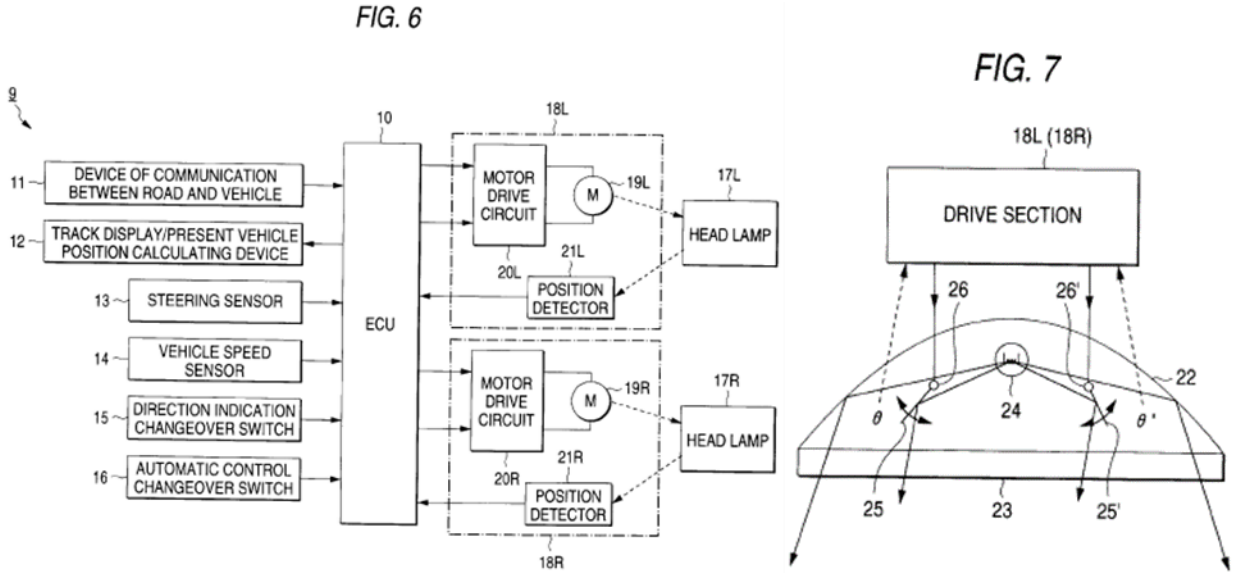

(Ex. 1008, FIGs. 6, 7)

70. Kobayashi's ECU 10 receives signals from: communication device 11 (conducting communication between a road and vehicle), track display/present vehicle position calculating device 12, steering sensor 13, vehicle speed sensor 14,

direction indicating switch 15 and automatic control change-over switch 16. ECU 10 generates signals for drive sections 18L, 18R of head lamps 17L, 17R arranged on the left and right front portion of a vehicle. (Ex. 1008, 10:1-17.) Drive sections 18L, 18R include associated motor drive circuits 20L, 20R to drive associated motors 19L, 19R with position detectors 21L, 21R to detect the posture of the head lamps 17L, 17R or their composing members (internal components). (Ex. 1008, 10:66-11:4.)

71. Figure 7 illustrates a headlamp with moveable composing members to control the direction and range of irradiation. Light source 24 and movable reflecting mirrors 25, 25’ are positioned between stationary reflecting mirror 22 and front lens 23. Movable reflecting mirrors 25, 25' are rotated about respective rotating axes 26, 26' by a link mechanism to a rotation angle (θ, θ') to provide partial direction control of irradiating light. (Ex. 1008, 11:5-14.)

72. Figures 4 and 10 illustrate operation of the moveable composing members of the headlamps to control irradiation range and direction while approaching an intersection and running on a curved road, respectively. (Ex. 1008, 2:48-49, 65-67.)

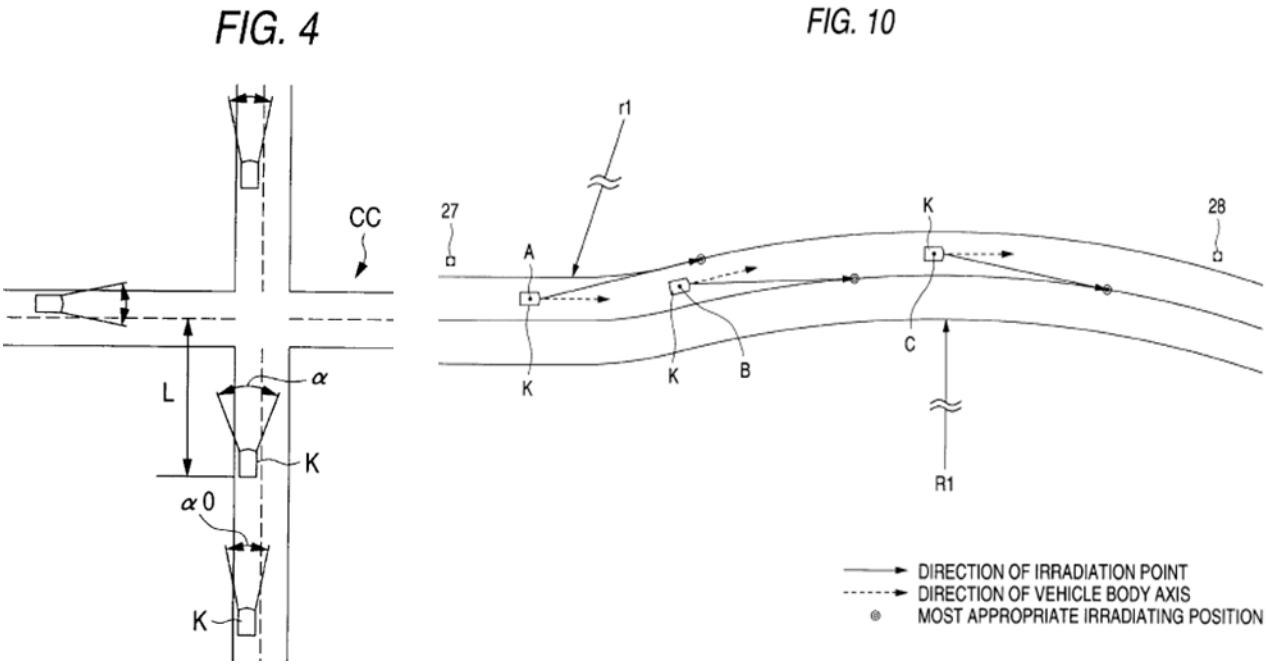

(Ex. 1008, FIGs. 4, 10)

73. As shown in Figure 4, Kobayashi's headlamp motors are operated to increase horizontal irradiating angle α0 to α>α0 based on a distance L from intersection CC and vehicle speed. (Ex. 1008, 8:14-25.) In Figure 10, the headlamp motors are operated according to road profile information and vehicle speed to change the irradiating direction toward a determined irradiating position for the driver's line of sight at each position of the vehicle. When the vehicle turns to the left at point A, the left shoulder is irradiated. When the vehicle turns to right, the right shoulder is irradiated, etc. If the driver operates the steering wheel by an angle larger than necessary for the curve, irradiation control is conducted in accordance with the vehicle advancing direction predicted by the steering angle. (Ex. 1008, 14:53-15:39.)

74. Kobayashi clearly does not disclose: 1) LEDs or any other "digital" lighting sources; 2) a light sensor or detecting light for any purpose; or 3) any control of headlight irradiation direction or range related to anti-blinding or preventing glare for preceding or oncoming vehicle drivers.

D. Gotou: U.S. Patent No. 5,588,733

75. Gotou discloses a "Head Lamp Device for Vehicle." (Ex. 1012.) Gotou discloses headlamps that are rotated by a motor to change leftward/rightward illumination direction using map information indicative of forward road shape, or in accordance with vehicle signals such as a direction indicating signal, a steering angle signal, and a vehicle speed signal "in the case that a vehicle runs on a place having no road information in a navigation system or the vehicle turns out of the planned course." (Ex. 1012, Abstract, Fig. 1, Fig. 5, Fig. 6, 1:42-2:18, 3:31-41.)

76. Gotou discloses a "swinging mechanism," shown in Figure 2, wherein "a lamp unit 4 of the head light 2 is fixed to a rotary shaft 5, and a worm gear 7 formed at a driving shaft of a motor 8 is engaged with a worm wheel 6 fitted to the rotary shaft 5." (*Id*. at 3:36-41.)

FIG. 2

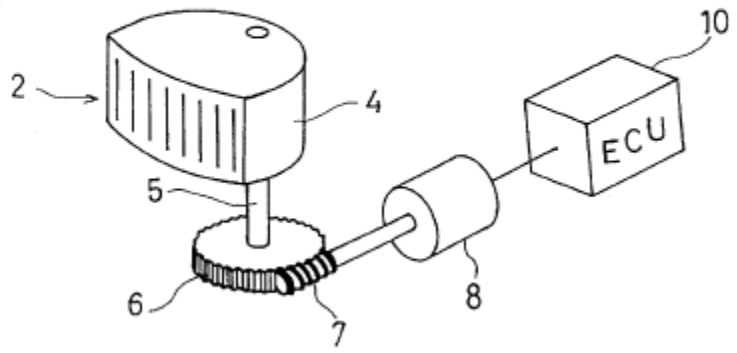

(Ex. 1012, FIG. 2)

77. As shown below in Figure 1 of Gotou, each headlight 2 provides light along a single optical axis L. "The right and left headlights 2 and 2 are swung together in the same direction by the same angle and shown in FIG. 1, angles of their optical axes L and L, with respect to the advancing direction of the vehicle, i.e. optical axis angles are both set to be θ." (Ex. 1012, 3:31-35.) Optical axes L and L are imaginary straight lines that pass through the center of the corresponding headlight projection, resulting in light output that is symmetric with respect to the optical axis at the chosen angle. Notably, while Gotou relies on adjustments to the optical axes to change the lighting region "in front of the vehicle in rightward and leftward directions," it does not contemplate turning lamp unit 4 on/off or otherwise changing its intensity. (Ex. 1012, 1:60-64.)

FIG.1

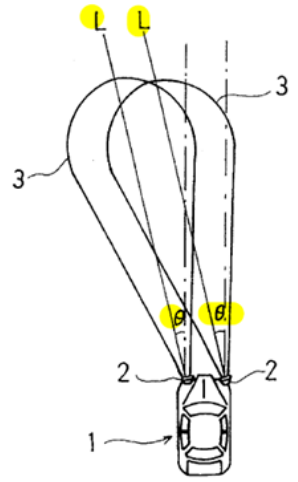

(Ex. 1012, FIG. 1, Annotated)

78. The driving of motor 8 is controlled by a light distributing control ECU 10, depicted in FIG. 3. Under the mechanical control system of Gotou, the ECU processes a series of inputs from the map information and vehicle signals such as a "direction indicating signal," "a steering angle signal" and a "vehicle speed signal" and "processes the information and signals to determine a requisite optical axis angle θ and an indicating signal is outputted to a motor driver 14 so as to achieve the optical axis angle θ, and thereby the right and left motors 8 and 8 are controlled in driving with the motor driver 14." (Ex. 1012, 3:51-66.) When the "winker lever is operated, the optical axis angle is changed at once to a predetermined angle for lighting the turning direction of the vehicle early, and the determined optical axis angle is larger as the vehicle speed is faster." (Ex. 1012, 4:58-64.)

79. Gotou further describes the state of the art at the time of the invention, pointing out the deficiencies in prior art systems predicated on steering wheel position:

> [T]here are many proposals in the prior art in which the lamp optical axes are controlled for their movements in the horizontal rightward or leftward direction in response to a steering angle of the steering wheel. . . <u>However, the lighting region in such prior art as above is not changed unless the steering wheel is operated, so that a turning direction can not be lighted at a stage before entering the curved part</u>.

(Ex. 1012, 1:21-29, emphasis added.)

80. On review of the Gotou reference in its entirety, a POSA would also understand that Gotou does not disclose: 1) LEDs or any other "digital" lighting source; 2) fixed or non-moveable light sources, 3) headlamps with multiple light sources with corresponding multiple optical axes; 4) any light sensor or other sensor to detect forward vehicles, or 5) any functions related to anti-blinding or preventing glare.

E. Karlsson: PCT Application Pub. No. WO1998/054030

81. Karlsson discloses a "Lighting Device Having a Controllable Lighting Pattern," wherein light sensors are interspersed with the LED "spotlight beams" to provide anti-blinding functionality, and the LEDs are dimmed during light sensor measurements so light from the LEDs doesn't interfere with detecting light from

oncoming traffic. (Ex. 1010, Abstract, 2:10-29.)

82. Despite the lack of details, one consistent and reasonable interpretation emerges from the Karlsson reference when viewed in totality along with the referential prior art, contemporaneous evidence, applicable regulations and Petitioner's own admissions: Karlsson, like Beam, forms emitted beam 7 (Fig. 1) by using the entire beam array at full intensity, except when avoiding glare, at which point, window 50, of reduced illumination (Fig. 14) is created to address glare situations. Per Karlsson, this configuration creates an "optimum" lighting effect — which, in Petitioner's words, results from "maximiz[ing] the area that is fully illuminated." (Ex. 1010, 2:7-9; Petition at 73.) Moreover, per Karlsson, main beams are optimized for long range illumination (Ex. 1010, 1:19-20) and "constant" main beam usage is "highly desirable" (*Id*., 1:21-24). Karlsson's removal of situational glare permits this.

1. Karlsson's Window 50 Depicts Illumination Being Reduced for Situational Glare

83. Karlsson's lighting device includes a headlamp embodiment that provides a light beam 7 usable for driving, which includes dipped-beam LEDs (low beam), main-beam LEDs (high beams), and combined dipped/main beam LEDs that span the full width of the LED array. (Ex. 1010, 19:24-28; 20:24-29.)

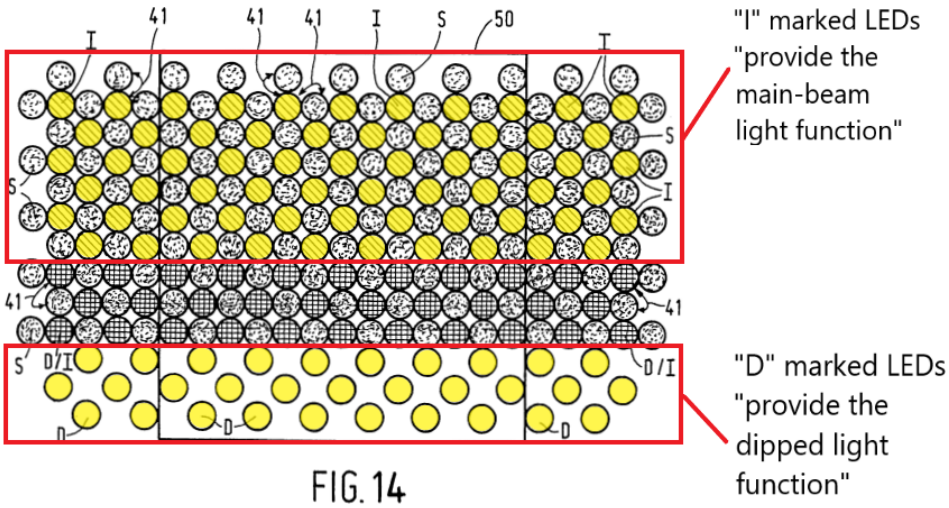

(Ex. 1010, Fig. 14, Annotated)

84. In Fig. 14, for example, Karlsson discloses that "spotlight sources indicated at D provide the dipped light [low-beam] function **in accordance with existing vehicle headlights**," and "sources indicated at I provide the main-beam light function of **existing vehicle headlights**." (Ex. 1010, 19:22-28, emphasis added). Karlsson also discloses that the "spotlight sources indicated at D/I are both operative as dipped and main beam lights." (*Id.*)

85. In normal driving situations where glare adjustment is not needed, Karlsson's array would operate "**to the greatest extent possible**" (as Petitioner admits), i.e., the entire main beam and dipped beam would be on full intensity—to "perform the function of existing headlights." (Ex. 1010, 19:22-28; Petition at 74.)

86. For example, Figure 1A below illustrates Karlsson's Fig. 14 LED array with all spotlight sources activated to collectively emit a beam of light 7; and

Figure 2A illustrates an "existing headlight" with incandescent dipped (Low) and main (High) beam light sources activated to provide a comparable beam of light. While Figure 1A illustrates exemplary operation with all LEDs for the dipped and main beams on, operation of a main beam mode with only the "I" LEDs or "I" and "D/I" LEDs, but without the dipped beam LEDs results in the same analysis and conclusions.

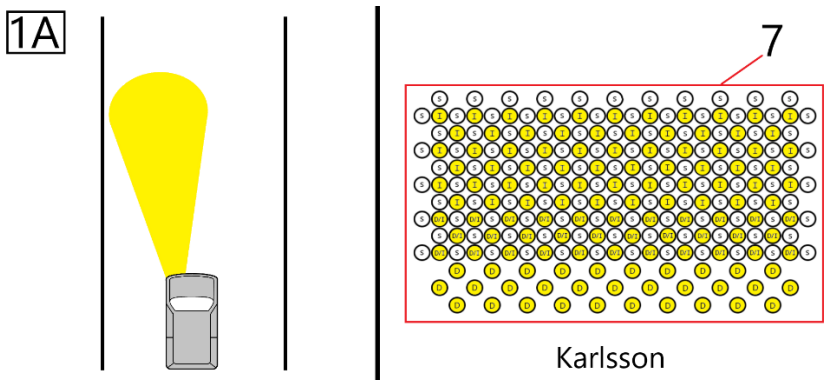

(Figure 1A, Ex. 1010, Fig. 14, Annotated)

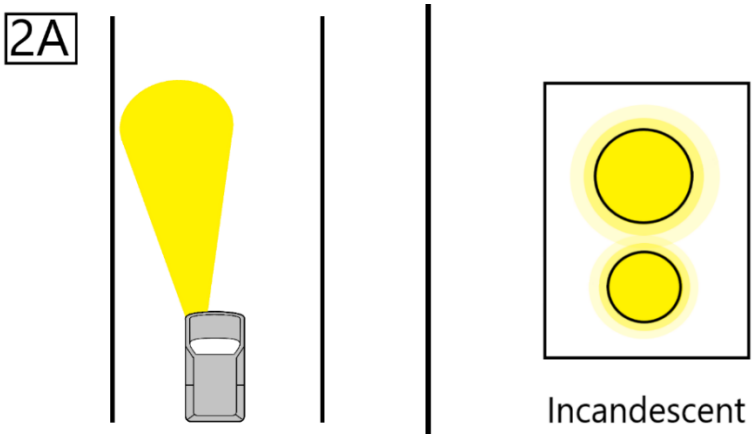

Figure 2A

87. Karlsson then uses Fig. 14 to illustrate a "reduction" control strategy to reduce emitted beam 7 in a manner that provides anti-glare functionality for specific situations, and allows for expanded usage of the main/high beam light. (Ex. 1010, 20:6-11.) The situationally adjustable beam 50 illustrates how glare reduction can be achieved.

88. Karlsson teaches that glare occurs in multiple situations when using high beams (*Id*., 1:19-26) when rapid velocity changes or overloading pitches the vehicle (*Id*., 1:30-34), and when turning (*Id*., 1:35-2:1.) Absent glare situations, Karlsson prefers providing "a light beam, the intensity of which is optimally adapted to the road and to the ambient light," meaning all spotlight sources are on. (Ex. 1010, 2:7-9, 4:17-21, 9:23-26, Fig. 1.)

89. To address glare situations, Karlsson describes adaptation via: 1) use of light sensors to detect light and to control the LED array to prevent or diminish emission in the direction of detected light (*Id*., 9:19-23); and adapting light to prevent glare. (Ex. 1010, 20:24-32.) Karlsson even explains, in the context of Fig. 14, that "an emitted light beam 50 is represented as a window which can shift" left-to-right and top-to-bottom "in dependence on the desired pattern and direction of the beam." (Ex. 1010, 19:29-33.) The window 50 in Fig. 14 is an exemplar, to illustrate the concept of situational reduction of full beam 7. As shown below in Figures 1B – 1D, the shifting window can be used to temporarily reduce the full

beam 7 in order to adapt to possible glare in exactly the situations Karlsson describes. When there is no risk of glare, beam 50 would expand its dimension to the greatest extent possible – i.e., to fully utilize the array and create full beam 7.

90. Karlsson addresses glare caused when a vehicle is taking a curve, the beam may be "adapted" (shifted) away from the other lane. (Ex. 1010, 1:34-2:1; 20:29-32.) This shift, however, is not a shift of the entire main driving beam 7, it is a temporary **reduction** of the beam aimed at the opposite lane, achieved by temporarily shutting off some portion of the array. Figures 1B and 1C below illustrate Karlsson's Reduction Control Strategy during a turning maneuver, showing possible shifts in right and left turns, respectively.

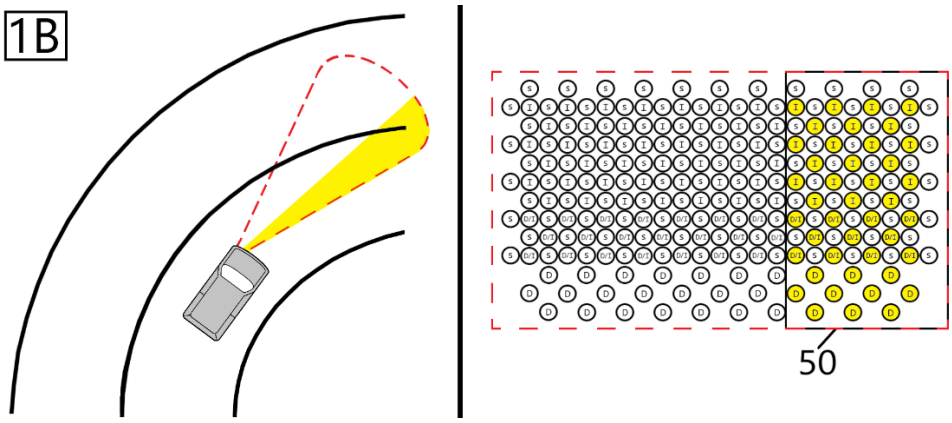

(Figure 1B, Ex. 1010, Fig. 14, Annotated)

91. The above Figure 1B illustrates a full beam in dashed red-line as the vehicle takes a sharp right turn. Figure 1B also illustrates a reduced beam portion

in yellow line, according to Karlsson's Reduction Control Strategy to avoid glaring illumination spillover onto the opposing lane. This beam reduction may be achieved by deactivating the LEDs on the left side of the array, "shifting" the window 50 to the right, as illustrated above. (Ex. 1010, 20:23-32.)

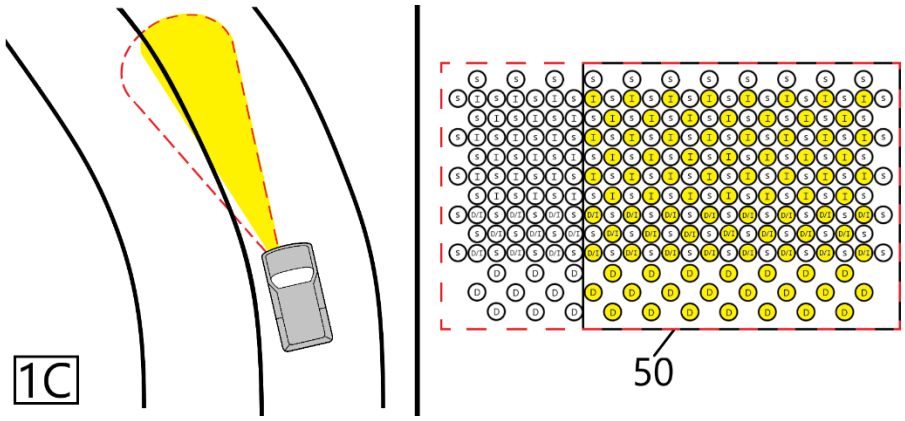

(Ex. 1010, Fig. 14, Annotated)

92. Figure 1C illustrated above depicts a vehicle taking a gradual left turn. The beam may be reduced using Karlsson's Reduction Control Strategy to deactivate LEDs on the left side of the array, shifting the window 50 to the right again based on direction sensor 54, but less so. The remaining yellow beam is wider than the one illustrated in Figure 1B due to the gradual nature of the turn, since there would be less potential glaring light than with a sharp turn. (Ex. 1010, 20:23-32.)

93. In reference to Figure 16, Karlsson also addresses glare caused when a vehicle pitches due to velocity changes or is overloaded-- the inclination sensors

detect "any deviation from the horizontal position," allowing the pitched beam, possibly glaring other drivers, to be "shifted" down via deactivation of the upper rows of the array, as shown in Fig. 1D below. (Ex. 1010, 6:26-30.)

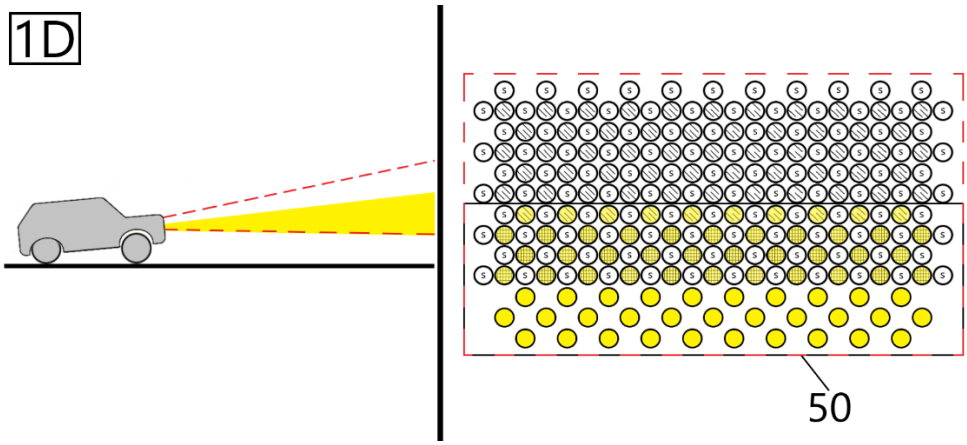

(Ex. 1010, Fig. 14, Annotated)

94. Thus, Karlsson deals with a variety of possible glare situations. If light-detection is the predicate for possible glare, light beam 7 is selectively reduced (*Id*., 5:28-32) as needed. If the vehicle is pitched, the light beam 7 is adapted to account for pitch (*Id*., 20:25-29) – per the vertical shift example described with reference to Fig. 14. If the vehicle is taking a curve, the light beam 7 is adapted to prevent glare in the opposite lane (*Id*., 20:29-33) — per the horizontal shift described for Fig. 14.

2. The Base Device That Karlsson Improves Takes A Similar Approach To Situationally Reducing Full Emission

95. Karlsson describes that it seeks to improve aspects of a prior art

device of the "type known from" WIPO Patent Publication WO 86/05147 ("Flaaten," Ex. 2017), which uses light sensitive detectors and a control unit to detect and control the light distribution pattern of a headlight "based on the distribution of detected light." (Ex. 2017, Abstract; Ex. 1010, 1:1-7) Flaaten, Karlsson's base device, states a clear objective: the light from a vehicle is dipped selectively so that "**only that portion of the light is removed that would otherwise inconvenience the driver of oncoming cars**… at the same time as the roadway, the edges of the road, curves, etc. are satisfactorily illuminated." (Ex. 2017 at 1-2.) Karlsson even explains that the Flaaten "prior art lighting device" "retain[ing] an **optimum lighting** effect for the driver of the vehicle…" (Ex. 1010, 2:2-9.)

96. Flaaten, like Karlsson, recognizes the desire for full illumination to the "greatest extent possible" while also removing glare: "It is … desirable to enable such control of the light that **only the portion of the light that would inconvenience the driver of meeting cars is removed**, **leaving as much as possible of the roadway and the surroundings illuminated**." (Ex. 2017 at 1.) The reduced illumination provided by window 50 corresponds with Karlsson's desire to retain "an optimum lighting effect," even under glaring situations, per the base device in Flaaten.

F. Nakamura

97. The disclosure cited from Nakamura is substantially the same as Satonaka. Similar to Satonaka, Nakamura discloses a camera 22 that is mounted "[a]t the top of this windshield glass 14 and inside of vehicle 10 (at the driver's visual field position, or in other words, near the driver's eyepoint)." (Ex. 1013, [0012].) Nakamura also discloses the same image processing strategy as Satonaka – namely, using the image to determine the distance between vehicles and limiting intense illumination to that distance based on the size of that distance, as determined from the image. (Ex. 1013, Fig. 10.)

VIII. Claims 32, 33, 41 and 48-49: The Complete Omission of Elements Constitutes a Fatal Failure of Proof Under 35 U.S.C. § 312(a)(3) and 37 C.F.R. §§ 42.22(a)(2)

A. Claim 32

98. Independent claim 32 requires "*one or more sensors, including one or more cameras, placed on the structure for detecting coordinate-specific information about the illuminated area and positioned to capture an image of at least one target*." (Ex. 1002, 993.) As illustrated in the following table, Petitioner's reproduction of claim 32 in the Appendix is missing this claim language:

Claim 32 (Ex. 1002, 993-994)	Petitioner's Incorrect Reproduction of Claim 32 (Petition at 116-117)
32. An illuminating device having	32. An illuminating device having

automatic control of light provided to an illuminated area comprising:	automatic control of light provided to an illuminated area comprising:
* * *	* * *
one or more sensors, including one or more cameras, placed on the structure for detecting coordinate-specific information about the illuminated area **and positioned to capture an image of at least one target**, at least one of said cameras in communication with power, and in communication with at least one of the one or more processors;	one or more sensors, including one or more cameras, placed on the structure for detecting coordinate-specific information about the illuminated area, at least one of said cameras in communication with power, and in communication with at least one of the one or more processors

99. The Petition does not address the "*capture an image of at least one target*" limitation. (Petition at 28-31; 62-64.)

B. Claim 33

100. The Petition does not address the "*wherein the data includes image data"* limitation of claim 33. (Petition at 42-43;74-75.)

C. Claim 41

101. The Petition does not address the "*wherein the data includes image data"* limitation of claim 41. (Petition at 45;77.)

D. Claim 48

102. Claim 48 requires enabling the controller to "*illuminate a portion of at least one object . . . by selecting a first cluster of the LEDs to emit first light directed towards a first area . . .* ***the first light determined based at least in part on classifying the object based at least in part on the data***." (Ex. 1002, 0995.) Petitioner identifies this limitation as claim [48.9a] at page 128 of the Petition. However, Petitioner's analysis of claim 48 ends with claim limitation [48.8b] and does not address this missing limitation. (Petition at 45-46, 78.)

E. Claim 49

103. The Petition does not address the "*wherein the data includes image data"* limitation of claim 49. (Petition at 46-47;78-79.)

IX. Grounds for Challenge

A. Ground 1 – Beam and Satonaka

1. Independent Claims

a. Claim 24 – The Beam-Satonaka Combination does not teach a controller enabled to "*change emission of the selected cluster of LEDs relative to emission of other LEDs not included in the cluster*."

104. Claim 24 requires a controller enabled to "*change emission of the selected cluster of LEDs relative to emission of other LEDs not included in the cluster ...*" The plain meaning of emission is "something sent forth by emitting"

(www.merriam-webster.com/dictionary/emission) or "the production and discharge of something, especially gas or radiation" (www.google.com, Oxford Languages). Thus, claim 24 requires an emission (**something** sent forth) from both the selected cluster of LEDs and the other actively emitting LEDs not in the selected cluster (a relativistic comparison). This plain meaning is consistent with the '551 Patent specification which teaches three different operating states for the light emitting elements: 1) "operating at full power"; 2) "operating at a fraction of" full power at a reduced intensity and 3) "not operating." (Ex. 1001, 19:26-33.) Per the '551 Patent, shutting off a light element is distinct from reducing intensity of the light element. (Ex. 1001, 65:31-35.)

105. Petitioner relies on Beam's disclosure that "the area of the beam that would dazzle the driver will be darkened" arguing incorrectly that "[r]educing illumination is 'chang[ing] emission' as claimed because the reduced illumination lowers the intensity of the LEDs." (Petition at 35.) Beam does not "*change emission*," instead it zeros or blanks emission. Beam generates a darkened area of reduced illumination by blanking or inactivating associated LEDs so they are not "active emitters". Controller 108 "uses the data to determine the size and position of the light emitters to be dimmed. The output of the active emitters is projected through the optical system." (Ex. 1005, 5:13-16.) Beam distinguishes active emitters from inactive or blanked emitters. This understanding further comports

with Beam's teaching about attenuating (blanking) light (*Id*., 4:36-57), an area of a beam being "darkened" (*Id*., 2:60-62), and the description of both "dimming" an area and describing that area as a "blanked" area. (*Id*., 6:23-27.) While Petitioner relies on Beam's disclosure: "illumination in the shaded areas being reduced significantly to protect the vision of the oncoming drivers" (*Id*., 4:23-24), the reduced illumination results from blanking a cluster of LEDs such that the cluster is inactive and not emitting light; residual illumination in the shaded areas is the result of spillover light. Because Beam teaches a binary system, where the changed LEDs are zeroed or blanked, the system no longer produces emission. As such, Beam fails to teach "*chang[ing] emission of the selected cluster of LEDs relative to emission of other LEDs not included in the cluster*" as required by Claim 24.

b. Claim 32 – The Beam-Satonaka Combination does not teach a controller enabled to "*create a beam of diminished illumination*" or the ability to "*follow. . .the at least one target with the diminished illumination*"

106. Independent claim 32 requires a controller enabled to "*create a beam of <u>diminished illumination</u> <u>illuminating</u> at least a portion of the at least one target with non-glaring illumination, created within a broader field of illumination having different intensity than the beam*." Petitioner relies on Beam's disclosure at 2:56-3:3, 4:21-25, 4:57-5:2 for satisfying this limitation. (Petition at 40.) Petitioner describes Beam's disclosure as teaching "reducing the intensity of the area of the

beam." (Id.) As explained below, Beam teaches blanked or no illumination, not "*diminished illumination*" that is still "*illuminating*" something.

107. Beam discloses that "[b]y controlling an area determined by analyzing the position of the lights sensed ahead, the area of the beam that would dazzle the driver will be darkened." (Ex. 1005, 2:56-3:3.) Beam discloses darkening areas by blanking microbeams: Controller 108 selectively commands reduction of the energy of the microbeams falling on a particular object or objects by "command[ing] spatial light modulator 203 in illuminator 109 to either divert the selected microbeams or to attenuate them." (Ex. 1005, 4:53-57, Figs. 1-2.) Further, Beam discloses that "[a]s the positions of both vehicles move, the blanked area tracks the location of the oncoming vehicle, dynamically varying in position and in size." (*Id.*, 6:24-27.) Beam discloses darkening areas by controlling a spatial light modulator 203 or LEDs to "blank" microbeams emitted by a light source. (*Id.*, 4:36-40.)

108. The plain meaning of illuminate is "to supply or brighten with light" or "to make luminous or shining." (www.merriam-webster.com/dictionary/illuminate.) The claimed "*beam of diminished illumination*" is "*create[d]*" by "*one or more changes to characteristics of first light of a cluster of the LEDs providing the first light*." Because Beam discloses darkening/blanking the cluster of the LEDs providing the first light, Beam does not

teach a controller enabled to "*create a beam of diminished illumination illuminating*" as claimed. Additionally, because Beam detects illumination sources within the field-of-view and engages in a coarse blanking of all associated microbeams around the illumination sources, the Beam-Satonaka combination fails to teach a controller enabled to "*follow the at least on target with the diminished illumination*" as the "*target changes location*" as claimed.

c. Claim 40 –The Beam-Satonaka Combination does not teach a controller enabled to "*diminish glaring illumination . . . by a first change . . . [and] a second change . . . [that] decrease intensity of first emission from the first cluster and second emission from the second cluster relative to a third emission*."

109. Independent claim 40 is directed to decreasing the intensity of emission from first and second clusters of LEDs to a lower, non-zero intensity. For example, claim 40 requires a controller that can:

> diminish glaring illumination of the first other vehicle by a first change to one or more characteristics of first light of at least the first cluster;
>
> * * *
>
> diminish glaring illumination of the second other vehicle by a second change to one or more characteristics of second light of at least the second, different cluster,

> wherein the first and second changes decrease intensity **of first emission** from the first cluster **and second emission** from the second cluster **relative to a third emission**, from the at least one headlamp, illuminating an area between the first and second portion.

110. The claimed "*decrease[d] intensity of first emission… and second emission . . . relative to a third emission*" indicates a relativistic level of emission from the first, second and third cluster. Emission is a discharge of light, and is not achieved by a darkened light, *i.e.*, non-emission. Similar to claim 32, Petitioner relies on Beam's disclosure with reference to the spatial light modulator 203 at 2:56-3:3, 4:57-59 for satisfying this limitation. (Petition at 43 *citing* claim 24.10 analysis.) Petitioner describes Beam's disclosure as teaching darkening or reduced emission.

111. Beam discloses that "[b]y controlling an area determined by analyzing the position of the lights sensed ahead, the area of the beam that would dazzle the driver will be darkened." (Ex. 1005, 2:56-3:3.) Beam discloses darkening areas by blanking microbeams: Controller 108 selectively commands reduction of the energy of the microbeams falling on a particular object or objects by "command[ing] spatial light modulator 203 in illuminator 109 to either divert the selected microbeams or to attenuate them." (*Id.*, 4:53-57, Figs. 1-2.) The plain meaning of emission requires "an act or instance of emitting." (www.merriam-webster.com/dictionary/emission.) Therefore, Beam's disclosure of blanking, or

providing no light, does not teach a controller enabled to "*diminish glaring illumination . . . by a first change . . . [and] a second change . . . [that] decrease intensity of first emission from the first cluster and second emission from the second cluster relative to a third emission"* as claimed.

d. Claim 48 – The Beam-Satonaka Combination does not teach a controller enabled to "*illuminate a portion of at least one object . . . by selecting a first cluster of the LEDs to emit first light. . . and the first light determined based at least in part on <u>classifying the object</u> based at least in part on the data*."

112. Claim 48 requires a controller enabled to "*illuminate a portion of at least one object . . . by selecting a first cluster of the LEDs to emit first light. . . and the first light determined based at least in part on classifying the object based at least in part on the data.*" Petitioner does not address this limitation. (Petition at 45-46.) Beam discloses using an imaging sensor (such as a video camera) to determine where there are illumination sources within the field-of-view and blanks associated microbeams illuminating a predetermined area around the illumination sources. (Ex. 1005, 6:9-24.) Beam does not disclose identifying a particular target associated with the predetermined area around the illumination sources.

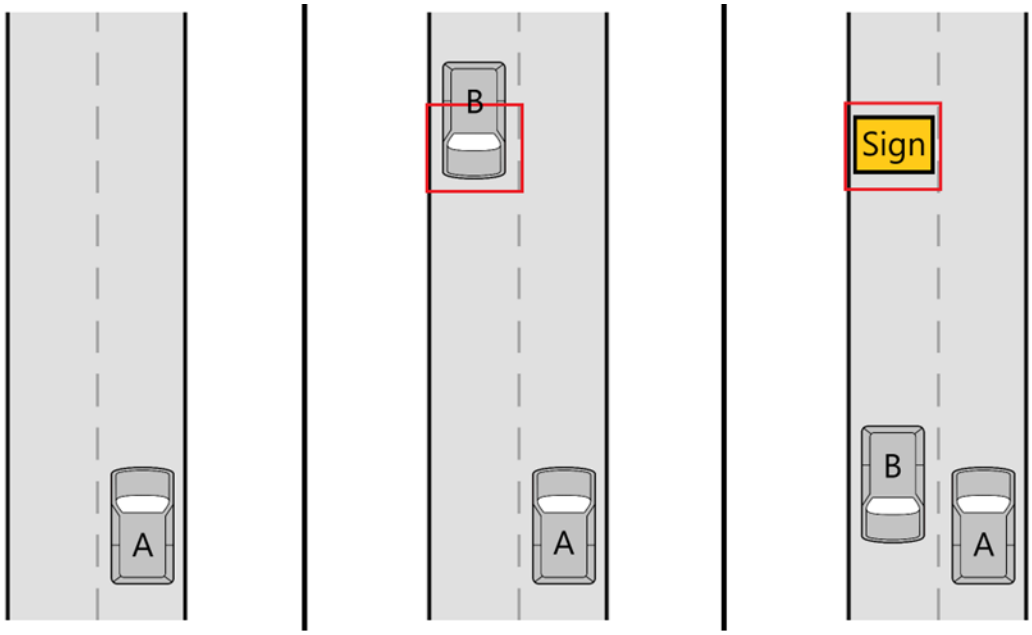

Fig. 1 Fig. 2 Fig. 3

113. As illustrated in the above Figures 1-3, vehicle A having Beam's AABH system will blank microbeams associated with a predetermined area represented by the red box in response to detecting an illumination source. Beam does not identify the targets and therefore cannot distinguish between the red box associated with vehicle B in Fig. 2, from the red box associated with reflection of light from an overhead sign in Fig. 3, for example. This would result in Beam's system blanking microbeams directed at the boxed areas with corresponding undesirable reduced illumination of the sign in Fig. 3. While this may result in a darkened area that changes position in response to detected light changing position, Beam does not associate the detected light with a particular target (vehicle or sign). Each subsequent detection of light is performed anew and has no relationship to a

prior detection, and may or may not correspond to the same target, *i.e.*, whether detected light is a new position of a previously detected target, or a new target. As such, Beam does not disclose or suggest "*classifying the object*," as claimed.

2. Dependent Claims:

a. Claims 25/33/41/49 – The Beam-Satonaka Combination does not teach "*select[ing] a cluster of the LEDs that emit light toward at least a portion of the other vehicle*" where "*the cluster includes a plurality of the LEDs and the cluster includes non-contiguous LEDs*."

114. Claim 25 depends from claim 24 and is representative of claims 33, 41, and 49. Claim 24 requires a controller that is enabled to "*select a cluster of the LEDs that emit light toward at least a portion of the other vehicle*." ("*vehicle*," singular.) Claim 25 further requires that the "*the cluster includes a plurality of the LEDs and the cluster includes non-contiguous LEDs*."

115. Petitioner relies on Beam's disclosure regarding glare reduction for multiple vehicles at 2:62-63 and Figure 1 for satisfying this limitation. For example, Petitioner states that "when there are two or more separated vehicle targets, as would be the case in most situations with **multiple** other vehicles present, Beam's system would select a cluster of LEDs that are non-contiguous to cover all of the vehicle targets." (Petition at 36-37.) However, Beam's teaching regarding multiple vehicles is not relevant to the claimed "*cluster*," which is also

claimed as the cluster being used to control light directed to a **singular** "*other vehicle*." Thus, Petitioner's analysis is directed at two clusters which are non-contiguous with each other and which both deal with different vehicles, but that is not "*the cluster* ***of LEDs that emit light toward… the other vehicle*****,**" where **that** "*cluster includes non-contiguous LEDs*" as claimed.

116. The '551 Patent discloses that by selecting a cluster of non-contiguous LEDs for illuminating a single "*other vehicle,*" the system may adjust the characteristics of the LEDs such that the emitted light is less offending when another vehicle is present. For example, the '551 Patent discloses, with reference to Figure 15, that the "concept cluster shown by the dashed lines, is used to describe a control function and is not necessarily related to contiguous placement." (Ex. 1001, 53:28-30.) The cluster 276 includes LEDs "of different wavelengths, operating in unison at different power levels [to] yield a variable light 'color'." (*Id*., 53:37-39.)

117. The cluster may include a first LED 275 having a "blue, 470 nanometer" wavelength, and a second LED 277 having "an amber 590, nanometer wavelength" that are "coincidentally aimed" to collectively "yield a 'white' light similar to the yellow tint of sunrise at the correct power intensity setting for each lamp." (*Id*., 53:39-43.) As illustrated in Figure 15, LEDs 275 and 277 are spaced apart from each other and non-contiguous. Further, "when following another vehicle, assuming, as drivers have reported, that they find yellow incandescent

colored headlamps less offending than the HID blue-white color, the external controller 279 which receives traffic data from sensors 280 would shift wavelength specific radiant power contributions of SLSs such that the resultant on the CIE chromacity diagram would be yellowish." (*Id*., 53:46-52.) However, when there is "no car immediately ahead or oncoming traffic, then assuming as drivers reported they see further with bluish light, then the energy of the 490 nanometer LED is increased, and the resultant color will shift to bluish white, allowing the driver to better ascertain road conditions further up ahead." (*Id*., 53:52-57.)

118. The Beam-Satonaka combination does not teach "*select[ing] a cluster of the LEDs that emit light toward at least a portion of the other vehicle*" where "*the cluster includes a plurality of the LEDs and the cluster includes non-contiguous LEDs*" as claimed.

b. Claims: 30/38/46/54 – The Beam-Satonaka-Kobayashi Combination Does Not Teach "*Optical Control Elements to control light emitted from one or more of the LEDs*"

119. Claim 30 is representative of claims 38, 46, and 54 and requires "*one or more optical control elements to control light emitted from one or more of the LEDs*." Petitioner states that "Beam discloses these claims with at least beamsplitter 201 and spatial light modulator 203." (Petition at 39.) However, the Beam-Satonaka-Kobayashi Combination does not include Beam's spatial light

modulator 203 because "the lamp 202 and spatial light modulator 203 are replaced by an array of light sources 401" (Petition at 24 quoting Ex. 1005, 5:3-6.)

120. Beam discloses that the beamsplitter 201 reflects received external light toward a light sensor: "Rays from the scene come in through optical system 106. A portion of these rays is reflected by a beamsplitter 201 to sensor 107 which is illustrated as a camera in this embodiment." (Ex. 1005, 4:27-30.) Petitioner's expert confirmed that the beamsplitter does not control the light emitted from the LEDs because "the beam splitter typically are processed with specific reflective coating so the emitting lights will be minimally affected . . . It's like one-way mirror. . . [in an] interrogation room and other people see you, you don't see them." (Ex. 2018 at 21:17-19.)

121. Petitioner further states that "reflectors and lenses can control the light from at least one of the microbeams (e.g., emanating from its LEDs)." (Petition at 39.) However, Beam's disclosure of reflectors and lenses is in its background disclosure of prior art "systems which attempt to control the intensity profile of the beam by using a reflector or lens shaped to control the output beam in some predetermined way." (Ex. 1005, 1:63-65.) Petitioner does not explain how this general reference to prior art reflectors or lens relates to Beam's system.

122. The Beam-Satonaka-Kobayashi Combination Does Not Teach "*one or more optical control elements to control light emitted from one or more of the*

LEDs" as claimed.

123. Intentionally left blank.

124. Intentionally left blank.

c. Claims: 31/39/47/55 – The Beam-Satonaka-Kobayashi Combination Does Not Teach "*wherein the optical control elements include at least one of one or more reflectors, refractors or lenses*."

125. Claim 31 is representative of claims 39/47/55 and requires "*wherein the optical control elements include at least one of one or more reflectors, refractors or lenses*." Petitioner relies on Beam for satisfying this limitation and cites its analysis in Section VI.E for claims 30/38/46/54. (Petition at 39.) However, Beam's only disclosure of reflectors and lenses is with reference to the prior art (Ex. 1005, 1:63-65) and Petitioner does not explain how this general reference to prior art reflectors or lenses relate to Beam's system. The Beam-Satonaka-Kobayashi Combination does not teach all claimed features.

3. A Person of Ordinary Skill in the Art Would Not Have Been Motivated to Combine Beam and Satonaka

a. Petitioner Fails to Explain Why, Absent Hindsight, a POSA Would Have Combined Beam and Satonaka

126. As I explained in my state of the art section above (¶¶25-38), LED headlamps were under development in the early 2000's, a myriad of complex, interrelated technical issues were being solved at the time and thus there were no

known techniques to address known problems in the LED headlamp art using prior art elements according to their established functions. As explained below, LED headlamps are significantly different devices than conventional headlamps, and therefore in the early 2000's each LED headlamp design required optical, heat management, and packaging considerations, all of which affected cost.

127. Petitioner does not explain how a POSA would have combined Beam and Satonaka. Further, Beam and Satonaka describe headlamps that provide adaptive lighting in significantly different ways, therefore the combination would render Beam unsuitable for the purpose of providing anti-blinding light. By ignoring these issues, the Petition illustrates clear hindsight bias.

128. Petitioner's hindsight theory undermines the Petition's alleged motivation for combining the applied references—to improve driving safety. (Petition at 20.) Except for identifying elements of the Challenged Claims to engage in hindsight reconstruction, Petitioner fails to explain why it would have been obvious to combine Beam and Satonaka when the combination results in an unsuitable form of anti-blinding illumination.

129. Intentionally left blank.

b. Petitioner Does Not Explain How a POSA Would Have Combined Satonaka's Remote Sensor Based Image Processing Algorithm with Beam's Co-located Sensor.

130. Petitioner states that "it would have been obvious to a POSA to modify Beam's system to map each pixel with coordinates, as taught by Satonaka, to provide the algorithmic detail implicit in Beam." (Petition at 29.) "Thus, Beam's camera would detect the claimed 'coordinate-specific information,' as modified by Satonaka." (*Id*.) Petitioner fails to explain how an image from Beam's co-located and boresighted camera would be used by Satonaka's vehicle recognition zone image processing algorithm that uses a reference frame based on a remote camera located at the top center of the windshield and that expressly defines subsequent processing from the visual perspective of its mounting location.

131. Beam discloses, with reference to Figures 5 and 6 below, mounting the imaging sensor 107 within the headlight assembly. Beam explains that mounting the sensor within the headlamp assembly ensures accuracy "[t]he sensor will be co-located with the light source so that errors in alignment are automatically compensated." (Ex. 1005, 2:63-65.)

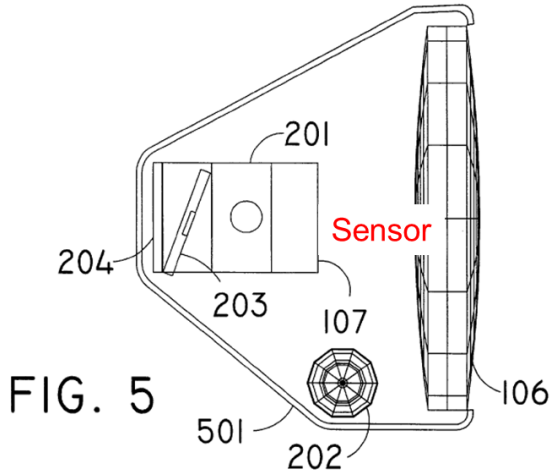

FIG. 5

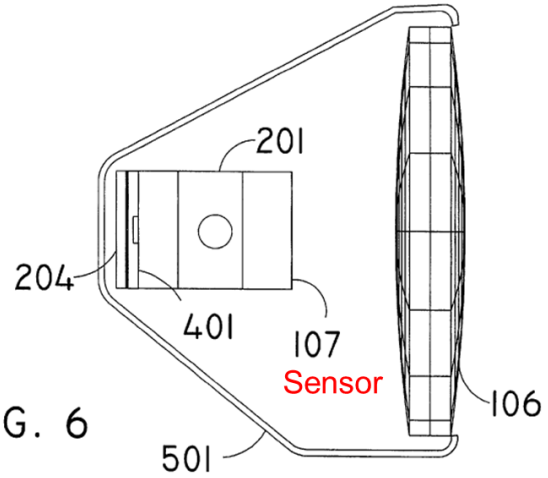

FIG. 6

(Ex. 1005, FIGs. 5, 6, Annotated)

132. Satonaka discloses headlamps 18 and 20 that are provided on the top part of the front bumper 16, and a camera 22 that is mounted "[a]t the top of this windshield glass 14 and inside of vehicle 10 (at the driver's visual field position, or in other words, near the driver's eyepoint)." (Ex. 1014, [0017].)

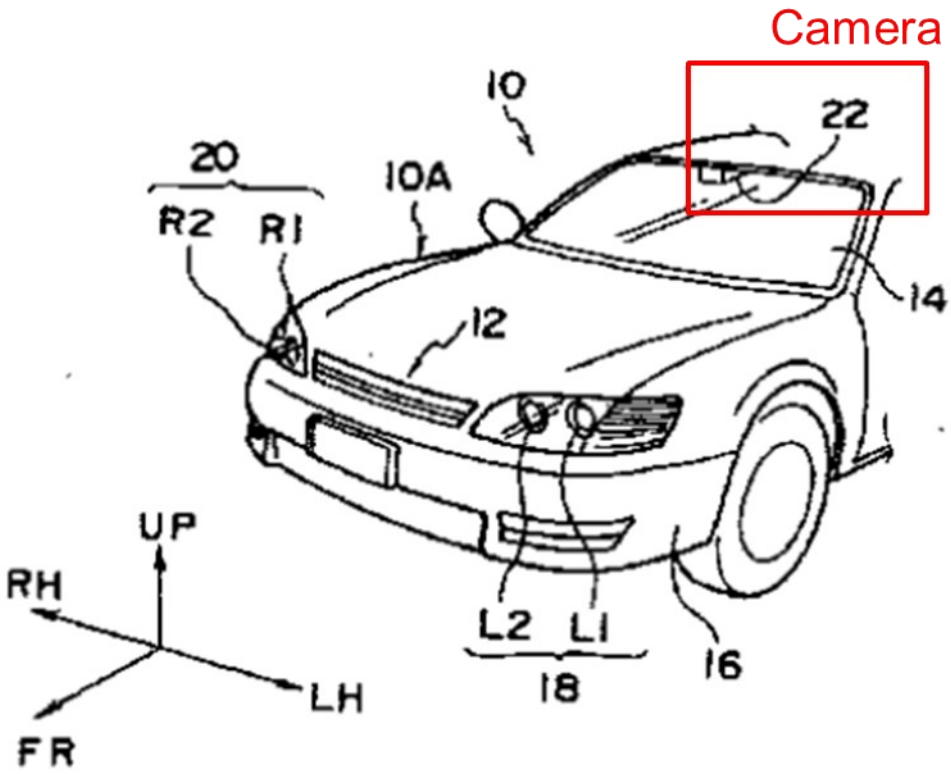

(Ex. 1014, Fig. 1, Annotated)

133. Satonaka mounts a camera at the center of the windshield near the driver's eyeline. (Ex. 1014, [0016], Fig. 1.) From this perspective, the camera generally sees the road as the driver does, with preceding traffic centered between lane markers, and lane markers largely visible on either side of a vehicle. (*Id.*, Fig. 4, 12.)

134. Petitioner further states that "Satonaka provides details of how to implement the coordinate mapping of its pixels. . . This would have provided a POSA with an easily applicable example (from Satonaka) to be implemented on a structurally similar system (Beam)." (Petition at 20.) However, the systems are not

structurally similar because the light sensors are located in different locations which significantly changes the coordinate mapping algorithm. For example, Satonaka discloses a strategy for processing the image captured at the driver's eyeline with reference to Figure 4. (Ex. 1014, [0026].)

(FIGURE 4)

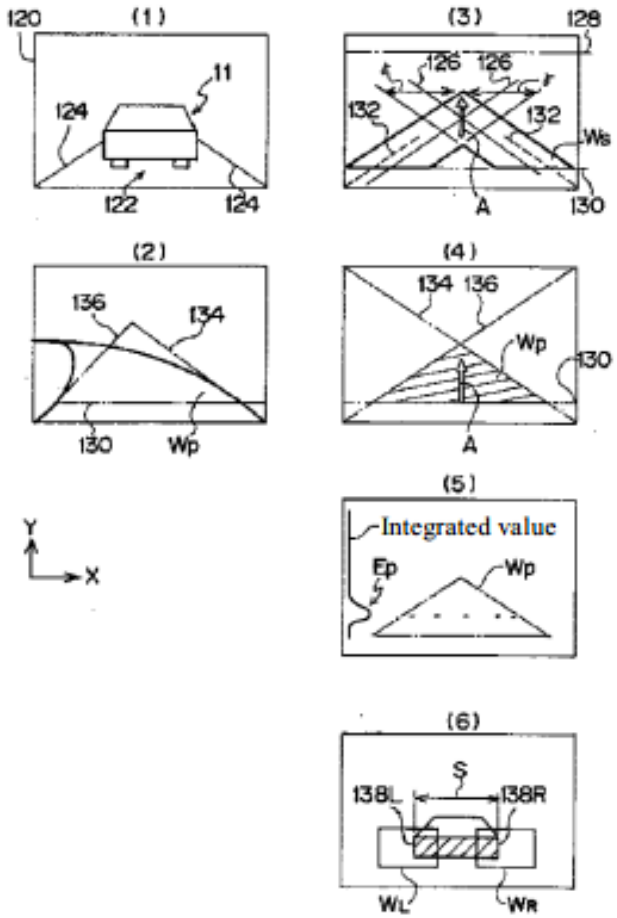

(Ex. 1014, Fig. 4)

135. Satonaka discloses an image 120 "that was obtained by camera 22, [in which a] preceding vehicle 11 is positioned within white lines 124 on both sides of

the lane of road 122 on which vehicle 10 is traveling." (Ex. 1014, [0026].) As will be appreciated from Fig. 4(1), this image appears comparable to a driver's perspective, a result of Satonaka's intentional camera placement "near the driver's eyepoint." (Ex. 1014, [0017].)

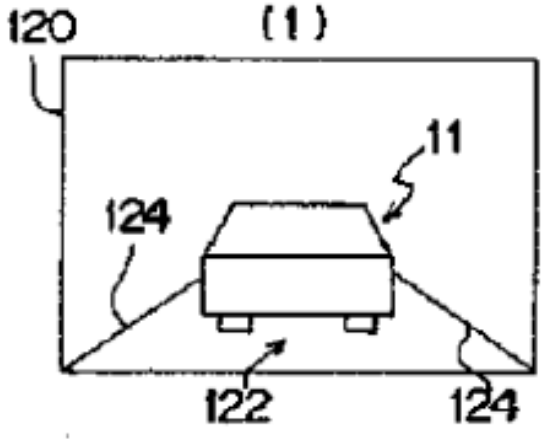

(Ex. 1014, Fig. 4(1))

136. Next, Satonaka's system "perform[s] white line candidate point extraction and colinear approximation processing" to winnow the image down to an area-of-consideration called the "vehicle recognition region W_P," which coincides with the lane of travel. (Ex. 1014, [0027]).

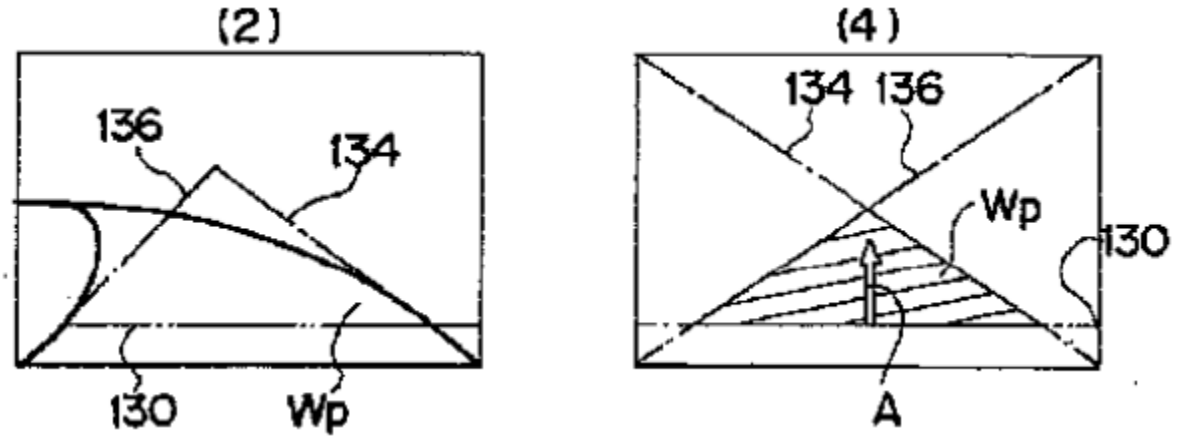

(Ex. 1014, Figs. 4(2), 4(4))

137. That is, from the camera perspective at the eyeline of the driver, where the preceding vehicle is visible between the also-visible lane lines, Satonaka derives a vehicle recognition region W_P that is bounded by the lane lines on either side, extended to intersection at an apex. (Ex. 1014, Fig. 4(3).)

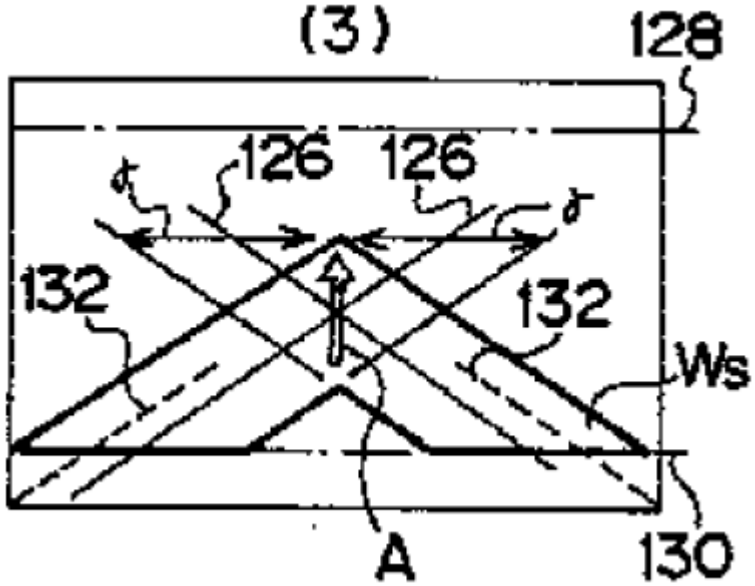

(Ex. 1014, Fig. 4(3))

138. Satonaka then performs "detection processing" on illumination within

W_P, which can include, at least, detection of light in some instances. (Ex. 1014, [0030], [0031].) Then Satonaka treats the light in the bounded region as though it came from a vehicle – "If a continuous point … is stably detected within the window regions, it will be adjudged that preceding vehicle 11 is present." (Ex. 1014, [0031].) Satonaka teaches **both** predicates, detected light and that the light be within the recognition region, in order to determine the presence of the vehicle.

139. Satonaka discusses further refinement of a second, oncoming vehicle recognition region W_{P0}, in order to refine the region to "region W_{OO} that includes the region between the upper limit line and lower limit line [in Fig. 5] as determined in advance and <u>in which there is high probability of the presence of oncoming vehicle</u> 11A." (Ex. 1014, [0035].)

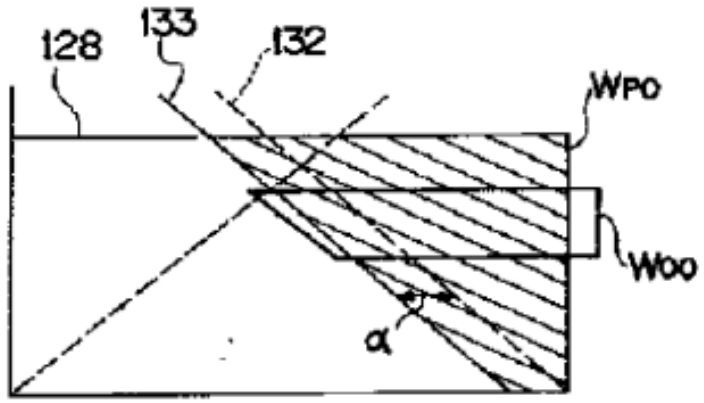

(Ex. 1014, Fig. 5)

140. Satonaka discloses processing an image 120, from the driver's viewpoint, "that was obtained by camera 22, [in which a] preceding vehicle 11 is positioned within white lines 124 on both sides of the lane of road 122 on which

vehicle 10 is traveling." (Ex. 1014, [0026].)

141. If the viewpoint were shifted, for example, to a front left or right headlamp, a number of issues would occur. I supervised a test to evaluate the impact of this viewpoint shift using two vehicles. A first vehicle, representing a vehicle having the Beam-Satonaka system, was arranged approximately thirty feet behind a forward or preceding vehicle (black SUV). A digital camera was placed at multiple locations on the first vehicle to take pictures of the preceding vehicle. The camera locations included: 1) a rear-view mirror location at the top center position of the windshield and approximately 54 inches above the road surface; 2) a lower left headlamp position approximately 34 inches above the road surface, 56 inches forward and 28 inches to the left of the 1st position; and 2) a lower right headlamp position approximately 34 inches above the road surface, 56 inches forward and 28 inches to the right of the 1st position.

142. First, as illustrated in the figures below, the perspective of the vehicle would shift horizontally and vertically downward due to the lower offset mounting location and it would be more difficult to perceive the lane markings from this position, reducing the accuracy of the algorithm. Further, for a left headlamp, the perspective of the lane markers would shift horizontally, the left-side marker would appear more vertical and the right-side marker would skew left. Similarly, for a right headlamp, the right-side marker would appear more vertical and the left-

side marker would skew right. This change in perspective and skewed lane markers distorts the shape of the vehicle recognition window (red triangle) such that both taillights of the preceding vehicle are not located within the corresponding vehicle recognition window and thus the system will fail to detect the preceding vehicle.

Lower Left Camera | Top Center Camera | Lower Right Camera

143. Further, Petitioner does not explain if the Beam-Satonaka combination uses a camera in the front left headlamp, the front right headlamp, or both. If the Beam-Satonaka combination uses a camera that is located in the front left headlamp, then the system would have the same limited functionality regarding detecting a preceding vehicle as a camera located in the front right headlamp, as illustrated in the preceding figures. If the combination uses both cameras, then Petitioner does not explain whether or how the information collected from both cameras is combined. Regardless, a camera located in either location has limited functionality regarding detecting a preceding vehicle.

144. Additionally, Satonaka does not include a mapping of coordinates to LEDs or lights in general. Nor does it even use its own coordinates directly to

control lights. Importation of a new reference system of coordinates would require remapping the LEDs to the new coordinate system. Although Petitioner never actually alleges that the coordinates are even actually used for control of anything, merely that they are stored, were a POSA to use them for control they would have to be correlated to lights in some manner. This represents another fact Petitioner does not address, other than stating that one could "simply modify software instructions stored in the memory of Beam's controller/processor (in view of Satonaka)." (Petition at 20.)

145. Instead of recognizing and addressing these engineering issues with the combination, Petitioner makes statements such as "this modification requires no physical changes," and "Beam and Satonaka use the same basic architecture." (Petition at 20.)

146. Intentionally left blank.

c. Petitioner's Proposed Combination Would Render Beam Inoperable for Its Intended Purpose of Providing Anti-Blinding Headlights

147. Satonaka describes a simplistic approach of detecting another vehicle with limited functionality. For example, as illustrated below, when the camera is located in the top-center camera location, the taillights of a preceding vehicle located ahead are present in the vehicle recognition window, which is represented by a red triangle below. However, when the camera is located in the lower-left or

lower-right headlamp position, the distorted shape of the vehicle recognition window prevents detection of the same preceding vehicle because both taillights are no longer located within the corresponding vehicle recognition window.

Lower Left Camera | Top Center Camera | Lower Right Camera

148. The proposed combination would have had very limited appeal to a POSA because it would not work well in real-world conditions. Accordingly, Petitioner's proposed combination of modifying Beam to include Satonaka's control strategy would destroy the anti-blinding utility of Beam's Anti-Blinding Headlight (AABH).

149. Intentionally left blank.

B. Ground 2 – Beam, Satonaka, and Kobayashi

1. Claims: 27/35/43/51 – The Beam-Satonaka-Kobayashi Combination Does Not Teach "*non-contiguous LEDs*."

150. Claims 27, 35, 43, and 51 each require "*non-contiguous LEDs*." Petitioner references its analysis of claim 25 for satisfying this limitation, and

states that "[i]n Beam, a POSA would have been motivated to adapt the LED light pattern to illuminate the road curve by altering, for example, the intensity or distribution of the LEDs so that the curved roadway is properly lit." (Petition at 52.) As explained above for claim 25, Petitioner relies on Beam's disclosure regarding glare reduction for multiple vehicles, but this teaching is not relevant to the claimed "*cluster*" to control light directed to a singular "*other vehicle*." Therefore the Beam-Satonaka-Kobayashi Combination does not teach the "*non-contiguous LEDs*" limitations of claims 27/35/43/51 for at least the same reasons given for claim 25. (See Paragraphs 114-118.)

151. Intentionally left blank.

2. Claims: 26-29, 34-37, 42-45, 50-53 – The Beam-Satonaka-Kobayashi Combination Does Not Teach a controller enabled to "*accommodate the upcoming road curvature by adaptation of a light pattern*."

152. Claim 26 depends from claim 24 and is representative of claims 27-29, 34-37, 42-45, 50-53. Claim 26 requires that the controller is further enabled to "*accommodate the upcoming road curvature by <u>adaptation</u> of a light pattern of at least one of the at least one headlamps*." Petitioner relies on Kobayashi's disclosure that "the vehicle advancing direction is predicted" and "irradiation control of the [headlight] lamp is conducted in accordance with the course" for satisfying this limitation. (Petition at 49 quoting Ex. 1008 at 17:51-61 and 18:1-8.)

Petitioner states that "[b]y including an additional data source for Beam's controller 108, Kobayashi's map data, a POSA would have realized the safety enhancement to Beam's AABH from increasing illumination based on the road curvature." (Petition at 52.)

153. Beam discloses a headlamp that provides "the equivalent of high beam headlights or brighter on at all times, greatly enhancing the ability to see at night" except for areas where incoming light is detected. (Ex. 1005, 6:53-56.) Beam further discloses that "[t]he resulting beam is at full intensity except in areas that would dazzle a driver ahead." (Ex. 1005, 4:57-59.) Petitioner admitted in the Petition that this disclosure teaches providing a "Full Intensity" beam outside of the anti-glare region. "Thus, the first light in Beam (the reduced-intensity light) is formed in an illuminated area of different intensity (the full-intensity light)." (Petition at 40-41.) Similar to the European approach to adaptive driving beam (ADB) technology, Beam expressly requires maximal use of the high-beam at all times except where blanked to avoid blinding oncoming traffic when needed. (Ex. 2007 at 69, 71.)

154. Since Beam discloses providing maximum intensity light everywhere it could be needed, there is nothing to "adapt" or modify toward the upcoming road curvature, rendering Kobayashi's map data useless. Accordingly, the combination of Beam and Kobayashi does not teach a controller enabled to "*accommodate the*

upcoming road curvature by adaptation of a light pattern of at least one of the at least one headlamps" as claimed. The Beam-Satonaka-Kobayashi Combination does not teach all claimed features of claims 26-29, 34-37, 42-45, 50-53.

155. Intentionally left blank.

C. Ground 3 – Karlsson and Nakamura

1. Independent Claims

a. Claims: 24/32/40/48 - The Karlsson-Nakamura Combination Does Not Teach "*one or more sensors, including one or more cameras*."

156. Independent claims 24, 32, 40, and 48 require "*one or more sensors, including one or more cameras*." Petitioner relies on Karlsson's disclosure at 12:19-24 for satisfying this limitation. (Petition at 62.)

157. Karlsson discloses light-sensitive sensors 9, 23, that may be comprised of: a matrix of photo-diodes, like the spotlight sensors (S) described with reference to Figure 14, **or, alternatively**, a photo-sensitive plate as used in modern video cameras:

> In the preferred embodiment of the invention, the light-sensitive sensors 9 and 23 are preferably designed to be capable of precisely determining the direction and the intensity of the detected light 11. They may for example be comprised of a **matrix** of photo diodes **or** in the case of a light-sensitive sensor 23, a photo-sensitive plate as used in modern video **cameras**.

(Ex. 1010, 12:22-24.)

158. With reference to Figure 1, Karlsson discloses a lighting device 1 with "sensor means consisting of a light-sensitive sensor 9 and a further lens 10 disposed on the side of sensor 9 that is exposed to the incident light, such that incident light 11 on the lens 10 is formed into an incident light beam 12 on light-sensitive sensor 9." (Ex. 1010, 8:19-23.)

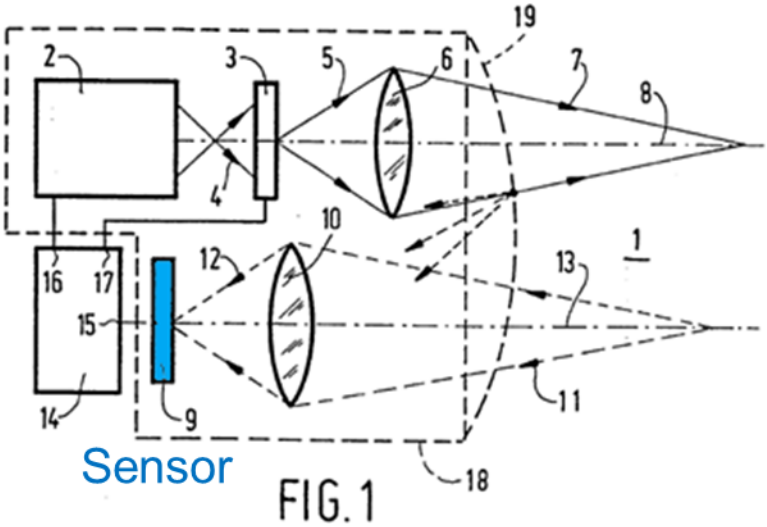

(Ex. 1010, Fig. 1, Annotated)

159. With reference to Figure 14, Karlsson discloses spotlight sensors (S) that may be formed by "photosensitive transistors." (Ex. 1010, 19:34-35.) Karlsson further discloses that "a preferred embodiment of the invention comprises spotlight sensors in the form of, for example, photosensitive diodes, photo transistors or other light- sensitive semiconductor components, which are spatially distributed in a predetermined manner or at random so as to be capable of detecting light from

desired directions or from all directions." (*Id*., 5:18-23.) Karlsson also discloses that "the term spotlight sensor used herein is understood to indicate a light-sensitive sensor of limited, physically light-sensitive dimensions, which generally detects light from a specific direction." (*Id*., 5:25-27.)

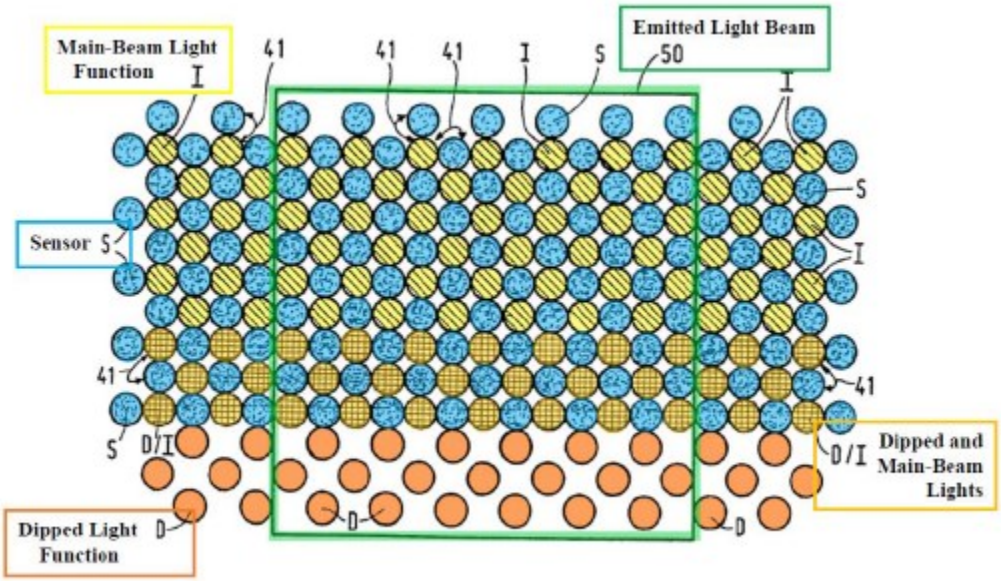

(Ex. 1010, Fig. 14; Petition at 68, Annotated by Petitioner.)

160. With reference to Figure 3, Karlsson discloses "a light-sensitive sensor 23 and light modulator means 3 are arranged between the light source 2 and the lens 6." (Ex. 1010, 11:10-11.) Notably, Karlsson does not disclose that the light source 2 described with reference to Figure 3 embodiment includes a plurality of LEDs. (Ex. 1010, 11:7-36.)

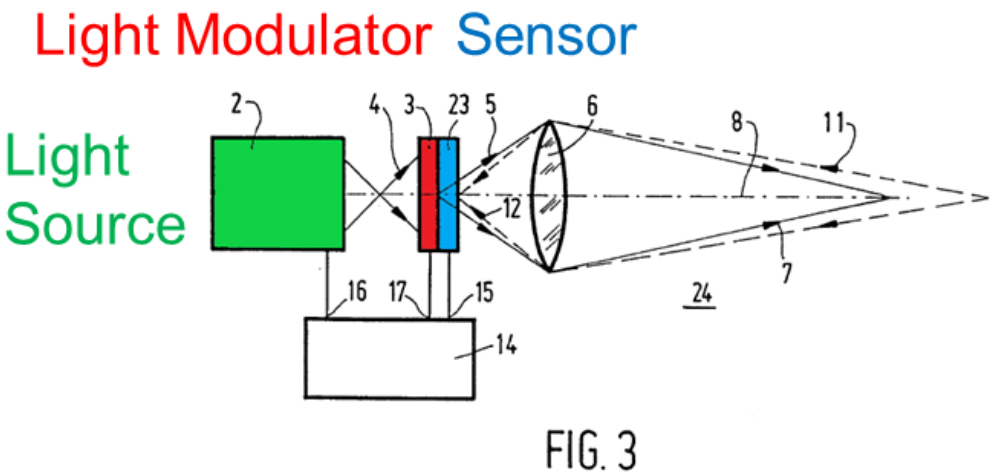

(Ex. 1010, Fig. 3; Petition at 67, Annotated.)

161. Petitioner relies on Karlsson's matrix of photo diodes as illustrated in Figure 14 for satisfying various control limitations. (Petition at 66, 68, 69, 73, 74, 75.) A matrix of photo diodes alone is not a camera. A camera also requires a lens to focus the received light, and to be able to deliver the sensed array for processing and imaging. A POSA would have known that a modern video camera in the early 2000s would have required many thousands of photosensors. For example, a VGA camera with a resolution of 640 x 480 pixels would have had over 300,000 photosensors.

162. Further, a camera would not have included photosensors interspersed with emitters because this would have resulted in undersampling, resulting in a poor quality image due to aliasing effects. Additionally, since there are no sensors in the lower region of the array, the system would not receive data in this region,

thereby further reducing the quality of any image.

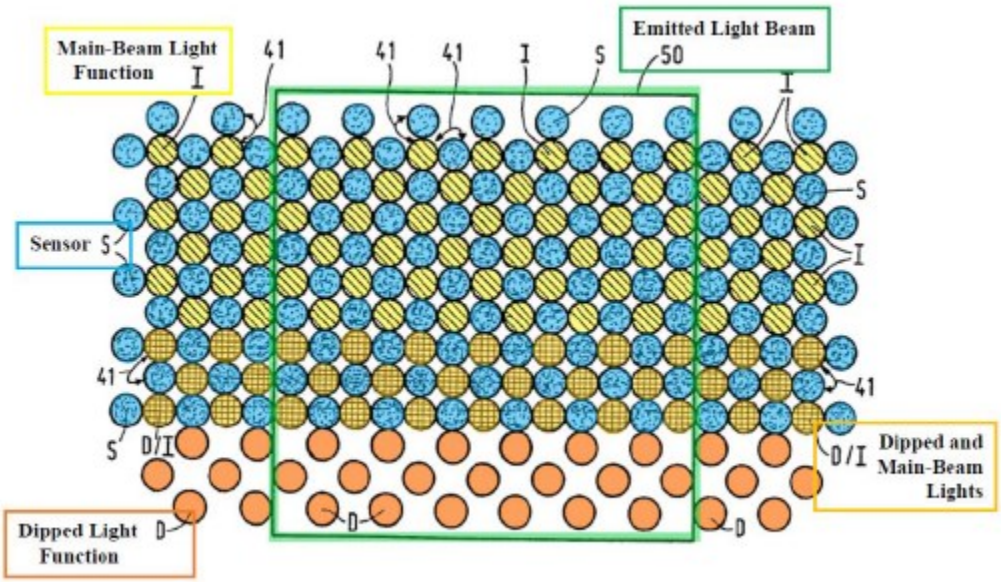

(Ex. 1010, Fig. 14) (Petition at 14, 68, 69, 73, 74, 75 Annotated by Petitioner.)

163. The Karlsson-Nakamura combination does not teach "*one or more cameras*" as required by claims 24, 32, 40, and 48.

164. Intentionally left blank.

b. Claims: 24/32/40/48 – The Karlsson-Nakamura Combination Does Not Teach "*one or more sensors, including one or more <u>cameras</u> . . . <u>for detecting coordinate-specific information</u> about the illuminated area.*"

165. Petitioner again relies on Karlsson's disclosure at 12:19-22 that the sensors 9 and 23 are "capable of precisely determining the direction and the intensity of the detected light 11" for satisfying this limitation. (Petition at 63.) Petitioner admits "Karlsson does not expressly disclose how the direction of the

target light sources is stored and processed to determine which LEDs to be dimmed to avoid glare." (Petition at 55.)

166. Petitioner further states that:

> A POSA would have therefore understood that images received by the camera, and the direction data associated with them, are "coordinate-specific information about the illuminated area" as claimed because the direction is stored in a format (as coordinates).

(Petition at 63.)

167. Karlsson does not disclose storing the direction of the detected light 11 in a format as coordinates. On the contrary, with reference to Figure 14, Karlsson discloses an arrangement in which each sensor (S) of an array of spotlight sensors is electrically connected to an adjacent spotlight source to provide a switch to control the LEDs:

> The spotlight sources and the spotlight sensors, … may also be formed by LEDs and photosensitive transistors, respectively. <u>Arrow 41 schematically indicates an electric connection between the spotlight sensors and spotlight sources</u> D, I and D/I, which, for example, may consist of transistors or the like… Integration of LEDs and phototransistors on one carrier, for example, is also possible.

(Ex. 1010, 19:34-20:5.)

168. With reference to the Figure 14 embodiment, Karlsson does not disclose a controller or storage means connected between the sensors (S) and the

sources to store any coordinates, as proposed by the Petitioner. Instead, if each sensor is functioning as a switch for the adjacent LED(s) to which it is electrically connected, then light detected by the sensor would cause a change to the electrical current to the LED and cause it to change state.

169. The Karlsson-Nakamura combination does not teach "*one or more cameras . . . for detecting coordinate-specific information about the illuminated area*" as claimed.

170. Intentionally left blank.

c. Claims: 24/32/40/48 - The Karlsson-Nakamura Combination Does Not Teach "*a plurality of individually controllable LEDs*" and "*one or more sensors, including one or more cameras*."

171. Without explaining why a POSA would interchange two different embodiments, Petitioner relies on Karlsson's LED embodiment at 11:29-32, 13:24-29 for satisfying the "*plurality of individually controllable LEDs*" limitation, and Karlsson's light modulator embodiment at 12:22-24 for satisfying the "*one or more cameras*" limitation. (Petition at 60, 62.)

172. Karlsson discloses "a lighting device comprising a plurality of controllable spotlight beams." (Ex. 1010, 13:24-25.) Like Beam, Karlsson teaches that the controllable spotlight beams may be provided by two disparate, alternative embodiments, 1) controllable LEDs, **or** 2) a single light source combined with a

controllable light modulator. (Id. at 14:1-9.) Karlsson consistently presents the two embodiments as alternatives: for "intermittently controlling the light intensity delivered by the lighting means, as discussed above, the light source **or** the light modulator means may be repeatedly controlled, for example in a pulsed manner, in a r[h]ythm not visible for the human eye, typically in the order of 100 Hz or higher." (*Id*. at 12:25-29.)

173. The alternative embodiments notably rely on different sensors: a "matrix of photo diodes **or** in the case of a light-sensitive sensor 23, a photo-sensitive plate as used in modern video cameras." (Ex. 1010, 12:22-24.) Only the light modulator embodiment includes a camera. Karlsson illustrates the light-sensitive sensor 23 adjacent to the light modulator 3 in Figures 3, 5a, 7, 10.

174. As I explained in paragraph 35 of the state of the art section, a POSA would have understood that a light modulator is not needed with an array of LEDs because the LEDs themselves can be controlled or modulated and therefore a light modulator is redundant, and further unsuitable with an LED array as it decreases optical efficiency and adds expense and packaging challenges. (*See also* Ex. 1010, 12:25-29.) For example, comparably, Beam discloses an embodiment in which a conventional "lamp 202 and spatial light modulator 203 are replaced by an array of light sources 401" (Ex. 1005, 5:3-6.) A POSA would thus not interchange the teachings of the LED array and light modulator embodiments. Accordingly, the

Karlsson-Nakamura combination does not teach "*a plurality of individually controllable LEDs*" and "*one or more cameras*" as claimed.

175. Intentionally left blank.

d. Claim 40 –The Karlsson-Nakamura Combination does not teach a controller enabled to "*determine a second, different cluster of the LEDs illuminating at least a second portion of a second other vehicle*."

176. Independent claim 40 requires a controller enabled to: "*determine a second, different cluster of the LEDs illuminating at least a second portion of a second other vehicle based at least in part on the data indicating a second position associated with the second other vehicle*." Petitioner cites to its analysis in Sections VIII.D and VIII.I.1-2 for satisfying this limitation. (Petition at 76.)

177. Karlsson discloses protecting "traffic" from glare. (Ex. 1010, 9:18-26.) Petitioner concludes that "[w]hen there are two or more separated vehicle targets, Karlsson's system would select two areas of non-contiguous LEDs to form the dimmed cluster of LEDs to cover all of the vehicle targets." (Petition at 70.) Karlsson never teaches this – nor is it inherently how Karlsson would function. For example, Karlsson could alternatively form a large dark box encompassing all detected lights. Petitioner is essentially applying the claims and/or teachings of Beam to Karlsson without any justification for having done so.

178. Intentionally left blank.

2. Dependent Claims

a. Claims 25/33/41/49 – The Karlsson-Nakamura Combination does not teach "select[ing] a cluster of the LEDs that emit light toward at least a portion of the other vehicle" where "the cluster includes a plurality of the LEDs and the cluster includes non-contiguous LEDs."

179. Claim 25 depends from claim 24 and is representative of claims 33, 41, and 49. Claim 24 requires a controller that is enabled to "*select a cluster of the LEDs that emit light toward at least a portion of the other vehicle.*" Claim 25 further requires that the "*the cluster includes a plurality of the LEDs and the cluster includes non-contiguous LEDs.*"

180. Petitioner relies on Karlsson's disclosure regarding forming random patterns of the light beam; and/or obviousness in view of Karlsson or Nakamura's disclosure regarding not exposing traffic or other vehicles to glare for satisfying these limitations. (Petition at 70-71.)

181. Karlsson discloses "a lighting device comprising a plurality of controllable spotlight beams is used advantageously for forming random patterns of the light beam to be emitted in an effective manner." (Ex. 1010, 13:24-27.) It is unclear what Karlsson teaches regarding these "random patterns", however a POSA that is concerned with safety would not have been motivated to design a headlamp that forms random light patterns.

182. Karlsson and Nakamura do not teach how to deal with multiple vehicles other than a presumption that Karlsson can deal with them somehow and Nakamura will deal with them by lowering the field of light to the rear of the nearest vehicle. Even if such a teaching were present, however, Petitioner's argument is not directed to the single cluster for the single vehicle including non-contiguous lights as claimed.

183. The '551 Patent discloses benefits associated with selecting a cluster of non-contiguous LEDs for illuminating a single "other vehicle." For example, controlling LEDs to adjust light color in response to detecting another vehicle. (Ex. 1001, 53:37-39.) The Karlsson-Nakamura combination does not teach "*select[ing] a cluster of the LEDs that emit light toward at least a portion of the other vehicle*" where "*the cluster includes a plurality of the LEDs and the cluster includes non-contiguous LEDs*," as claimed, and claims 25/33/41/49 are non-obvious over the combination.

184. Intentionally left blank.

3. A Person of Ordinary Skill in the Art Would Not Have Been Motivated to Combine Karlsson and Nakamura

a. A POSA Would Not have been Motivated to Combine Karlson's Disparate LED Array and Light Modulator Embodiments

185. Petitioner's proposed combination of Karlsson and Nakamura

combines features from Karlsson's alternative embodiments -- Karlsson's LED array with the light-sensitive sensor 23, which may include "a photo-sensitive plate as used in modern video cameras," from the light modulator embodiment. (Petition at 60, 62, 68, 69, 73, 74, 75.)

186. Karlsson further discloses "a lighting device comprising a plurality of controllable spotlight beams." (Ex. 1010, 13:24-25.) Like Beam, Karlsson discloses that the controllable spotlight beams may be provided by controllable LEDs, or a single light source combined with a controllable light modulator. (Id. at 14:1-9.) Karlsson further discloses that for "intermittently controlling the light intensity delivered by the lighting means, as discussed above, the light source **or** the light modulator means may be repeatedly controlled, for example in a pulsed manner, in a r[h]ythm not visible for the human eye, typically in the order of 100 Hz or higher." (*Id*., 12:25-29.)

187. Karlsson discloses that the light-sensitive sensor 23 is used in conjunction with the light modulator 3. (Ex. 1010, Figs. 3, 5a, 7, 10.) A POSA would have understood that a light modulator is not needed with an array of LEDs because the LEDs themselves can be controlled or modulated and therefore a light modulator is redundant and inefficient. (*See also* Ex. 1010, 12:25-29.) For example, Beam discloses an embodiment in which a conventional "lamp 202 and spatial light modulator 203 are replaced by an array of light sources 401" (Ex.

1005, 5:3-6.)

188. As I explained in paragraph 35 of the state of the art section, a POSA would not have been motivated to combine Karlsson's unsuitable components to provide redundant modulation and reduced optical efficiency.

189. Intentionally left blank.

b. Petitioner Does Not Explain How a POSA Would Have Combined Karlsson's Internal Sensors with Nakamura's Remote Sensor Based Image Processing

190. Petitioner states that "it would have been obvious to a POSA to modify Karlsson's system to map the image with coordinates, as taught by Nakamura, to provide the algorithmic detail implicit in Karlsson." (Petition at 63.) "Thus, Karlsson's camera would produce the claimed 'coordinate-specific information' as modified by Nakamura." (*Id.*) Petitioner fails to explain how light sensed by Karlsson's <u>lamp-located</u> sensor would be used by Nakamura's vehicle recognition zone image processing strategy that is based on a remote camera located at the top center of the windshield and that expressly defines subsequent processing from the visual perspective of its mounting location.

191. Karlsson discloses sensors disposed in a headlight. The system includes "a light-sensitive sensor 9 and a further lens 10 disposed on the side of sensor 9 that is exposed to the incident light, such that incident light 11 on the lens

10 is formed into an incident light beam 12 on light-sensitive sensor 9." (Ex. 1010, 8:19-23.)

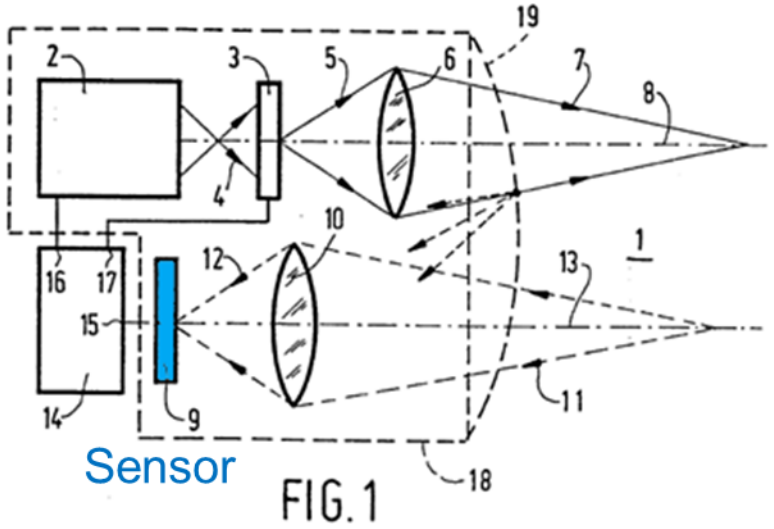

(Ex. 1010, Fig. 1, Annotated)

192. Karlsson further discloses that the "sensor means and the lighting means according to the present invention can be advantageously combined into a single integrated lighting device, whereby the field of view of the light-sensitive sensors and the illumination field of the light beam to be emitted, will coincide." (Ex. 1010, 3:27-31.) Karlsson, like Beam, discourages mounting sensers remote from the headlights, e.g., on a "windscreen [*sic* windshield]," – "the separate mounting of the headlights and the sensors is **not to be preferred**, because this requires additional assembly time, additional wiring, additional alignment operations and the like, which significantly adds to the cost of production, in particular in the case of mass production, for example in the automotive industry."

(*Id*., 2:10-18.)

193. Nakamura discloses headlamps 18 and 20 that are provided on the top part of the front bumper 16, and a camera 22 that is mounted "[a]t the top of this windshield glass 14 and inside of vehicle 10 (at the driver's visual field position, or in other words, near the driver's eyepoint)." (Ex. 1013, [0012][11].)

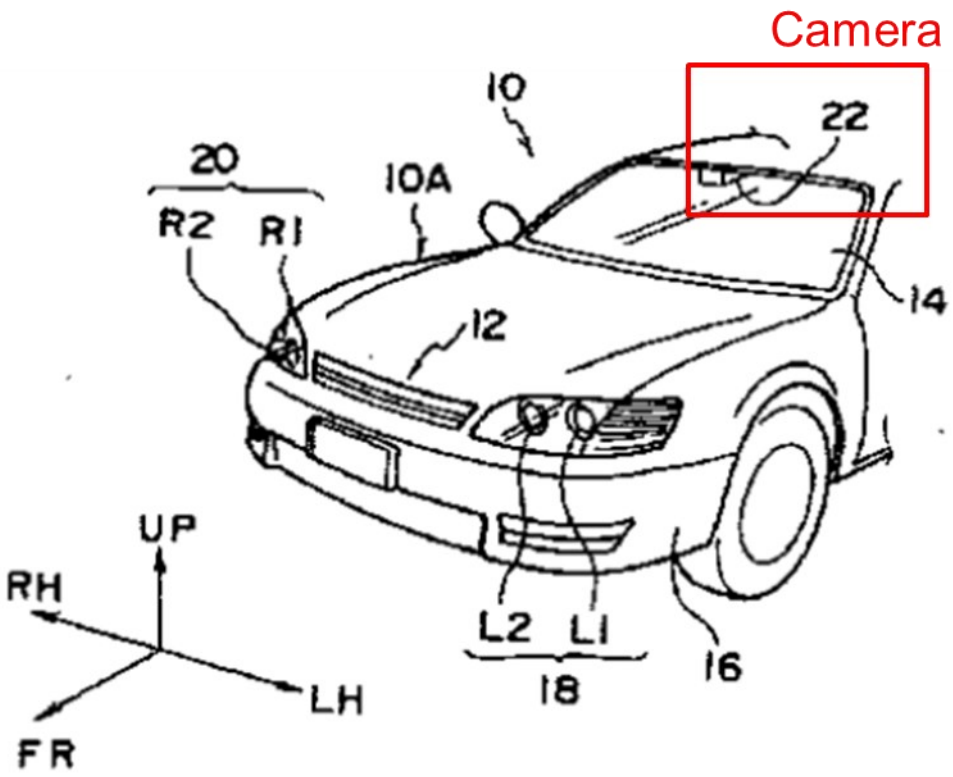

(Ex. 1013, Fig. 1, Annotated)

194. Nakamura, like Satonaka, mounts a camera at the center of the windshield near the driver's eyeline. (Ex. 1014, [0016].) From this perspective, the

[11] Nakamura and Satonaka have substantially similar disclosures.

camera generally sees the road as the driver does, with preceding traffic centered between lane markers, and lane markers largely visible on either side of a vehicle. (*Id*., Fig. 4, 1.) If the viewpoint were shifted, for example, to a front left or right headlamp, the accuracy of the algorithm would be reduced.

195. First, as illustrated in the figures below, the perspective of the vehicle would shift vertically downward and horizontally due to the lower offset mounting location, which would skew the lane markings and corresponding area of analysis for detecting a vehicle by the algorithm. Further, for a left headlamp, the left-side marker would appear more vertical and the right-side marker would skew left. Similarly, for a right headlamp, the right-side marker would appear more vertical and the left-side marker would skew right. As shown in the photos, this may result in a vehicle being outside of the analysis area making the proffered combination unsuitable.

Lower Left Camera

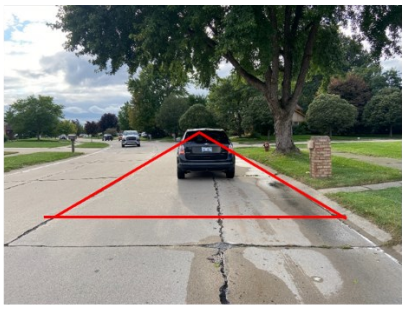

Top Center Camera

Lower Right Camera

196. Further, Petitioner does not explain if the Beam-Satonaka combination uses a camera in the front left headlamp, the front right headlamp, or

both. If the Beam-Satonaka combination uses a camera that is located in the front left headlamp, then the system would have the same limited functionality regarding detecting a preceding vehicle as a camera located in the front right headlamp, as illustrated in the figures above. If the combination uses both cameras, Petitioner does not explain whether or how the information collected from both cameras is combined. Regardless, a camera located in either location has limited functionality regarding detecting a preceding vehicle.

197. Petitioner also fails to explain how the coordinates of Nakamura would be mapped to the LEDs of Karlsson. Karlson discloses a system largely focused on improvements to a prior art system for adaptive control, without much detail, if any, on how such control is implemented, choosing instead to primarily discuss alternative light and sensor sources and assembly strategies. (Ex. 1010, 1:8-9, 2:2-9.) In fact, Karlsson's lack of an actual description of control was cited by Petitioner as a reason to modify Karlsson – "Karlsson does not expressly disclose how the direction of the target light sources is stored and processed to determine which LEDs to be dimmed to avoid glare." (Petition at 55.)

198. Petitioner does not provide an evidence-supported account of how the combination of Karlsson and Nakamura's Software Implementation would work, *i.e.*, how signals from Karlsson's <u>lamp-located</u> sensor would be used by Nakamura's vehicle recognition zone image processing strategy—a processing

strategy that is based on a remote camera being located at the top center of the windshield and viewing and processing the scene from that perspective.

199. Furthermore, while Petitioner relies on "coordinate storage" in Nakamura, coordinate storage does not cure Karlsson's deficiency, as defined by Petitioner, of how to "determine which portions of the headlight beam need to be dimmed" *i.e.* "to determine which LEDs to be dimmed to avoid glare." (Petition at 55.) Reliance on Nakamura is misplaced as Nakamura does not contemplate LEDs and therefore does not control light in a similar fashion. Petitioner seems to be simultaneously taking contradictory positions that Karlsson's deficiency would lead a POSA to look to Nakamura, but then recognizes that Nakamura's coordinate information also does not identify portions of a headlight beam to dim, so Petitioner looks back to Karlsson to satisfy the deficiency that was the basis for looking to Nakamura in the first instance.

200. Petitioner's motivation to combine also incorrectly assumes that Karlsson captures images ("like the images recorded in Karlsson,") leaping from "sensors 9 and 23 are preferably designed to be capable of precisely determining the direction and the intensity of detected light" to "thus Karlsson discloses receiving an image…" (Petition at 55.) To the contrary, Karlsson never mentions storing or processing an image requiring Nakamura's coordinate information, and Petitioner's summary of Karlsson even notes that "Karlsson automatically varies

the LED pattern in response to control signals from light-sensitive sensors." (Petition at 13.) Multiple embodiments of Karlsson disclose physical mappings between the spotlight sensors detecting light and the spotlight beams to be dimmed such that Nakamura's coordinate information would be unsuitable for use in Karlsson's system. Thus, Petitioner's explanation lacks even a credible premise in assuming that there is an image in Karlsson to modify in the first place, or any explanation of how a determination of direction and intensity of light amounts to "receiving an image" that could utilize Nakamura's coordinates.

201. Intentionally left blank.

D. Ground 4 - Karlsson, Nakamura, and Gotou

1. Claims: 26-29, 34-37, 42-45, 50-53 – The Karlsson-Nakamura-Gotou Combination Does Not Teach a controller enabled to "*accommodate the upcoming road curvature by adaptation of a light pattern*."

202. Claim 26 depends from claim 24 and is representative of claims 27-29, 34-37, 42-45, and 50-53. Claim 26 requires a controller enabled to "*accommodate the upcoming road curvature by adaptation of a light pattern of at least one of the at least one headlamps*." Petitioner relies on Gotou for teaching this limitation, and states that "Karlsson's modified system would incorporate map data from Gotou's navigation system 30 into control means 14, and control the LEDs accordingly." (Petition at 81-82.)

203. Karlsson discloses a headlight assembly having a controllable lighting pattern, that provides a high-beam or "main-beam" lighting pattern as a default setting. (Ex. 1010, 1:1-7, 1:18-23.) Karlsson further discloses reducing the high beam to a partial beam, (e.g., as depicted by a window 50 in Figure 14) under limited circumstances, in this case to avoid blinding oncoming drivers. For example, Karlsson discloses "retaining an optimum light for the driver of the vehicle" while automatically suppressing "that part of the light beam which might cause inconvenience to oncoming traffic." (Ex. 1010, 2:7-9.) Karlsson also notes that "main-beams are designed and optimized for long-range illumination" (Ex. 1010, 1:19-20.) Karlsson seeks the **retention** of "optimum" light anywhere glare is not being accommodated. (Ex. 1010, 2:7-10, 9:23-26.)

204. Karlsson discloses that the "light beam 7 … [is] controlled in such a manner that **no light at all or light having a low intensity** is emitted in those directions from which light is detected … [thus] **glaring or blinding of oncoming traffic is effectively prevented.**" (Ex. 1010, 9:18-26.) Petitioner admits that this disclosure teaches that the "<u>remaining areas of light beam 7 are left at full intensity</u> ('main-beam' or 'high beam' in Karlsson's terms), 'permitting a light intensity which is generally higher than that of conventional dipped headlights.') (Petition at 72.) Petitioner continues the explanation and interpretation of Karlsson by admitting that:

> A POSA would also have understood that positioning the main beam **(full intensity)** LEDs all around the **reduced illumination area** provides the **"optimum lighting effect"** for the driver because doing so maximizes the area that is fully illuminated. EX1003, ¶284; EX1010, 2:7-9. In the alternative, it would have been obvious to a POSA to configure Karlsson's system to **surround** the reduced illumination area with **full illumination to the greatest extent possible** for the same reason, which would result in the claimed light distribution. EX1003, ¶¶285-286.

(Petition at 73-74.)

205. "The greatest extent possible" that "surround[s]" a reduced illumination area, is, of course, use of the full LED array, to provide the driving beam 7. As Petitioner explains, this also "maximizes the area that is fully illuminated" to achieve "optimum lighting effect for the driver." (*Id.*) Per Karlsson and Petitioner's admissions, the only reasoned and consistent interpretation is that Karlsson uses full illumination "to the **greatest extent possible**" to achieve an "optimum lighting effect" by "maximizing the area that is fully illuminated"— i.e., it uses the **entire array** just as Beam does, except for portions dimmed to avoid glare under Karlsson's specified circumstances.

206. With reference to Figure 14, Karlsson states: "In this embodiment non-shaded spotlight sources indicated at D provide the dipped light function in accordance with existing vehicle headlights, whilst the single-shaded spotlight

sources indicated at I provide the main-beam light function of existing vehicle headlights." (Ex. 1010, 19:22-28.) As illustrated in Figure 14 below, the dipped light sources (D) and main-beam light sources (I) extend beyond window 50. Because the D and I "sources," collectively, provide "existing vehicle" light beams, it follows that window 50 is created by blanking a subset of the overall beam "if desired," i.e., to reduce potential glare. (Ex. 1010, 19:31-33.)

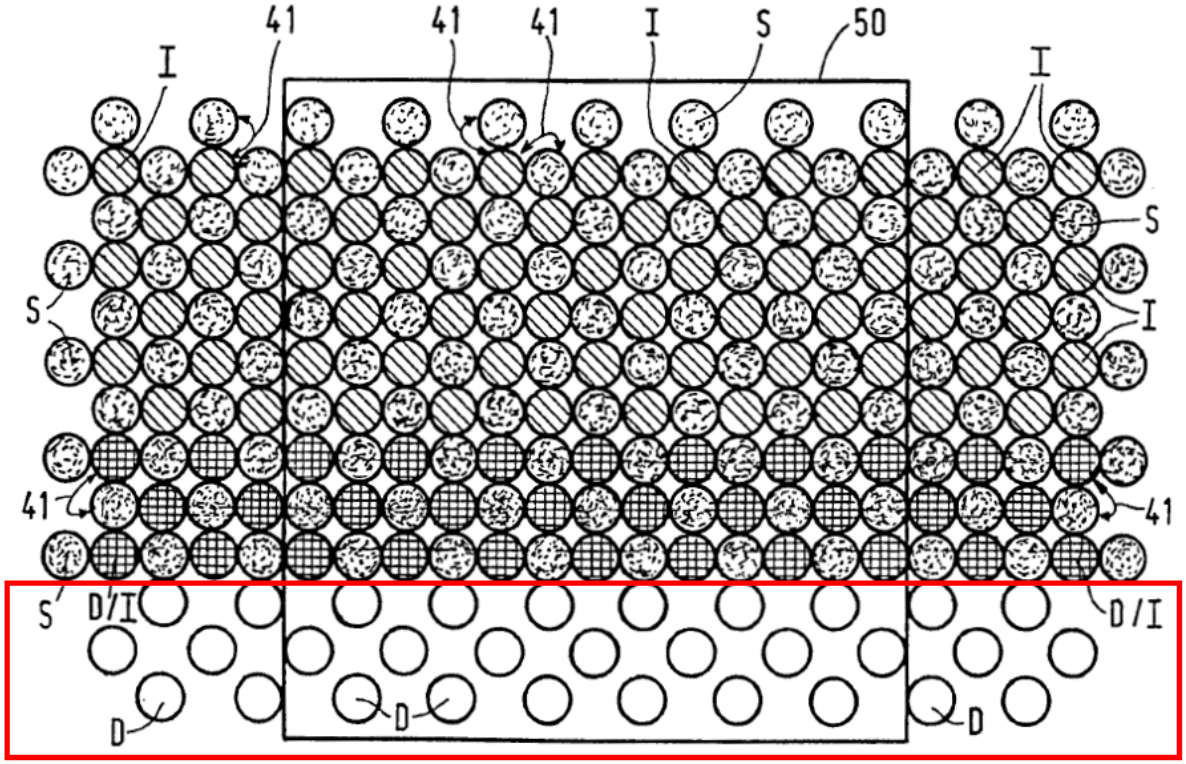

FIG. 14

(Ex. 1010, Fig. 14 Annotated)

207. This interpretation corresponds with Figure 16's description of sensors, used to prevent glare based on vehicle movement in situations, such as a curve, where another vehicle's lights may be difficult to detect due to relative

positioning. If Karlsson's vehicle is pitched, e.g., during sharp velocity changes or "overloaded," the light beam 7 is adapted for pitch — i.e. certain LEDs are blanked causing the window 50 to vertically shift as described with reference to Fig. 14. (Ex. 1010, 20:25-29.) If the vehicle is taking a curve, the light beam 7 is adapted to prevent glaring the opposite lane – i.e., certain LEDs are blanked causing the window 50 to horizontally shift as described with reference to Fig. 14. (Ex. 1010, 20:29-33.)

208. Under any of these situations, the resulting beam would be less (for the duration of the event) than the full normal beam of an incandescent lamp (being diminished in some regard, vertically or horizontally), except that Karlsson makes these glare-reduction adaptations to allow the main (high) driving beam to continue to operate everywhere else to maintain "optimum illumination" of the road ahead of the driver.

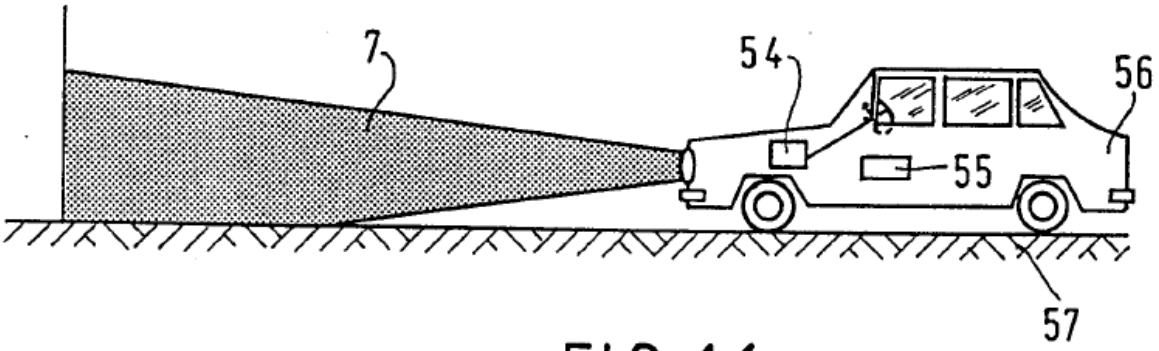

FIG. 16

(Ex. 1010, FIG. 16)

209. The reduced illumination provided by window 50 also corresponds with Karlsson's desire to "retain an optimum lighting effect," per Flaaten — the base device, which Karlsson seeks to improve. (Ex. 2017.) Karlsson explains that the Flaaten "prior art lighting device" "retain[s] an **optimum lighting** effect for the driver of the vehicle," by enabling "such control of the light that **only the portion of the light** that would inconvenience the driver of meeting cars **is removed**, **leaving as much as possible of the roadway and the surroundings illuminated**." (Ex. 1010 at 1-2; Ex. 2017 at 1.)

210. Finally, there is nothing in Karlsson to suggest that window 50 is the actual beam that would be used for driving. On the contrary, as contemporaneous publications from Petitioner's expert establish, given the state of the art and the numerous technical challenges with incorporating extra LEDs to the headlamp system, all LEDs in the Karlsson array would be used to achieve sufficient lumen output for driving.

211. As both parties agree, Karlsson discloses providing full or maximum intensity light in the remaining areas outside of the anti-glare region to the greatest extent possible, i.e., everywhere it could be needed. Under such circumstances, there would be no reason to adapt the light pattern to accommodate road curvature, nor would there be remaining unlit LEDs with which to achieve the adaptation. Accordingly, the Gotou-Karlsson combination does not teach a controller enabled

to "*accommodate the upcoming road curvature by adaptation of a light pattern of at least one of the at least one headlamps*," as claimed.

2. Claims: 27/35/43/51 – The Karlsson-Nakamura-Gotou Combination Does Not Teach the "*Non-Contiguous LEDs*" Limitation

212. Claims 27, 35, 43, and 51 each require "*non-contiguous LEDs*." Petitioner references its analysis of claim 25 for satisfying this limitation. (Petition at 82.) The Beam-Satonaka-Kobayashi Combination does not teach the "*non-contiguous LEDs*" limitation for at least the same reasons given for claim 25. See paragraphs 179-183.

3. Claim 29: Petitioner Fails to Address the "*Sensor Data*" Limitation

213. Claim 28 depends from claim 26 and requires "*wherein the adaptation of the light pattern is based at least in part on the map data*." Claim 29 depends from claim 26 and requires "*wherein the adaptation of the light pattern is based at least in part on the sensor data*." Petitioner relies on Gotou's disclosure regarding its navigation system for satisfying the limitations of both claims. (Petition at 83-84.) Regarding claim 29, Petitioner states that "modified Karlsson would include various sensors and map data as part of its inputs to predict the upcoming road curvatures." (Petition at 84.) Claim 29 requires "*sensor data*", not "*map data*." (Ex. 1002, 993.) However, claim 29 in the appendix does not include the actual "*sensor*

data" limitations of claim 29, and Petitioner fails to analyze the actual limitations of claim 29.

214. Intentionally left blank.

X. Secondary Considerations

215. During the reexamination of the '551 Patent, Patent Owner detailed the long-felt need and industry praise for the glare-free adaptive beam technology claimed in the 551 Patent. (Ex. 1002, 67-83.) Patent Owner correlated each limitation of claim 24 with specific statements of industry praise through the Stam declaration, providing an explanation of the nexus between the two. (Ex. 1002, 70-77, 549-555.) I have reviewed the objective evidence statements in the Stam declaration and concur with the analysis. Below I reference specific sections of the Stam Declaration.

216. As set forth in the Stam Declaration regarding long-felt unmet need, automotive companies and the industry at large have long recognized the two-fold need for 1) increased visibility at night and 2) avoiding the discomfort of glaring headlamps. (Ex. 2023 at 734.) Since 2017, Petitioner individually and through the Alliance for Automotive Innovation, of which Petitioner is a member, petitioned NHTSA for a change in regulations to allow adaptive driving beam (ADB) technology. As the Stam Declaration establishes, ADB technology as used in the Alliance filings and defined in the NHTSA proposed rule changes, falls within the

scope of the claims. (Ex. 2023 at 738, 739.) Per NHTSA, ADB technology uses advanced sensors and computing technology that more accurately and precisely detect the presence and location of other vehicles and shape the headlamps beams to provide enhanced illumination of unoccupied portions of the road and avoid glaring other vehicles. (*Id*.) The Stam Declaration provides several quotes from various industry and government groups, such as AAA, the Institute of Highway Safety (IIHS) and NHTSA to show the persistent need that existed for well over a decade for the claimed ADB technology.

217. On the issue of nexus, it is my understanding that if the Patent Owner does not produce a product, the Patent Owner can still prove nexus by showing that the evidence of secondary considerations is the direct result of the unique characteristics of the claimed invention. As explained in paragraphs 39-45 above, the ’551 Patent claims include multiple unique characteristics such as “Predictive Curve Illumination” the subject of claims 26-29, 34-37, 42-45 and 50-53, “*adapting light emission based on the classification of objects*”, the subject of claim 48, and adapting light emission to provide at least two dark zones with “*light in-between*,” the subject of claim 40. Objective evidence in the form of industry praise were correlated with all three claimed characteristics in the Stam Declaration. (Ex. 2023 at 70-77, 728-734.)

218. Regarding industry praise, the Stam Declaration identifies a 2014

Automotive News PACE Award for adaptive LED Matrix Beam technology—correlating the praised features of that technology to the claimed invention, specifically an "automatically adjusts a car's headlamps to deliver 'glare free' illumination, dimming or switching on and off light sources based on traffic conditions" with 1) "[i]ndividually controlled LEDs [that] also provide two or more dark zones with 'light in-between,' allowing continuous use of a vehicle's high-beams to maximize visibility and provide a safer driving experience" and 2) "intelligent lighting" technology to recognize cars that are being followed as well as oncoming traffic." (Ex. 2023 at 729-734.) Regarding the claimed Predictive Curve Illumination feature, Driving Vision News states: "The benefit of a glare-free function is not only to shadow out other cars but also to provide visibility for upcoming curves and dangerous situations; there is a clear safety gain by illuminating this curve in front of the driver." (Ex. 2023 at 727.)

XI. Conclusion

219. In my opinion, the prior art references discussed above taken alone or in any permissible combination do not disclose or suggest each and every element of the challenged claims.

220. I reserve the right to supplement my opinions to address any information obtained, or positions taken, based on any new information that comes to light throughout this proceeding.

I declare under penalty of perjury that the foregoing is true and accurate to the best of my ability.

Executed on: 9/13/2023

Matthew A. Turk PhD