UNITED STATES PATENT AND TRADEMARK OFFICE

BEFORE THE PATENT TRIAL AND APPEAL BOARD

VOLKSWAGEN GROUP OF AMERICA, INC. AND
PORSCHE CARS NORTH AMERICA, INC.,
Petitioners,

v.

YECHEZKAL EVAN SPERO
Patent Owner.

U.S. Patent No. 10,894,503 B2

Case IPR2023-00328

PATENT OWNER'S NOTICE OF APPEAL TO THE U.S. COURT OF APPEALS FOR THE FEDERAL CIRCUIT

Notice is hereby given, pursuant to 35 U.S.C. §§ 141, 142, 319 and 37 C.F.R. §§ 90.2(a), 90.3(a)(1), that Patent Owner Yechezkal Evan Spero ("Patent Owner") hereby appeals to the United States Court of Appeals for the Federal Circuit from the Final Written Decision of the Patent Trial and Appeal Board ("PTAB") entered on July 15, 2024 (Paper 42) in Case No. IPR2023-00328 regarding U.S. Patent No. 10,894,503 (the "'503 Patent"), attached as Exhibit A; and the Order denying Director Review of the Final Written Decision dated August 28, 2024 (Paper 44), attached as Exhibit B; and from all underlying findings, determinations, orders, decisions, rulings and opinions that are adverse to Patent Owner, including, without limitation, those within the Decision on Institution of *Inter Partes* Review, entered July 17, 2023 (Paper 12). This notice is being timely filed within 63 days of the issuance of the denial of the Request for Director Review.

In accordance with 37 C.F.R. § 90.2(a)(3)(ii) and Federal Rule of Appellate Procedure 15(a)(2)(C), without waiving and expressly reserving the right to raise other issues, the expected issues on appeal include, but are not limited to:

1. Whether the PTAB erred in failing to determine whether claims 26-27 and 30-31 of the '503 Patent are unpatentable as obvious under 35 U.S.C. § 103 in view of U.S. Patent Number 6,144,158 ("Beam") and U.S. Publication No. 2001/00198486 ("Thominet").

2. Whether the PTAB erred in failing to determine whether claim 65 of the ’503 Patent is unpatentable as obvious under 35 U.S.C. § 103 in view of U.S. Patent Number 6,144,158 (“Beam”), U.S. Publication No. 2001/00198486 (“Thominet”), and WIPO Patent Publication No. 2001/070538 (“Stam”).

3. Whether the PTAB erred in failing to determine whether claims 32-36 of the ’503 Patent are unpatentable as obvious under 35 U.S.C. § 103 in view of U.S. Patent Number 6,144,158 (“Beam”), U.S. Publication No. 2001/00198486 (“Thominet”), and U.S. Patent Number 6,049,749 (“Kobayashi”).

4. Whether the PTAB erred in failing to determine whether claim 70 of the ’503 Patent is unpatentable as obvious under 35 U.S.C. § 103 in view of U.S. Patent Number 6,144,158 (“Beam”), U.S. Publication No. 2001/00198486 (“Thominet”), WIPO Patent Publication No. 2001/070538 (“Stam”), and U.S. Patent Number 6,049,749 (“Kobayashi”).

5. Whether the PTAB erred in failing to determine whether claims 66-67 of the ’503 Patent are unpatentable as obvious under 35 U.S.C. § 103

in view of U.S. Patent Number 6,144,158 ("Beam"), U.S. Publication No. 2001/00198486 ("Thominet"), WIPO Patent Publication No. 2001/070538 ("Stam"), and WIPO Patent Publication No. 2002/ 04247 ("Braun").

6. Whether the PTAB erred in failing to determine whether claim 28 of the '503 Patent is unpatentable as obvious under 35 U.S.C. § 103 in view of U.S. Patent Number 6,144,158 ("Beam"), U.S. Publication No. 2001/00198486 ("Thominet"), and WIPO Patent Publication No. 2001/01038 ("Harbers").

7. Whether the PTAB erred in failing to determine whether claim 68 of the '503 Patent is unpatentable as obvious under 35 U.S.C. § 103 in view of U.S. Patent Number 6,144,158 ("Beam"), U.S. Publication No. 2001/00198486 ("Thominet"), WIPO Patent Publication No. 2001/070538 ("Stam"), and WIPO Patent Publication No. 2001/01038 ("Harbers").

8. Whether the PTAB erred in finding that Petitioner has shown by a preponderance of the evidence that claims 26-28, 30-31, 65, and 68 of the '503 Patent are unpatentable as obvious under 35 U.S.C. § 103 in

view of WIPO Patent Publication No. 1998/54030 ("Karlsson") and WIPO Patent Publication No. 2001/01038 ("Harbers").

9. Whether the PTAB erred in finding that Petitioner has shown by a preponderance of the evidence that claims 32-36 and 70 of the '503 Patent are unpatentable as obvious under 35 U.S.C. § 103 in view of WIPO Patent Publication No. 1998/54030 ("Karlsson"), WIPO Patent Publication No. 2001/01038 ("Harbers"), and U.S. Patent Number 5,588,733 ("Gotou").

10. Whether the PTAB erred in finding that Petitioner has shown by a preponderance of the evidence that claims 66-67 are unpatentable as obvious under 35 U.S.C. § 103 in view of WIPO Patent Publication No. 1998/54030 ("Karlsson"), WIPO Patent Publication No. 2001/01038 ("Harbers"), and WIPO Patent Publication No. 2002/ 04247 ("Braun").

11. Whether the PTAB erred on all other issues decided adversely to Patent Owner in any findings, determinations, orders, decisions, rulings or opinions underlying or supporting the Final Written Decision and the Request for Director Review.

Pursuant to 37 C.F.R. § 90.2(a)(1) and (a)(2), as well as Fed. Cir. R. 15(a)(1),

and as reflected in the attached Certificate of Service and Filing, this Notice of Appeal is simultaneously being filed with the Director of the United States Patent and Trademark Office, the PTAB, and the Clerk's Office for the United States Court of Appeals for the Federal Circuit, along with the requisite docketing fee.

Respectfully submitted,

Dated: October 30, 2024

/ Sangeeta G. Shah /

Sangeeta G. Shah (Reg. No. 38,614)
Andrew B. Turner (Reg. No. 63,121)
David S. Bir (Reg. No. 38,383)
Bernard Tomsa (Reg. No. 60,121)
Brooks Kushman P.C.
150 W. Second St.
Suite 400N
Royal Oak, MI 48067
(248) 358-4400

Attorneys for Patent Owner

CERTIFICATE OF FILING AND SERVICE

The undersigned hereby certifies that on October 30, 2024 a copy of **PATENT OWNER'S NOTICE OF APPEAL** was served by United States Postal Service Priority Express mail to counsel of record as follows:

Michael D. Specht (Reg. No. 54,463) Sterne, Kessler, Goldstein & Fox P.L.L.C. 1101 K Street, N.W., 10th Floor Washington D.C., 20005 Telephone: (202) 371-2600 Facsimile: (202) 371-2540 mspecht-PTAB@sternekessler.com Counsel for Volkswagen Group of America., Inc.	Jason A. Fitzsimmons (Reg. No. 65,367) Daniel E. Yonan (Reg. No. 53,812) Ian Soule (Reg. No. 74,290) John D. Higgins (Reg. No. 74,992) Sterne, Kessler, Goldstein & Fox P.L.L.C. 1101 K Street, N.W., 10th Floor Washington D.C., 20005 Telephone: (202) 371-2600 Facsimile: (202) 371-2540 jfitzsimmons-PTAB@sternekessler.com dyonan-PTAB@sternekessler.com isoule-PTAB@sternekessler.com jhiggins-PTAB@sternekessler.com PTAB@sternekessler.com . Counsel for Volkswagen Group of America., Inc. Edgar H. Haug (Reg. No. 29,309) Robert E. Colletti (Reg. No. 76,417) Haug Partners LLP 745 Fifth Avenue New York, NY 10151 Telephone: (212) 588-0800 Facsimile: (212) 588-0500 ehaug@haugpartners.com; rcolletti@haugpartners.com; PTAB-Porsche@haugpartners.com Counsel for Porsche Cars North America, Inc.

In addition, I certify that **PATENT OWNER'S NOTICE OF APPEAL** is being filed on **October 30, 2024** as follows:

- by electronic mail with the Director of the United States Patent and Trademark Office c/o Office of the Solicitor to efileSO@uspto.gov, pursuant to 37 C.F.R. § 90.2(a)(1)(i);
- electronically with the PTAB through the P-TACTS system, pursuant to 37 C.F.R. § 90.2(a)(1)(ii); and
- electronically with the United States Court of Appeals for the Federal Circuit via the CM/ECF system, pursuant to Fed. R. App. Proc. 25(a)(2)(B)(i) and Fed. Cir. R. of Prac. 25(a)(1)(A).

Respectfully submitted,

/ Sangeeta G. Shah /

Sangeeta G. Shah (Reg. No. 38,614)
Andrew B. Turner (Reg. No. 63,121)
David S. Bir (Reg. No. 38,383)
Bernard Tomsa (Reg. No. 60,121)
Brooks Kushman P.C.
150 W. Second St.
Suite 400N
Royal Oak, MI 48067
(248) 358-4400

Attorneys for Patent Owner

EXHIBIT A

Trials@uspto.gov
571-272-7822

Paper 42
Date: July 15, 2024

UNITED STATES PATENT AND TRADEMARK OFFICE

BEFORE THE PATENT TRIAL AND APPEAL BOARD

VOLKSWAGEN GROUP OF AMERICA, INC. and
PORSCHE CARS NORTH AMERICA, INC.,
Petitioner

v.

YECHEZKAL EVAN SPERO,
Patent Owner.

IPR2023-00328[†]
U.S. Patent 10,894,503 B2

Before JON M. JURGOVAN, JASON W. MELVIN, and
AARON W. MOORE, *Administrative Patent Judges*.

MOORE, *Administrative Patent Judge*.

JUDGMENT
Final Written Decision
Determining Some Challenged Claims Unpatentable
35 U.S.C. § 318(a)
Dismissing Petitioner's Motion to Exclude Evidence
37 C.F.R. § 42.64(c)

[†] Porsche Cars North America, Inc., which filed a petition in IPR2023-01320, has been joined as a party to this proceeding.

TABLE OF CONTENTS

I. BACKGROUND 3
A. Related Matters 3
B. The '503 Patent 4
II. ANALYSIS 7
A. Level of Ordinary Skill in The Art 7
B. Claim Construction 8
C. Particularity 9
D. Obviousness 10
1. The Prior Art 10
2. Claims 26, 27, 30, 31, and 65 12
a. Karlsson's "Failings" 14
b. Arguments Specific to Claim 26 16
c. Arguments Specific to Claim 65 18
d. Other Arguments 19
e. Conclusion for Claims 26, 27, 30, and 31 19
3. Claims 28 and 68: Colored Light 19
a. Motivation to Combine 20
b. Segmentation and Color Shifting 21
c. Conflicting Control Strategies 22
d. Particularity 23
e. Conclusion for Claims 28 and 68 23
4. Claims 29 and 69: Sensed Fog or Snow 24
5. Claims 32–36 and 70: Curves/Turns 26
a. Change of Beam Color 26
b. Karlsson Would Have No Light to Increase 27
c. Gotou's Teachings Would be Superfluous 27
d. Turn Indicated by Sensor Data 29

e. Full Illumination 30
f. Conclusion for Claims 32–36 and 70 30
6. Claims 66 and 67: Third Subsection 30
a. Use of Colored LEDs to Spotlight 31
b. Karlsson Would Have No Light to Increase 32
c. Control 32
d. Conclusion for Claims 66 and 67 33
E. Obviousness Grounds Based on Beam 33
F. Petitioner's Motion to Exclude 34
III. CONCLUSION 35
IV. ORDER 37

I. BACKGROUND

Volkswagen Group of America, Inc. ("Petitioner") filed a Petition (Paper 2, "Pet.") requesting *inter partes* review of claims 26–36 and 65–70 of U.S. Patent No. 10,894,503 B2 (Ex. 1001, "the '503 patent"). Yechezkal Evan Spero ("Patent Owner") filed a Preliminary Response (Paper 7, "Prelim. Resp.").

We instituted *inter parties* review on July 17, 2023 (*see* Paper 12, "Inst. Dec."), Patent Owner filed a Response (Paper 20, "PO Resp."), Petitioner filed a Reply (Paper 25, "Pet. Reply"), and Patent Owner filed a Sur-Reply (Paper 30, "PO Sur-reply").

An oral hearing was held on April 16, 2023, and a transcript of the hearing is included in the record, as are the demonstratives. *See* Paper 41 ("Tr."); Ex. 1072 (Petitioner Demonstratives); Ex. 2029 (Patent Owner Demonstratives).

We issue this Final Written Decision under 35 U.S.C. § 318(a) and 37 C.F.R. § 42.73 and, for the reasons that follow, determine that Petitioner has shown, by a preponderance of the evidence, that claims 26–28, 30–36 and 65–68 and 70 are unpatentable but has not shown that claims 29 and 69 are unpatentable.

A. Related Matters

Petitioner identifies one civil action, *Torchlight Techs. LLC v. Daimler AG et al.*, No. 1:22-cv-00751 (D. Del.), as a related matter. *See* Pet. 144. Petitioner also identifies U.S. Patent Nos. 9,955,551 and 8,100,552 as having issued from parents of the application that issued as the '503 patent, and U.S. Patent No. 11,208,029, as having issued from a child application. *See id.* at 145.

Patent Owner identifies two civil actions in which the '503 patent has been asserted, *Torchlight Techs. LLC v. Daimler AG et al.*, No. 1:22-cv-00751 (D. Del.), and *Torchlight Techs. LLC v. General Motors LLC et al.*, No. 1:22-cv-00752 (D. Del.), both of which are pending. *See* Paper 4, 1. Patent Owner also identifies two

related *inter partes* reviews, IPR2023-00197 and IPR2023-00335. *See id.* at 1–2. Patent Owner additionally identifies seven other Patent Office proceedings concerning related patents. *See id.* at 2.

B. The '503 Patent

The '503 patent is titled "Detector Controlled Headlight System" and is directed to "[a]n automated headlight system for vehicles [that] replaces the high and low beam with a continuum of beam patterns, with further variable spatial distribution of intensities and color spectrum." Ex. 1001, Abstract. The embodiment that corresponds to the challenged claims is depicted in Figure 15, reproduced in part below:

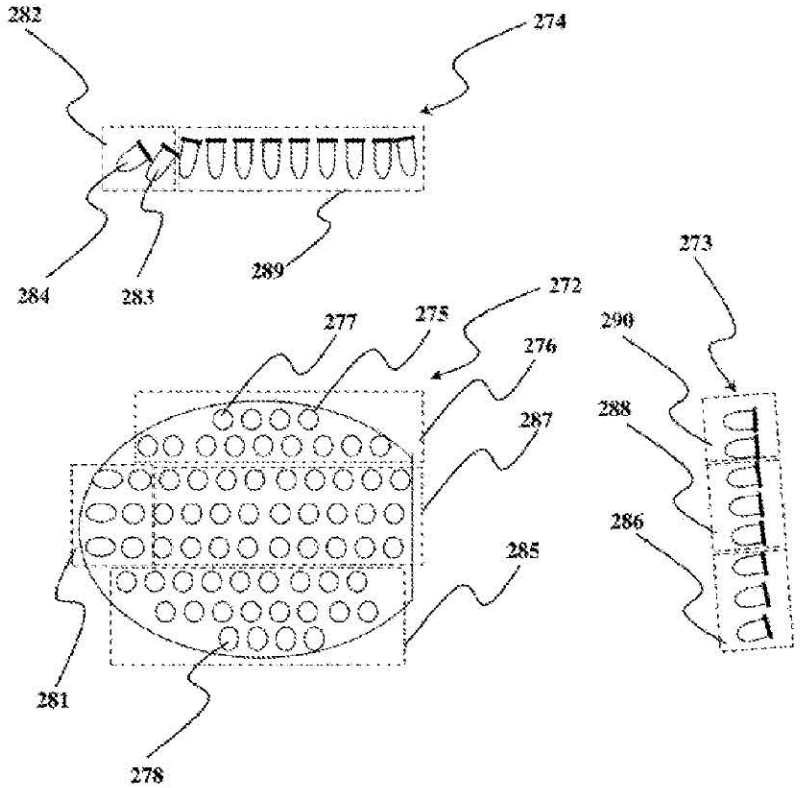

Figure 15 shows a "multiple light-source headlamp." Ex. 1001, 15:64.

The figure depicts "a headlamp 270 of a land, sea or air vehicle . . . in front view 272, side view of a section 273 and top view of a section 274." Ex. 1001,

53:17–19. A solid-state light source, "such as an LED 275 with [a] specific location within the cluster 276 has a specific spatial light distribution, color wavelength and aiming relative to the vehicle, such as straight ahead, and or downwards and or off towards the right or left." Ex. 1001, 53:19–23. Different LED 277, which is "at a second location within the same cluster[,] may have a similar or dissimilar aiming, wavelength and spatial light distribution." *Id.* at 53:29–31.

The patent explains that "headlamp control is automatic, from turning on automatically when ambient lighting levels fall to such a level where it is advantageous to have headlamps on, either to aid in illuminating the way ahead or facilitate being seen by others, to automatic dimming of high beam due to detection of oncoming vehicles and shut off when ambient lighting levels are sufficient." Ex. 1001, 52:25–31. The patent further identifies "[a] possible control system for such purposes [that] is described in U.S. Pat. No. 6,281,632 by Stam, et-al from Aug. 28, 2001," in which "[i]f there is no oncoming traffic, then [the headlamp] operates as [a] high beam," but "[i]f there is oncoming traffic, then it acts as [a] regular low beam." *Id.* at 52:31–33, 52:55–57.

Claims 26 and 65 are independent and directed to methods for generating a headlight beam. They are reproduced in full below:

> 26. A method for generating a headlight beam in an adaptive headlight system that provides illumination to at least a portion of a field-of-view, comprising:
>
> utilizing one or more sensors of a vehicle including the adaptive headlight system to obtain and provide data predefined as relevant to a determination of illumination requirements for the field-of-view, the data including data indicative of at least one of one or more other vehicles or a pedestrian;
>
> determining illumination requirements for the field-of-view based on the data sensed by the sensors, including determining illumination for at least

a first subsection of the field-of-view including the other vehicle or pedestrian, as indicated by the sensor data, and for at least a second subsection of the field-of-view not including the other vehicle or pedestrian;

determining a control strategy for controlling one or more directional light clusters in a headlight assembly to create an output headlight beam meeting the determined illumination requirements, the headlight beam spatial light distribution shaped to provide high beam illumination for a driver of the vehicle, in at least the second subsection, while mitigating glaring light illuminating at least the first subsection including detected other vehicles or pedestrians;

sending control signals implementing the control strategy to an electronic control circuitry configured to operate the light-clusters; and

controlling the light clusters via the electronic control circuitry to collectively emit the headlight beam meeting the determined illumination requirements.

65. A method for generating a headlight beam in an adaptive headlight system that provides illumination to at least a portion of a field-of-view, comprising:

utilizing one or more sensors of a first vehicle to obtain and provide data, the data including data indicating at least a second vehicle;

determining illumination for at least a first subsection including the second vehicle and at least one or more second subsections, to either side of the first subsection, including determining an illumination level for the first subsection that substantially illuminates the first subsection below a predefined illuminance, and determining an illumination level for the one or more second subsections that substantially illuminates the one or more second subsections above the predefined illuminance;

determining control instructions for controlling one or more directional light sources included in the adaptive headlight system to achieve the determined illumination levels for at least the first and one or more second subsections; and

controlling the light sources to emit the headlight beam in accordance with the control instructions.

II. ANALYSIS

We discuss the appropriate level of skill in the art, claim construction, particularity of the Petition, the parties' arguments regarding the obviousness of the challenged claims, and Petitioner's motion to exclude.

A. Level of Ordinary Skill in The Art

Petitioner contends that a person of ordinary skill in the art at the time of the alleged invention "would have had a bachelor's degree (B.S.) in mechanical engineering, electrical engineering, optical engineering, applied physics, or an equivalent field, as well as at least 2 years of industry experience in the area of automotive lighting and lighting-control systems" and "may work as part of a team, for example, with computer engineers to integrate, program, etc., controllers and various control inputs to affect control of a given light source." Pet. 6 (citing Ex. 1003 ¶¶ 42–44).

In the Preliminary Response, Patent Owner asserted that a person of ordinary skill in the art "would have had a Master of Science Degree (or a similar technical Master Degree, or higher degree) in an academic area emphasizing electrical engineering, computer engineering, or computer science with experience or education in optics and imaging systems or, alternatively, a Bachelor's Degree (or higher degree) in an academic area emphasizing electrical, computer engineering or computer science and having two or more years of experience in the field of optical and imaging systems." Prelim. Resp. 9 (citing Ex. 2001 ¶¶ 31–33).

At institution, we adopted Petitioner's proposal, except that we omitted the qualifier "at least" and set the level of experience at two years. *See* Inst. Dec. 8. In its Response, Patent Owner stated that it "does not dispute the Board's proposed level of ordinary skill." PO Resp. 3.

We accordingly maintain the level of ordinary skill in the art we adopted in the Institution Decision.

B. Claim Construction

We construe claims using the standard that would be applied in a civil action under 35 U.S.C. § 282(b), giving terms their ordinary and customary meaning to one of ordinary skill in the art in view of the specification and prosecution history. *See* 37 C.F.R. § 42.100(b).

The Petition discusses Patent Owner's assertion, made during prosecution of a different patent, that "light source" should mean "individual LED" but asserts that "the applied references also cover Patent Owner's proposed construction." *See* Pet. 6–8. Petitioner further stated that it "does not believe any other claim terms require specific construction and should receive their plain and ordinary meaning, in the context of the '503 patent specification." *Id.* at 8.

At institution, we interpreted the term "light source" as the Specification defines it: "any system that is capable of receiving an electrical signal and producing light in response to the signal." Inst. Dec. 8 (citing Ex. 1001, 17:7–10 ("As used herein, the term 'light source', LED or 'solid state light source' means any system that is capable of receiving an electrical signal and producing light in response to the signal.")). Patent Owner agrees with that construction. *See* PO Resp. 6.

However, the reason we interpreted "light source" in the institution decision was that there was a question about whether the individual "microbeams" described in the Beam reference were "light sources." *See* Inst. Dec. 11. Because, as explained below, we do not reach the Beam grounds, we need not construe "light source" in this final decision. We further find that that no other express claim construction is necessary. *See Nidec Motor Corp. v. Zhongshan Broad*

Ocean Motor Co., 868 F.3d 1013, 1017 (Fed. Cir. 2017) (explaining that construction is needed only for terms that are in dispute, and only as necessary to resolve the controversy).

C. Particularity

Patent Owner first argues that "all of Petitioner's combinatorial grounds should be rejected based on finding lack of required statutory particularity." PO Resp. 20. We do not agree.

We addressed this issue at institution, explaining that "we understand the asserted combinations" and that "[a]ssertions that both references disclose a particular claim element do not undermine or overly cloud Petitioner's asserted combinations." Inst. Dec. 15. That remains the case. Patent Owner's attempt to spin some loose language in the Petition into "sixty-one grounds" (PO Resp. 7) is not persuasive, particularly *after* the institution decision, in which we explained how we viewed the combinations presented by Petitioner. *See* Inst. Dec. 11–13. The combinations are simply not as multiplicated and complicated as Patent Owner contends, and Patent Owner acknowledged at the hearing that the alleged multiplicity did not prevent it from addressing any issue. *See* Tr. 37:17–18 ("[Q]: Which of these did you address in your papers? [A]: We address every single one for every single claim.").

Patent Owner also argues that "[the] lack of particularity is compounded by Petitioner's other two petitions challenging the '503 Patent – Petitions that similarly implicate massive numbers of sub-grounds and comparably lacking particularity – resulting in Petitioner asserting at least 149 sub-grounds." PO Resp. 19 (emphasis omitted). We again disagree with Patent Owner's assessment of the number of "sub-grounds" at issue, and conclude, as we did at institution, that three

petitions were justified given the number of asserted claims and differences in claim scope. *See* Inst. Dec. 15.

D. Obviousness

Petitioner asserts that claims 26–31, 65, and 68–69 are unpatentable as obvious in view of Karlsson[2] and Harbers.[3] *See* Pet. 78–125. Petitioner adds Gotou[4] for dependent claims 32–36 and 70 and Braun[5] for dependent claims 66 and 67. *See id.* at 125–141.

1. The Prior Art

Karlsson describes a lighting device with a controllable lighting pattern. The overall structure is shown in Figure 3, which is annotated below:

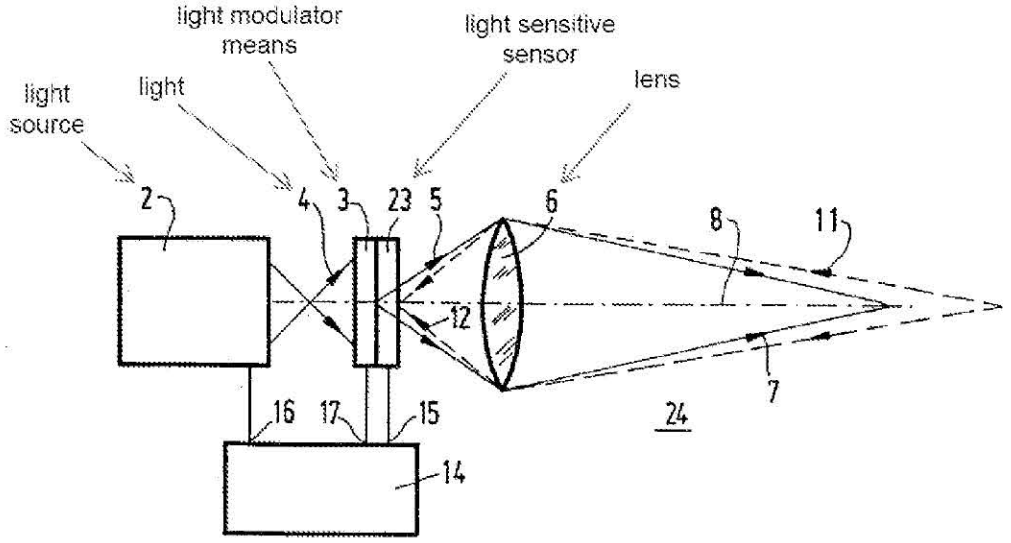

FIG. 3

Karlsson's Figure 3 shows an embodiment with a light sensitive sensor. See Ex. 1010, 7:10–11.

---

[2] PCT Patent App. Pub. No. WO 98,54030 (Exhibit 1010).

[3] PCT Patent App. Pub. No. WO 01/01038 A1 (Exhibit 1011).

[4] U.S. Patent No. 5,588,733 (Exhibit 1012).

[5] PCT Patent App. Pub. No. WO 02/04247 A1 (Exhibit 1009).

The above drawing shows a light source 2 that projects light 4 through a light modulator means 3, a light sensitive sensor 23, and a lens 6 to form a light beam 7. This arrangement "enables the combined use of a single optical system both for forming the 1ight beam 7 to be emitted and for detecting ambient light, due to the intermittent[] control of the lighting means 2, 3, and of the light-sensitive sensor 23, if desired, such that one or the other can be controlled to be light transmittive or light blocking." Ex. 1010, 11:19–23.

Karlsson further describes how "[t]he pattern of the light beam being emitted by the lighting device is automatically and dynamically adapted in dependence on the intensity and the direction of . . . light being detected" and that "[the] part of the light beam which might cause inconvenience to oncoming traffic is automatically suppressed, whilst retaining an optimum lighting effect for the driver of the vehicle himself." Ex. 1010, 2:4–9; *see also id.* at 9:18–33 ("When the lighting device 1 is used as a headlight in a car, the pattern and the intensity of the light beam 7 are, for example, controlled in such a manner that no light at all or light having a low intensity is emitted in those directions from which light is detected by the light-sensitive sensor 9.").

Harbers discloses a vehicle headlight system in which a "light beam generated by the light source has a continuously adjustable spatial distribution." Ex. 1011, 1:26–27. The reference explains that its adjustable spatial distribution improves "the driver's view of the road and the surroundings of the vehicle" because "objects situated on or in the axis of the light beam, such as oncoming traffic, can be better observed" and "also the observation of objects outside the center of the light beam is improved." Ex. 1011, 2:33–3:2.

Gotou is also directed to a vehicle headlamp system. The pertinent disclosure describes adjusting the lighting direction based on map information provided by a navigation system. *See, e.g.*, Ex. 1012, 8:28–35; Fig. 3.

Braun is also directed a vehicle headlight system. Its pertinent disclosures describe identifying and "spotlight[ing] . . . roadway signs to improve readability" as well as how the system may identify and spotlight people. *See, e.g.*, Ex. 1009, 24:2–21, 26:29–27:4.

2. Claims 26, 27, 30, 31, and 65

Independent claim 26 is generally directed to a method for generating a headlight beam that uses one or more sensors to obtain and provide data predefined as relevant to a determination of illumination requirements, including data indicative of another vehicle or a pedestrian. The method determines the illumination requirements for a first subsection of the field-of-view including the other vehicle or pedestrian and for a second subsection not including the other vehicle or pedestrian. It determines a strategy for controlling one or more directional light clusters in a headlight assembly to create an output headlight beam that has a spatial light distribution shaped to provide high beam illumination for a driver of the vehicle, in the second subsection, while mitigating glaring light illuminating in the first subsection. It sends control signals implementing the control strategy to electronic control circuitry configured to operate the light-clusters to collectively emit the headlight beam meeting the illumination requirements.

We have reviewed Petitioner's mapping of the claims to Karlsson (*see* Pet. 78–107) and conclude that Petitioner has shown that Karlsson discloses the subject matter of claim 26. As described above, Karlsson describes generating a headlight beam to illuminate a field-of-view, using a sensor to obtain data indicative of a

vehicle (i.e., headlights), using the sensor data to determine illumination requirements for (i) a first subsection of the field-of-view that includes the vehicle and (ii) a second subsection of the field-of-view that does not include the vehicle, determining a strategy for controlling directional light clusters or sources to create a headlight beam meeting the illumination requirements and shaped to provide high beam illumination for a driver of the vehicle while mitigating glaring light illuminating towards the other vehicle, and sending signals to control the light clusters or sources emit the headlight beam meeting the illumination requirements.

Independent claim 65 is similar to claim 26 but requires that the illumination level for the first subsection (the one with the vehicle) is below a "predefined illuminance" and that the illumination level for the second subsection (with no vehicle) is above the predefined illuminance.

We agree with Petitioner that Karlsson includes a "predefined" illuminance, namely its "dipped" illuminance, and that the first subsection would be illuminated below that predefined illuminance "because it receives 'no light at all or light having a low intensity,' which is below the dipped illuminance." Pet. 109 (citing Ex. 1003 ¶¶ 530–531; Ex. 1010, 9:19–26, Fig. 14).

With respect to the independent claims, the Petition includes Harbers in the event Karlsson does not include "one or more directional light clusters." *See* Pet. 100–101. Patent Owner does not argue that, however, and we conclude, as we did at institution, that Karlsson *does* disclose directional light clusters. *See* Inst. Dec. 13. Each of Karlsson's "headlights" (Ex. 1010, 1:10) would be a "directional" light, as they would, for example, project light from left to right through the lens as shown in Figure 3. We note that, unlike some other claims of the '503 patent, the claims at issue in this proceeding do not require multiple light sources arranged at different angles.

a. Karlsson's "Failings"

Patent Owner argues that "Karlsson's teachings, depending on the situation, are misapplied, are nonexistent as alleged, or fail to meet a limitation of a given claim – substantive failings that extend across all sub-grounds." PO Resp. 58. Patent Owner focuses on Figure 14, arguing that Karlsson does not "actually say" that the "no/low intensity" sections correspond to detected light. *Id.* Patent Owner also argues that "Petitioner's Fig. 14 annotations represent that vertical blanking occurs, i.e., an entire column of light is extinguished in response to detected illumination" but "[t]hat is also not supported by any evidence from Karlsson." *Id.*

We find that Patent Owner's focus on Figure 14 is unduly narrow because, regardless of what that figure shows, Karlsson describes how its light beam is controlled such that "no light at all or light having a low intensity is emitted in those directions from which light is detected by the light-sensitive sensor 9" such that "glaring or blinding of oncoming traffic is effectively prevented." Ex. 1010, 9:20–26.[6] This passage, which is cited in the Petition (*see, e.g.*, Pet. 102–103), is sufficient to disclose the recited first and second sub-sections, the first sub-section being the portion "from which light is detected by the light-sensitive sensor" and the second portion being some other portion of the field of view from which no light was detected.

---

[6] In fact, Karlson explains that adapting the light beam such that "part of the light beam which might cause inconvenience to oncoming traffic is automatically suppressed, whilst retaining an optimum lighting effect for the driver of the vehicle himself" was already known in the art. *See* Ex. 1010, 2:2–9. Karlsson's system retained that prior art feature and improved the headlight with a "partial dimming system," "wherein the possibly disturbing influence of the lighting device's own lighting means on the sensor means is effectively reduced by decreasing the light intensity of the lighting means during the detection by the light sensor means, or, as in another embodiment of the invention, by even switching off the light altogether." *Id.* at 3:7–12.

Patent Owner further argues that Petitioner's position is that Karlsson describes "full usage of the array except when accommodating glare" and that this "interpretation generally supports Patent Owner's similar understanding of how Karlsson functions." PO Resp. 59.

We do not agree that Karlsson is limited to full usage of its array except for accommodating glare, or that Petitioner so argues. Petitioner offers the following annotated version of Karlsson's Figure 14 on page 101 of the Petition:

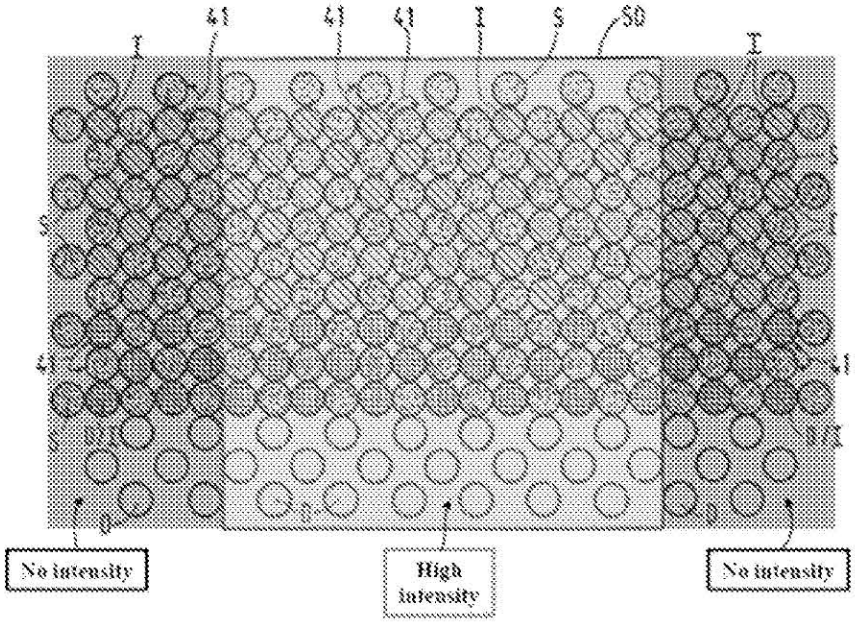

Figure 14 of Karlsson as Annotated by Petitioner

According to Petitioner, this shows first subsections (in grey) corresponding to a detected vehicle and having no intensity and a second subsection (in green) in which light is not suppressed. *See* Pet. 101. In our view, this figure and description illustrate how Karlsson's system might work to dim the light output in the case of oncoming vehicles, but we fail to see how it supports Patent Owner's argument that in the absence of a detected vehicle the entire array *must* be at full intensity. We understand this to be an example of how the system might work, not

an assertion by Petitioner that all areas not corresponding to detected light would always be at full intensity.

In fact, Karlsson explains that "the emitted light beam 50 is represented as a window which can shift in the plane of the drawings from the left to the right and from the top to the bottom, if desired, and vice versa," and that the window "may vary as regards its shape and dimension in dependence on the desired pattern and direction of the beam." Ex. 1010, 19:29–33.

We also note that Karlsson describes how the "part of the light beam which might cause inconvenience to oncoming traffic is automatically suppressed, whilst retaining an *optimum* lighting effect for the driver of the vehicle himself." Ex. 1010, 2:7–9 (emphasis added). The reference thus describes optimal, not maximal, illumination.

We find that Karlsson teaches the skilled artisan that its array of light sources may or may not be fully illuminated, depending on the situation.

b. Arguments Specific to Claim 26

Regarding claim 26, Patent Owner argues that Petitioner's arguments concerning the first and second subsections are "mere conjecture" because "there is no teaching in Karlsson that Fig. 14 represents control over an array responsive to detected light, or that such control would include vertical blanking of LEDs." PO Resp. 60. This is not persuasive because Karlsson explains that the Figure 14 embodiment is "arranged for automatically forming a lighting pattern" (Ex. 1010, 20:6–7), which we understand to refer to its earlier teachings regarding automatic control, including those in which "inconvenience to oncoming traffic is automatically suppressed" (*id.* at 2:7–8). Moreover, Petitioner's contentions are

not limited to Figure 14[7] and we find that Karlsson's teachings regarding selective dimming would be sufficient even if Figure 14 were not referring to them. Patent Owner's arguments about "vertical blanking" are unpersuasive because that is not required by the claims.

Patent Owner also argues that "[c]onfusingly, [Figure 14] does not show an alleged high-intensity area 'to either side of the first subsection.'" PO Resp. 61. This is not persuasive because claim 26 does not require high-intensity light "to either side of the first subsection"; instead, it simply requires "a first subsection of the field-of-view including the other vehicle or pedestrian" and "a second subsection of the field-of-view not including the other vehicle or pedestrian." Karlsson describes dimming the portion of the illumination that would be directed towards an oncoming vehicle, in which case the remaining portions (e.g., an area without oncoming vehicles) would be not be dimmed. Moreover, Figure 14 *does* show a high intensity area on a side of a "first subsection," as the first subsection maps to a grey area on the side which is right next to the high intensity subsection in green in the middle.

Patent Owner next argues that "[f]or the annotated 'high intensity subsection' between the two first subsections, Petitioner makes no valid proof, nor even attempts to prove, that this region is a region 'not including the other vehicle.'" Patent Owner 61–62. Again, however, Figure 14 need not show or describe that, because Karlsson elsewhere clearly describes how its system would create the first and second subsections.

Patent Owner further argues that "Karlsson does not explain exactly which LEDs it chooses in response to a detected light source." PO Resp. 62. We

---

[7] *See, e.g.*, Pet. 80 (citing Ex. 1010, Abstract, 1:18–23, 9:19–22, 19:24–27, Figs. 3, 14–15); *id.* at 92–95 (citing various parts of Karlsson).

disagree. Karlsson specifically describes how it emits "no light at all or light having a low intensity . . . in those directions from which light is detected by the light-sensitive sensor 9." Ex. 1010, 9:20–26. One of ordinary skill in the art would readily understand that the LEDs to choose for dimming would be those that, absent the dimming, would be emitting light towards the oncoming light.

Patent Owner additionally argues that Petitioner "assum[es], unsupportedly and unexplainedly, that [Figure 14's] vertical strips would extend laterally far enough (i.e., in horizontal width) to fully encompass an oncoming vehicle, i.e., that the 'first subsection' in . . . Fig. 14 above would be wide enough so that no portion of the vehicle would be contained in the central region." PO Resp. 62. This is unpersuasive because even if a portion of the vehicle were to fall into the high intensity region, there nevertheless would be part of the high intensity region that does not include the vehicle, which would correspond to the claimed "second subsection of the field-of-view not including the other vehicle or pedestrian." We see no reason why the "subsections" of the claims would need to be coextensive with the regions shown in Figure 14.

c. Arguments Specific to Claim 65

Regarding claim 65, Patent Owner argues that Petitioner has not shown how Karlsson teaches or suggests "determining illumination . . . for one or more subsections, to either side of the first subsection." Specifically, Patent Owner argues that "if Petitioner is correct about Fig. 14, then the singular window of light is never shown to exist on both sides of a detected vehicle" and that "Karlsson never describes creating a plurality of such windows." PO Resp. 64.

This argument is unpersuasive because the claim does not require light "on both sides of a detected vehicle"; instead, it simply requires that illumination is determined for a second subsection to *either* side of the first subsection that

includes the vehicle. Karlsson describes dimming the portion of the illumination that would be directed towards an oncoming vehicle, in which case the remaining portion to at least one side (e.g., in an area without oncoming vehicles) would be determined to be a different level of illumination.

d. Other Arguments

Patent Owner raises a number of arguments about the inclusion of Harbers in the combination, but those arguments are relevant only for dependent claims 28, 29, 68, and 69, which require Harbers' colored lighting scheme. We address those arguments below in connection with those claims.

e. Conclusion for Claims 26, 27, 30, 31, and 65

Patent Owner does not otherwise contest Petitioner's unpatentability assertions regarding independent claims 26 and 65 and any arguments not presented have been waived. Patent Owner does not make separate arguments for claims 27, 30, and 31, instead relying on their dependencies from claim 26. *See* PO Resp. 65, 67.

We have considered Petitioner's contentions in light of the full record and conclude that, for the reasons provided in the Petition, and as discussed above, Petitioner has shown that claims 26, 27, 30, 31, and 65 would have been obvious in view of Karlsson.

3. Claims 28 and 68: Colored Light

Claim 28 requires "defining bluish headlamp illumination along a side of a road, while defining yellow tinted illumination along the road" and claim 68 similarly requires "determining a yellowish illumination color for illumination illuminating a road within the field-of-view and a blueish illumination color for illumination illuminating areas off-road within the field-of-view."[8]

---

[8] Claims 29 and 68 also require colored light, but are addressed separately below.

Petitioner argues that Harbers discloses how its on-axis light is "green-yellow" and that its off-axis light is "blue-green." Pet. 120 (citing Ex. 1011, 5:21–26, 6:3–7, 9:1–10:5, Figs. 1B–2; Ex. 1003 ¶¶ 575–576). Petitioner concludes that "Harbers' independently controllable, colored directional light beam segments 6-6'-6"-6"', 7-7'-7"-7"' provide 'peripheral night vision' with 'blueish . . . illumination along a side of a road . . . [and] yellow tinted illumination along the road' (claim 28), and 'yellowish illumination . . . illuminating a road . . . and a blueish illumination . . . illuminating areas off-road' (claim 68)." *Id.* (citing Ex. 1003 ¶ 576). Petitioner further asserts that Harbers' multiple directional beam segments "would have provided Karlsson's system with different spatial distributions for different driving situations beyond reducing glare for drivers, thereby improving safety." Pet. 83–84.

Patent Owner raises a number of issues with the combination of Karlsson and Harbers, which we address in the order presented.

a. Motivation to Combine

Patent Owner first argues that "Harbers curved substrate alone has not been shown to add anything useful to the combination." Patent Owner 56. This argument is unpersuasive because the combination does not require a curved substrate and Patent Owner does not address the motivation for the combination identified by Petitioner, which is that Harbers' illumination schemes would have provided "improved visibility for different functions, thereby increasing safety." *See* Pet. 82–84 (citing Ex. 1011, 5:14–26, 6:1–7, 6:27–7:19, 8:10–18, Figs. 1B–2; Ex. 1003 ¶ 450).

b. Segmentation and Color Shifting

Patent Owner next argues that "without segmentation the motivation to use Harbers hardware alone is lacking" and that "[f]urther, the use of Harbers' colored array creates a color-shifting problem." PO Resp. 57.

With regard to "segmentation," Patent Owner cities Section VII.A.2.b of the Response, which argues that "[w]hile the system would have included differently colored LEDs, there still would not be a single component of the combination that would have any idea how to segment the beams as Harbers suggests." PO Resp. 34. We disagree. The combination contemplates use of Harbers' illumination scheme, and Harbers explains, in connection with Figure 2, for example, how the light sources are controlled to produce the desired illumination pattern. *See* Ex. 1011, 7:20–9:6.

With regard to "color-shifting," Patent Owner cities Section VII.A.2.c of the Response, which argues that "[w]hen Harbers array, that includes expressly colored LEDs, is utilized in replacement of Karlsson's, problems occur with the selective blanking implemented by Karlsson." PO Resp. 34. According to Patent Owner, light output of the combined system would be "a) the wrong color at many times, b) confusingly colored; c) extremely confusingly colored for vehicles viewing the output (where the color effect will be amplified); and d) continually shifting in color." *Id.* at 36.

This argument is not persuasive because, we conclude, it overstates the problem. These claims require bluish light towards the center and yellowish light to the side. Were an oncoming vehicle in the yellow area, corresponding yellow lights would be dimmed. Were the oncoming vehicle then moved to straddle the yellow and blue areas, the corresponding yellow and blue lights would be dimmed. And if the vehicle were to move to the blue area, the corresponding blue lights

would be dimmed. We agree with Dr. Jiao that one of ordinary skill in this art, which is fairly predictable, would be able to avoid or sufficiently minimize any color shifting problems. *See* Ex. 1051 ¶¶ 162–165. We also credit Dr. Jiao's explanation that, in the combination, there would only be "subtle variations of illuminated color within the range, such as bluish white and yellowish white" and that "all light would be recognized as white light (as defined in standards and regulations)" that not would be problematic in practice. *See id.* ¶ 167.[9]

c. Conflicting Control Strategies

Patent Owner argues that "Petitioner never explains how Karlsson's selective dimming and Harbers particular automatic controls would contemporaneously function in situations where the two strategies required conflicting control." PO Resp. 57

These arguments are unpersuasive because one of ordinary skill in the art would have known to take the aspects of the different strategies that would be desirable for a given application or situation. A proper obviousness analysis considers whether the claimed subject matter would have been obvious in light of the teachings of the prior art, not whether the particular embodiments disclosed in the prior art could actually be combined. *See Allied Erecting and Dismantling Co., Inc. v. Genesis Attachments, LLC*, 825 F.3d 1373, 1381 (Fed. Cir. 2016) ("The test for obviousness is not whether the features of a secondary reference may be bodily incorporated into the structure of the primary reference.") (quoting *In re Keller*, 642 F.2d 413, 425 (CCPA 1981)). The combination would employ Harbers' illumination scheme, but turn off or dim light directed at oncoming vehicles.

---

[9] That one of skill in the art would have had the ability to resolve these types of issues is supported by the fact that the '503 patent describes such a system without identifying these types of problems or describing ways to handle them.

d. Particularity

With respect to what it identifies as "sub-ground" 8C, Patent Owner argues that "there are two controllable systems, an LED array 2 and a modulator 3," that "[t]here are also two control strategies, Karlsson's blanking and Harbers automatic selectivity and beam segmentation," and that "Petitioner never explains which controllable structure would be controlled by which control function, rendering the argument fatally flawed for a lack of particularity." PO Resp. 57 (citing Ex. 2006 ¶ ¶256–257).

We do not agree that Patent Owner has shown a lack of particularity. In Karlsson, LED array 2 and modulator 3 are used together to control the light output. *See* Ex. 1010, 9:3–8 ("The light modulator means 3 are controlled by the control means 14 in such a manner that the light 4 emitted by the light 5 source 2 is processed into a light beam 7 having a desired pattern and intensity.").

As explained in the Petition, the combination contemplates the use of Harbers' illumination scheme, along with Karlsson's teachings about dimming the portion of the projected light that may cause inconvenience to oncoming drivers. *See, e.g.*, Pet. 93. Thus, Karlsson's light source and modulator would be controlled to produce a lighting scheme as described in Harbers, but to selectively dim the areas projecting in the direction of oncoming vehicles as taught in Karlsson.

e. Conclusion for Claims 28 and 68

Patent Owner does not otherwise contest Petitioner's unpatentability assertions regarding these claims and any arguments not presented have been waived. We have considered Petitioner's contentions in light of the full record and conclude that, for the reasons provided in the Petition, and as discussed above, Petitioner has shown that claims 28 and 68 would have been obvious in view of Karlsson.

4. Claims 29 and 69: Sensed Fog or Snow

Claim 29 recites that "the illumination requirements accommodate sensed fog or snow environmental conditions by defining a shift of at least a portion of the headlight beam towards yellow" and claim 69 recites that "the [sensor] data includes data indicating fog or snow environmental conditions."

The Petition asserts that "Karlsson discloses 'spotlight beams 34 can be . . . a grid of separate light sources, such as LEDs' and recognizes the problem of 'scattered reflected light.'" Pet. 122 (citing Ex. 1010, 1:16–24, 4:26–5:15, 9:34–37, 11:25–28, 14:1–15, Figs. 3, 6, 14; Ex. 1003 ¶ 589). The Petition then asserts that "Harbers discloses '[u]nder unfavorable weather conditions, in particular fog and snow . . . a relatively wide beam 16 is obtained which is substantially composed of yellow light.'" *Id.* at 122 (citing Ex. 1011, 10:6–14, FIGS. 1B, 2, 4A, 9:23–25, 4:17–21; Ex. 1003 ¶¶ 590–591). Based on those two points, Petitioner concludes that "Karlsson-Harbers renders obvious claims 29 and 69." *Id.* at 123 (citing Ex. 1003 ¶¶ 593–602).

Patent Owner responds that "Petitioner never proves the presence of 'sensed fog or snow,' or any sensor capable of creating '[sensor] data including data indicating fog or snow'" and that "[m]erely noting that certain beams of Harbers are created for use in fog or snow is insufficient to prove that any processor is determining illumination requirements that accommodate sensed fog or snow . . . or that any sensor data indicates fog or snow." PO Resp. 66 (emphasis omitted).

We agree with Patent Owner that Petitioner has not shown how these claims are rendered obvious in view of these Karlsson and Harbers.

The "scattered reflected light" in Karlsson is described as being caused by "dirty cover glasses," not fog or snow. *See* Ex. 1010, 9:34–36 (explaining that switching the light on and off is advantageous because when the light is off, the

measurement by sensor 9 is not affected by "scattered reflected light" due to "dirty cover glass 19"). Moreover, even if fog or snow might make the cover glass "dirty" nothing in Karlsson *senses* that. Instead, the reference simply explains that the switching of the light is helpful if the glass happens to be dirty. Sensor 9 is used to detect light, such as from oncoming vehicles, not fog or snow (*see* Ex. 1010, 9:9–26), and none of the other passages of Karlsson cited in the Petition describe sensing fog or snow.

Petitioner does not identify anything in Harbers that senses fog or snow, and we do not find a description of that ourselves. Harbers describes adjusting the light based on vehicle velocity, the position of the steering wheel, "weather conditions," or road type (e.g., motorway or country road). *See* Ex. 1011, 3:27–4:32. It seems reasonable to assume that the velocity and position of the steering wheel are sensed, and the reference indicates that light distribution for road type can be adjusted "by the driver." *Id.* at 4:22–25. The reference is silent, however, on how the adjustment based on "weather conditions" is made.

Dr. Jiao cites a passage from Braun about how its "headlights . . . are programmed . . . to detect fog and . . . provide light appropriate for driving in fog" (*see* Ex. 1003 ¶ 590), but Braun is not included in this ground in the Petition (*see* Pet. 3), and neither Petitioner not Dr. Jiao attempts to provide a reason to combine Braun for these claims.

We conclude that, in order to show that these claims would have been obvious, Petitioner would have needed to show that sensing would have been disclosed or inherent in the Harbers/Karlsson combination, obvious in view of Karlsson and Harbers, or that it would have been obvious to add Braun's fog detection to the Karlsson/Harbers combination. As Petitioner did not argue an express or inherent disclosure of fog/snow sensing in Harbers/Karlsson, did not

argue that it would have been obvious to use fog/snow sensing in the Karlsson/Harbers combination, and did not include Braun in the combination, we conclude that Petitioner has not shown that claims 29 and 69 are unpatentable

5. Claims 32–36 and 70: Curves/Turns

Petitioner asserts that claims 32–36 and 70 are unpatentable as obvious in view of Karlsson, Harbers, and Gotou. *See* Pet. 125–133. Essentially, Petitioner argues that it also would have been obvious to modify Karlsson to "adjust light based on map data including road curvature, as in Gotou, to further control Karlsson-Harbers's directional spotlight beams to illuminate roadway curves." Pet. 125 (citing Ex. 1003 ¶¶ 608–611; Ex. 1010, 1:16–26, 4:17–21, 9:18–26).

Patent Owner makes a series of arguments concerning the addition of Gotou to the Karlsson/Harbers combination, which we address in the order raised.

a. Change of Beam Color

Patent Owner argues that, in "sub-ground" 9B, where colored LEDs are utilized with Gotou, any change to a beam that allegedly 'increases' the light or changes the light to illuminate a curve is going to potentially change the color of the beam as well, because certain outer colored LEDs would [be] utilized in the presence of a turn, simply based on their placement (assuming the combination could even achieve the function as Petitioner contends)." PO Resp. 67–68.

This argument is unpersuasive because Harbers does not require different colored light sources; instead, the varying of "spectral characteristics" is described as one alternative embodiment. *See* Ex. 1011, 4:33–6:7. We see no reason why one of ordinary skill in the art would need to use colored light sources if the use of colors would present problems when implementing the teachings of Karlsson (or Gotou) regarding curves/turns. Choosing to illuminate turns at the expense of optimal coloring of different areas would simply be a trade-off the skilled artisan

could make depending on the application and conditions. *See Intel Corp. v. Qualcomm Inc.*, 21 F.4th 784, 795 (Fed. Cir. 2021) (explaining that "simultaneous advantages and disadvantages . . . [do] not necessarily obviate motivation to combine") (quoting *Medichem, S.A. v. Rolabo, S.L.*, 437 F.3d 1157, 1165 (Fed. Cir. 2006)); *see also Corephotonics, Ltd. v. Apple Inc.*, No. 2020-1961, 2021 WL 4944471, at *6 (Fed. Cir. Oct. 25, 2021) (explaining that "it is a commonplace fact that design decisions entail making tradeoffs among multiple objectives"). We also credit Dr. Jiao's testimony that, even if colors were used, any color-shifting would be minimal and that one of ordinary skill would have understood how to combine different colored LEDs in a headlight to emit a light beam having a white color." Ex. 1051 ¶¶ 180–183.

b. Karlsson Would Have No Light to Increase

Patent Owner also argues that "Karlsson's general strategy is to operate optimally at all times, leaving nothing left to be determined for a curvature (claims 32), to be determined for a turn (claims 33, 35) and certainly nothing left to be 'increased' (claims 34, 36, 70)." PO Resp. 68–69. We disagree with this analysis because, as explained above (*see* Section II.D.2.a), we find that Karlsson describes use of a window that "may vary as regards its shape and dimension in dependence on the desired pattern and direction of the beam" (Ex. 1010, 19:29–33) and that Karlsson's "optimal" illumination do not mean maximal illumination. We also note that Karlsson specifically discloses adapting its light beam "when the car 56 is taking a bend." Ex. 1010, 20:22–32.

c. Gotou's Teachings Would be Superfluous

For claim claims 32, 33, and 35, Patent Owner argues that Gotou's determination that there is an upcoming curve/turn "is superfluous, as there is nothing Karlsson could do to comply with any change desired by Gotou, when

operating as proposed by Petitioner for claim 26." PO Resp. 69. Patent Owner then references its arguments regarding claim 26's limitation about determining illumination for the subsection without the vehicle. *See id.* (citing PO Resp. § VII.I.5.a(2)).

We understand this argument to be that Karlsson could not adjust for a curve because it would instead be maximally illuminating any areas that did not include oncoming vehicles. This is unpersuasive because, as noted, we find that Karlsson does not require maximal illumination and that one of ordinary skill would be able chose which features to implement for a given application.

Patent Owner also argues that "Petitioner never explains how Karlsson-Harbers is [illuminating a curve/turn] or which combination of which sub-ground is doing this, or, for that matter, which controllable system is doing this, in combinations 9A and 9C, which both have multiple controllable systems — LED array 2 and modulator 3.," resulting in a "fatal failing in particularity." PO Resp. 69–70. Patent Owner asserts that "[t]here are a multitude of possible problems resulting from the contemporaneous use of three proposed control functions that were never designed to be used in concert," that "[a] massive degree of experimentation would be required to even have a system that functioned in an acceptable manner, assuming such a system even existed – one is certainly never explained," and that "Petitioner never even addresses the existence of these problems, let alone tries to provide a solution to even a single one." PO Resp. 70.

These arguments are unpersuasive. The combination simply involves a headlight illumination scheme, such as that of Harbers, with the added features of selective dimming in the case of oncoming vehicles (as in Karlsson) and turn illumination (as in Gotou). The system would sense oncoming vehicles, as in Karlsson, or curves, as in Gotou, and adjust the intensity of the light sources to

achieve the desired illumination. We find that one of ordinary skill in the art would have been capable of combining these teachings, as evidenced, for example, by the level of detail provided in these references. Patent Owner's claims about "a multitude of possible problems" and "a massive degree of experimentation" are unpersuasively vague and conclusory.

d. Turn Indicated by Sensor Data

According to Patent Owner, Petitioner argues that the upcoming turn being "indicated by the sensor data" is taught by Gotou's statement that "illumination is controlled along the 'planned running direction,'" but that "[w]hether a 'planned running direction' indicates an upcoming 'turn' (not curve) and how that 'planned running direction' results from sensor data is never explained." PO Resp. 70. Patent Owner argues that "[w]hat is never explained, for example, is where or how the 'intended direction of the driver' or 'planned running data' is indicated by sensor data as claimed," because "Karlsson's steering sensor only functions when the vehicle is already being turned," and "there is no evidence presented that Karlsson's light sensor can somehow 'see' curves or turns ahead." *Id.* at 72.

This argument is unpersuasive because, in addition to relying on Karlsson, the Petition asserts that "Gotou's 'ECU 10 gets map information . . . from the navigation system 30 . . . to determine a requisite optical axis angle θ' and 'estimation of the forward road shape . . . [based] on the road data of the map information, so that the lighting region is changed early in the turning direction and the visibility is improved.'" Pet. 132 (citing Ex. 1012, 3:52–63, 4:30–49, 6:28–44, 8:28–35, Figs. 3, 8–10; Ex. 1003 ¶ 631) (emphasis omitted). Patent Owner does not address the Petition's contention that Gotou's navigation system is operating as a sensor, providing data to the system regarding an upcoming curve (which would

be shown in the "forward road shape") or turn (which would be indicated in the "planned running direction").

e. Full Illumination

Finally, Patent Owner argues that claims 34, 36, and 70 all recite "determining illumination that increases illumination" of an upcoming turn road curve and that "the LEDs are already maximally utilized by Karlsson's strategy" such that "there is nothing remaining to increase." Patent Owner 72–73. For the reasons explained above, we find this argument unpersuasive; Karlsson's teachings are not limited to maximum illumination.

f. Conclusion for Claims 32–36 and 70

Patent Owner does not otherwise contest Petitioner's unpatentability assertions regarding claims 32, 33, 34, 35, 36, and 70, and any arguments not presented have been waived. We have considered Petitioner's contentions in light of the full record and conclude that, for the reasons provided in the Petition, and as discussed above, Petitioner has shown that these claims would have been obvious in view of Karlsson, Harbers, and Gotou.

6. Claims 66 and 67: Third Subsection

Claim 66 recites that the sensor data "includes data indicating a pedestrian and . . . determining an illumination level, for at least a third subsection including the pedestrian." Claim 67 is similar, except that the sensor data "includes data indicating a road sign."

Petitioner asserts that these claims are unpatentable as obvious in view of Karlsson, Harbers, and Braun. *See* Pet. 134–141. Specifically, Petitioner argues that Braun discloses recognition of people and spotlights and illuminating the identified features and objects. *See* Pet. 140 (citing Ex. 1009, 5:21–6:7, 14:21–30, 22:17–23, 23:8–24:27, 26:31–27:1, Figs. 5–6; Ex. 1003 ¶¶ 661–662). Petitioner

asserts that one of ordinary skill "would have understood that Braun discloses 'determining an illumination level . . . for at least a third subsection' because Braun's system 'spotlights' (illuminates) 'people' and 'roadway signs' in particular regions of the roadway scene." *Id.* (citing Ex. 1009, 4:17–5:1, 7:1–7, 11:14–17, 23:5–7; Ex. 1003 ¶ 663). Petitioner argues that the addition of Braun's teachings would have improved the combination "by identifying and illuminating objects of interest" to "captur[e] the driver's attention and/or alert[] the driver to the danger of the objects, thereby improving safety." Pet. 137–138 (citing Ex. 1003 ¶ 655).

Patent Owner makes a series of arguments concerning the addition of Braun to the Karlsson/Harbers combination, which we address in the order raised.

a. Use of Colored LEDs to Spotlight

Petitioner argues that, in "sub-ground" 9B, in which "colored LEDs are utilized with Braun, any utilization of a beam to 'spotlight' a person or sign will potentially use colored LEDs, possibly even a single colored LED." PO Resp. 74 (citing Ex. 2006 ¶ 318). According to Patent Owner, "Petitioner never recognizes or addresses this issue, never explaining which LEDs would be used when, but this is yet another reason why a person would not be motivated to utilize the colored LEDs of Harbers in a strategy that now additionally and unpredictably creates 'spotlights' in the scene." *Id.*

The argument is not persuasive because the claims do not require colored LEDs, so we see no reason why the combination would require the use of the Harbers' colored LED embodiment. We further conclude that one of ordinary skill in the art would have been capable of handling these alleged problems. *See* Ex. 1051 ¶ 189–190.

b. Karlsson Would Have No Light to Increase

Patent Owner argues that "Karlsson is already fully utilizing its array, leaving no LEDs left to utilize to 'illuminate' anything, as Braun is stated to do" and that the combination thus "at best results in an unusable determination of the presence of a person or sign." PO Resp. 75. This argument is unpersuasive because, as explained above, we do not agree that Karlsson's array is always at maximum intensity. *See* Section II.D.2.a.

c. Control

Patent Owner argues that "Petitioner fails to note, let alone address, which control function, Karlsson, Harbers or Braun, would be given primacy . . . or how the three control functions would otherwise interact in scenarios where at least two control functions demanded contradictory results." PO Resp. 75.

Patent Owner also argues that "Karlsson has two controllable systems to control light, the source array 2 and the modulator 3" and "three discrete control functions," and that "Petitioner never explains, for example, whether Karlsson would control the LED array or the SLM, whether Harbers strategy would be implemented with the LED or SLM, and/or whether Braun's strategy would be implemented with the LED or SLM." PO Resp. 76.

Patent Owner further argues that "[t]he various strategies will attempt to control elements in conflicting manners, having different desired outcomes and being responsive to discrete variables — e.g., Karlsson may instruct vertical blanking of a region (under Petitioner's solution) where Braun instructs illumination of a person or sign," and that "Petitioner never addresses the conflicts from combining three control strategies with two controllable light-related systems." PO Resp. 76–77.

We find these arguments unpersuasive for the reasons identified above, namely that they amount to an improper, bodily incorporation type of analysis. *See Allied Erecting and Dismantling Co., Inc.*, 825 F.3d at 1381 ("The test for obviousness is not whether the features of a secondary reference may be bodily incorporated into the structure of the primary reference."). The skilled artisan would not need to implement all features of all references, and we conclude they would be able to select which to use in a given application.

d. Conclusion for Claims 66 and 67

Patent Owner does not otherwise contest Petitioner's unpatentability assertions regarding claims 66 and 67, and any arguments not presented have been waived. We have considered Petitioner's contentions in light of the full record and conclude that, for the reasons provided in the Petition, and as discussed above, Petitioner has shown that these claims would have been obvious in view of Karlsson, Harbers, and Braun.

E. Obviousness Grounds Based on Beam

Because we have already determined that claims 26–28, 30–36, 65–68, and 70 are unpatentable in view of the grounds based on Karlsson and Harbers, we need not address Petitioner's challenges to those claims based on Beam and Thominet. However, we have found that Petitioner has not shown claims 29 and 69 unpatentable in view of Karlsson and Harbers, so we must consider whether Petitioner has shown those claims unpatentable in view of Beam, Thominet, and Harbers.

We conclude that Petitioner has not shown that the Beam/Thominet/Harbers combination teaches or suggests the limitations of claims 29 and 69. Beam indicates that the illumination scheme may be adjusted for rain, snow or fog, but describes doing so "manually." *See* Ex. 1005, 3:34–36 ("It will also be possible to

manually lower the beams for conditions like rain, snow, or fog, and again, as a backup in case of ABC system failure.").[10] Beam thus does not disclose sensed fog or snow, Petitioner does not rely on Thominet or Stam for the feature (*see* Pet. 75–78), and, for the reasons explained above (*see* Section II.D.4), Harbers also does not disclose snow/fog sensing. We thus conclude that Petitioner has not shown that claims 29 and 29 would have been obvious in view of Beam, Thominet, Stam and Harbers.

F. Petitioner's Motion to Exclude

Petitioner seeks to exclude the testimony of Patent Owner's declarant, Dr. Turk, asserting that he does not meet the agreed level of ordinary skill in the art. *See* Paper 34 ("Mot. to Exclude") 1. Specifically, Petitioner argues that the agreed level of skill requires "at least 2 years of industry experience in the area of automotive lighting and lighting-control systems" and that Dr. Turk lacks such qualifications. *See id.* at 4–6; Paper 38 ("Mot. to Exclude Reply") 3–4 (arguing that Dr. Turk "has no experience with a vehicle headlamp company, an LED (or any other light source) company, or lighting design, or awards/patents for a vehicle forward lighting system" (citing Paper 31 ("Mot. to Exclude Opp.") 4–5)).

Because Petitioner has prevailed on most of the claims, and our decision with respect to claims 29 and 69 does not rely in any way on Dr. Turk's testimony, we conclude that the Motion to Exclude is moot. It is therefore dismissed.

---

[10] The Petition selectively quoted Beam in order to avoid the word "manually." *Compare* Ex. 1005, 3:34–36 ("It will also be possible to manually lower the beams for conditions like rain, snow, or fog, and again, as a backup in case of ABC system failure."), *with* Pet. 75 ("Beam discloses 'lower[ing] the beams for conditions like rain, snow, or . . . fog.'").

III. CONCLUSION

Petitioner has met its burden of showing that claims 26–28, 30–36, 65–68, and 70 of U.S. Patent 10,894,503 B2 are unpatentable, but has not met its burden of showing that claims 29 and 69 are unpatentable.[11]

Claim(s)	35 U.S.C. §	Reference(s)	Claim(s) Shown Unpatentable	Claim(s) Not Shown Unpatentable
26–31, 65, 68–69	103(a)	Karlsson, Harbers	26–28, 30, 31, 65, 68	29, 69
32–36, 70	103(a)	Karlsson, Harbers, Gotou	32–36, 70	
66–67	103(a)	Karlsson, Harbers, Braun	66–67	
26–27, 30–31	103(a)	Beam, Thominet[††]		
65	103(a)	Beam, Thominet, Stam[††]		
32–36	103(a)	Beam, Thominet, Kobayashi[††]		

[11] Should Patent Owner wish to pursue amendment of the challenged claims in a reissue or reexamination proceeding, we draw Patent Owner's attention to the April 2019 *Notice Regarding Options for Amendments by Patent Owner Through Reissue or Reexamination During a Pending AIA Trial Proceeding*. *See* 84 Fed. Reg. 16654 (Apr. 22, 2019). If Patent Owner chooses to file a reissue application or a request for reexamination of the challenged patent, we remind Patent Owner of its continuing obligation to notify the Board of any such related matters in updated mandatory notices. *See* 37 C.F.R. § 42.8(a)(3), (b)(2).

[††] As noted above, we do not reach this ground because we determine those claims are unpatentable in view of the Karlsson and Harbers grounds. *See* Section II.E.

70	103(a)	Beam, Thominet, Stam, Kobayashi††		
66–67	103(a)	Beam, Thominet, Stam, Braun††		
28–29	103(a)	Beam, Thominet, Harbers††		
68–69	103(a)	Beam, Thominet, Stam, Harbers††		
Overall Outcome			26–28, 30–36, 65–68, 70	29, 69

IV. ORDER

In consideration of the foregoing, it is hereby:

ORDERED that Petitioner has shown by a preponderance of the evidence that claims 26–28, 30–36, 65–68, and 70 of U.S. Patent 10,894,503 B2 are unpatentable;

FURTHER ORDERED that Petitioner has not shown by a preponderance of the evidence that any of claims 29 and 69 are unpatentable;

FURTHER ORDERED that Petitioner's Motion to Exclude Evidence is dismissed as moot; and

FURTHER ORDERED that, because this is a Final Written Decision, parties to the proceeding seeking judicial review of the decision must comply with the notice and service requirements of 37 C.F.R. § 90.2.

FOR PETITIONER 328:

Michael Specht
Jason Fitzsimmons
Daniel Yonan
Ian Soule
STERNE, KESSLER, GOLDSTEIN & FOX P.L.L.C.
mspecht-ptab@sternekessler.com
jfitzsimmons-ptab@sternekessler.com
dyonan-ptab@sternekessler.com
isoule-ptab@sternekessler.com

FOR PETITIONER 1320:

Edgar H. Haug
Robert E. Colletti
HAUG PARTNERS LLP
ehaug@haugpartners.com
rcolletti@haugpartners.com

FOR PATENT OWNER:

Sangeeta Shah
Andrew Turner
David Bir
BROOKS KUSHMAN P.C.
sshah@brookskushman.com
aturner@brookskushman.com
dbir@brookskushman.com

EXHIBIT B

Director_PTABDecision_Review@uspto.gov
571.272.7822

Paper 44
Date: August 28, 2024

UNITED STATES PATENT AND TRADEMARK OFFICE

BEFORE THE OFFICE OF THE UNDER SECRETARY OF COMMERCE FOR INTELLECTUAL PROPERTY AND DIRECTOR OF THE UNITED STATES PATENT AND TRADEMARK OFFICE

VOLKSWAGEN GROUP OF AMERICA, INC. and
PORSCHE CARS NORTH AMERICA, INC.,
Petitioner,

v.

YECHEZKAL EVAN SPERO,
Patent Owner.

IPR2023-00328[1]
Patent 10,894,503 B2

Before KATHERINE K. VIDAL, *Under Secretary of Commerce for Intellectual Property and Director of the United States Patent and Trademark Office.*

ORDER

---

[1] Porsche Cars North America, Inc., which filed a petition in IPR2023-01320, has been joined as a party to this proceeding.

The Office received a request for Director Review of the Final Written Decision for the above-captioned case. *See* Paper 43; Ex. 3103. The request was referred to me.

Upon consideration of the request, it is:

ORDERED that the request for Director Review is denied; and

FURTHER ORDERED that the Patent Trial and Appeal Board's Final Written Decision in this case is the final decision of the agency.

For PETITIONER Volkswagen Group of America, Inc.:

Michael D. Specht
Jason A. Fitzsimmons
Daniel E. Yonan
Ian B. Soule
John D. Higgins
STERNE, KESSLER, GOLDSTEIN & FOX P.L.L.C.
mspecht-PTAB@sternekessler.com
jfitzsimmons-PTAB@sternekessler.com
dyonan-PTAB@sternekessler.com
isoule-PTAB@sternekessler.com
jhiggins-PTAB@sternekessler.com

For PETITIONER Porsche Cars North America, Inc.:

Edgar H. Haug
Robert E. Colletti
HAUG PARTNERS LLP
ehaug@haugpartners.com
rcolletti@haugpartners.com

For PATENT OWNER:

Sangeeta G. Shah
Andrew B. Turner
David S. Bir
BROOKS KUSHMAN P.C.
sshah@brookskushman.com
aturner@brookskushman.com
dbir@brookskushman.com