US005420967A

United States Patent [19]

Delp

[11] **Patent Number: 5,420,967**

[45] **Date of Patent: May 30, 1995**

[54] **METHOD AND APPARATUS FOR THE EFFICIENT GENERATION OF HIGH QUALITY IMAGES IN A COMPUTER SYSTEM UTILIZING AN INTERCONNECTED IMAGE STATE TABLE**

[75] Inventor: **Helen R. Delp**, Rochester, Minn.

[73] Assignee: **International Business Machines Corporation**, Armonk, N.Y.

[21] Appl. No.: **974,866**

[22] Filed: **Nov. 10, 1992**

[51] **Int. Cl.**[6] **G06T 3/00**

[52] **U.S. Cl.** **395/133**; 395/136

[58] **Field of Search** 395/133–139, 395/140, 141, 325; 358/426; 382/56

[56] **References Cited**

U.S. PATENT DOCUMENTS

5,065,447	11/1991	Barnsley et al.	382/56
5,226,125	7/1993	Balmer et al.	395/325
5,245,441	9/1993	Ruben	358/426
5,263,136	11/1993	DeAguiar et al.	395/164

Primary Examiner—Almis R. Jankus
Attorney, Agent, or Firm—Richard E. Billion; Andrew J. Dillon

[57] **ABSTRACT**

A method and apparatus for the efficient generation of high quality images in a computer system is provided. A user requests that one or more images be generated. Representation of each requested image and any existing images are added to an image table. Representations of a group of intermediate images are then added to the image table. Each intermediate image corresponds to a change of an image state between an existing image and a requested image. For example, if a requested image is smaller than an existing image, the scaling of the existing image is a change of image state and will result in the addition of the representation of an intermediate image to the image table. Note that the intermediate image itself is not actually computed or generated at this time. After the representation of each intermediate image has been added to the image table, image paths are built from any existing image to any requested image. An image path includes an existing image, a series of one or more intermediate images, and a requested image. After a network of all the image paths are built, a "cost" of computing the image is calculated for each image path. After these calculations are complete, an optimal image path is selected. The requested image is then generated in a manner determined by the optimal image path. If more than one image is requested, the optimal image path for each requested image is determined by looking at combinations of image paths so that intermediate images generated for one requested image can be used by other requested images.

21 Claims, 33 Drawing Sheets

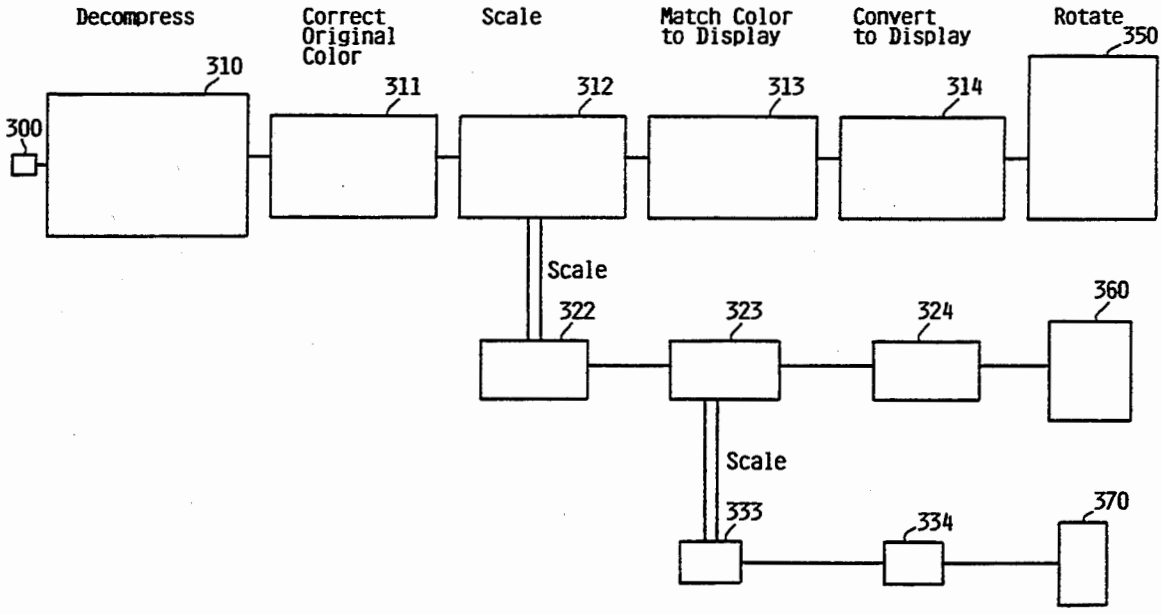

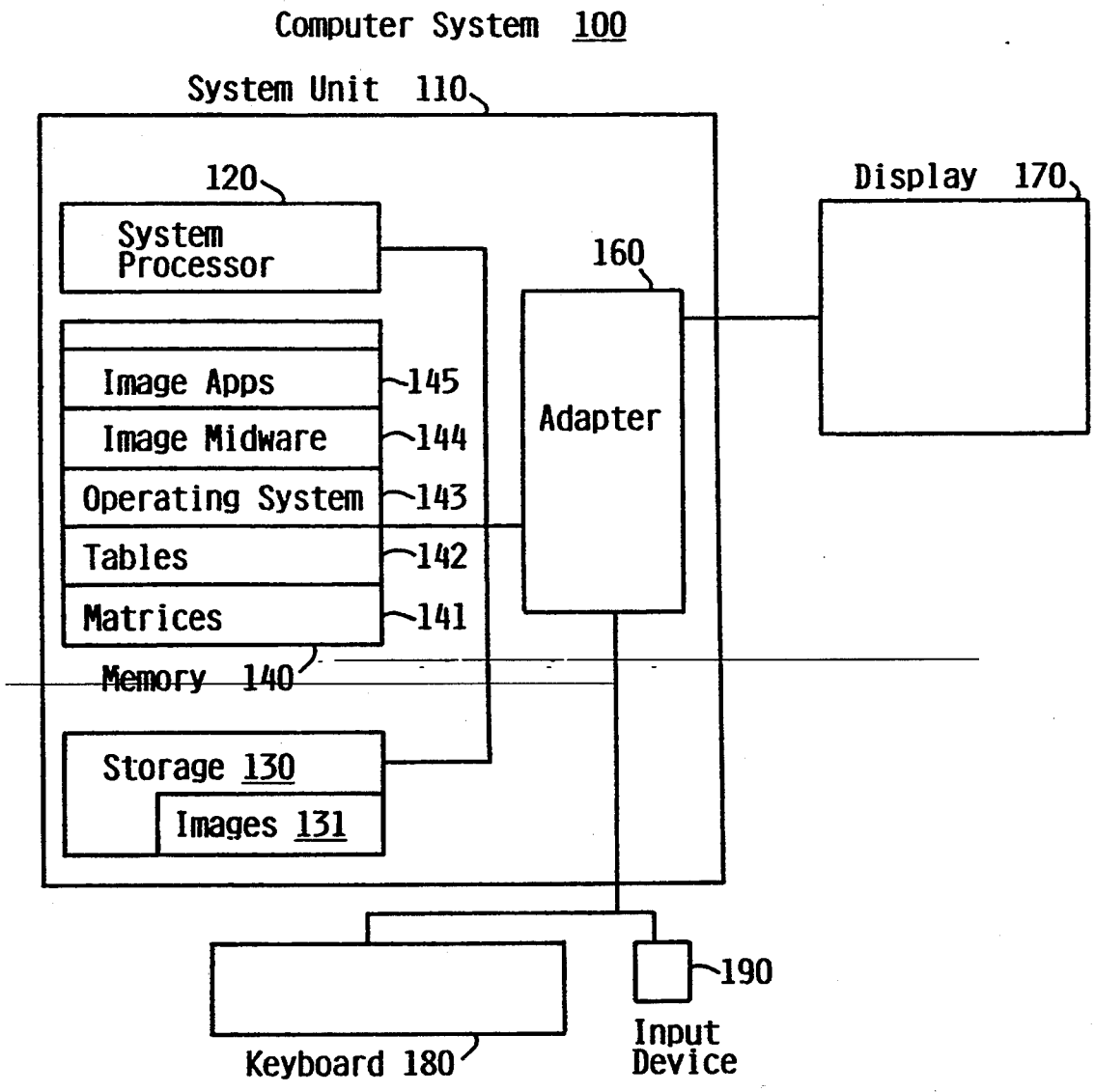
Computer System 100
System Unit 110
120
System Processor
Image Apps
145
Image Midware
144
Operating System
143
Tables
142
Matrices
141
Memory 140
Storage 130
Images 131
160
Adapter
Display 170
190
Input Device
Keyboard 180

FIG. 1

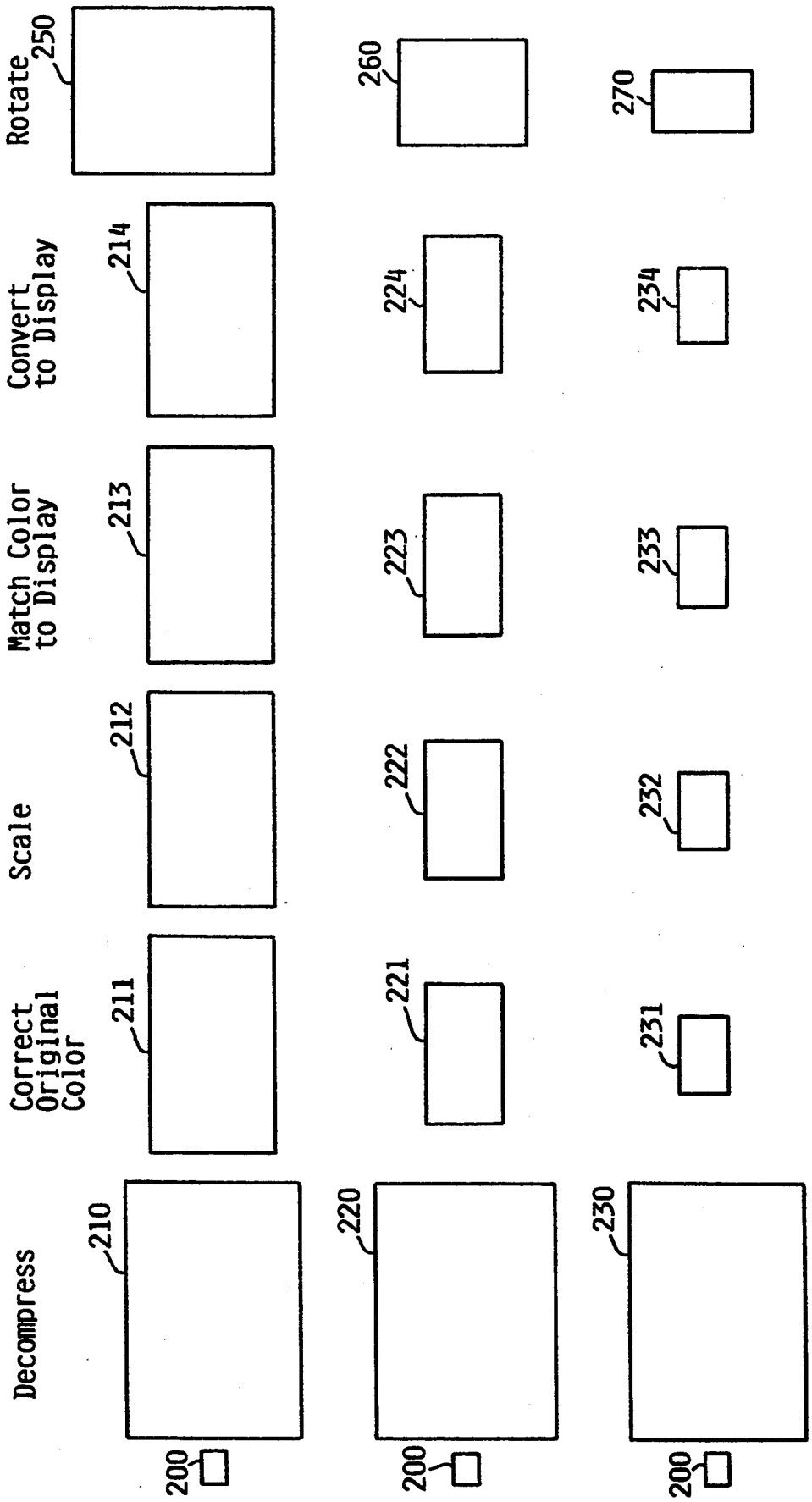
Decompress
Correct Original Color
Scale
Match Color to Display
Convert to Display
Rotate
200
210
211
212
213
214
250
200
220
221
222
223
224
260
200
230
231
232
233
234
270

FIG. 2

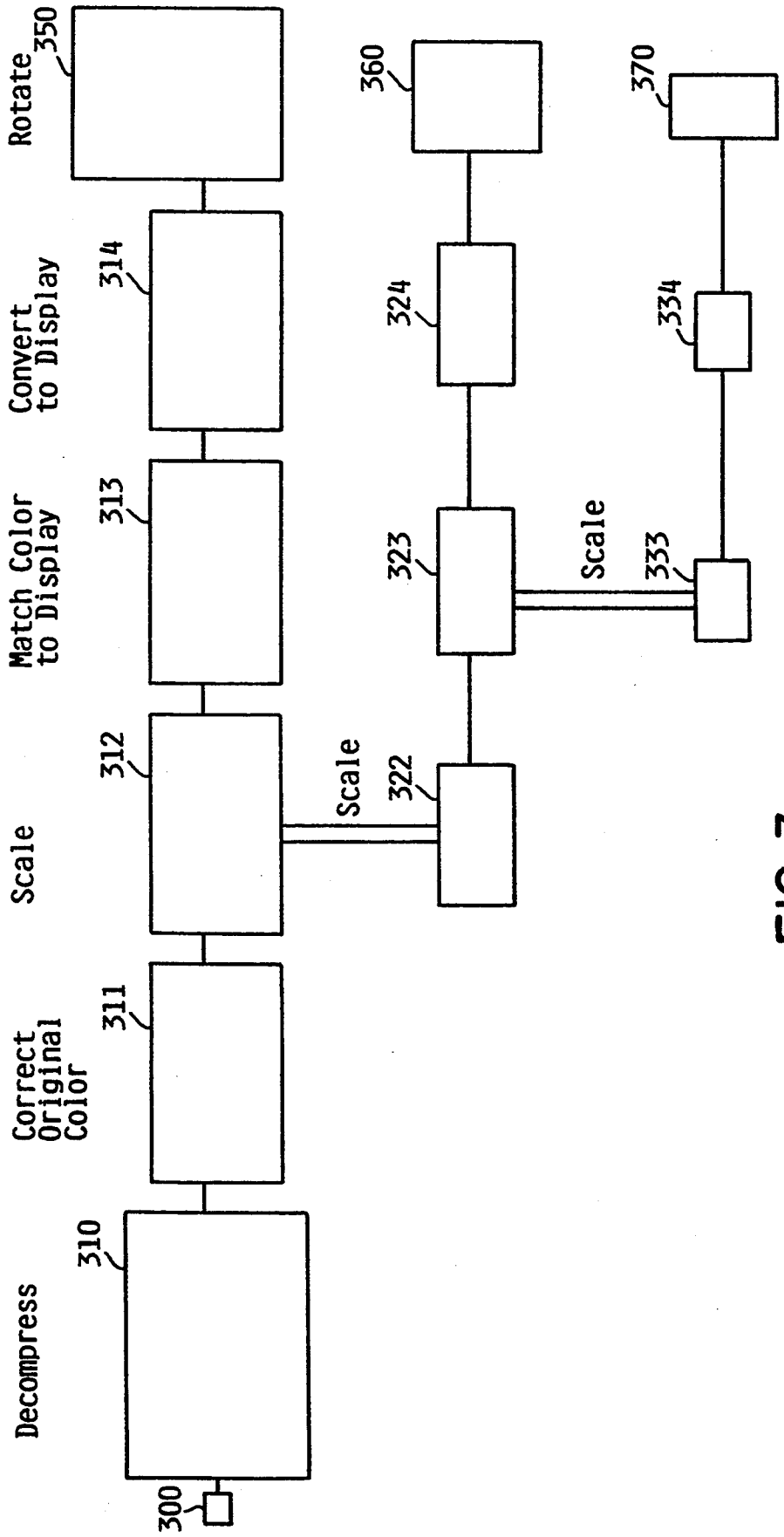
Decompress
310
300
Correct Original Color
311
Scale
312
Match Color to Display
313
Convert to Display
314
Rotate
350
Scale
322
323
324
360
Scale
333
334
370

FIG. 3

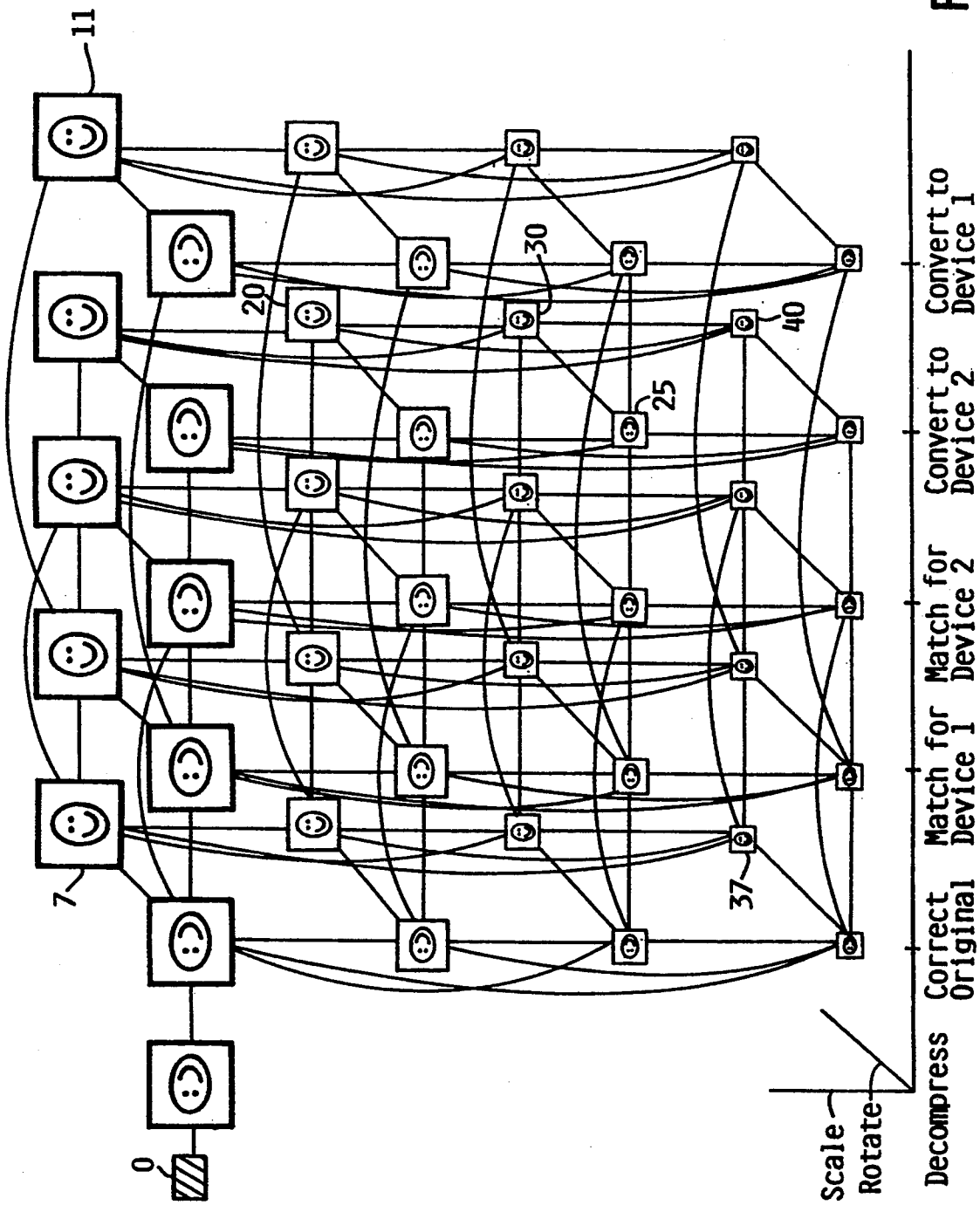
11
7
0
20
30
25
40
37
Scale
Rotate
Decompress
Correct Original
Match for Device 1
Match for Device 2
Convert to Device 2
Convert to Device 1

FIG. 4A

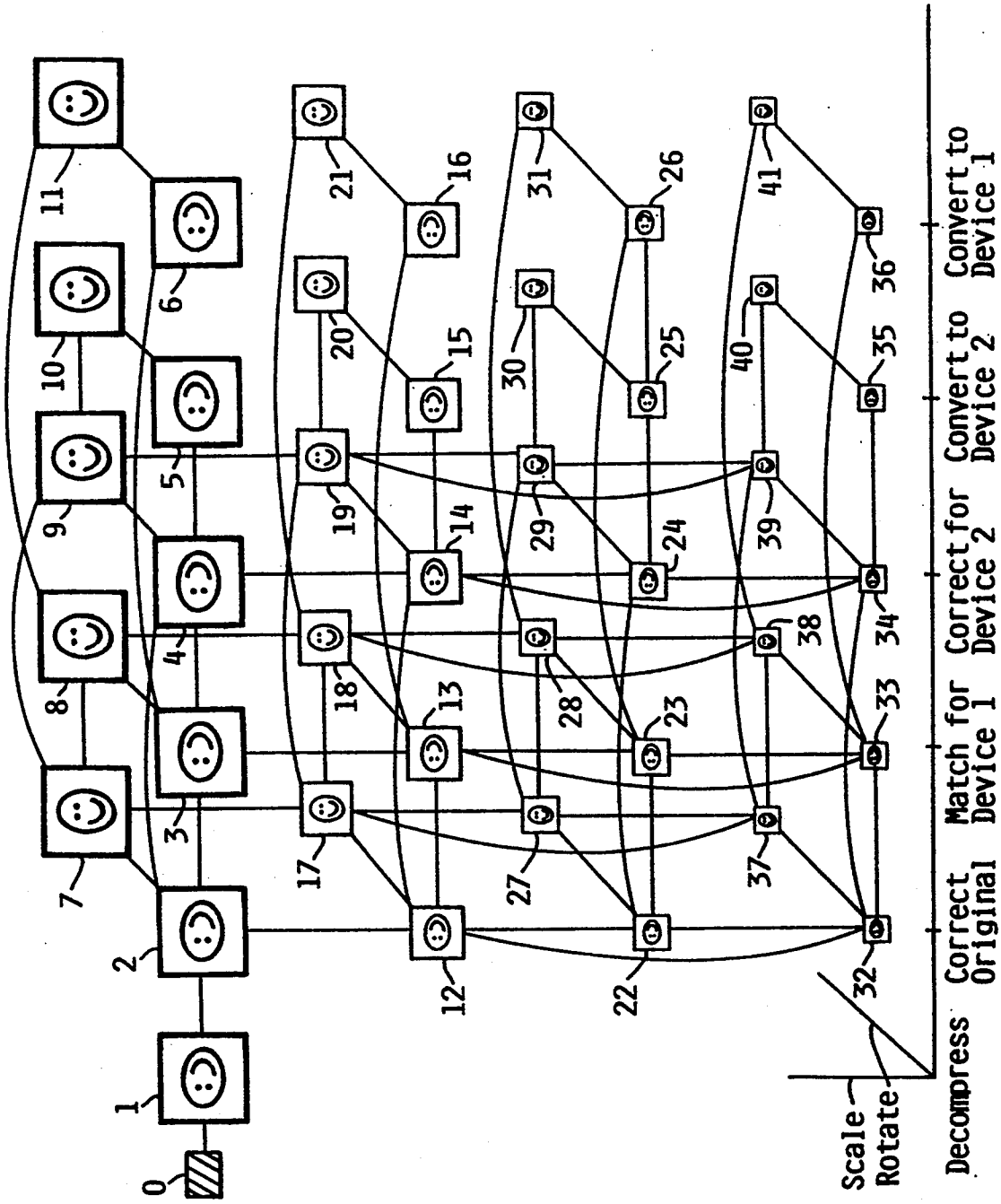
0
1
2
3
4
5
6
7
8
9
10
11
12
13
14
15
16
17
18
19
20
21
22
23
24
25
26
27
28
29
30
31
32
33
34
35
36
37
38
39
40
41
Decompress
Scale
Rotate
Correct Original
Match for Device 1
Correct for Device 2
Convert to Device 2
Convert to Device 1

FIG. 4B

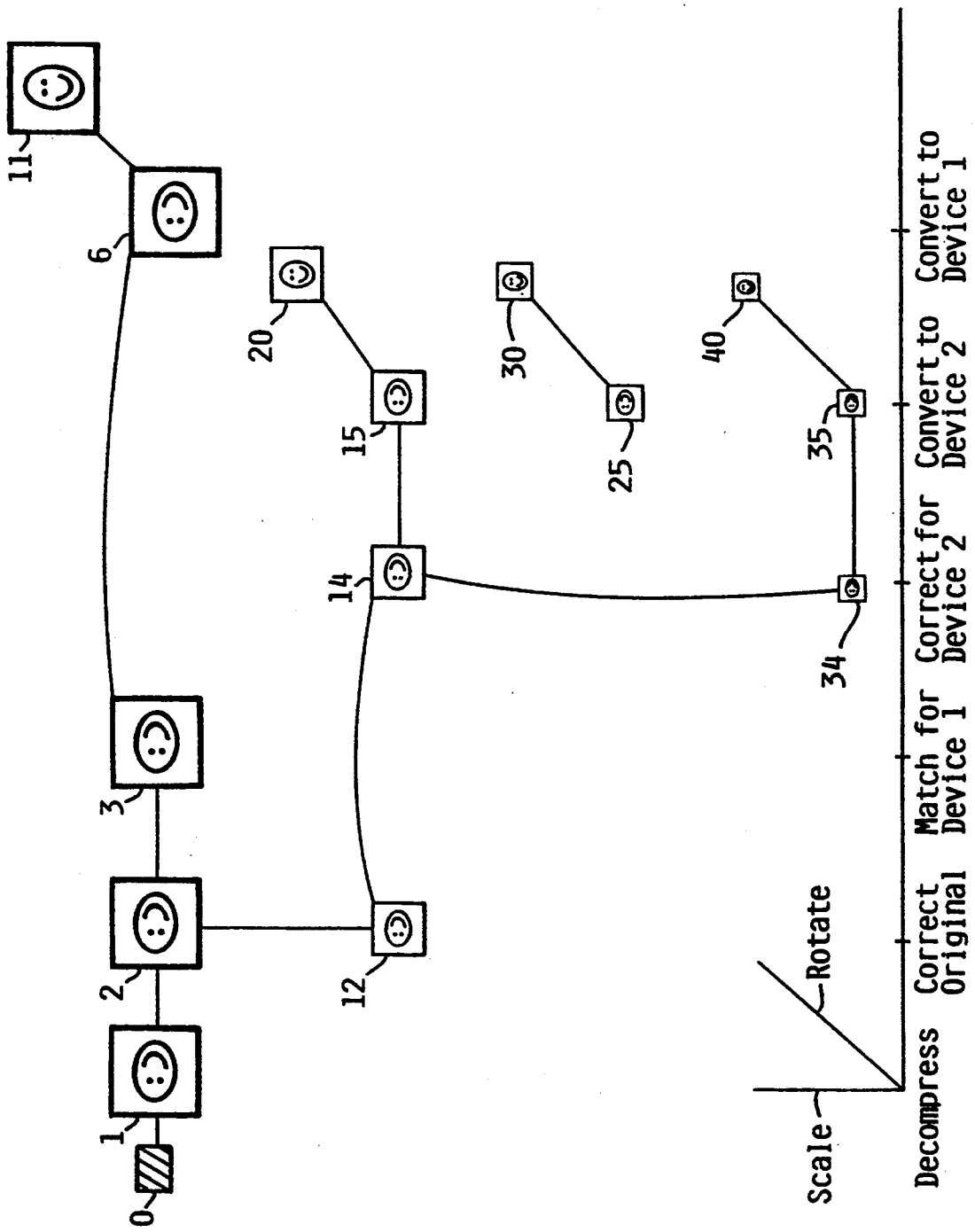
0
1
2
3
6
11
12
14
15
20
25
30
34
35
40
Decompress
Correct Original
Match for Device 1
Correct for Device 2
Convert to Device 2
Convert to Device 1
Scale
Rotate

FIG. 4C

Scale State Table

State	Width	Height
1	768	1024
2	576	768
3	384	512
4	192	256

FIG. 5A

Rotation State Table

State	Orientation
1	90 degrees ccw
2	normal viewing

FIG. 5B

Match State Table 510 520

State	Color Matrix ID	Non-Linear Table ID	Valid Conversion States
1	Nikon scanner	gamma 1.4	1
2	6091 monitor	gamma 2.7	1,2
3	8514 monitor	gamma 2.2	1,3

FIG. 5C

Conversion State Table 530

State	Conversion	Non-Linear Table ID	Bytes/Pixel
1	none	none	3
2	dither	dither table	2
3	error-diffuse	palette table	1

FIG. 5D

Color Matrix ID

2.570	-1.309	-.392	-.828	1.615	0.021	0.053	-.193	1.140

FIG. 5G

Palette Table

0	40	237	630	1386	2448	4095	0	27	106	381	853	1601	2592	4095	0	285	1521	4095

FIG. 5I

Image Table:

	550	561	562	563	564	570	581	582	583
							--Correct Original--		
imag	status	scale state	match state	rotate state	convert state	compress	dynamic range	gamma correct	sigma correct
0	1	1	1	1	1	Y	Y	Y	Y
1	1	1	1	1	1	N	Y	Y	Y
2	3	1	1	1	1	N	Y	Y	Y
3	3	1	2	1	1	N	Y	Y	Y
4	3	1	3	1	1	N	Y	Y	Y
5	3	1	3	1	3	N	Y	Y	Y
6	3	1	2	1	2	N	Y	Y	Y
7	3	1	1	2	1	N	Y	Y	Y
8	3	1	2	2	1	N	Y	Y	Y
9	3	1	3	2	1	N	Y	Y	Y
10	3	1	3	2	3	N	Y	Y	Y
11	2	1	2	2	2	N	Y	Y	Y
12	3	2	1	1	1	N	Y	Y	Y
13	3	2	2	1	1	N	Y	Y	Y
14	3	2	3	1	1	N	Y	Y	Y
15	3	2	3	1	3	N	Y	Y	Y
16	3	2	2	1	2	N	Y	Y	Y
17	3	2	1	2	1	N	Y	Y	Y
18	3	2	2	2	1	N	Y	Y	Y
19	3	2	3	2	1	N	Y	Y	Y

FIG. 5E-1

FIG. 5E-2

20	2	2	3	2	1	3	N	Y	Y	Y
21	3	2	2	2	1	2	N	Y	Y	Y
22	3	1	3	1	1	1	N	Y	Y	Y
23	3	1	3	2	1	1	N	Y	Y	Y
24	3	3	3	3	1	1	N	Y	Y	Y
25	1	3	3	3	1	3	N	Y	Y	Y
26	3	3	3	2	1	2	N	Y	Y	Y
27	3	3	3	1	2	1	N	Y	Y	Y
28	3	3	3	2	2	1	N	Y	Y	Y
29	3	3	3	3	2	1	N	Y	Y	Y
30	2	3	3	3	2	3	N	Y	Y	Y
31	3	3	3	2	2	2	N	Y	Y	Y
32	3	4	1	1	2	1	N	Y	Y	Y
33	3	4	1	2	1	1	N	Y	Y	Y
34	3	4	1	3	1	1	N	Y	Y	Y
35	3	4	1	3	1	3	N	Y	Y	Y
36	3	4	1	2	1	2	N	Y	Y	Y
37	3	4	2	1	2	1	N	Y	Y	Y
38	3	4	2	2	2	1	N	Y	Y	Y
39	3	4	2	3	2	1	N	Y	Y	Y
40	2	4	2	3	2	3	N	Y	Y	Y
41	3	4	2	2	2	2	N	Y	Y	Y

	Image	Path	Image Sequence	Deterioration
610	11	1	0 7 8 11	4
	11	2	0 3 8 11	4
	11	3	0 3 6 11	4
620	20	1	0 12 14 15 20	11
	20	2	0 12 17 19 20	11
	20	3	0 12 14 19 20	11
	20	4	0 4 14 15 20	11
	20	5	0 4 14 19 20	11
	20	6	0 4 9 19 20	11
	20	7	0 7 9 19 20	11
	20	8	0 7 17 19 20	11
630	30	1	0 12 22 24 25 30	12
	30	2	0 12 22 24 29 30	12
	30	3	0 12 22 27 29 30	12
	30	4	0 12 14 24 29 30	12
	30	5	0 12 14 24 25 30	12
	30	6	0 12 14 19 29 30	12
	30	7	0 12 17 19 29 30	12
	30	8	0 12 17 27 29 30	12
	30	9	0 4 14 24 25 30	12
	30	10	0 4 14 24 29 30	12
	30	11	0 4 14 19 29 30	12
	30	12	0 4 9 19 29 30	12
	30	13	0 7 17 27 29 30	12
	30	14	0 7 17 19 29 30	12
	30	15	0 7 9 19 29 30	12
	30	16	25 30	12
640	40	1	0 12 32 34 35 40	13
	40	2	0 12 14 34 35 40	13
			⋮	

FIG. 5F

Non-Linear Table

0	0	0	1	2
3	4	6	8	9
12	14	16	19	22
24	28	31	34	38
41	45	49	53	58
62	67	71	76	81
86	92	97	103	108
114	120	126	133	139
145	152	159	166	173
180	187	195	202	210
218	225	234	242	250
258	267	276	284	293
302	311	321	330	340
349	359	369	379	389
399	409	420	430	441
452	463	474	485	496
508	519	531	543	554
566	578	591	603	615
628	640	653	666	679
692	705	718	732	745
759	773	786	800	814
829	843	857	872	886
901	916	931	946	961
976	991	1007	1022	1038

1054	1070	1086	1102	1118
1134	1151	1167	1184	1201
1217	1234	1251	1268	1286
1303	1320	1338	1356	1373
1391	1409	1427	1445	1463
1482	1500	1519	1537	1556
1575	1594	1613	1632	1652
1671	1690	1710	1730	1749
1769	1789	1809	1829	1850
1870	1890	1911	1932	1952
1973	1994	2015	2036	2058
2079	2100	2122	2144	2165
2187	2209	2231	2253	2275
2298	2320	2343	2365	2388
2411	2434	2457	2480	2503
2526	2550	2573	2597	2620
2644	2668	2692	2716	2740
2764	2788	2813	2837	2862
2887	2911	2936	2961	2986
3012	3037	3062	3088	3113
3139	3165	3190	3216	3242
3268	3295	3321	3347	3374
3400	3427	3454	3481	3508
3535	3562	3589	3616	3644
3671	3699	3726	3754	3782
3810	3838	3866	3894	3923
3951	3980	4008	4037	4066
4095				

FIG. 5H

Dither Table

0 0 0 0	0 0 0 0	0 0 0 0
4 3 3 4	9 8 8 9	5 5 5 5
4 4 4 4	9 9 9 9	5 5 5 5
5 4 4 4	10 9 9 9	6 5 5 5
5 4 4 4	10 9 9 10	6 5 5 5
5 4 4 5	10 10 9 10	6 5 5 6
5 4 4 5	10 10 10 10	6 5 5 6
5 5 4 5	11 10 10 10	6 6 5 6
5 5 4 5	11 10 10 10	6 6 5 6
5 5 5 5	11 10 10 11	6 6 6 6
5 5 5 5	11 11 10 11	6 6 6 6
6 5 5 5	11 11 10 11	6 6 6 6
6 5 5 5	11 11 11 11	6 6 6 6
6 5 5 5	12 11 11 11	7 6 6 6
6 5 5 5	12 11 11 11	7 6 6 6
6 5 5 6	12 11 11 12	7 6 6 6
6 5 5 6	12 11 11 12	7 6 6 6
6 5 5 6	12 12 11 12	7 6 6 7
6 6 5 6	12 12 11 12	7 6 6 7
6 6 5 6	12 12 12 12	7 6 6 7
6 6 5 6	12 12 12 12	7 6 6 7
.	.	.
.	.	.
.	.	.
.	.	.
.	.	.
.	.	.
31 31 31 31	63 63 63 63	31 31 31 31
31 31 31 31	63 63 63 63	31 31 31 31
31 31 31 31	63 63 63 63	31 31 31 31

FIG. 5J

Adjacency Matrix of Computation Costs

	0	3	4	5	6	7	8	9	10	11	12	13	14	15	16	17	18	19	20
0	-	75	75			76					2000								
3		-			21		76					2000							
4			-	126				76					2000						
5				-					29										
6					-					29									
7						-	75	75								2000			
8							-			21							2000		
9								-	126									2000	
10									-										
11										-									
12											-	43	43			45			
13												-			12		45		
14													-	70				45	
15														-					18
16															-				
17																-	43	43	
18																	-		
19																		-	70
20																			-

FIG. 6A-1

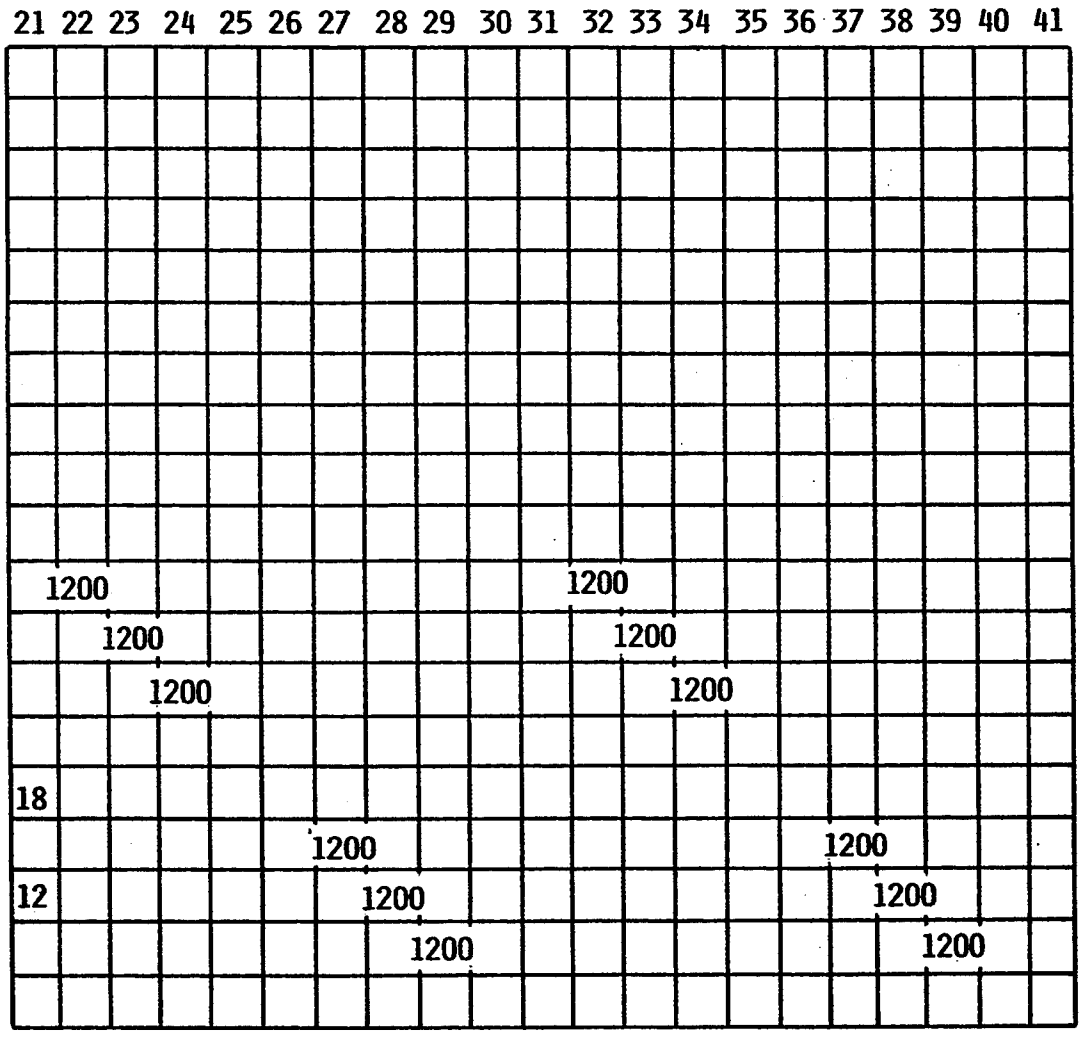
21 22 23 24 25 26 27 28 29 30 31 32 33 34 35 36 37 38 39 40 41
1200
1200
1200
1200
1200
1200
18
1200
1200
12
1200
1200
1200

FIG. 6A-2

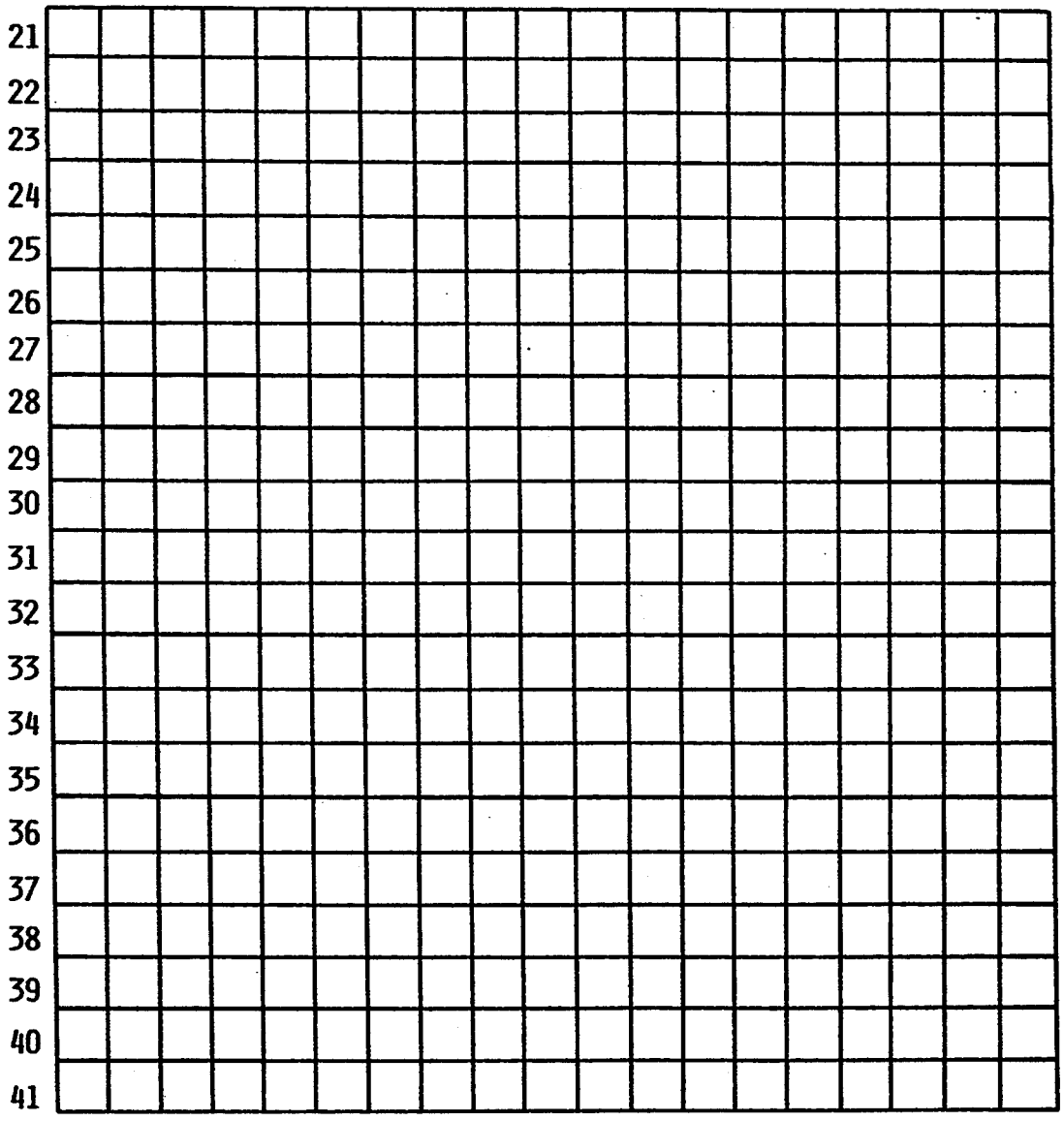

FIG. 6A-3

-																					
	-	19	19			23					500										
		-			5		23					500									
			-	31				23					500								
				-					11												
					-					11											
						-	19	19								500					
							-			5							500				
								-	31									500			
									-												
										-											
											-	5	5			9					
												-			1		9				
													-	8				9			
														-					6		
															-					6	
																-	5	5			
																	-			1	
																		-	8		
																			-		
																					-

FIG. 6A-4

Adjacency Matrix of image deterioration

	0	3	4	5	6	7	8	9	10	11	12	13	14	15	16	17	18	19	20
0	-	1	1			0					1								
3		-			3		0					1							
4			-	9				0					1						
5				-					0										
6					-					0									
7						-	1	1								1			
8							-			3							1		
9								-	9									1	
10									-										
11										-									
12											-	1	1			0			
13												-			3		0		
14													-	9				0	
15														-					0
16															-				
17																-	1	1	
18																	-		
19																		-	9
20																			-

FIG. 6B-1

21	22	23	24	25	26	27	28	29	30	31	32	33	34	35	36	37	38	39	40	41
	1										1									
		1										1								
			1										1							
0																				
						1										1				
3							1										1			
								1										1		

FIG. 6B-2

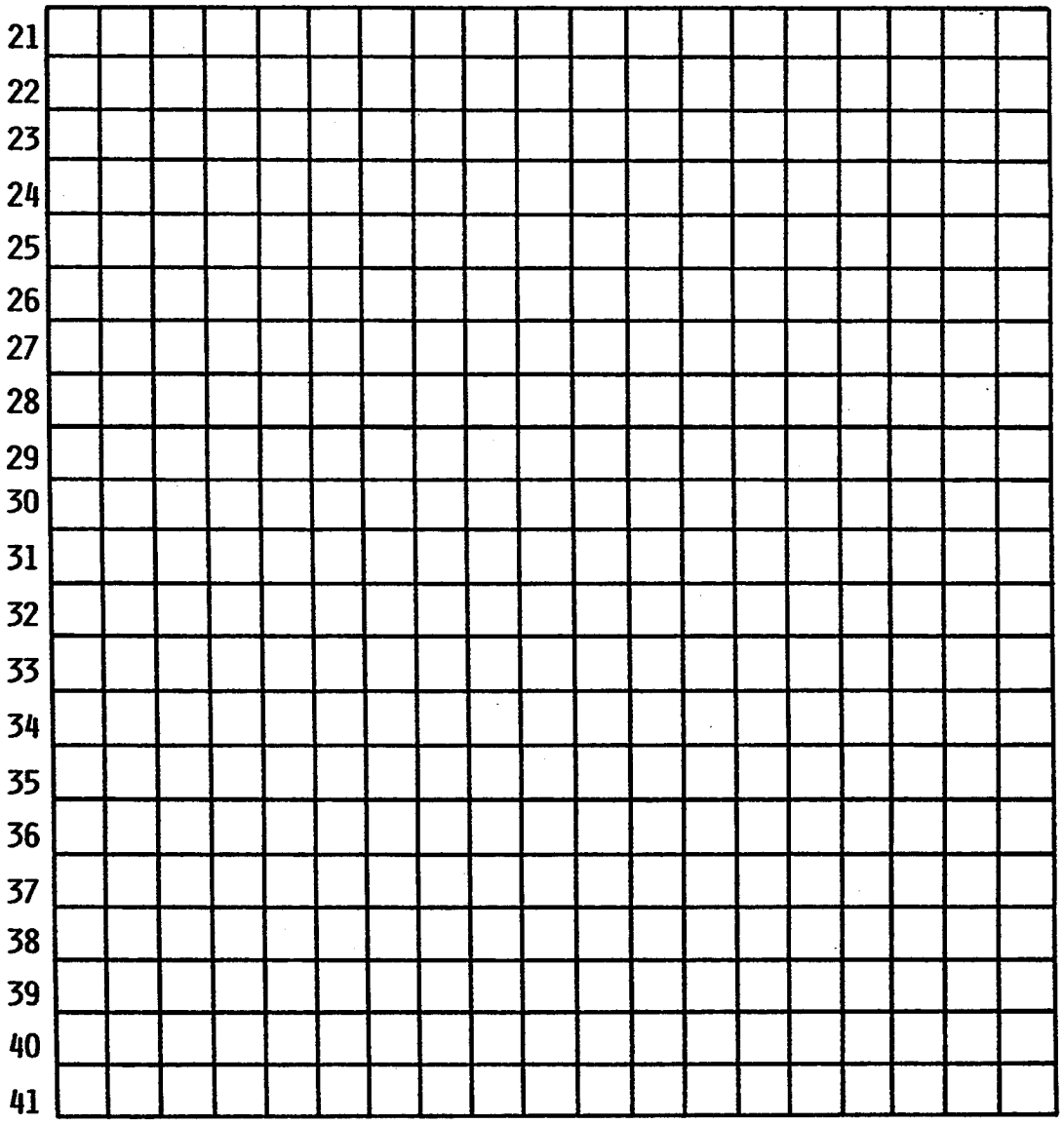

FIG. 6B-3

-																				
	-	1	1			0					1									
		-			3		0					1								
			-	9				0					1							
				-					0											
					-					0										
						-	1	1								1				
							-			3							1			
								-	9									1		
									-											
										-										
											-	1	1			0				
												-			3		0			
													-	9				0		
														-					0	
															-					0
																-	1	1		
																	-			3
																		-	9	
																			-	

FIG. 6B-4

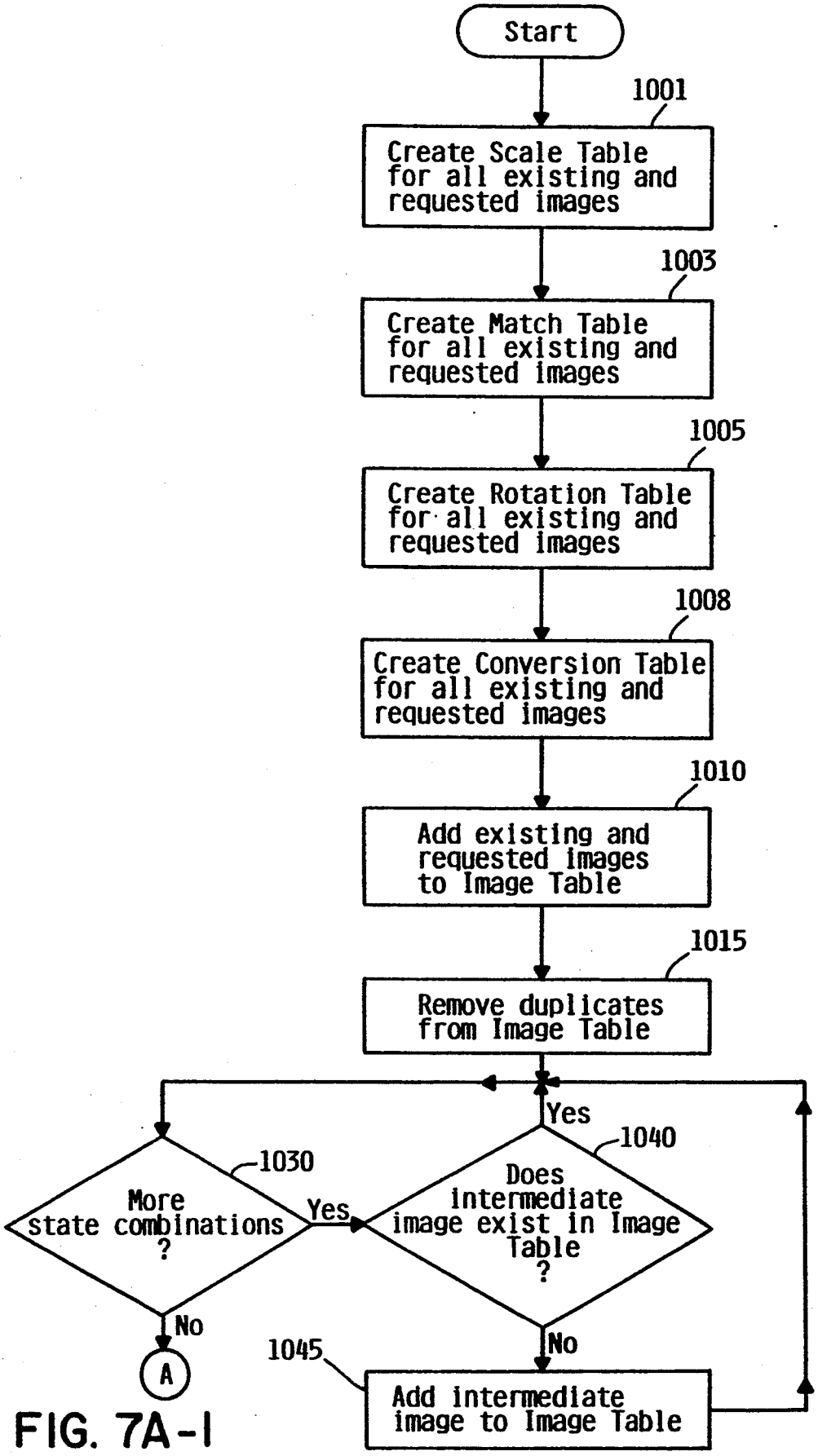
Start
1001
Create Scale Table for all existing and requested images
1003
Create Match Table for all existing and requested images
1005
Create Rotation Table for all existing and requested images
1008
Create Conversion Table for all existing and requested images
1010
Add existing and requested images to Image Table
1015
Remove duplicates from Image Table
1030
More state combinations ?
Yes
No
A
1040
Does intermediate image exist in Image Table ?
Yes
No
1045
Add intermediate image to Image Table

FIG. 7A-1

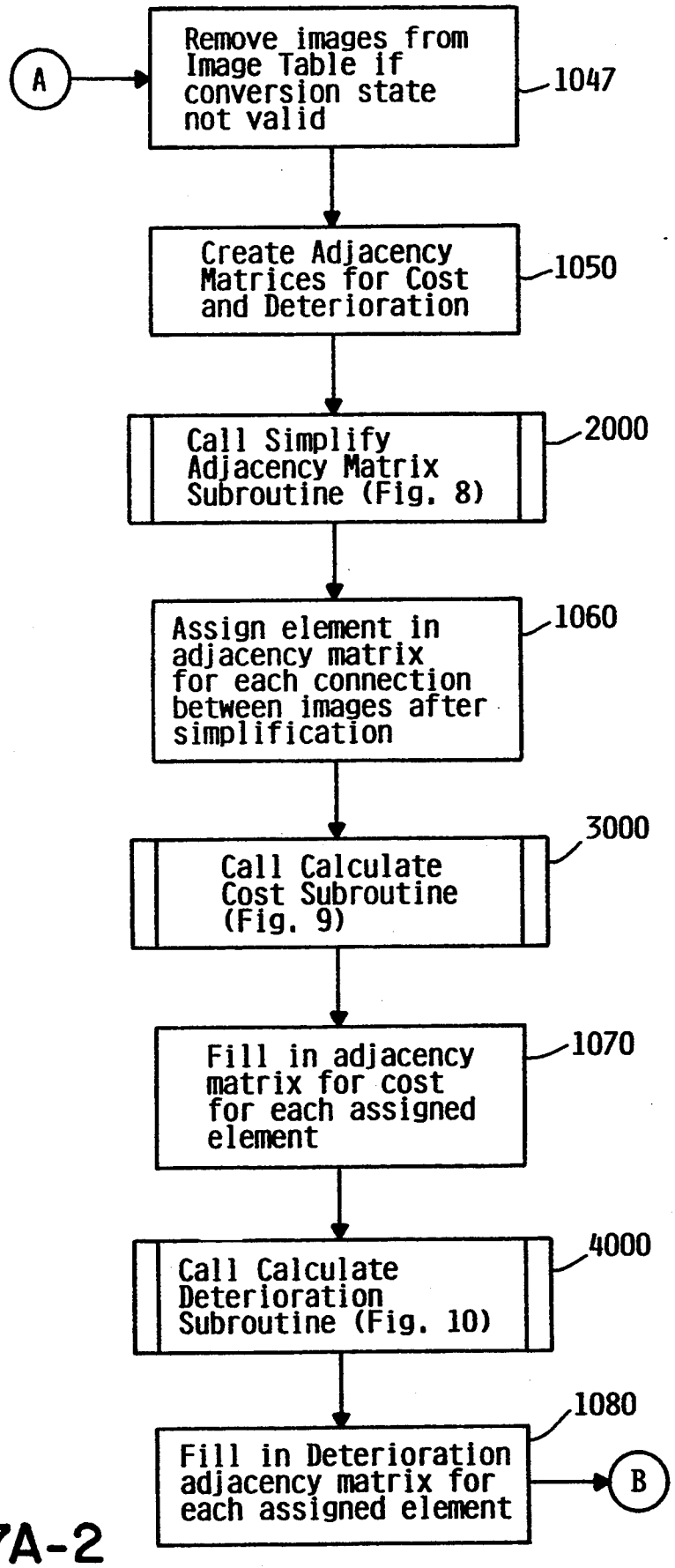
A
Remove images from Image Table if conversion state not valid
1047
Create Adjacency Matrices for Cost and Deterioration
1050
Call Simplify Adjacency Matrix Subroutine (Fig. 8)
2000
Assign element in adjacency matrix for each connection between images after simplification
1060
Call Calculate Cost Subroutine (Fig. 9)
3000
Fill in adjacency matrix for cost for each assigned element
1070
Call Calculate Deterioration Subroutine (Fig. 10)
4000
Fill in Deterioration adjacency matrix for each assigned element
1080
B

FIG. 7A-2

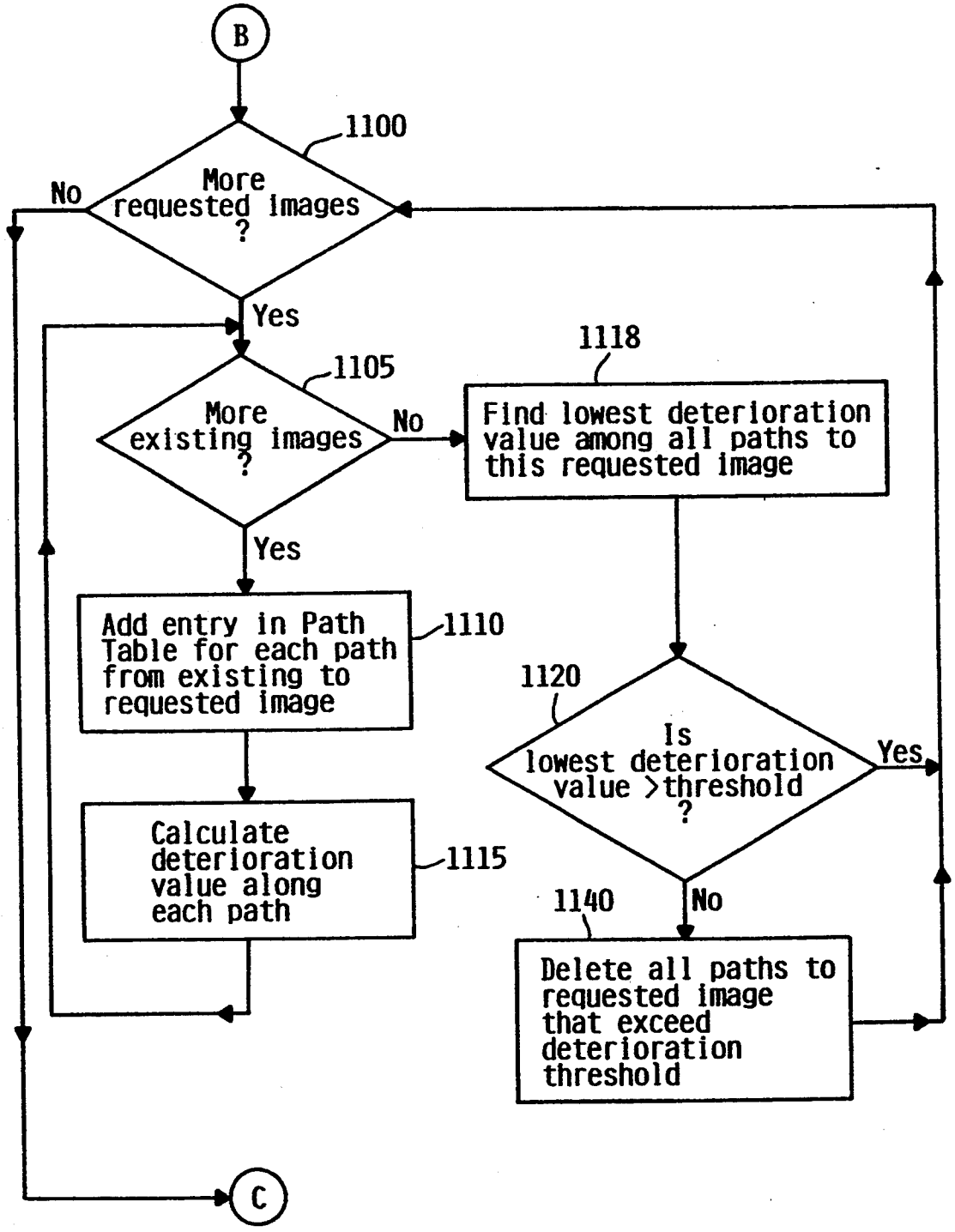
B
1100
More requested images ?
No
Yes
1105
More existing images ?
No
Yes
1118
Find lowest deterioration value among all paths to this requested image
Add entry in Path Table for each path from existing to requested image
1110
1120
Is lowest deterioration value >threshold ?
Yes
Calculate deterioration value along each path
1115
1140
No
Delete all paths to requested image that exceed deterioration threshold
C

FIG. 7B-I

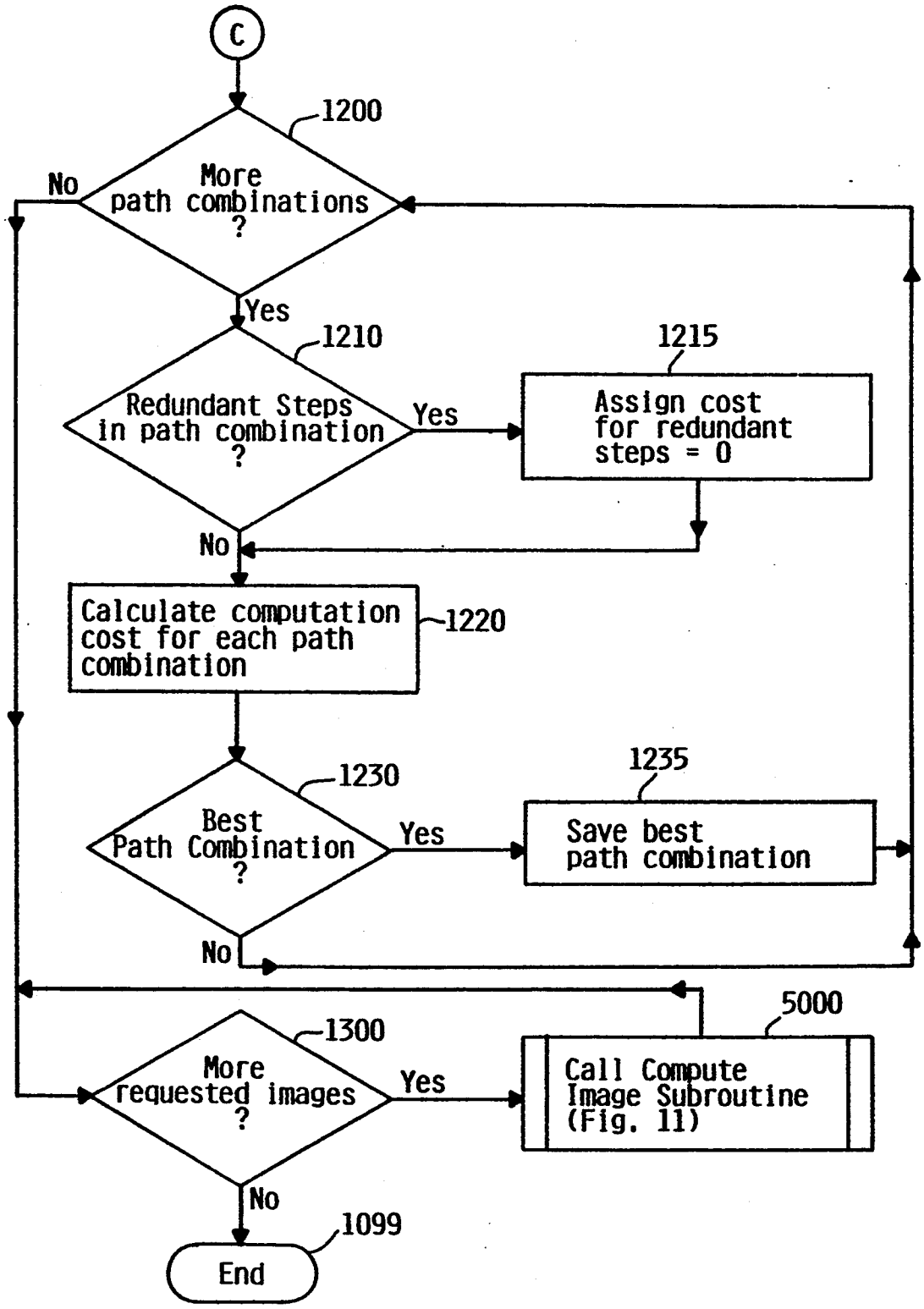
C
1200
More path combinations ?
No
Yes
1210
Redundant Steps in path combination ?
Yes
1215
Assign cost for redundant steps = 0
No
Calculate computation cost for each path combination
1220
1230
Best Path Combination ?
Yes
1235
Save best path combination
No
1300
More requested images ?
Yes
5000
Call Compute Image Subroutine (Fig. 11)
No
1099
End

FIG. 7B-2

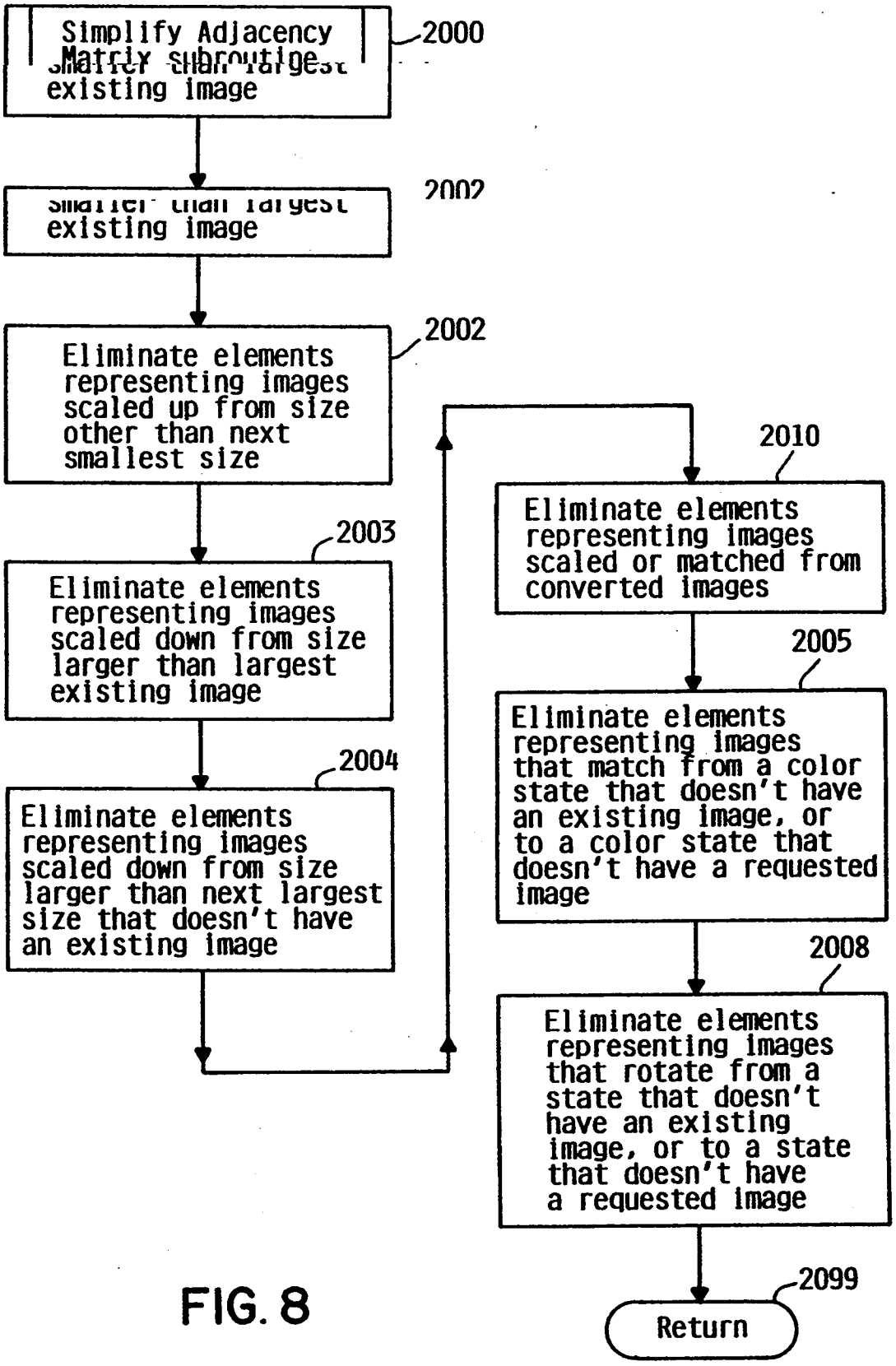
Simplify Adjacency Matrix subroutine
2000
existing image
2002
Eliminate elements representing images scaled up from size other than next smallest size
2003
Eliminate elements representing images scaled down from size larger than largest existing image
2004
Eliminate elements representing images scaled down from size larger than next largest size that doesn't have an existing image
2010
Eliminate elements representing images scaled or matched from converted images
2005
Eliminate elements representing images that match from a color state that doesn't have an existing image, or to a color state that doesn't have a requested image
2008
Eliminate elements representing images that rotate from a state that doesn't have an existing image, or to a state that doesn't have a requested image
2099
Return

FIG. 8

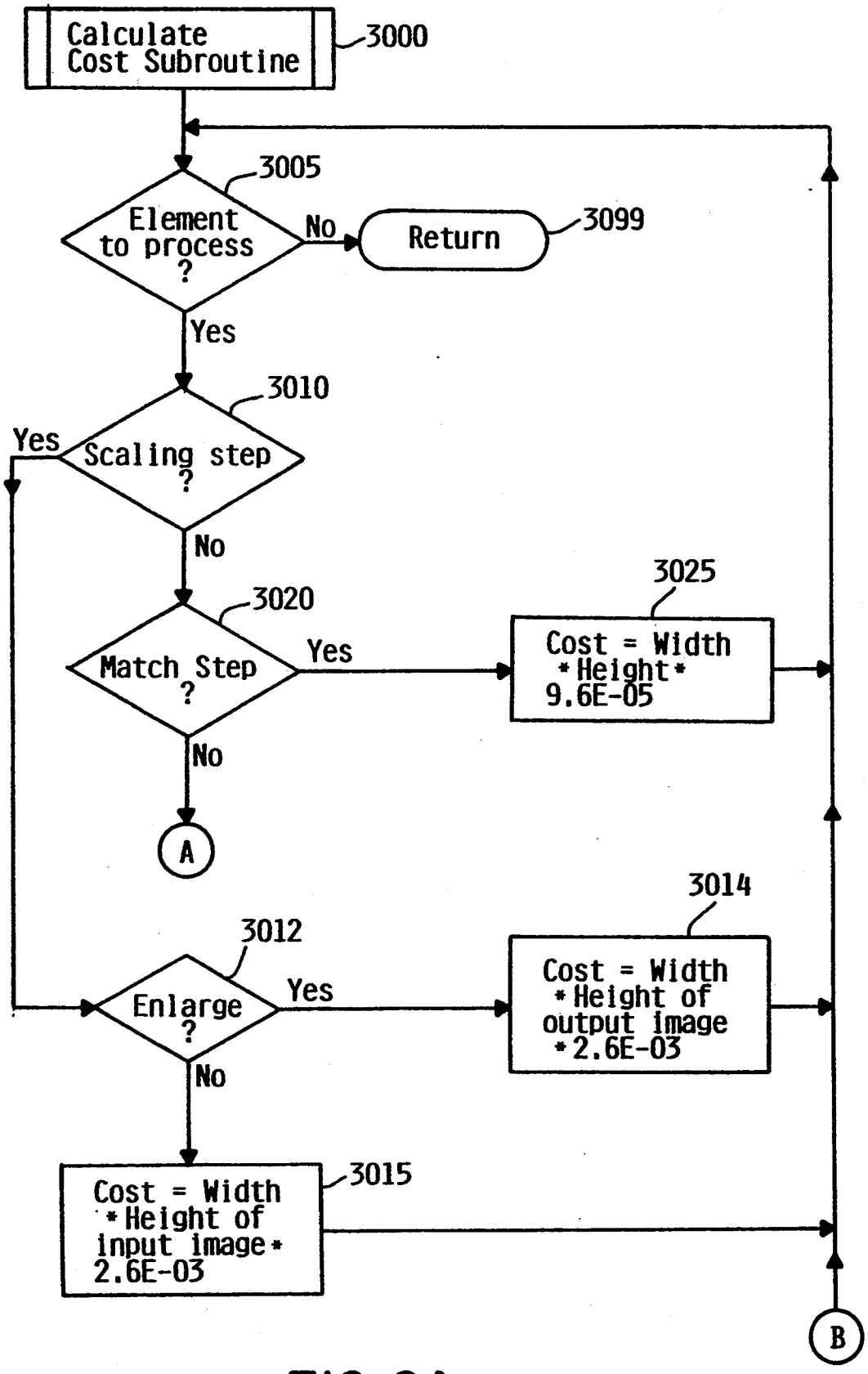
Calculate Cost Subroutine
3000
3005
Element to process ?
No
Return
3099
Yes
3010
Yes
Scaling step ?
No
3020
Match Step ?
Yes
3025
Cost = Width *Height* 9.6E-05
No
A
3014
3012
Enlarge ?
Yes
Cost = Width *Height of output image *2.6E-03
No
Cost = Width *Height of input image* 2.6E-03
3015
B

FIG. 9A

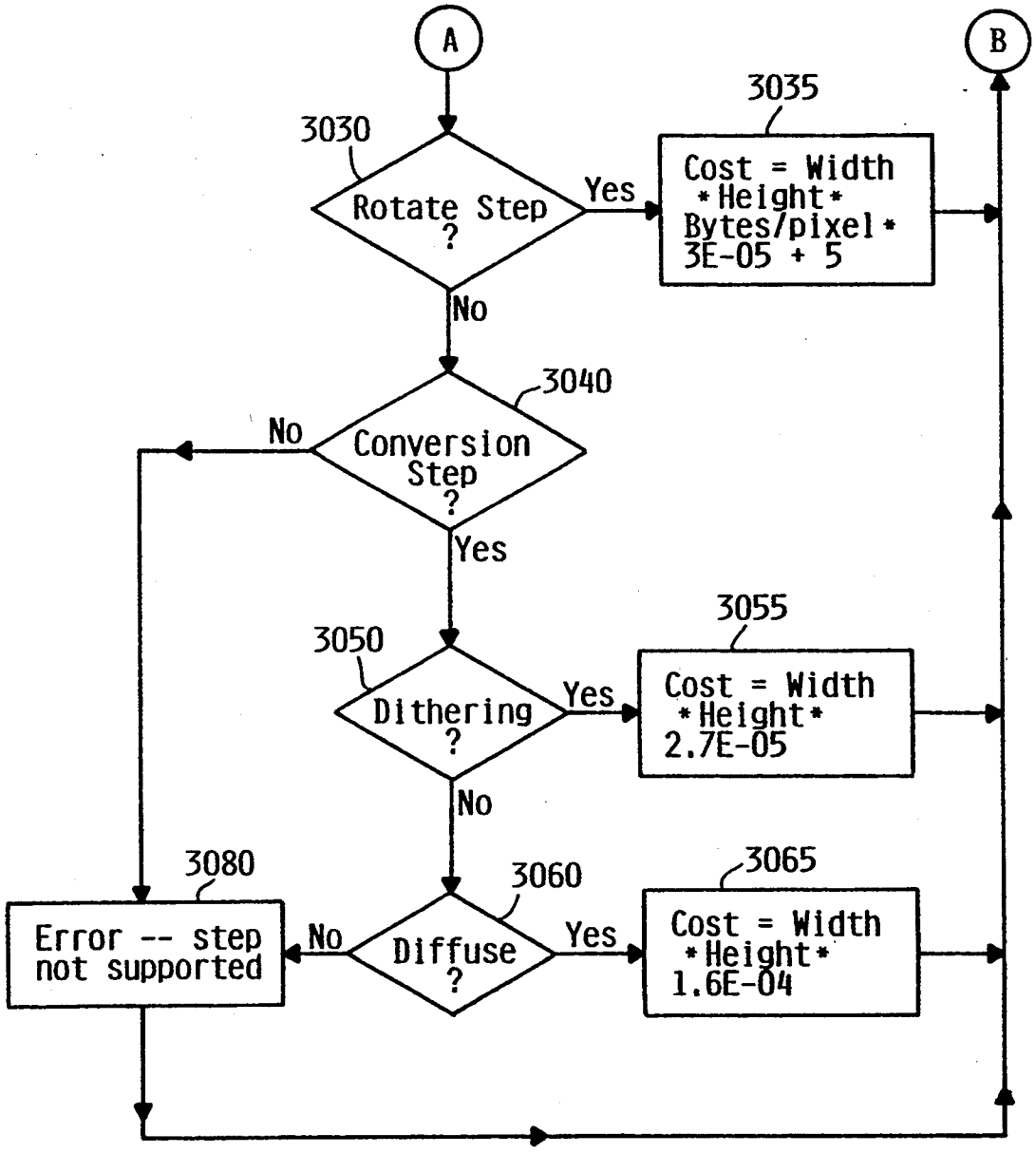
A
B
3030
Rotate Step ?
Yes
No
3035
Cost = Width *Height* Bytes/pixel* 3E-05 + 5
3040
Conversion Step ?
No
Yes
3050
Dithering ?
Yes
No
3055
Cost = Width *Height* 2.7E-05
3060
Diffuse ?
No
Yes
3065
Cost = Width *Height* 1.6E-04
3080
Error -- step not supported

FIG. 9B

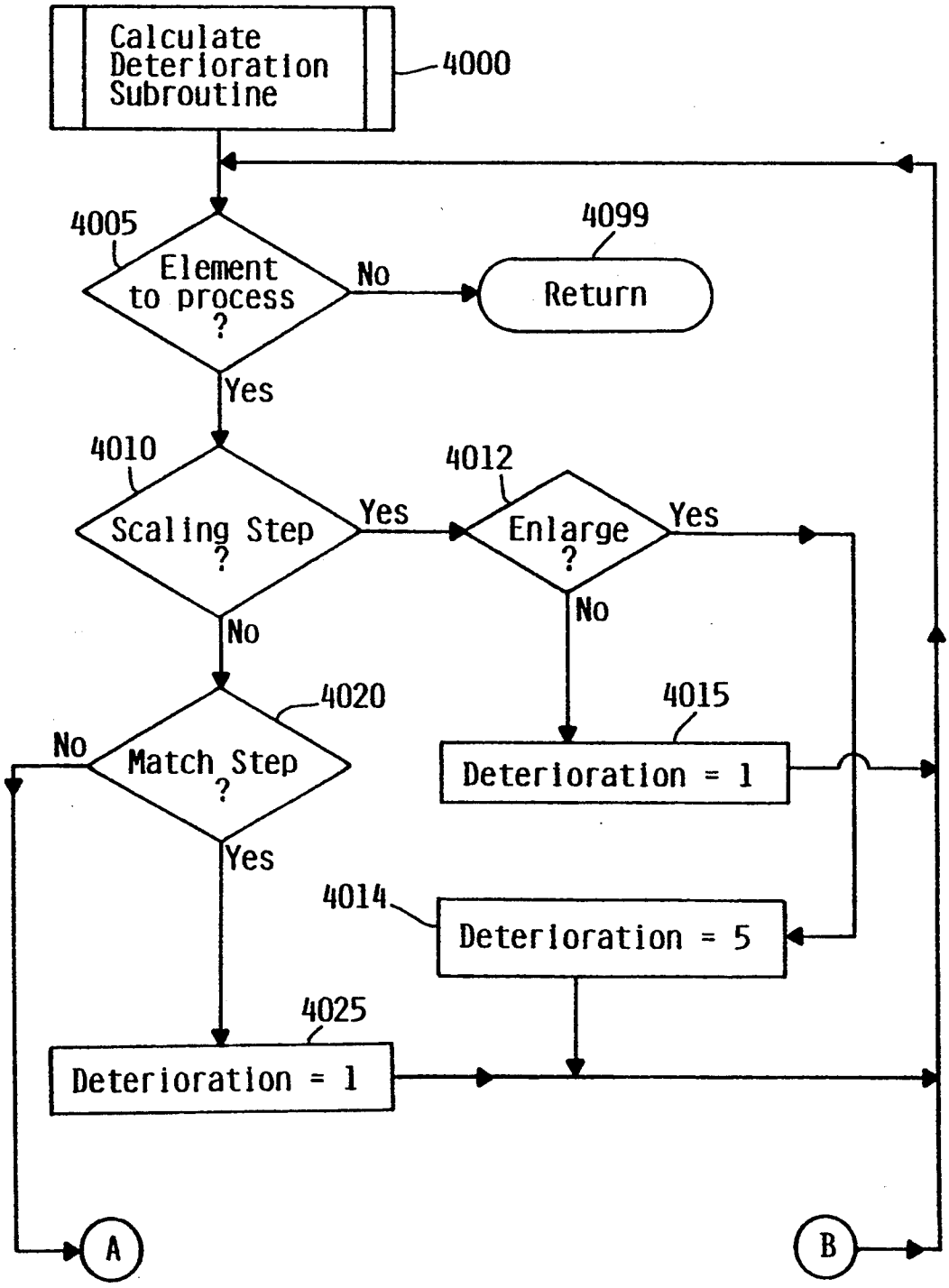
Calculate Deterioration Subroutine
4000
4005
Element to process ?
No
4099
Return
Yes
4010
Scaling Step ?
Yes
4012
Enlarge ?
Yes
No
No
4020
4015
No
Match Step ?
Deterioration = 1
Yes
4014
Deterioration = 5
4025
Deterioration = 1
A
B

FIG. 10A

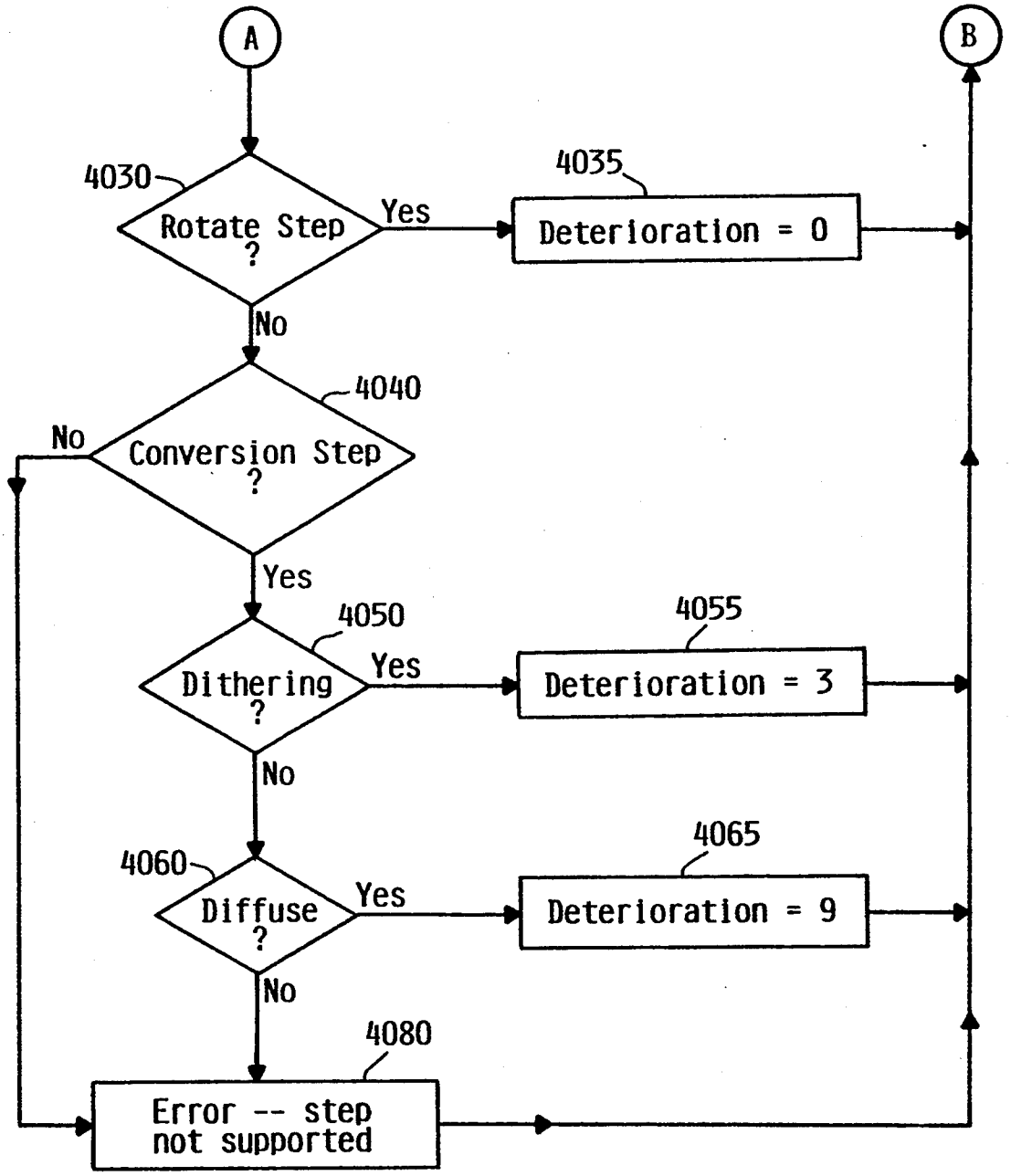
A
B
4030
Rotate Step ?
Yes
4035
Deterioration = 0
No
4040
No
Conversion Step ?
Yes
4050
Dithering ?
Yes
4055
Deterioration = 3
No
4060
Diffuse ?
Yes
4065
Deterioration = 9
No
4080
Error -- step not supported

FIG. 10B

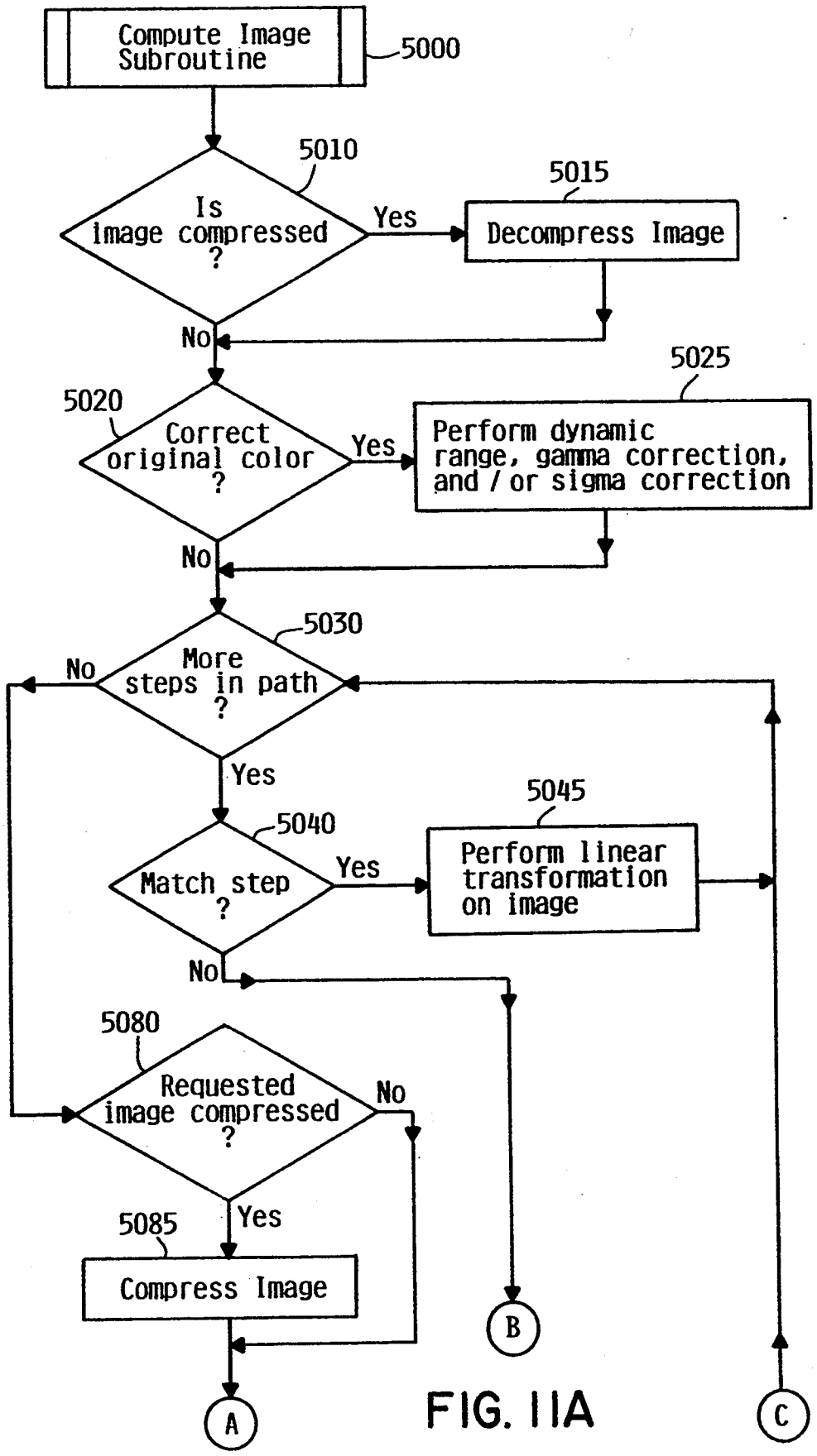
Compute Image Subroutine
5000
5010
Is image compressed ?
Yes
5015
Decompress Image
No
5020
Correct original color ?
Yes
5025
Perform dynamic range, gamma correction, and / or sigma correction
No
5030
More steps in path ?
No
Yes
5040
Match step ?
Yes
5045
Perform linear transformation on image
No
5080
Requested image compressed ?
No
Yes
5085
Compress Image
B
A
C

FIG. 11A

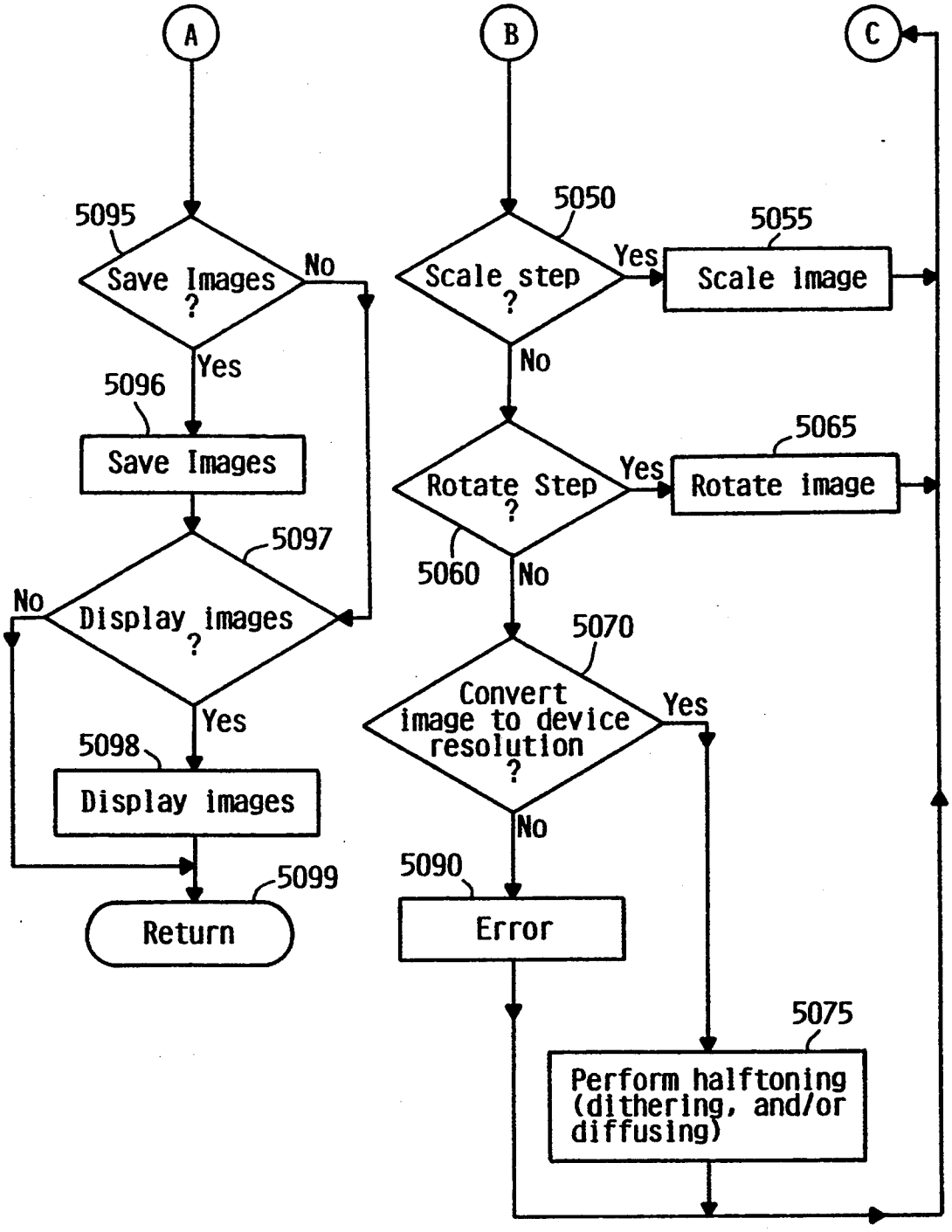
A
B
C
5095
Save Images ?
No
Yes
5096
Save Images
5097
Display images ?
No
Yes
5098
Display images
5099
Return
5050
Scale step ?
Yes
5055
Scale image
No
5065
Rotate Step ?
Yes
Rotate image
5060
No
5070
Convert image to device resolution ?
Yes
No
5090
Error
5075
Perform halftoning (dithering, and/or diffusing)

FIG. 11B

REQUEST IMAGE

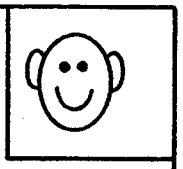

Image Height ========> 1024

Image Width ========> 768

Device ========> IBM 8514 Display

Orientation ========> Normal Viewing

Quality Threshold ========> 15

Save Requested Image ======> Y

Save Intermediate Images ==> N

Display Requested Images ==> Y

Gamma Correction ========> 1.4

Sigma Correction ========> 10

Dynamic Range Adjust ======> Y

F6 = Send all requests F10 = Request Another Image

FIG. 12

METHOD AND APPARATUS FOR THE EFFICIENT GENERATION OF HIGH QUALITY IMAGES IN A COMPUTER SYSTEM UTILIZING AN INTERCONNECTED IMAGE STATE TABLE

FIELD OF THE INVENTION

This invention relates to the data processing field. More particularly, this invention relates to the efficient generation of high quality images in a computer system.

BACKGROUND OF THE INVENTION

General purpose computer systems of yesteryear were largely limited to the display of textual information. In fact, the early computer displays were incapable of displaying anything other than words, or crude drawings made from text related symbols commonly found on a keyboard, such as ":-)". While text and silly symbols were just fine for some people, many people with expressive personalities wanted the ability to display real graphics on their computer display. Gradually, computer displays started supporting graphics. Early graphics were displayed in what became known as "CGA mode" CGA mode divided the computer display up into rows of 640 pixels and columns of 200 pixels. While images displayed in CGA mode were relatively easy to generate and display since they did not require a tremendous amount of data, the resolution of an image displayed in CGA mode was grainy and only of marginal quality.

Users quickly became dissatisfied with the quality of CGA mode monitors, and began demanding something better. EGA mode increased the resolution of the image to 640×350 pixels, but users still weren't very happy.

When VGA mode increased the resolution to 640×480 pixels, users started to realize that their computers were now capable of displaying high quality images, either still or animated. This realization opened up a whole new computer market now commonly (if imprecisely) known today as "multimedia" . Images of near photographic quality are now finding their way onto CD-ROM collections of images relating to a particular subject matter, and into application programs themselves, such as multimedia encyclopedias.

Technology marched on, and monitors supporting SVGA mode (768×1024 pixels) are now commonly available. Users have fallen in love with the power and pizzazz of multimedia, and want to display as many images as possible. The problem is that an SVGA image takes up a tremendous amount of storage space, and can take a considerable amount of computer processing power to generate. It is not uncommon for even high powered computers to take several seconds or even minutes to generate a single image. Many users find this response time unacceptable, since they are used to subsecond response time commonly achieved in the much simpler world of text processing. Storing every image the user could possibly want to display on a high speed storage medium would be nice in theory, but lacks practicability due to the multitude of ways a single image can be displayed (rotated, scaled, reverse image, etc), to the variation in the capabilities of individual displays, and to the massive amount of storage required to even contemplate such a thing.

For now, users feel a sense of frustration. They see that this amazingly powerful multimedia technology is just outside their grasp, due to the inefficient manner in which high quality images are currently being generated. This failure has resulted in a shared hesitancy among both users and application developers to fully adopt and embrace this new technology.

SUMMARY OF THE INVENTION

It is a principle object of the invention to efficiently generate high quality images in a computer system.

These and other objects are accomplished by the method and apparatus for the efficient generation of high quality images in a computer system disclosed herein.

A method and apparatus for the efficient generation of high quality images in a computer system is disclosed. A user requests that one or more images be generated. Representation of each requested image and any images that already have been generated and stored are added to an image table. Representations of a group of intermediate images are then added to the image table. Each intermediate image corresponds to a change of an image state between an existing image and a requested image. For example, if a requested image is smaller than an existing image, the scaling of the existing image is a change of image state and will result in the addition of the representation of an intermediate image to the image table. Note that the intermediate image itself is not actually computed or generated at this time.

After the representation of each intermediate image has been added to the image table, image paths are built from any existing image to any requested image. An image path includes an existing image, a series of one or more intermediate images, and a requested image. After a network of all the image paths are built, a "cost" of computing the image is calculated for each image path. After these calculations are complete, an optimal image path is selected. The requested image is then generated in a manner determined by the optimal image path. If more than one image is requested, the optimal image path for each requested image is determined by looking at combinations of image paths so that intermediate images generated for one requested image can be used by other requested images.

BRIEF DESCRIPTION OF THE DRAWING

FIG. **1** shows a block diagram of the computer system of the invention.

FIG. **2** shows a prior art method of generating a series of images

FIG. **3** shows a simplified representation of the generation of a series of images using the method of the invention.

FIGS. **4A–4C** show a more detailed representation of the generation of a series of images using the method of the invention. FIGS. **5A–5J** show tables defining parameters used in practicing of the invention.

FIGS. **6A–6B** show the matrices of image cost and deterioration of the invention.

FIGS. **7A–7B**, and **8–11** show the flowcharts of the invention.

FIG. **12** shows an exemplary display screen of the invention.

DESCRIPTION OF THE PREFERRED EMBODIMENT

FIG. **1** shows a block diagram of computer system **100** of the invention. Computer system **100** has display **170**, keyboard **180**, and input device **190**, each of which is connected to system unit **110**. System unit **110** con-

tains processor **120** connected to memory **140**, storage **130**, and display adapter **160**. Processor **120** is suitably programmed to carry out this invention, as described in more detail in the flowcharts of FIGS. **7–11**. Memory **140** contains matrices **141**, tables **142**, operating system **143**, image midware **144**, and one or more image applications **145**. Storage **130** contains existing images **131**.

In the preferred embodiment, computer system **100** is an IBM PS/2, where processor **120** is an Intel 80486DX microprocessor. Display adapter **160** is an IBM SVGA display adapter, and display **170** is an IBM 8515 display. Input device **190** is preferably an IBM mouse but may also be a track ball, light pen, or other input device. Storage **130** is preferably a conventional magnetic storage device, but could also be a read/write optical device, tape device, or other high speed storage device. Operating system **143** is preferably OS/2 2.0 with Presentation Manager, but could be Microsoft Windows 3.1, or another operating system. Tables **142** are shown in more detail in FIG. **5**. Matrices **141** are shown in more detail in FIG. **6**. Image midware **144** is a software program suitably programmed to cause processor **120** to execute the flowcharts of FIG. **7–11**. Image applications **145** use image midware **144** to generate images used by the application program.

Computer system **100** could also be another type of computer system, whether it be another microcomputer such as an Apple Macintosh, a minicomputer such as an IBM AS/400, or a mainframe computer such as an IBM System/390, and still fall within the spirit and scope of this invention. In addition, computer system **100** can be a microcomputer such as described above, connected to a larger computer system such as an IBM AS/400. If connected to a larger system, processor **120** may share responsibilities for executing the flowchart of FIGS. **7–11** with one or more other processors (not shown) contained in the larger system. Storage **130** and/or memory **140** could also be distributed to other systems connected to computer system **100**.

FIG. **2** shows a prior art method of generating a series of images. Image **200** is an existing compressed image. High quality images **250**, **260**, and **270** are to be generated from this compressed image. In order to generate high quality image **250**, image **200** must first be decompressed, corrected to the original color (also known as dynamic range adjust, input gamma correct, and/or sigma correct), scaled to the correct size, matched to the color of the display (also known as linear transformation), converted to the resolution of the display (also known as halftoning, dithering, and/or diffusing), and rotated. After image **250** is generated, temporary images **210–214** are discarded.

Generating image **260** again requires that compressed image **200** be decompressed, scaled to the correct size, corrected to the original color, matched to the color of the display, converted to the resolution of the display, and rotated. The process is repeated to generate image **270**. The generation of images **250**, **260**, and **270** using prior art techniques requires the execution of eighteen highly computational intensive steps.

FIG. **3** shows a simplified representation of the generation of a series of images using the method of the invention. Image **300** is an existing compressed image. High quality images **350**, **360**, and **370** are to be generated from this compressed image. In order to generate high quality image **350**, image **300** must, like the prior art method described above, first be decompressed, scaled to the correct size, corrected to the original color, matched to the color of the display, converted to the resolution of the display, and rotated. Those skilled in the art will appreciate that while it may be possible to leave out some of these steps in a particular implementation, a high quality image of the desired size and orientation requires these or similar steps. Images **310–314** are not temporary images like the prior art, but are instead intermediate images that are not discarded until after images **350**, **360**, and **370** are all created, and may even be optionally saved after this time as well. Requested image **360** is not created from compressed image **300** as in the prior art, but instead is created from intermediate image **312**. Intermediate image **312** is scaled, matched to the color of the display, converted to the resolution of the display, and rotated. Intermediate images **322–324** are created in the process of generating requested image **360**. Since image **360** has been prepared for a different device than image **350**, intermediate images **313** and **314** could not have been used to prepare image **360**.

Requested image **370** is not created from compressed image **300** as in the prior art, but instead is created from intermediate image **323**. Intermediate image **323** is scaled, converted to the resolution of the display, and rotated. Intermediate images **333–334** are created in the process of generating requested image **370**. Although image **370** has been prepared for the same device as image **360**, and intermediate image **324** could have been used to generate image **370** instead of intermediate image **323**, the preferred embodiment does not use this intermediate image, since scaling an image that has already been converted to the resolution of a device yields poor quality. The generation of images **350**, **360**, and **370** in the preferred embodiment requires the execution of thirteen highly computational intensive steps, five fewer steps than was required in the prior art generation of images **250**, **260** and **270**. This reduction of these steps resulted in much faster processing time, without sacrificing image quality.

FIGS. **4A–4C** show a more complex representation of the generation of a series of images using the method of the invention. FIG. **4A** shows existing images **0** and **25**, which have already been generated and stored and requested images **11**, **20**, **30**, and **40**. The remainder of the images are representations of intermediate images that could be generated, if chosen as part of an optimal path, to produce the requested images. Note that the Y axis of FIG. **4A** indicates scaling, the Z axis indicates rotation, and the X axis indicates the rest of the image operations (correct, match, convert) for two different devices.

Each image shown in FIG. **4A** represents an image state. As will be described in more detail later, the invention forms a logical connection between each image state that differs from another image state by one operation. For example, image **7** is logically connected to image **37**, since image **7** could be scaled to image **37** in one step. It is important to realize at this stage that only image **0** and image **25** actually exist—the requested images have not been generated yet, and the intermediate images will only be generated if the invention determines that they are in an optimal image path.

FIG. **4B** shows the image states of FIG. **4A** after the invention performs a simplification operation on the logical connections between the image states. Logical connections determined to be the result of an inefficient operation have been deleted. For example, although it is true that image **7** could be scaled to image **37** in one step, this is not an efficient operation. Therefore, the

connection between images 7 and 37 has been deleted in Fig. 4B. This simplification operation will be explained in more detail later when FIG. 8 is discussed.

FIG. 4C shows the image states of FIG. 4A after the invention has determined the optimal paths to requested images 11, 20, 30, and 40. These paths were determined by forming combinations of paths from existing images to requested images shown in FIG. 4B, and calculating a computational cost for each path combination to determine the best path combination. The optimal path to requested image 11 includes images 0, 1, 2, 3, 6, and 11. The optimal path to requested image 20 includes images 2, 12, 14, 15, and 20. The optimal path to requested image 30 includes images 25 and 30. The optimal path to requested image 40 includes images 14, 34, 35, and 40. After the optimal paths are established, the invention generates requested images 11, 20, 30, and 40 along the optimal paths shown in FIG. 4C. For example, image 20 is generated by scaling intermediate image 2 (resulting in intermediate image 12), matching the color to the second device (resulting in intermediate image 14), converting to the resolution of the second device (resulting in intermediate image 15) and rotating to the orientation desired for requested image 20.

FIGS. 5A–5I show the tables of the invention. Each of these tables is used by the flowcharts of FIGS. 7–11, and will be discussed in more detail later. FIG. 5A shows the Scale State Table. This table keeps track of the unique sizes of the requested images.

FIG. 5B shows the Rotation State Table. This table keeps track of the unique orientations of the requested images. The orientation can be expressed textually, as is shown here, or can use any other representation, such as the TIFF 1–8 representation for orientation known in the art.

FIG. 5C shows the Match State table. Column 510 of this table contains a Color Matrix ID, and refers to a 3×3 color transformation matrix, such as that shown in FIG. 5G. The color matrix converts XYZ values to the RGB tristimulus values of the device. The inverse matrix is multiplied by the linear RGB tristimulus values of a given device state to convert it to standard CIE XYZ tristimulus values. Column 520 contains an ID for a non-linear match table, such as that shown in FIG. 5H. This non-linear transformation table converts linear RGB data to non-linear data to compensate for the nonlinear distortion of a given device. The inverse table transforms the nonlinear data to linear. In the exemplary table in FIG. 5H, the input is a number from 0 to 255 (8 bits), which is used to index into the table which yields a number from 0 to 4095 (12-bits). Therefore this table has 256 values ranging from 0 to 4095. Its inverse table (not shown) would have 4096 values ranging from 0 to 255.

Column 525 of this table shows valid conversion states for each entry in the Match State Table. For example, for an image with a Match State of 3, a conversion state of 2 (i.e. Dither, FIG. 5D) would not be a valid conversion state, since only conversion states 1 and 3 are valid for match state 3.

FIG. 5D shows the Conversion State Table. This table keeps track of the unique conversion techniques used to convert an image to the resolution supported by the device, along with the bytes/pixel representations for the images. Column 530 contains an ID for a non-linear conversion table, such as those shown in FIGS. 5I–5J. FIG. 5I shows a palette normalized luminance table. There are 7 values for red, 8 for green and 4 for blue. The numbers represent the normalized luminance of the red, green and blue components of each palette entry. FIG. 5J shows a dither table. A dither table is a kind of nonlinear transformation table that converts linear data to non-linear device compensated data. It has as input a number from 0 to the maximum value for R, G, or B linear pixel data—in this example, from 0 to 4095. Its output ranges from 0 to the maximum input value to the D/A converters on the display adapter. The difference is that the dither table has not 1 value for each input value but some number greater than 1, where the position of the pixel within the image is used to select between the various output values for the same input value. The exemplary table in FIG. 5J shows 4096 possible input values, ranging from 0 to 4095. The output is one of 4 values for R, 4 values for G, or 4 values for B. The values in this case range from 0 to 31 for R and B, and 0 to 63 for G, since the display adapter takes 5 bits for red and blue and 6 bits for green.

FIG. 5E shows the image table of the invention. This table stores the representation of each existing, requested, and intermediate image. A value of "1" in column 550 indicates that the image exists. A value of "3" indicates an intermediate image, and a value of "2" indicates a requested image. Columns 561–564 refer to the specific row in the scale state table (FIG. 5A), the match state table (FIG. 5C), the rotate state table (FIG. 5B), and the conversion state table (FIG. 5D) that contains the unique value for this image. Column 570 indicates whether the image is compressed or not, and columns 581–583 indicates if various match techniques are used.

FIG. 5F shows the path table of the invention. This table keeps track of the paths found between existing images and requested images. Note that the image sequence stored for each path only includes images that involve a change of state, as represented by the four state tables (FIGS. 5A–5D). For example, path 610 does not include images 1 or 2 in the image sequence between images 0 and 3, since images 1 and 2 are at the same state (with respect to the four state tables) as image 0.

FIGS. 6A–6B show the matrices of the invention. Each of these matrices are used by the flowcharts of FIGS. 7–11, and will be discussed in more detail later. FIG. 6A shows the adjacency matrix of computation costs. There is a row and a column for every possible image. An element in the adjacency matrix represents a logical connection between two images that are one image state apart (i.e. can obtain the column image by performing one image calculation on the row image. This matrix is simplified by the flowchart of FIG. 8 to eliminate elements that represent an inefficient image calculation (such as scaling image 7 to obtain image 37 in FIG. 4A, as has been discussed). FIG. 6B is similar to FIG. 6A, but shows the adjacency matrix for the deterioration value. In the preferred embodiment, a deterioration value from 0–10 is assigned to each image calculation. "0" indicates no deterioration of the image. Since a rotated image does not deteriorate in quality, a value of 0 is assigned for this image calculation. Since a diffusion image calculation substantially deteriorates the image, a deterioration value of 9 is assigned. Note that image 1 and image 2 are not contained in either adjacency matrix since they have the same state as image 0, as has been discussed.

The tables and matrices shown in FIGS. 5A–5I and FIGS. 6A–6B are created by and used by the flowcharts of FIGS. 7–11 to build a network of image paths be-

tween one or more existing images and one or more requested images, and then choose an optimal path to each existing image based on computational cost, image deterioration, and/or other criteria. Once the optimal path is chosen, the requested image is calculated by performing the image calculation steps in the optimal path.

FIGS. 7A–7B, and 8–11 show the flowcharts of the invention. These flowcharts make up image midware **144** (FIG. **1**), and are executed on processor **120**. The flowchart of FIG. 7A is initiated when a user or application developer requests that one or more images be generated. In the preferred embodiment, users request the generation of images by inputting information into the screen shown in FIG. **12**. For the purposes of illustration, we will assume that images **0** and **25** (FIG. **4B**) already exist, and the user has requested that images **11**, **20**, **30**, and **40** be generated.

Block **1001** creates a Scale State Table for all existing and requested images, as is shown in FIG. **5A**. Block **1003** creates a Match State table for all existing and requested images, as is shown in FIG. **5C**. Block **1005** creates a Rotation State Table for all existing and requested images, as is shown in FIG. **5B**. Block **1008** creates a Conversion State Table for all existing and requested images, as is shown in FIG. **5D**. The data about the existing images used to create the tables in blocks **1001–1008** is normally stored as a header contained in the existing images themselves, stored as images **131** in storage **130** (FIG. **1**).

Block **1010** adds the representation of the existing and requested images to the image table, as shown in FIG. **5E**. Block **1015** removes any duplicate entries. For example, if image **25** both existed and was requested, block **1015** would remove the entry from the image table that requested this image.

Block **1030** looks to see if there are image state combinations that can be made between the existing images and the requested images. There is one image state combination for each image calculation step corresponding to a state table (FIGS. **5A–5D**) that can be made between existing images and requested images. For example, referring to FIG. **4B**, image **0** can be used to generate image **11** if it decompressed, corrected to the original color, matched, converted and rotated. Decompression and correction to the original color are not considered to be a change of state in the preferred embodiment, but the remaining three image calculation steps result in block **1030** finding three state combinations. Block **1030** actually finds many more than three state combinations in getting from image **0** to image **11**, since there are many other ways (some of them quite inefficient, but possible) to get from image **0** to image **11**.

For each state combination found in block **1030**, block **1040** asks if the representation of the intermediate image already exists in the image table (FIG. **5E**). If not, block **1045** adds the representation for this intermediate image into the image table, and flow of control loops back to block **1030**. Blocks **1030**, **1040**, and **1045** execute until all intermediate images are represented in the image table, at which point block **1030** is answered negatively and flow of control moves to block **1047**.

Block **1047** simplifies the Image Table by removing images if the conversion state is not valid. This is determined by comparing the valid conversion states in column **525** of the Match State Table with the state of the conversion in the Conversion Table. Those skilled in the art will appreciate that other rules for removing images could also be executed at this time.

Block **1050** creates the rows and columns for the adjacency matrices shown in FIG. **6A–6B**. As discussed above, there is a row and a column in each matrix for all possible images **0–41** that represent the four state tables. Images **1** and **2** are not present in the adjacency matrices, since they have the same states as image **0**. Simplify adjacency matrix subroutine **2000** of FIG. **8** is then called. This subroutine eliminates elements representing logical connections between image states determined to be the result of an inefficient operation. Block **2001** eliminates elements representing images scaled up from a size smaller than the largest existing image. Block **2002** eliminates elements representing images scaled up from a size other than the next smallest size. Block **2003** eliminates elements representing images scaled down from a size larger than the largest existing image. Block **2004** eliminates elements representing images scaled down from a size larger than the next largest size that doesn't have an existing image. Block **2010** eliminates elements representing images scaled or matched from converted images, since this creates poor quality images. Block **2005** eliminates elements representing images that match from a color state that doesn't have an existing image, or to a color state that doesn't have a requested image. Likewise, Block **2008** eliminates elements representing images that rotate from a state that doesn't have an existing image, or to a state that doesn't have a requested image. After all these elements are eliminated, the subroutine returns in block **2099** to block **1060** in FIG. 7A. Those skilled in the art will appreciate that more or less steps could be performed in this subroutine, depending on the designer's particular requirements, and still fall within the spirit and scope of this invention.

Block **1060** assigns an element in both the cost and deterioration adjacency matrices for each connection between images that survived the elimination operations performed by subroutine **2000**, and then calls calculate cost subroutine **3000** of FIG. **9**.

Referring now to FIG. **9**, block **3005** checks to see if there is an element to process in the cost adjacency matrix. If so, block **3010** asks if this element represents a scaling image calculation step. If so, block **3012** asks if this scaling step enlarges the image. If so, block **3014** assigns a cost equal to the width times the height of the output (i.e. scaled) image, times 2.6×10^{-03}. If block **3012** is answered negatively, block **3015** assigns a cost equal to the width times the height of the input (i.e. pre-scaled) image, times 2.6×10^{-03}. In either event, flow of control returns to block **3005**. Those skilled in the art will appreciate that the value selected for cost of this and subsequent image calculation steps is a design choice that can be modified and still fall within this invention. Calculation speed, processor utilization, storage utilization, etc., are factors used to determine cost values.

If block **3010** is answered negatively, block **3020** asks if this element represents a match image calculation step. If so, block **3025** assigns a cost equal to the width of the image times the height of the image, times 9.6×10^{-05}. Flow of control returns to block **3005**.

If block **3020** is answered negatively, block **3030** asks if this element represents a rotate image calculation step. If so, block **3035** assigns a cost equal to the width of the image times the height of the image, time the bytes/pixel of the image (found in the conversion state

table, FIG. 5D), times 3×10^{-05}, plus 5. Flow of control returns to block **3005**.

If block **3030** is answered negatively, block **3040** asks if this element represents a conversion image calculation step. If so, block **3050** asks if it is a dithering conversion step. If so, block **3055** assigns a cost equal to the width of the image times the height of the image, times 2.7×10^{-05}. Flow of control returns to block **3005**.

If block **3050** is answered negatively, block **3060** asks if this element represents a diffusion conversion image calculation step. If so, block **3065** assigns a cost equal to the width of the image times the height of the image, times 1.6×10^{-04}. Flow of control returns to block **3005**. If blocks **3040** or **3060** are answered negatively, an error has occurred, and block **3080** posts an error message. After block **3005** has processed all the elements in the cost adjacency matrix (after simplification), the subroutine returns in block **3099** to block **1070** in FIG. 7A.

Referring again to FIG. 7A, block **1070** fills in the adjacency matrix for cost for each assigned element determined by subroutine **3000**, as is shown in FIG. 6A, and calls calculate deterioration subroutine **4000** in FIG. **10**.

Referring now to FIG. **10**, block **4005** checks to see if there is an element to process in the deterioration adjacency matrix. If so, block **4010** asks if this element represents a scaling image calculation step. If so, block **4012** asks if this scaling step enlarges the image. If so, block **4014** assigns a deterioration value =5. If block **4012** is answered negatively, block **4015** assigns a deterioration value equal to 1. In either event, Flow of control returns to block **4005**. Those skilled in the art will appreciate that the value selected for deterioration value of this and subsequent image calculation steps is a design choice that can be modified and still fall within this invention.

If block **4010** is answered negatively, block **4020** asks if this element represents a match image calculation step. If so, block **4025** assigns a deterioration value equal to 1. Flow of control returns to block **4005**.

If block **4020** is answered negatively, block **4030** asks if this element represents a rotate image calculation step. If so, block **4035** assigns a deterioration value equal to 0 . Flow of control returns to block **4005**.

If block **4030** is answered negatively, block **4040** asks if this element represents a conversion image calculation step. If so, block **4050** asks if it is a dithering conversion step. If so, block **4055** assigns a deterioration value equal to 3. Flow of control returns to block **4005**.

If block **4050** is answered negatively, block **4060** asks if this element represents a diffusion conversion image calculation step. If so, block **4065** assigns a deterioration value equal to 9. Flow of control returns to block **4005**. If blocks **4040** or **4060** are answered negatively, an error has occurred, and block **4080** posts an error message. After block **4005** has processed all the elements in the deterioration value adjacency matrix (after simplification), the subroutine returns in block **4099** to block **1080** in FIG. 7A.

Block **1080** assigns an element in the deterioration adjacency matrix for each connection between images that survived the elimination operations performed by subroutine **2000**, and flow of control moves to block **1100** of FIG. 7B.

Referring now to FIG. 7B, block **1100** asks if there are more requested images to process. If so, block **1105** asks if there are more existing images to process. If so, block **1110** adds an entry in the path table (FIG. 5F) for each path found from this existing image to this requested image. This is done by taking each branch of the tree formed in the adjacency matrix between the existing image and the requested image. For example, the first path found to requested image **11** from existing image **0** is through image sequence **0**, **7**, **8**, and **11** (see FIG. 4B).

Once all path entries have been determined, block **1115** adds up the deterioration values from the deterioration adjacency matrix for each path entry in this path, and stores this information in the path table. The deterioration value for existing images is stored in the header associated with the image, and is included in this calculation. Flow of control loops back to block **1005** to look for more existing images to match to this requested image. If more existing images are found, additional paths are added to the path table by looping through blocks **1005**, **1110**, and **1115**.

Once block **1105** is answered negatively, block **1118** finds the path with the lowest deterioration value among all paths found to this requested image. This is done by looking at the total deterioration value for each path stored in the path table. Block **1120** asks if this path with the lowest deterioration value exceeds a deterioration threshold. This threshold can be specified by the user, such as is done in the screen of FIG. **12**, or be preset and hardcoded into block **1120**. The deterioration threshold indicates a minimum level of acceptable image quality. If the path with the lowest deterioration threshold does not exceed the deterioration threshold, at least one path exists that meets the quality requirements determined by the deterioration threshold. Block **1120** is answered negatively, and block **1140** deletes all paths to the requested image from the path table that exceed the deterioration threshold. If block **1120** is answered affirmatively, no paths meet the quality requirements, so none are deleted. In either event, flow of control returns to block **1100** to look for another requested image. Once all requested images have been processed, block **1100** is answered negatively, and flow of control moves to block **1200**.

Block **1200** looks to see if combinations can be made between paths for each image. For example, block **1200** first discovers that paths **1** of images **11**, **20**, **30**, and **40** (FIG. 5F) form one path combination. Block **1210** checks to see if there are any redundant steps in the path combination. Since our current path combination has a redundant step in the image sequence **0–12**, block **1210** is answered affirmatively, and block **1215** assigns a cost for each of the redundant steps =0. Block **1220** then calculates the computation cost for each path combination. This is done by summing the cost value from the cost adjacency matrix for each image sequence in the combined path, keeping in mind that redundant steps identified in blocks **1210–1215** have a cost of 0.

Block **1230** asks if this path is the best path combination found so far. Since it is the first path combination found so far, block **1230** is answered affirmatively, and block **1235** saves this best path combination. Flow of control loops back to block **1200** to look for more path combinations. Blocks **1200–1235** are executed repeatedly, looking for the best path combination. When all path combinations are exhausted, block **1200** is answered negatively, and the paths that make up the best path combination last saved in block **1235** are considered to be the optimal paths. In our example of FIG. 4B and FIG. 5F, paths **610**, **620**, **630**, and **640** are deter-

mined to be the optimal paths to images **11**, **20**, **30**, and **40**, respectively.

Once the optimal paths are determined, it is time to actually compute the requested images, by performing each image calculation step along the optimal path from the existing image to the requested image. It is important to note that the each individual image calculation used by this invention is itself a conventional technique well known to those skilled in the art. The following are exemplary references publicly known to those of skill in the art that describe one or more image calculation steps:

1. G. Goertzel and G. R. Thompson, "'Halftoning' Techniques for Displaying Images with a Limited Color Palette," Electronic Imaging West '90, Pasadena, Calif.
2. Fred Mintzer and John D. McFall, "Organization of a system for managing the text and images that describe an art collection," Proceedings of the "Image Handling and Reproduction Systems Conference" of the 1991 IS&T International Symposium on Electronic Imaging, San Jose, 26 Feb. 1991.
3. H. R. Delp, G. Goertzel, J. C. Lee, F. C. Mintzer, G. R. Thompson, H. S. Wong, "Color Properties and Color Calibration for a High-performance, High-Fidelity Color Scanner," Proceedings of the "Symposium on Electronic Photograph" of the IS&T's 44th Annual Conference, **12–17** May, 1991.
4. Two-Dimensional Signal and Image Processing, Jae S. Lim, Prentice Hall, 1990, Chapter 8 "Image Enhancement" has a section on Contrast and Dynamic Range modification that is the general technique of correcting the original. Chapter 4 has general techniques related to scaling. ISBN 0-13-935322-4.

Block **1300** checks to see if there are any more requested images to compute. If so, compute image subroutine **5000** of FIG. **11** is called. Referring now to FIG. **11**, block **5010** checks column **570** in the image table (FIG. 5E) to see if the image is compressed. If so, block **5015** decompresses the image in a conventional manner. In either event, block **5020** then checks to see if the original color of the image needs to be corrected by looking at columns **581–583** in the image table (FIG. 5E). If so, the correction of the original color is performed using the conventional match techniques of dynamic range, gamma correction, and/or sigma correction. In either event, block **5030** checks to see if there are more steps in the optimal path. If so, block **5040** checks to see if the step in the optimal path is a match step. If so, block **5045** performs a conventional match transformation (i.e. linear transformation) computation, and loops back to block **5030**.

If block **5040** is answered negatively, block **5050** checks to see if the step in the path is a scale step. If so, block **5055** scales the image in a conventional manner, and loops back to block **5030**. If block **5050** is answered negatively, block **5060** checks to see if the step in the path is a rotate step. If so, block **5065** rotates the image in a conventional manner, and loops back to block **5030**. If block **5060** is answered negatively, block **5070** checks to see if the step in the path is a conversion step. If so, block **5075** performs halftoning (i.e. dithering, error-diffusing) on the image in a conventional manner, and loops back to block **5030**.

If block **5070** is answered negatively, block **5090** posts an error condition for this step and loops back to block **5030**. Once all the image calculation steps in the optimal path have been performed, block **5030** is answered negatively, and block **5080** checks the image table to see if the requested image is compressed. If so, block **5085** compresses the image in a conventional manner. In either event, block **5095** determines whether the existing and/or intermediate images are to be saved. If so, the images are saved to image storage area **131** (FIG. **1**) in block **5096**. Block **5097** then checks to see if the images should be displayed. If so, the image(s) are displayed in block **5098** on display **170** (FIG. **1**). In either event, the subroutine returns in block **5099** to block **1300** in FIG. 7B. Once all images have been calculated, the program ends in block **1099**.

An alternate embodiment has been contemplated that simplifies the method and apparatus disclosed in the preferred embodiment. In this alternate embodiment, the image path network is built by using simplifying rules which order the image calculation steps according to cost. In this embodiment, the path table is replaced by a tree structure, where various image calculation steps are branches in the tree. The adjacency matrices are replaced by rules.

In this alternate embodiment, all requested images are associated with the best and most economical existing image in a simple tree structure, with one root (existing image) and many equal leaves (the requested images). For example, each requested image might be attached to the smallest existing image larger than itself. All images from the branch point are then sorted and grouped according to the image state that has the highest image calculation cost (e. g. scaling). For each group, an intermediate image is created to be the node of the group of images and is inserted into the tree. Each sub group is then sorted and grouped by the image state with the next highest image calculation cost. An intermediate image is created and inserted to be the node for this group. These steps are repeated for each image state. The tree is then traversed, and additional intermediate images are added for image calculation steps which take more than one operation. The images would be created by executing the image calculation steps defined within the tree.

While this invention has been described with respect to the preferred and alternate embodiments, it will be understood by those skilled in the art that various changes in detail may be made therein without departing from the spirit, scope and teaching of the invention. For example, the number and type of image calculation steps performed is highly dependent on the requirements and resources of a particular application. Examples of other image calculation steps that could be performed are small angle rotation, preparation of images for printing as well as display, edge enhancement, and negative to positive conversion. The techniques for determining the cost and deterioration of image calculation are also highly dependent on the requirements and resources of a particular application, as are the techniques for simplifying the adjacency matrices and the image table. In addition, an image path network can be built using a variety of techniques beyond the tables and matrices of the preferred embodiment, and beyond the tree structure of the alternate embodiment. For example, the image path network could also be built using geometric techniques and exhaustive search techniques. Accordingly, the herein disclosed is to be limited only as specified in the following claims.

What is claimed is:

1. A method for the efficient generation of a first requested image and a second requested image from an existing image through a plurality of images states, wherein each image comprises a plurality of variable parameters and wherein each image state comprises an image having specified values for each of said variable parameters, said method comprising the machine executed steps of:

adding a representation of said first requested image to an image table;

adding a representation of said second requested image to an image table;

adding a representation of said existing image to said image table;

adding representations of a plurality of intermediate images to said image table, each of said representations of a plurality of intermediate images corresponding to a change of an image state between said existing image and said first or second requested images;

building a plurality of first image paths between said existing image and said first requested image,each image path comprising a computational step required for conversion of a selected image state to an alternate image state;

building a plurality of second image paths between said existing image and said second requested image;

combining image paths in said plurality of first image paths with image paths in said plurality of second image paths, resulting in a plurality of combined image paths;

calculating a computational complexity for each of said combined image paths;

choosing a first optimal image path between said existing image and said first requested image, and a second optimal image path between a second intermediate image and said second requested image, responsive to said calculating step, said first optimal image path including a first subset of intermediate images, said second optimal image path including a second subset of intermediate images;

generating said first requested image as determined by said first optimal image path; and

generating said second requested image as determined by said second optimal image path.

2. The method of claim 1, further comprising the step of:

displaying said first requested image on a computer display screen.

3. The method of claim 2, further comprising the step of:

saving said first requested image on a computer storage device.

4. The method of claim 3, further comprising the step of:

saving said first subset of intermediate images on said computer storage device.

5. The method of claim 1, further comprising the step of:

calculating an image deterioration value for said plurality of image paths;

eliminating any image path from said plurality of image paths that exceeds a threshold image deterioration value.

6. The method of claim 5, wherein said eliminating step is executed only if there is at least one image path that does not exceed said threshold image deterioration value.

7. The method of claim 1, wherein said building steps are optimized to exclude inefficient image paths.

8. The method of claim 1, wherein said generating said first requested image step further comprises the step of:

decompressing said existing image, resulting in a first intermediate image.

9. The method of claim 8, wherein said generating said first requested image step further comprises the step of:

scaling said first intermediate image, resulting in said second intermediate image.

10. The method of claim 9, wherein said generating said first requested image step further comprises the step of:

correcting the original color of said second intermediate image, resulting in a third intermediate image.

11. The method of claim 10, wherein said generating said first requested image step further comprises the step of:

matching the corrected color of said third intermediate image to the representation of color in a first device, resulting in a fourth intermediate image.

12. The method of claim 11, wherein said generating said first requested image step further comprises the step of:

converting said fourth intermediate image to a fifth intermediate image having a resolution supported by said first device.

13. The method of claim 12, wherein said generating said first requested image step further comprises the step of:

rotating the fifth intermediate image to an orientation of said first requested image, resulting in said first requested image.

14. The method of claim 13, wherein said generating said second requested image step further comprises the step of:

matching the corrected color of said third intermediate image to the representation of color in a second device, resulting in a sixth intermediate image.

15. The method of claim 14, wherein said generating said second requested image step further comprises the step of:

converting said sixth intermediate image to a seventh intermediate image having a resolution supported by said second device.

16. The method of claim 15, wherein said generating said second requested image step further comprises the step of:

rotating the sixth intermediate image to an orientation of said second requested image, resulting in said second requested image.

17. A method for the efficient generation of a requested image from an existing image through a plurality of images states, wherein each image comprises a plurality of variable parameters and wherein each image state comprises an image, having specified values for each of said variable parameters, said method comprising the machine executed steps of:

adding a representation of said requested image to an image table;

adding a representation of said existing image to said image table;

adding representations of a plurality of intermediate images to said image table, each of said representa-

tions of a plurality of intermediate images corresponding to a change of an image state between said existing image and said first requested image;

building a plurality of image paths between said existing image and said first requested image each image path comprising a computational step required for conversion of a selected image to an alternate image;

calculating a computational complexity for each of said plurality of image paths;

choosing an optimal image path between said existing image and said requested image responsive to said calculating step, said optimal image path including a first subset of intermediate images;

generating said requested image as determined by said optimal image path.

18. A method for the efficient generation of a requested image from an existing image, wherein each image comprises a plurality of variable parameters, said method comprising the machine executed steps of:

determining a plurality of intermediate images between said requested image and said existing image;

building an image path network of representations of a plurality of image paths from said requested image to said existing image, each image path comprising a computational step required for conversion Of a first image to an alternate image, said image path network including representations of a said plurality of intermediate images;

calculating a deterioration value for each of said plurality of image paths;

choosing an optimal image path between said existing image and said requested image responsive to said calculating step, said optimal image path including a first subset of intermediate images; and

generating said requested image as determined by said optimal image path.

19. A computer system for generating a requested image from an existing image, wherein each image comprises a plurality of variable parameters, said computer system comprising:

means for determining a plurality of intermediate images between said requested image and said existing image;

means for building an image path network of representations of a plurality of image paths from said requested image to said existing image, each image path comprising a computational step required for conversion of a selected image to an alternate image, said image path network including representations of said plurality of intermediate images;

means for calculating a computational complexity for each of said plurality of image paths;

means for choosing an optimal image path between said existing image and said requested image responsive to said calculating means, said optimal image path including a first subset of intermediate images; and

means for generating said requested image as determined by said optimal image path.

20. A method for the efficient generation of a requested image from an existing image, wherein each image comprises a plurality of variable parameters, said method comprising the machine executed steps of:

determining a plurality of intermediate images between said requested image and said existing image;

building an image path network of representations of a plurality of image paths from said requested image to said existing image, each image path comprising a computational step required for conversion of a selected image to an alternate image, said image path network including representations of said plurality of intermediate images;

calculating a deterioration value for each of said plurality of image paths;

choosing an optimal image path between said existing image and said requested image responsive to said calculating means, said optimal image path including a first subset of intermediate images; and

generating said requested image as determined by said optimal image path.

21. A computer system for generating a requested image from an existing image, wherein each image comprises a plurality of variable parameters, and wherein each image state comprises an image having specified values for each of said variable parameters, said computer system comprising:

means for adding a representation of said requested image to an image table;

means for adding a representation of said existing image to said image table;

means for adding representations of a plurality of intermediate images to said image table, each of said plurality of intermediate images corresponding to a change of an image state between said existing image and said first requested image;

means for building a plurality of image paths between said existing image and said first requested image, each image path comprising a computational step required for conversion of a selected image state to an alternate image state; means for calculating a computational complexity for each of said plurality of image paths;

means for choosing an optimal image path between said existing image and said requested image responsive to said calculating means, said optimal image path including a first subset of intermediate images; and

means for generating said requested image as determined by said optimal image path.

* * * * *