Trials@uspto.gov
571-272-7822

Paper 34
Entered: June 13, 2018

UNITED STATES PATENT AND TRADEMARK OFFICE

BEFORE THE PATENT TRIAL AND APPEAL BOARD

DAIMLER AG, DAIMLER NORTH AMERICA CORPORATION,
MERCEDES-BENZ USA, LLC, AND
MERCEDES-BENZ U.S. INTERNATIONAL, INC.,
Petitioner,

v.

STRAGENT, LLC,
Patent Owner.

Case IPR2017-00457
Patent 8,566,843 B2

Before LYNNE E. PETTIGREW, PATRICK M. BOUCHER, and CARL L. SILVERMAN, *Administrative Patent Judges*.

SILVERMAN, *Administrative Patent Judge*.

FINAL WRITTEN DECISION
35 U.S.C. § 318(a) and 37 C.F.R. § 42.73

BMW EXHIBIT 1016

I. INTRODUCTION

In response to a Petition (Paper 2, "Pet.") filed by Daimler North America Corporation, Mercedes-Benz USA, LLC, and Mercedes-Benz U.S. International, Inc. (collectively, "Petitioner"), we instituted an *inter partes* review of claims 1 and 47–51 of U.S. Patent No. 8,566,843 B2 ("the '843 patent"). Paper 12 ("Dec.").

During the trial, Stragent, LLC ("Patent Owner") timely filed a Response (Paper 14, "PO Resp."), to which Petitioner timely filed a Reply (Paper 23, "Reply"). An oral hearing was held on March 13, 2018, and a copy of the transcript was entered into the record. Paper 33 ("Tr.").[1]

We have jurisdiction under 35 U.S.C. § 6. This Decision is a Final Written Decision under 35 U.S.C. § 318(a) as to the patentability of the claims on which we instituted trial. Based on the record before us, Petitioner has shown, by a preponderance of the evidence, that claims 1 and 47–51 are unpatentable.

I. BACKGROUND

A. Real Parties in Interest and Related Matters

The real party-in-interest for Patent Owner is Stragent, LLC, the assignee of U.S. Patent No. 8,566,843. Paper 6.

The real parties-in-interest for Petitioner are Daimler AG, Daimler North America Corporation, Mercedes-Benz USA, LLC, and Mercedes-Benz U.S. International, Inc. Paper 2.

---

[1] The hearing was a consolidated hearing for IPR2017-00457 and IPR2017-00458.

IPR2017-00458, also filed by Petitioner, challenges claims of related U.S. Patent No. 8,209,705 B2 ("the '705 patent"), the application that issued as the '705 patent being the parent of the application that issued as the '843 patent.

The following *inter partes* reviews challenge claims of the '843 patent or the '705 patent: IPR2017-00676, IPR2017-00677, IPR2017-01502, IPR2017-01503, IPR2017-01504, IPR2017-01519, IPR2017-01520, IPR2017-01521, and IPR2017-01522.

Patent Owner has asserted the '843 patent in three separate suits: *Stragent, LLC, v. Mercedes-Benz USA, LLC*, No. 6:16-cv-00447 (E.D. Tex. May, 20, 2016); *Stragent, LLC v. BMW of North America, LLC*, Civ. No. 6:16-CV-00446 (E.D. Tex. May 20, 2016); and *Stragent, LLC v. Volvo Cars of North America, LLC*, Civ. No. 6:16-CV-00448 (E.D. Tex. May 20, 2016). Pet. 88; Paper. 6.

The '843 patent relates to sharing information in a distributed system. Ex. 1001, Abstract. Data between networks is shared using a common "bulletin board" memory. *Id*. The system includes at least two different networks, each of which is either a **C**ontroller **A**rea **N**etwork ("CAN"), a FlexRay network, or a **L**ocal **I**nterconnect **N**etwork ("LIN"). *Id*. at 3:24–33. The system described in the '843 patent may be used in "vehicle communication and control systems, real-time monitoring systems, industrial automation and control systems, as well as any other desired system." *Id*. at 1:22–25. An example is provided in Figure 1 of the '843 patent, which is reproduced below.

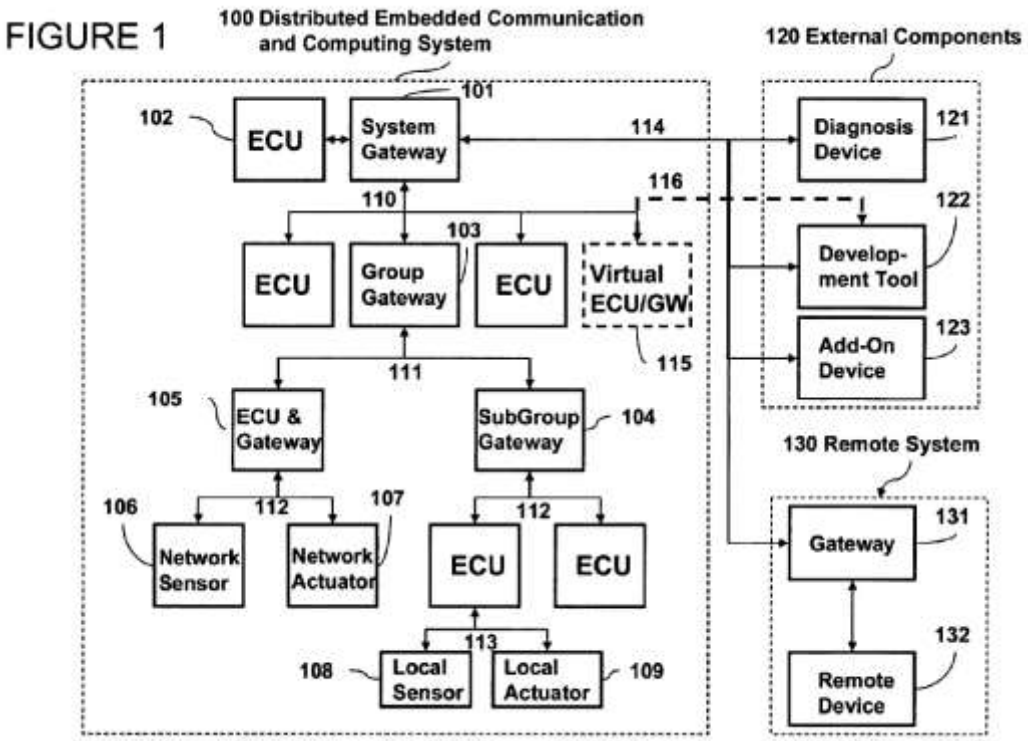

Figure 1 generally depicts elements of a distributed embedded communication and computing system. *Id.* at 3:9–11.

In an automotive environment, various electronic control units ("ECUs") control such applications as engine control, brake control, or diagnostics through connections to various sensors and actuators organized into separate subnetworks. *Id.* at 3:13–18. Such applications are themselves grouped into backbone system functions, such as "body control, power train, and chassis." *Id.* at 3:19–21. With a hierarchical organization that includes gateways 101, 103, 104, 105, messages are relayed up and down through the system layers. *Id.* at 3:24–26. Each layer may contain multiple ECUs connected through wired serial multiplexing bus systems, with the '843 patent noting several examples that include CAN, LIN, and FlexRay. *Id.* at 3:26–33.

At the highest level in the hierarchy, "the system level," system gateway 101 is connected via various busses to other system-level ECUs, to subsequent gateways 103, and to external components 120. *Id.* at 3:60–67. In addition, system gateway 101 may be connected to external gateway 131 to link the system to remote device 132. *Id.* at 4:1–6. "Subsequent to the system level may be several layers of groups and subgroups that are link[ed] to the higher levels via gateways (101, 103, 104, 105)." *Id.* at 4:7–9.

In operation, ECU 102 receives "real-time" input variables from local sensors 108 or from networked sensors 106, respectively via signal lines 113 or multiplexing bus system 112. *Id.* at 3:39–42. "[R]eal-time may include any response time that may be measured in milli- or microseconds, and/or is less than 1 second." *Id.* at 3:36–38. ECU 102 processes the input variables and generates output variables that may be shared with other ECUs 102. *Id.* at 3:46–51. Two relevant modes of sharing are described.

First, ECUs 102 "typically share information with devices that are connected on the same physical multiplexing system. This method of information sharing is called horizontal information sharing in a hierarchical system." *Id.* at 3:51–55.

Second, a bulletin board may be used so that "the information is shared, in real-time, among a plurality of heterogeneous processes." *Id.* at 1:31–33. According to the '843 patent, "heterogeneous networks may refer to any different communication networks with at least one aspect that is different." *Id.* at 7:27–29.

The logical architecture of the system described in the '843 patent is described below in annotated Fig. 7[2] (Pet. 3):

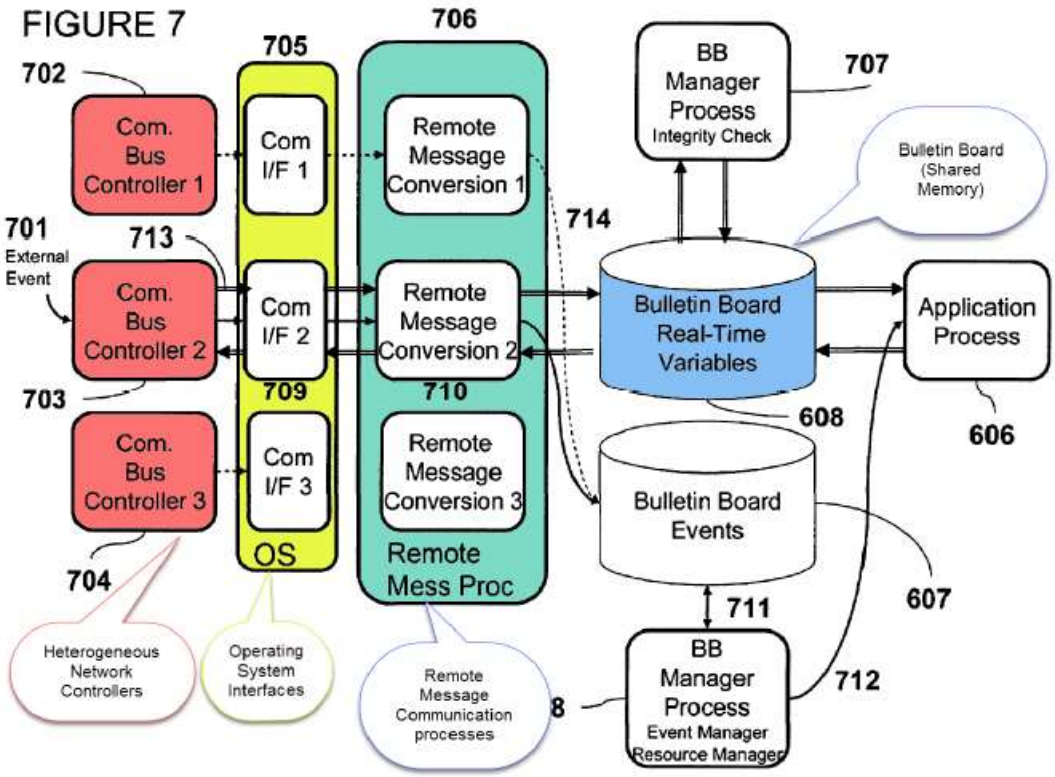

Figure 7 depicts a bulletin board that interacts with multiple communication buses.

The system architecture includes four main components: (1) network interfaces for each of the heterogeneous networks (red); (2) operating interfaces for each of the heterogeneous networks (yellow); (3) remote message processes for stripping out network-specific information (green);

[2] Figures from the '843 patent and cited references are shown with Petitioner's annotations as set forth in the Petition. Petitioner contends identified features are shown in the annotations. We rely on the Figures as presented in the '843 patent and the references.

and (4) a real-time, bulletin board-type shared memory (blue). Ex. 1001, 6:33–7:3.

In operation, an external event (for example, a flag indicating that data from a sensor is available) is transmitted on a network to a communication bus controller (*e.g.*, 703). *Id.* at 7:5–8. This causes an operating system interface (*e.g.*, 709) to notify the message communication process (*e.g.*, 710) that data is available. *Id.* The data is sent over the network as a network specific message. *Id.* at 7:4–49.

C. Illustrative Claim

All of the challenged claims, claims 1 and 47–51, are independent. Claim 51 is illustrative and reads:

> 51. An apparatus, comprising:
>
> a control unit configured for:
>
> identifying information associated with a message received utilizing a first network protocol associated with a first network;
>
> issuing a storage resource request in connection with a storage resource and determining whether the storage resource is available;
>
> determining whether a threshold has been reached in association with the storage resource request;
>
> in the event the storage resource is not available and the threshold associated with the storage resource request has not been reached, issuing another storage resource request in connection with the storage resource;
>
> in the event the storage resource is not available and the threshold associated with the storage resource request has been reached, sending a notification; and
>
> in the event the storage resource is available, storing the information utilizing the storage resource;

wherein the apparatus is operable such that the information is capable of being shared in real-time utilizing a second network protocol associated with a second network, and the control unit includes:

a first interface for interfacing with the first network, the first interface including a first interface-related first component for receiving first data units and a first interface-related second component, the control unit being operable such that the first data units are processed after which processed first data units are provided, where the first network is at least one of a Controller Area Network type, a Flexray network type, or a Local Interconnect Network type;

and

a second interface for interfacing with the second network, the second interface including a second interface-related first component for receiving second data units and a second interface-related second component, the control unit being operable such that the second data units are processed after which processed second data units are provided, where the second network is at least one of the Controller Area Network type, the Flexray network type, or the Local Interconnect Network type.

D. Instituted Grounds of Unpatentability

We instituted trial on the following grounds (Dec. 26–27).

References	Basis	Challenged Claims
Posadas[3], Stewart[4], and Wense[5]	35 U.S.C. § 103(a)	1 and 47–51
Miesterfeld[6], Stewart, and Wense	35 U.S.C. § 103(a)	1 and 47–51

II. ANALYSIS

A. Claim Construction

The Board interprets claims of an unexpired patent using the broadest reasonable construction in light of the specification of the patent in which they appear. *See* 37 C.F.R. § 42.100(b); *Cuozzo Speed Techs., LLC v. Lee*, 136 S. Ct. 2131, 2144–46 (2016) (upholding the use of the broadest reasonable interpretation standard).

---

[3]Posadas et al., "Communications Structure for Sensor Fusion in Distributed Real Time Systems," *Algorithms and Architectures for Real-Time Control 2000: A Proceedings volume from the 6th IFAC Workshop*, Palma de Mallorca, Spain (May 2000) (Ex. 1007, "Posadas").

[4] Stewart et al., "Integration of Real-Time Software Modules for Reconfigurable Sensor-Based Control Systems," *IEEE/RSJ International Conference on Intelligent Robots and Systems*, Raleigh, North Carolina (July 1992) (Ex. 1008, "Stewart").

[5] H-C. von der Wense et al., "Building Automotive LIN Applications," *Advanced Microsystems for Automotive Applications*, 280–292 (2001) (Ex. 1009, "Wense").

[6] U.S. Patent No. 6,141,710, issued Oct. 31, 2000 (Ex. 1010, "Miesterfeld").

Petitioner proposes the broadest reasonable construction of "real-time" includes "[a]ny response time that may be measured in milli- or microseconds, and/or is less than one second." Pet. 10. Petitioner contends the '843 patent specification expressly defines this term. *Id.* (citing Ex. 1001, 3:35–38). In light of the cited portion of the specification, we construe "real-time" as including responses that occur in less than one second. The first part of the quotation provided in the specification ("may be measured in milli- or microseconds") is not limiting because any response time, no matter how large or small, may be measured in milli- or microseconds.

Patent Owner proposes that the term, "sharing the information," as recited in claim 1 and similarly recited in claims 47–51, should be construed according to its plain and ordinary meaning, which Patent Owner argues is "completing delivery to a destination" as information is not "shared" until the information has completed delivery to a destination. PO Resp. 15–16. Patent Owner contends the specification describes the actual delivery of information to the local bulletin board. *Id.* (citing Ex. 1001, 6:27–31, 12:33–35).

Petitioner contends Patent Owner's proposed meaning is unreasonably narrow and proposes, instead, that the term should be construed as "making the information available to another process," consistent with its plain meaning. Reply 6–7. Petitioner observes the independent claims do not recite delivery to a second process, and, it is not until dependent claim 16 (not challenged in this IPR) in which "sharing" further includes "providing the information." *Id.* at 7. Petitioner contends the doctrine of claim differentiation further supports its proposed claim construction. *Id.*

Petitioner contends this claim construction is consistent with the Specification, in which information is described as shared by placing the information on a bulletin board. *Id.* We agree with Petitioner's claim construction analysis and agree that the broadest reasonable interpretation of "sharing the information" is "making the information available to another process."

B. Legal Principles

A claim is unpatentable for obviousness under 35 U.S.C. § 103 if the differences between the claimed subject matter and the prior art are "such that the subject matter as a whole would have been obvious at the time the invention was made to a person having ordinary skill in the art to which said subject matter pertains." *KSR Int'l Co. v. Teleflex Inc.*, 550 U.S. 398, 406 (2007). The question of obviousness is resolved on the basis of underlying factual determinations, including: (1) the scope and content of the prior art; (2) any differences between the claimed subject matter and the prior art; (3) the level of skill in the art; and (4) objective evidence of non-obviousness, i.e., secondary considerations.[7] *Graham v. John Deere Co.*, 383 U.S. 1, 17–18 (1966).

Additionally, the obviousness inquiry typically requires an analysis of "whether there was an apparent reason to combine the known elements in the fashion claimed by the patent at issue." *KSR*, 550 U.S. at 418 (citing *In re Kahn*, 441 F.3d 977, 988 (Fed. Cir. 2006) (requiring "articulated

[7] The parties do not address secondary considerations, which, accordingly, do not form part of our analysis.

reasoning with some rational underpinning to support the legal conclusion of obviousness")); *see In re Warsaw Orthopedic, Inc.*, 832 F.3d 1327, 1333 (Fed. Cir. 2016) (citing *DyStar Textilfarben GmbH & Co. Deutschland KG v. C. H. Patrick Co.*, 464 F.3d 1356, 1360 (Fed. Cir. 2006)).

To prevail on its challenges, Petitioner must demonstrate by a preponderance of the evidence that the claims are unpatentable. 35 U.S.C. § 316(e); 37 C.F.R. § 42.1(d). "In an [*inter partes* review], the petitioner has the burden from the onset to show with particularity why the patent it challenges is unpatentable." *Harmonic Inc. v. Avid Tech., Inc.* 815 F.3d 1356, 1363 (Fed. Cir. 2016) (citing 35 U.S.C. § 312(a)(3) (requiring *inter partes* review petitions to identify "with particularity . . . the evidence that supports the grounds for the challenge to each claim")). This burden never shifts to Patent Owner. *See Dynamic Drinkware, LLC. v. Nat'l Graphics, Inc.*, 800 F.3d 1375, 1378 (Fed. Cir. 2015) (citing *Tech. Licensing Corp. v. Videotek, Inc.*, 545 F.3d 1316, 1326–27 (Fed. Cir. 2008)) (discussing the burden of proof in *inter partes* review). Furthermore, Petitioner does not satisfy its burden of proving obviousness by employing "mere conclusory statements." *In re Magnum Oil Tools Int'l, Ltd.*, 829 F.3d 1364, 1380 (Fed. Cir. 2016).

C. Level of Skill in the Art

Petitioner's Declarant, Philip Koopman, Ph.D., asserts that a person of ordinary skill in the art "would have at least an undergraduate degree in Computer Engineering, Computer Science, or equivalent degree, and at least two years relevant experience in industry." Ex. 1005 ¶ 48.

Patent Owner's Declarant, Jeffrey A. Miller, Ph.D, asserts that a person of ordinary skill in the art would have at least the qualifications of or

equivalent to either a master's degree in electrical engineering, computer science, or computer engineering with course work or research in embedded networking technologies or an undergraduate degree in electrical engineering, computer science, or computer engineering with at least two years of relevant work experience in industry. Ex. 2004 ¶ 12.

Based upon our review of the '843 patent and the prior art of record, we find Dr. Miller's statement of the level of ordinary skill in the art reasonable, and adopt it for this Final Written Decision.

D. Obviousness over Posadas, Stewart, and Wense Claims 1 and 47–51

Petitioner contends that claims 1 and 47–51 are unpatentable under 35 U.S.C. § 103(a) as obvious over Posadas, Stewart, and Wense. Pet. 17–53. Relying on the testimony of Dr. Koopman, Petitioner explains how the combination of Posadas, Stewart, and Wense allegedly teaches all the claim limitations and contends a person having ordinary skill in the art would have combined the teachings of the references. *Id.* (citing Ex. 1005).

1. Posadas

Posadas describes a real-time communications system implemented in an autonomous industrial robot referred to as YAIR (Yet Another Intelligent Robot). Ex. 1007, 8. YAIR includes a number of sensors that are interconnected using two different, real-time networks. *Id.* at 8–11; Fig. 1. The first network, referred to as the "reactive level," is described as "Hard Real-Time," and uses distributed CAN objects on a CAN bus. *Id.* The second network, referred to as the "deliberative level," is described as "Soft Real-Time," and uses the IP protocol on an Ethernet Bus. *Id.* The two

networks share information using a "blackboard" shared memory. *Id.* at 10–11.

2. Stewart

Stewart discloses a framework for integrating real-time software control modules that comprise a reconfigurable multi-sensor based system. Ex. 1008, 6. Stewart discloses the use of a real time embedded system in a distributed environment that uses a shared, global memory. *Id.* at 10, 12.

3. Wense

Wense describes the use of different networks in automobiles, including CAN, LIN, FlexRay, and J1850, and describes the use of CAN and LIN in a single automotive network. Ex. 1009, Abstract, 10–13, Fig. 3.

4. Analysis

Petitioner asserts that the combination of Posadas, Stewart, and Wense teaches all of the limitations of independent claim 51. Generally, Petitioner contends Stewart teaches the memory-related limitations[8] of claim 51 and relies on a combination of Posadas and Wense for the remaining limitations. Pet. 17–47. Specifically, Petitioner contends Posadas discloses

[8] By memory-related limitations, we refer generally to the limitations of claim 51 relating to memory (i.e., a storage resource): causing a determination as to whether a storage resource is available; in the event the storage resource is not available, determining whether a timeout has been reached and causing a re-request in connection with the storage resource if the timeout has not been reached; in the event the timeout has been reached, causing an error notification to be sent; and in the event the storage resource is available, causing storage of the information utilizing the storage resource. Ex. 1001, 18:34–48. Petitioner refers to these limitations as 51d–51h. Pet. App'x A.

two different networks wherein the first network is a CAN network and the second network is Ethernet. Petitioner contends the use of LIN or FlexRay as the second network would have been obvious to one of ordinary skill in the art, as demonstrated by the combination of Posadas with Wense. *Id.*

Petitioner's assertions regarding the individual limitations of claim 51, and Patent Owner's contentions, can be summarized as follows.

Independent claim 51 is directed to "An apparatus, comprising: a control unit." Petitioner contends, to the extent the preamble is a limitation, it is disclosed by the Posadas communications architecture used in the YAIR robot. Pet. 17–18 (citing Ex. 1007, Abstract). We agree.

Regarding "identifying information associated with a message received utilizing a first network protocol associated with a first network," Petitioner contends Posadas discloses a CAN system ("first network protocol") that is distributed over a CAN bus ("first network"). Pet. 18–20 (citing Ex. 1007, 9–10, Figs. 3, 4). We note the term "message" is not defined in the '843 patent specification. According to Dr. Koopman, transmitted data (which carries a message) is typically structured into a frame (e.g., CAN frame), which is a set of bits on the network divided into fields. Ex. 1005 ¶¶ 56, 57. We credit Dr. Koopman's testimony that it was common knowledge at the time of the invention to refer to a frame as a message and these terms are synonymous to one of ordinary skill in the art. *Id.* We agree Posadas discloses this limitation.

Petitioner contends Posadas describes the use of a shared memory ("storage resource") and further contends "issuing a storage resource request in connection with a storage resource and determining whether a storage resource is available" prior to writing is a well-known step in storing

information, and is disclosed by Stewart. Pet. 20–21 (citing Ex. 1007, 10; Ex. 1008, 6, 7, 9); *see* Ex. 1005 ¶ 126. Specifically, Petitioner contends Stewart describes a "spin-lock" that uses a "test-and-set (TAS)" operation to determine memory availability. Pet. 20–21 (citing Ex. 1008, 6–7, 9, 11). Petitioner further contends this TAS algorithm first determines whether memory is available before writing to it, then writes a "1" to a lock table to lock the memory for concurrent writes from other processes. *Id.* We agree with Petitioner's analysis, which Patent Owner does not contest.

Regarding "determining whether a threshold has been reached in association with the storage resource request," Petitioner contends Stewart discloses that a task trying to access the global variable table stored in shared memory must continually retry accessing the table, waiting a particular amount of time before each retry, referred to as a "polling time." Pet. 24 (citing Ex. 1008, 11). Petitioner further contends Stewart discloses that if a maximum amount of time has been reached, then the storage in memory is not performed ("in the event the storage resource is not available and the threshold associated with the storage resource request has not been reached, issuing another storage resource request in connection with the storage resource"). *Id.* We agree that Stewart discloses the recited limitations.

Petitioner contends Stewart discloses "in the event the storage resource is not available and the threshold associated with the storage resource request has been reached, sending a notification" because Stewart discloses that a time-out error will occur if a time-out has been reached for a task that has been continually trying to access the table but has been unsuccessful and error handlers should be installed. *Id.* at 24–25 (citing Ex. 1008, 11).

In response, Patent Owner contends "[a]t no point does Stewart actually teach sending a notification back to the node requesting access to the storage resource." PO Resp. 1. Patent Owner contends Stewart does not describe "sending a notification" because Stewart's reference to error handlers is insufficient: "[w]hen using the time-out mechanism, error handlers should be installed to detect tasks that suffer successive timeout errors. **Discussion on handling these errors is beyond the scope of this paper**." *Id.* at 23–25 (quoting Ex. 1008, 11) (emphasis added). According to Patent Owner:

> The typical meaning of an "error handler" is a mechanism that forestalls errors if possible, and then recovers from errors when they occur without terminating the application. "Error handler" does not necessarily or inherently include sending a notification, as required by Claim 51 of the '843 Patent. In fact, Stewart states that the "discussion on handling these errors is beyond the scope of this paper," which expressly disclaims the disclosure of any particular error-handling method, and, thus, expressly excludes disclosing the sending of any notification. Petitioner does not point to any function or structure in Stewart which sends "a notification." Stewart does not disclose claim element 51g. Ex. 2004 ¶ 30.

Id. at 24–25.

Petitioner contends the claims do not require sending a notification to any particular recipient, merely that a notification is sent. Reply 18. We agree. Regarding the meaning of "error handler," Petitioner contends:

> An error handler is simply a programming routine for handling an error after it has been detected. As such, it must be invoked in the first place. In other words, the error handler ***must be told*** that an error has occurred before it can handle it—that message constitutes a "notification." Indeed, this notification may take several forms—such as by setting a flag; sending an interrupt signal; signaling a run-time exception; or executing a conditional

> instruction. Ex. 1037 ¶¶ 55–56. Regardless of how the error handler is invoked, there is a change in program flow that results in the error handler being informed about an error. And that invocation constitutes "sending a notification."

Id. Regarding the statement in Stewart that "discussion on handling these errors is beyond the scope of this paper," Petitioner contends further details were unnecessary because error handlers were basic tools. *Id.* at 19.

The parties address error handlers in detail in the Patent Owner Response (1, 11, 23–25, 46–48) and the Reply (2, 17–19). *See also* Ex. 1037 (Koopman Decl. in support of Reply) ¶¶ 50–55; Ex. 2004 (Miller Decl.) ¶¶ 26, 30; Ex. 1040 (Miller Dep.), 113:20–123:5; Paper 33 (Hearing Tr.), 16:13–24:10, 35:16–39:6, 43:19–45:6, 48:19–24. We have reviewed the arguments of Petitioner and Patent Owner and we note as particularly relevant the deposition testimony of Patent Owner's declarant, Dr. Miller, in which Dr. Miller agreed with Petitioner that an error handler functions to handle an error after it has been detected:

> Q. So an error handler handles the error after it's already occurred; right?
>
> A. Yes.
>
> Q. So it doesn't prevent it before it happens; right?
>
> A. No.

Ex. 1040, 122:18–123:5.

We are persuaded that the evidence supports Petitioner's position that Stewart's reference to error handlers, in the context of the teaching of memory management, would be understood by one of ordinary skill in the art as teaching "sending a notification." In particular, in order for an error handler to act regarding an error after it has occurred, a notification would be sent. We agree with Petitioner that the claims "do not require sending a

notification to any particular recipient—it need only be sent." Reply 18 (citing Ex. 1037 ¶ 54). Additionally, Petitioner's explanation in the Reply (referring to the Declaration of Dr. Koopman in support of Reply) is not a new argument as it is responsive to Patent Owner's argument that "[t]he typical meaning of an 'error handler' is a mechanism that forestalls errors if possible, and then recovers from errors when they occur without terminating the application." Reply 17–19; PO Resp. 24. *See* Office Patent Trial Practice Guide, 77 Fed. Reg. 48,756, 48,767 (Aug. 14, 2012).

In view of the above, we agree that Stewart discloses the limitation "in the event the storage resource is not available and the threshold associated with the storage resource request has been reached, sending a notification."

Petitioner contends Stewart also discloses storing information in memory once it is determined that the memory is available wherein Stewart discloses a global variable table which is stored in shared memory for the exchange of data (i.e., Stewart discloses the limitation "in the event the storage resource is available, storing the information utilizing the storage resource"). Pet. 25 (citing Ex. 1008, 11).

Patent Owner contends Stewart's modules that are sharing information are software modules, which may be resident on the same or separate processors, not modules connected to separate and distinct data networks connected by a shared memory system. PO Resp. 30 (citing Ex. 2004 ¶ 41). We agree with Petitioner because Stewart teaches storing the global variable table in shared memory for the exchange of data, once it is determined that memory is available. Patent Owner's contention is not commensurate with the scope of the claim.

Regarding "wherein the apparatus is operable such that the information is capable of being shared in real-time, utilizing a second network protocol associated with a second network," Petitioner contends Posadas describes a first network (CAN), and a second network that is CAN, Ethernet, DDE, RS232, "and so on." Pet. 25–29 (citing Ex. 1007, 8, Fig. 4). Petitioner contends the two networks and protocols are shown below in annotated Figure 4 of Posadas (Pet. 26):

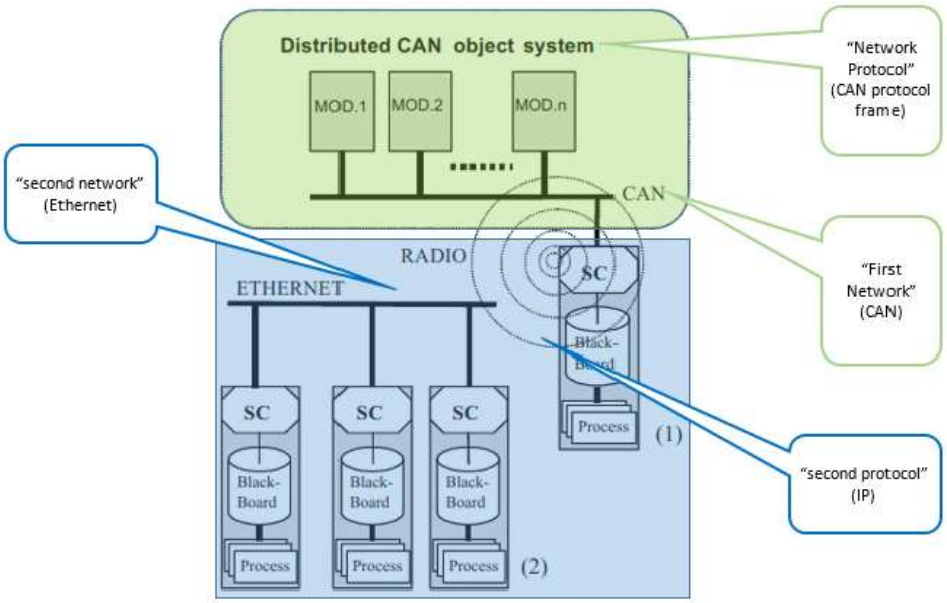

Fig. 4: Distributed blackboard structure.

Figure 4 depicts a distributed blackboard system.

Petitioner contends the ISCCAN gateway shares the information between the two networks and is shown below in annotated Figure 1 of Posadas (Pet. 27):

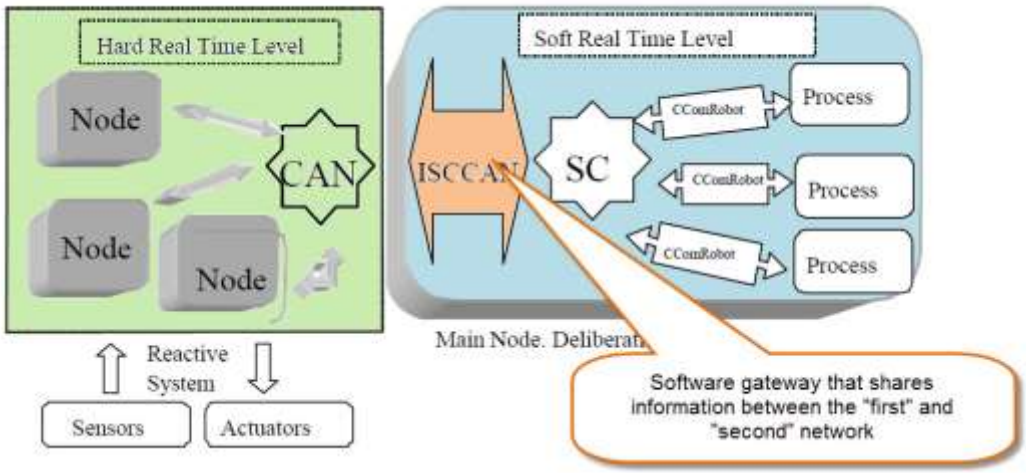

Figure 1 depicts the ISCCAN gateway that shares information between the two networks.

Regarding the requirement that information is capable of being "shared in real-time," Petitioner contends both networks are labeled "Real Time" networks and further contends the deliberative, "soft" real time system is able to withstand "communication overloads of 20ms introduced by the SC+ISCCAN system." *Id.* 28–29 (citing Ex. 1007, 8–11, 13, Fig. 1).

Patent Owner highlights Petitioner's assertion that Posadas "expressly requires a guaranteed response time, one of the defining characteristics of a real-time system." PO Resp. 25 (citing Pet. 28 n.6). According to Patent Owner, "soft real-time" and "hard real-time" as used in Posadas are not defined to be within a specific bound (i.e., less than one second), and without any bounds on the variables, it is not possible or appropriate to make any assumptions as to the overall response time. *Id.* at 26. Patent Owner contends, to the extent Posadas shows an apparatus operable such that information is capable of being shared in real-time, it is not an enabling disclosure as it would require an undue degree of experimentation. *Id.* at 26–27.

We agree with Petitioner that Posadas's CAN bus and Ethernet bus meet the definition of "real-time" as we have construed the term. *See* Reply 14 (citing Ex. 1037 ¶ 45). In particular, Posadas describes sample response times for the CAN bus, all of which are expressed in milliseconds and under 1 second. *Id.* (citing Ex. 1007, Table 1). Further, Posadas describes the Ethernet network as operating in "soft real-time" and identifies tasks implemented using an "REC" module, "all of which are expressed in milliseconds and well below 1 second." *Id.* at 15–16 (citing Ex. 1007, 11, 12; Ex. 1037 ¶ 50).

As Petitioner observes, even if other examples may exist that exceeded these times, the "claims do not require that all possible embodiments of Posadas run in real time—there is no 'guaranteed' requirement." *Id.* at 16. Regarding "soft real-time" and "hard real-time," Petitioner observes:

> Both type[s] of real-time systems impose a bound on the response time. The only difference is that, in a hard real-time system, response times must meet that deadline, whereas a soft real-time system has more flexibility. Ex. 1037 ¶ 49. As shown by the examples in Posadas, even considering the flexibility afforded a soft real-time system, response times are well under 1s.

Id. at 15.

We also agree with Petitioner that Patent Owner's assertion that Posadas is not an enabling disclosure is conclusory and without evidentiary support. *See id.* at 17. Further, as Petitioner observes, even a non-enabling disclosure is prior art for all it teaches for purposes of determining obviousness. *Id.* (citing *Amgen Inc. v. Hoechst Marion Roussel, Inc.*, 314 F.3d 1313, 1357 (Fed. Cir. 2003) ("[A] reference need not be enabled; it

qualifies as a prior art, regardless, for whatever is disclosed therein")). For the reasons explained above, Posadas sufficiently describes real-time sharing between two networks to support an obviousness determination. *Id.*

The control unit recited in claim 51 includes "a first interface for interfacing with the first network." Petitioner contends that Posadas discloses a "first network" (CAN) and a "first interface for interfacing with the first network" (ISCCAN software). Pet. 29–30 (citing Ex. 1007, 10; Fig. 3); *see id.* at 27 (annotated Figure 1).

Regarding "the first interface including," Petitioner contends this limitation describes how network-specific messages (CAN frames) are processed so that the data within those messages can be stored in memory. Pet. 30–31 (citing Ex. 1001, Fig.7, 6:33–7:4). More specifically, Petitioner contends this limitation requires that the interface include a "first component" that receives "first data units" (CAN frame) that are processed, after which processed first data units are provided. *Id.*

Petitioner contends Posadas discloses this limitation wherein the CAN protocol message frames ("first data units") are used to transport data from a Communications Object (COB). *Id.* (citing Ex. 1007, 10). Petitioner contends this CAN frame is transmitted by the bus controller and received by the CAN network interface logic in the ISCCAN interface—the claimed "first interface-related first component." *Id.* Petitioner contends the gateway software ISCCAN performs specific translations between CAN protocol and SC data wherein the transformed format used to store the data in the blackboard are the "processed first data units." *Id.* Petitioner contends the portion of the ISCCAN that translates raw CAN data to the SC format is the claimed "first interface-related second component." *Id.*

Petitioner contends the first interface limitations are shown in annotated Figure 1. Pet. 32.

The control unit recited in claim 51 also includes a "second interface for interfacing with the second network." Petitioner contends Posadas discloses a second network protocol ("[E]thernet, DDE, RS232, and so on") and an interface ("second interface") described as the radio Ethernet that interfaces with the Ethernet network ("a second interface for interfacing with the second network"). Pet. 33 (citing Ex. 1007, 8, 9 at Fig. 2).

Regarding "the second interface including," Petitioner contends this limitation is an analog to "the first interface including" written from the perspective of the second interface (Posadas's Ethernet interface). Pet. 35–36. Petitioner contends Posadas discloses an IP frame that is communicated via an Ethernet link—the claimed "second data units" received by the second interface. *Id.*; *see* Ex. 1007, 9 (the main control node includes "a full CAN interface, and radio [e]thernet link that *provides external IP communication*"). Petitioner contends the distributed blackboard system ("SC") includes both the "second interface-related first component" and the "second interface-related second component." Pet. 36 (citing Ex. 1007, 10). Petitioner contends the SC receives IP data and stores data in the SC referred to as SC objects and these SC objects are "processed second data units." *Id.*; *see also* annotated Figure 4 (Pet. 35).

Petitioner contends Posadas discloses a first network (CAN) and a "second network" that is one of Ethernet, DDE, RS232, "and so on" (i.e., Posadas discloses the limitation "where the second network is at least one of the Controller Area Network, the Flexray network, or the Local Interconnect Network"). Pet. 37 (citing Ex. 1007, 8, Fig. 4). Petitioner further contends

one of ordinary skill at the time of the alleged invention would have understood that networks other than CAN, DDE, Ethernet, or RS232 could be used as the "second" network and two such networks were LIN and FlexRay. *Id.* at 38. Petitioner contends LIN and FlexRay were well-known prior to the priority date of the '843 patent and were well-known to work in conjunction with the CAN network. *Id.* at 38–40 (citing Ex. 1005 ¶¶ 72–79, 175). In particular, Petitioner contends Wense describes the use of LIN in the same network as CAN. *Id.* (citing Ex. 1009, 13, Fig. 3 ("LIN has been developed to serve as local subnet to networks with higher performance such as CAN and thus replace hard wiring.")). Petitioner contends Wense also discloses FlexRay as an alternative network that can be used. *Id.* at 38.

Patent Owner contends Posadas does not disclose the second network and there is no indication that Posadas's ISCCAN and SC are interfaces for data units arriving from two separate networks. PO Resp. 21–22 (citing Ex. 2004 ¶¶ 21, 23). According to Patent Owner, Posadas discloses a distributed blackboard for sharing "processed first data units" but there is no second interface that receives messages from a second source which are then processed to create "processed second data units." *Id.* at 22–23 (citing Ex. 2004 ¶¶ 42–43).

As Petitioner notes, there is no dispute between the parties that Posadas shares data from a first network (CAN) to a second network (Ethernet). Reply 1. Patent Owner, however, improperly reads into the claim a limitation that requires sharing data in the reverse direction—from the second network (Ethernet) to the first network (CAN). *See id.* at 10–11. Moreover, Petitioner points out that Posadas describes sharing in the reverse direction. *Id.* at 11–13. In particular, Posadas's SC system requires a

program instance to be executed in each computer and these program instances communicate with each other and update the distributed data. *Id.* at 11 (citing Ex. 1007, 153; Ex. 1037 ¶¶ 38–39). *See also* Ex. 1007, Figs. 1 and 4, in which computers on the Ethernet network have these program instances and communicate between the Ethernet nodes and the blackboard. Additionally, Petitioner observes the SC system does not merely forward stored objects to the Ethernet network without processing because, to transmit data over Ethernet, the data must be pre-processed. Reply 12–13 (citing Ex. 1037 ¶ 43). We find Petitioner's argument to be persuasive and supported by the record.

Petitioner presents a rationale for one of ordinary skill in the art to have combined Posadas, Stewart, and Wense. Pet. 21–23, 40–45. For example, regarding the combination of Posadas and Wense, Petitioner contends, *inter alia*, both relate to distributed systems in a multiplex networking environment and the combination of their teachings would have been predictable. *Id.* at 40, 42 (citing Ex. 1009, 10, 11). Regarding the combination of Posadas and Stewart, Petitioner contends, *inter alia*, both are in the same field of endeavor (real-time distributed control systems) and use similar techniques to solve the same problem (i.e., a shared memory architecture to exchange information between the hybrid control modules that make up a real-time distributed system). *Id.* at 21–22 (citing Ex. 1007, 8; Ex. 1008, 6, 8, 11, 12).

Patent Owner contends there is no basis for combining Posadas and Stewart to arrive at the invention of claim 51. PO Resp. 28–30 (citing Ex. 2004 ¶¶ 30, 33). According to Patent Owner, Petitioner provides no explanation why a skilled artisan would have combined Posadas's

blackboard system with Stewart's non-blackboard system. *Id.* at 28–30 (citing Ex. 2004 ¶¶ 34– 39).

Petitioner contends a blackboard is simply a specific type of shared memory and the operations described by Stewart are fundamental features that could apply to any shared memory environment, e.g., determining whether memory is available before writing is a basic process that is not specific to any memory architecture. Reply 20 (citing Ex. 1037 ¶¶ 59–60). According to Petitioner, Stewart's spin locks were well-known, simple tools to access shared memory and application to Posadas would have been straightforward. *Id.* at 20–21 (citing Ex. 1037 ¶¶ 61–62; Ex. 1005 ¶¶ 97, 98).

We agree that Stewart's memory management techniques are fundamental techniques applicable to shared memory environments and Petitioner's reasoning is thus supported by sufficient rational underpinning. *See KSR*, 550 U.S. at 418. In particular, we credit Dr. Koopman's testimony as being more persuasive than Dr. Miller's testimony on this point. *See* Ex. 1037 ¶¶ 59–62; Ex. 1005 ¶¶ 97, 98; Ex. 2004 ¶¶ 30–39.

Patent Owner also contends a person of ordinary skill in the art would not have been motivated to combine Wense with Posadas because Posadas links two different networks (CAN and Ethernet) and uses the User Datagram Protocol ("UDP"). PO Resp. 35–36. According to Patent Owner, Wense describes a system with low latencies, and thus teaches away from non-deterministic networks, such as Ethernet. *Id.* at 37 (citing Ex. 1009,[9]

[9] Patent Owner cites Exhibit 1010 (Miesterfeld). In context, we understand the citation as intended to be to Exhibit 1009 (Wense).

13–15, 17). Patent Owner contends that LIN is much slower than Ethernet, and it would not have been obvious to replace Posadas's Ethernet with Wense's LIN. *Id.* at 37–38.

Petitioner contends Patent Owner erroneously assumes Posadas uses UDP protocol, but, to the contrary, Posadas does not mention UDP, and UDP is but one of several alternate protocol suites. Reply 21–22 (citing Ex. 1040, 96:13–97:8). Moreover, Petitioner contends a person of ordinary skill in the art would have been motivated to use LIN instead of Ethernet for the low latency of LIN. *Id.* at 22 (citing Ex. 1037 ¶ 65; Ex 1009, 13). Although data transfer in LIN is slower than Ethernet, Petitioner contends this is only one factor to be considered when choosing a network. *Id.* Another factor is that LIN is significantly less expensive as compared to Ethernet, and Dr. Koopman testifies persuasively that a person of ordinary skill in the art would have considered LIN to be a routine design choice. *Id.* (citing Ex. 1037 ¶ 66).

For these reasons, we agree Petitioner has shown that one of ordinary skill in the art would have combined the first and second networks (CAN and Ethernet) and interfaces of Posadas with known memory management techniques (as further described by Stewart). Further, Petitioner has shown sufficiently that one of ordinary skill in the art would have combined the Posadas CAN network with a known second network (LIN) as described by Wense. Petitioner's reasoning is thus supported by sufficient rational underpinning. *See KSR*, 550 U.S. at 418.

In view of the above, we find Petitioner has shown, by a preponderance of the evidence, that claim 51 is unpatentable over Posadas, Stewart, and Wense.

Remaining Claims 1 and 47–50

Petitioner contends independent claim 1 is very similar to claim 51 wherein the differences are that the preamble recites a "non-transitory computer-readable medium," and each of the limitations requires either "computer code" or a "computer program" for performing the method. Pet. 45–47. Petitioner contends Posadas discloses the "non-transitory computer-readable medium" and that its method is carried out by computer code as Posadas describes a communications architecture used in the YAIR robot, and thus discloses a computer program product "for sharing information." *Id.*; *see* Ex. 1007, Abstract. Petitioner further contends Posadas discloses that the information is shared using a "computer program product" containing "computer code" that is stored in a "non-transitory computer-readable medium." *Id.*; *see also* Ex. 1007, 8–11. Petitioner also contends Posadas describes "allowing receipt of information," as recited in claim 1, specifically describing how a CAN frame associated with a CAN network is received by the ISCCAN interface. *Id.*

Petitioner contends claims 47, 48, and 49 (which are also independent claims) are similar to claim 51 and contends the claim 51 analysis, and the claim 1 analysis regarding receipt or receiving information, *supra*, are applicable. Pet. 47–51.

Petitioner contends claim 50 is very similar to claim 51 and contends the claim 51 analysis, and the claim 1 analysis regarding receiving information, *supra*, are applicable. Pet. 51–53. Claim 50 further requires the first interface-related component to receive "first signals" that are processed before the results of the processing are provided, and the second interface-related component to receive "second signals" that are processed

before the results of the processing are provided. *Id.* at 52. Petitioner contends these limitations are disclosed by Posadas, particularly as discussed, *supra*, in connection with the first and second interface limitations. *Id.*; *see* Ex. 1007, 11.

We agree that the remaining claims 1 and 47–50 are similar to claim 51, discussed *supra*, and we agree Petitioner provides sufficient evidence that these claims, like claim 51, are unpatentable over Posadas, Stewart, and Wense.[10]

Having considered the *Graham* factors, we conclude that Petitioner demonstrates, by a preponderance of the evidence, that claims 1 and 47–51 are unpatentable under 35 U.S.C § 103(a) Posadas, Stewart, and Wense.

---

[10] In the Institution Decision, we observed that several limitations of method claim 47 may be conditional limitations not entitled to patentable weight. Dec. 16 n.6. Because we find that the limitations are disclosed by Stewart, we need not address whether those limitations are entitled to patentable weight. *See Ex parte Schulhauser*, No. 2013-007847, 2016 WL 6277792, at *9 (PTAB April 28, 2016) (precedential) (holding "[t]he Examiner did not need to present evidence of the obviousness of the remaining method steps of claim 1 that are not required to be performed under a broadest reasonable interpretation of the claim (e.g., instances in which the electrocardiac signal data is not within the threshold electrocardiac criteria such that the condition precedent for the determining step and the remaining steps of claim 1 has not been met)"). *See also Ex parte Katz*, No. 2010-006083, 2011 WL 514314 (BPAI Jan. 27, 2011); *Cybersettle, Inc. v. Nat'l Arbitration Forum, Inc.*, 243 Fed. Appx. 603, 607 (Fed. Cir. 2007) (unpublished) ("It is of course true that method steps may be contingent. If the condition for performing a contingent step is not satisfied, the performance recited by the step need not be carried out in order for the claimed method to be performed."). The parties' arguments on this issue are moot. *See* PO Resp. 59–60; Reply 27.

C. Obviousness over Miesterfeld, Stewart, and Wense Claims 1 and 47–51

Petitioner contends that claims 1 and 47–51 are unpatentable under 35 U.S.C. § 103(a) as obvious over Miesterfeld, Stewart, and Wense. Pet. 55–88. Relying on the testimony of Dr. Koopman, Petitioner explains how Miesterfeld (instead of Posadas) and the combination with Stewart and Wense allegedly teaches all the claim limitations and contends a person having ordinary skill in the art would have combined the teachings of the references. *Id.* (citing Ex. 1005).

1. *Miesterfeld*

Miesterfeld discloses a system that shares information between a vehicle data bus ("VDB bus") and an intelligent transportation ("ITS") data bus (ITS bus) using a shared memory to which both the VDB bus and ITS bus have access, and can be used to exchange data.[11] Ex. 1010, Abstract, Fig. 1. ITS may include a number of different data buses, one of which is disclosed as "IDB." *Id.* at 9:55–58.

2. Analysis

Generally, Petitioner contends Stewart teaches the memory-related limitations of claim 51 and relies on a combination of Miesterfeld and

---

[11] The parties dispute the degree to which Miesterfeld was considered by the Examiner during prosecution. *See* PO Resp. 6–8; Reply 4–5. In particular, Patent Owner contends that Petitioner's statement that "the applicants . . . stated that the prior art disclosed many of the limitations of the claims" is a mischaracterization of the prosecution history. Pet. 5; PO Resp. 6–8. We need not resolve this dispute. We have performed an independent analysis of Miesterfeld and do not rely on possible admissions by Patent Owner during prosecution to reach our conclusions.

Wense for the remaining limitations. *Id.* Specifically, Petitioner contends Miesterfeld discloses two different networks wherein the first network is a CAN network and the second network is a J1850 or other network. Petitioner further contends the use of LIN or FlexRay as the second network would have been obvious to one of ordinary skill in the art, as demonstrated by the combination of Miesterfeld with Wense. *Id.* Patent Owner contends a person of ordinary skill in the art would not have been motivated to combine Miesterfeld and Stewart and, even if such combination were made, it would not include the required CAN network as Miesterfeld does not disclose a CAN network. PO Resp. 44–45, 48–52.

Petitioner's assertions regarding the individual limitations of claim 51, and Patent Owner's contentions, can be summarized as follows.

Independent Claim 51 is directed to "An apparatus, comprising a control unit." Petitioner contends, to the extent the preamble is a limitation, it is disclosed by Miesterfeld, which describes a system for sharing information between a VDB bus and an ITS bus by using a shared memory to which both the VDB bus and ITS bus have access. Pet. 53–54 (citing Ex. 1010, 2:23–24); *see also* Ex. 1010, 1:6–10.

Regarding "identifying information associated with a message received utilizing a first network protocol associated with a first network," Petitioner contends Miesterfeld discloses an "ITS data bus interface" that "enables data exchange between memory 30 and ITS data bus 24" and interconnected "ancillary control devices" that "exchange data via the ITS data bus." Pet. 55–57 (citing Ex. 1010, 3:23–25, 3:41–42, 3:56–57). Petitioner contends the ITS data bus and the devices interconnected to it are the claimed "first network." *Id.*

Petitioner also contends Miesterfeld discloses a "first network protocol" associated with the first network: either "D2B, USB, IDB, Firewall [*sic*: Firewire], and the like." Pet. 55–56 (citing Ex. 1010, 9:55–57); *see also* Ex. 1005 ¶¶ 85–88, 217; annotated Figure 1 (Pet. 56). We agree with Petitioner's analysis regarding this limitation, which Patent Owner does not contest.

Regarding "issuing a storage resource request in connection with a storage resource and determining whether the storage resource is available," Petitioner contends Miesterfeld discloses that before reading or writing to the shared memory ("storage resource" SPI RAM), the ITS data bus first determines whether the shared memory is available. Pet. 57 (citing Ex. 1010, 6:33-40; Fig. 4). We agree.

Regarding "determining whether a threshold has been reached in association with the storage resource request; in the event the storage resource is not available and the threshold associated with the storage resource request has not been reached, issuing another storage resource request in connection with the storage resource; and in the event the storage resource is not available and the threshold associated with the storage resource request has been reached, sending a notification," Petitioner contends the combination of Miesterfeld and Stewart teaches these limitations. Pet. 58–63. We agree with Petitioner that Miesterfeld discloses determining a timeout. *See id.* at 59 (citing Ex. 1010, 6:46–50). Further, for the reasons discussed *supra* with respect to the previous ground, we agree with Petitioner that Stewart teaches the remainder of the memory-related limitations. *See id.* at 59, 62–63 (citing Ex. 1008, 6, 7, 9). In particular, Patent Owner repeats its argument that Stewart does not send a notification

as discussed in the challenge over Posadas, Stewart, and Wense, discussed *supra*. PO Resp. 46–48.

Regarding "in the event the storage resource is available, causing storage of the information utilizing the storage resource," Petitioner contends Miesterfeld discloses storing the information using the shared memory if the memory is available wherein once the SPI RAM (the storage resource) becomes available, the ITS data bus sets the SPI RAM Access Required ("SRAA") signal. Pet. 62 (citing Ex. 1010, 6:40–54). We agree.

Regarding "operable such that the information is capable of being shared in real-time utilizing a second network protocol associated with a second network," Petitioner contends Miesterfeld discloses sharing data written by the ITS data bus to shared memory using a VDB message format ("second network protocol") and "[t]he VDB data bus and its interconnected devices are the claimed 'second network.'" Pet. 63–64 (citing Ex. 1010); *see also* annotated Fig. 1 (Pet. 64). Petitioner contends Miesterfeld discloses that the information is shared in real-time because the sharing operations take place within microseconds. Pet. 65 (citing Ex. 1010, 6:43–62, 8:51–56). We agree.

Regarding "a first interface portion for interfacing with the first network, the first interface portion including a first interface-related first component for receiving first data units and a first interface-related second component, the control unit being operable such that the first data units are processed after which processed first data units are provided," Petitioner contends Miesterfeld discloses an ITS data bus interface ("first interface portion") that interfaces with an ITS data bus and its interconnected devices

("first network"). Pet. 65–67 (citing Ex. 1010, 3:23–25, Fig. 1); *see also* annotated Figure 1 (Pet. 66). We agree.

Petitioner contends Miesterfeld discloses that information to be stored in memory is first formatted into ITS data that is received by the ITS data bus interface. Pet. 66–67 (citing Ex. 1010, 3:23–25, 3:54–58). Petitioner contends this ITS data is the "first interface-related first layer message[12]" ("first data units") and once received, the ITS data bus interface (the claimed "first interface-related first part" or "first component") processes the information for storage into memory and this is the "first interface-related second layer message" ("processed first data units"). *Id.* (citing Ex. 1010, 7:29–31); *see also* annotated Fig. 1 (Pet. 67). We agree.

Petitioner contends Miesterfeld discloses an IDB bus as an example of a specific ITS data bus and, by definition, IDB runs on CAN. Pet. 67–68 (citing Ex. 1010, 9:55–58; Ex. 1005 ¶¶ 85–88, 254–255). Petitioner contends the "IDB" bus disclosed as an ITS data bus in Miesterfeld is a CAN bus (i.e., Miesterfield discloses the limitation "the first network is at least one of a Controller Area Network type, a Flexray network type, or a Local Interconnect Network type"). *Id.*

According to Patent Owner, Miesterfeld refers solely to IDB, which is not CAN:

> A skilled artisan would understand that reference to mean Standard J2355_199710, which was published October 1, 1997, and was the only

---

[12] Claim 51 limitations recite "first data units" and "second data units" while Petitioner uses the terms "first layer message" and "second layer message," which appear in other claims (e.g., claims 1 and 47). Based on the record before us, we understand Petitioner to use these terms interchangeably for purposes of its unpatentability analysis.

> IDB standard when Miesterfeld was published. Ex. 2002. A skilled artisan would not understand that Miesterfeld was referring to "IDB-C," which is a very different specification than "IDB," and which was not even published until November 27, 2001 – long after Miesterfeld was published. *See* Pet. Ex. 1032 (SAE J2366 Fact Sheet, USDOT July 12, 2006). Miesterfeld never refers to CAN directly or indirectly, and a skilled artisan would not consider that Miesterfeld discloses combining the invention with the "IDB-C" standard merely because the standard includes the "IDB" in its title. Therefore, Miesterfeld does not disclose to a skilled artisan at the time of the invention of the '843 Patent a system which includes a CAN bus. Ex. 2004 ¶¶ 25, 69, 72.

PO Resp. at 45.

Petitioner contends "IDB—by definition—runs on CAN." Pet. 68 (citing Ex. 1005 ¶¶ 85–88, 253). According to Petitioner, "[t]he IDB-C specification, entitled "SAE J2366-1 ITS Data Bus—IDB-C Physical Layer" ("IDB-C" or J2366") states that the ITS data bus physical layer should be implemented in accordance with "the CAN 2.0B specification." Reply 23 (citing Ex. 1023, 2, 15). Petitioner contends Patent Owner applies an incorrect legal standard because "35 U.S.C. 103(a) looks to whether the claimed subject matter 'would have been obvious ***at the time the invention was made*** to a person having ordinary skill in the art.'" *Id.* at 24. According to Petitioner, IDB-C was published as of the claimed priority date (December 17, 2002) and, thus, by December 2002, a person having ordinary skill in the art would have known to look to the IDB-C Specification to determine how to implement the ITS bus disclosed in Miesterfeld. *Id.* at 23–24 (citing Ex. 1037 ¶ 70).

Additionally, Petitioner contends:

> [Patent Owner] introduces an earlier version of the IDB specification published before Miesterfeld—"Standard J2355_199710" ("J2355")—

> which it contends is somehow "incompatible with CAN." Resp. 2. But J2355 expressly teaches the use of CAN. Section 5.1.4 describes implementing the ITS data bus using "[e]xisting specifications such as the emerging ***SAE CAN Task Force specification*** … may fit ITS requirements and will be considered during the standards development process." EX2002, 8. (emphasis added). Indeed, CAN is the ***only*** network protocol mentioned in J2355 for use with the ITS data bus. J2355 even refers to the forthcoming IDB-C specification (J2366), stating that "[e]volutionary changes to these requirements, the technical details of implementation, and performance specifications will be dealt with in ***SAE J2366*** and related documents." EX2002, 3 (emphasis added). Ex. 1037 ¶¶ 69, 71.

Id. at 24.

We have considered the contentions of Petitioner and Patent Owner, and we find that Petitioner presents persuasive evidence that, at the time of the invention, one of ordinary skill in the art would have understood that the Miesterfeld IDB bus is a CAN bus. Pet. 67–68 (citing Ex. 1010, 9:55–58; Ex. 1005 ¶¶ 85–88, 254–55); PO Resp. 1, 51–52 (citing Ex. 2004 ¶ 69–72); Reply 23–24 (citing Ex. 1037 ¶¶ 64–68)[13]. In particular, J2355 expressly teaches the use of CAN as it describes implementing the ITS data bus using "[e]xisting specifications such as the emerging SAE CAN Task Force specification . . . may fit ITS requirements and will be considered during the standards development process." Reply 24 (citing Ex. 2002, 8). Moreover, J2355 refers to the forthcoming IDB-C specification (J2366) stating that "[e]volutionary changes to these [J2355] requirements, the technical details of implementation, and performance specifications will be dealt with in ***SAE J2366*** and related documents (emphasis added)." *Id.* (citing Ex. 2002, 3;

[13] Petitioner cites to Ex. 1037 ¶ 70 but the context indicates the correct citation is to ¶¶ 64–68 entitled "Miesterfeld Discloses a CAN Bus."

Ex. 1037 ¶68).[14] We find Petitioner presents persuasive evidence that, contrary to Patent Owner's contention, J2355 is not incompatible with CAN. *Id.*

Regarding "[a] second interface for interfacing with the second network," Petitioner contends Miesterfeld discloses a VDB interface ("second interface") that interfaces with a VDB data bus and its interconnected devices ("second network"), as shown in Petitioner's annotated Figure 1 of Miesterfeld, below. Pet. 68–70.

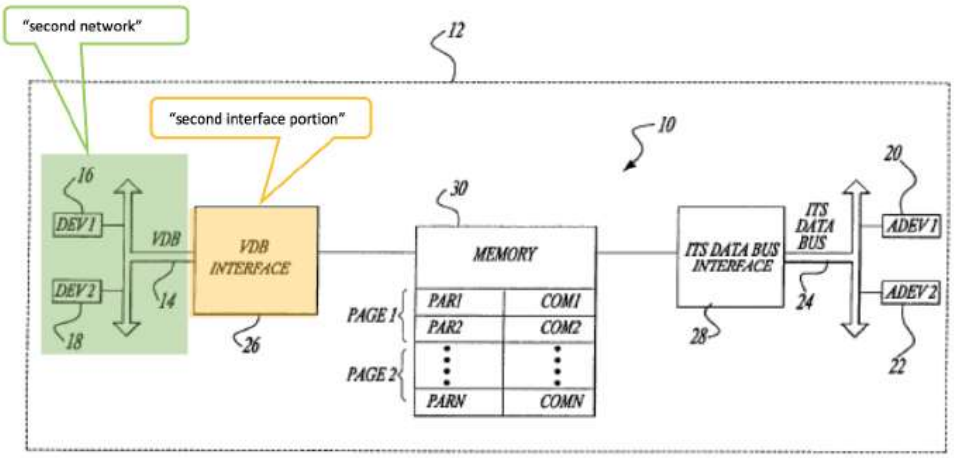

Fig-1

Figure 1 depicts a block diagram of a gateway system.

Regarding "the second interface including," Petitioner contends this limitation is an analog to "the first interface including," discussed *supra*, and contends Miesterfeld discloses that information to be stored in memory is first formatted into VDB data that is received by the VDB interface. Pet. 68–69 (citing Ex. 1010, 3:20–23). Petitioner contends this VDB data constitutes the "second data units" and once received, the VDB interface

[14] Petitioner cites to Ex. 1037 ¶¶ 69, 71 but the context indicates the correct citation is to ¶ 68.

(the "second interface-related second[15] component") processes the information for storage into memory. Pet. 69 (citing Ex.1010, 4:11–18); *see also* annotated Figure 1 (Pet. 69). We agree with Petitioner that the cited portions of Miesterfeld disclose the first and second interface limitations.

Regarding "the second network is at least one of the Controller Area Network type, the Flexray network type, or the Local Interconnect Network type," Petitioner contends Miesterfeld discloses a second network for a VDB data bus and its interconnected devices, which Miesterfeld specifies is a J1850 network. Pet. 70–74 (citing Ex.1010, 4:6-10); *see also* annotated Figure 1 (Pet.70). We agree.

Petitioner contends Miesterfeld discloses that the second network is a J1850 network "or any other industry standard as may be required." Pet. 71 (citing Ex. 1010, 4:6–10). Moreover, Petitioner contends Miesterfeld expressly directs one of ordinary skill in the art that other networks beyond J1850 may be used and one obvious replacement for a J1850 network was the Local Interconnect Network, or "LIN." Pet. 71–72 (citing Ex. 1010, 9:60–63). Petitioner further contends Wense describes the use of LIN with CAN. *Id.* (citing Ex. 1009, 13; Fig 3). We agree.

Petitioner presents rationale why one of ordinary skill in the art would have combined Miesterfeld, Stewart, and Wense. Pet. 59–62, 74–80. For example, regarding the combination of Miesterfeld and Stewart, Petitioner contends, *inter alia*, both relate to real-time distributed computer control

---

[15] While Petitioner uses the term "second interface-related *first* part," the context suggests this is the "second interface-related *second* component" because it is the part of the interface that processes the information for storage. Pet. 69, annotated Figure 1; Ex. 1005 ¶¶ 259, 260.

systems with a shared memory and use similar techniques to solve the same problem (i.e., a shared memory architecture to exchange information between the hybrid control modules that make up a real-time distributed system). *Id.* at 59–60 (citing Ex. 1010, 3:15–49, 6:31–716; Ex. 1008, 6, 8, 11, 12). Regarding the combination of Miesterfeld and Wense, Petitioner contends, *inter alia*, both are in the same field of endeavor (distributed control systems in a multiplex networking environment) and the combination of their teachings would have been predictable. *Id.* at 74, 76–78 (citing Ex. 1009, 11, 12).

Patent Owner contends one of ordinary skill in the art would not have combined Miesterfeld and Stewart because Miesterfeld's handshake lines are inconsistent with Stewart. PO Resp. 48–51 (citing Ex. 1010, 3:67–4:3, 5:32–43; Ex. 2004 ¶¶ 65–68). As Petitioner contends, however, Patent Owner provides no analysis identifying any technical incompatibility. Reply 26. Additionally, we are persuaded by Petitioner's argument that handshaking and spin-locks are ordinary design choices used to arbitrate access to a stored resource. *Id.* (citing Ex. 1037 ¶¶ 75, 76).

Patent Owner contends Petitioner's assertion that LIN "was well-known to work well in applications with the CAN network" is an inadequate basis to combine Miesterfeld and Wense because Miesterfeld does not disclose a CAN network. PO Resp. 52–53 (citing Pet. 71–72; Ex. 2004 ¶¶ 74–75). We do not find Patent Owner's argument persuasive because, for the reasons explained above, we agree with Petitioner that Miesterfeld discloses the use of CAN. *See* Reply 27.

Petitioner has shown sufficiently that one of ordinary skill in the art would have combined the first and second networks (CAN and J1850) and

interfaces of Miesterfeld with known memory management techniques (as further described by Stewart). Further, Petitioner has shown sufficiently that one of ordinary skill in the art would have combined the Miesterfeld CAN network with a known second network (LIN) as described by Wense. Petitioner's reasoning is thus supported by sufficient rational underpinning. *See KSR*, 550 U.S. at 418.

In view of the above, we determine Petitioner has shown, by a preponderance of the evidence, that claim 51 is unpatentable over Miesterfeld, Stewart, and Wense.

Remaining Claims 1 and 47–50

Petitioner contends independent claim 1 is similar to claim 51 wherein the differences are that the preamble recites a "non-transitory computer-readable medium," and each of the limitations require either "computer code" or a "computer program" for performing the method. Pet. 79–80. Petitioner contends Miesterfeld discloses these limitations. *Id.* (citing Ex. 1010, 2:56–57 ("FIG. 4 is a flow diagram of the procedure for reading/writing data to the serial peripheral interface memory"); *id.* at 2:61–62 ("FIG. 6 is flow diagram of the method for processing commands for transmission on the vehicle data bus.")).

Petitioner also contends Miesterfeld describes allowing receipt of information, specifically describing how an "ITS data bus interface . . . enables data exchange between memory 30 and ITS data bus 24" and describing interconnected "ancillary devices" that "exchange data via the ITS data bus." Pet. 79–80 (citing Ex. 1010, 3:23–25, 3:56–57). Petitioner contends the ITS data bus interface stores the data received in memory. *Id.* at 3:41–42 ("Memory 30 is accessible to both VDB interface 26 and ITS

data bus interface 28 so that each interface will be able to read from and/or write to memory 30.”).

Petitioner contends independent claims 47, 48, 49, and 50 are similar to claim 51 and contends the claim 51 analysis, and the claim 1 analysis regarding receipt or receiving information, *supra*, are applicable. Pet. 80–87.

Petitioner further contends claim 50 requires the first interface-related component to receive “first signals” that are processed before the results of the processing are provided, and the second interface-related component to receive “second signals” that are processed before the results of the processing are provided. *Id.* at 85–86. Petitioner contends these limitations are disclosed by Miesterfeld, particularly as described, *supra*, in connection with the first and second interfaces of claim 51. *Id.* at 86. Petitioner contends the ITS data bus interface receives commands (first signals) from the ITS data bus, and extracts a command code and action code, storing them in separate addresses in the shared memory. *Id.* (citing Ex. 1010, 4:34–37 (“Specific memory locations are preferably allocated . . . for data/commands received from ITS data bus 56 to be transmitted to VDB 48.”); *id.* at 7:29–31, 7:50–56)). Petitioner contends the VDB data bus interface receives data (second signals) from the VDB data bus, and then extracts that data to determine whether it is pertinent to the ITS data bus interface before storing the data in specific locations in memory. Pet. 86 (citing Ex. 1010, 4:34–37, 3:20–23, 4:11–18).

We agree that the remaining claims 1 and 47–50 are similar to claim 51, discussed *supra*, and we agree Petitioner provides sufficient evidence

that these claims, like claim 51, are unpatentable over Miesterfeld, Stewart, and Wense.[16]

Having considered the *Graham* factors, we conclude that Petitioner demonstrates, by a preponderance of the evidence that claims 1 and 47–51 are unpatentable under 35 U.S.C § 103(a) over Miesterfeld, Stewart, and Wense.

Constitutionality of Inter Partes Review Proceedings

Patent Owner contends that "this IPR should be terminated and the petition dismissed because the IPR system is unconstitutional." PO Resp. 60–61. This argument is foreclosed by the Supreme Court's determination otherwise. *Oil States Energy Services, LLC v. Greene's Energy Group, LLC*, 138 S.Ct. 1365 (2018) ("In this case, we address whether inter partes review violates Article III or the Seventh Amendment of the Constitution. We hold that it violates neither.").

III. CONCLUSION

We conclude that Petitioner demonstrates, by a preponderance of the evidence, that claims 1 and 47–51 are unpatentable under 35 U.S.C. § 103(a) over Posadas, Stewart, and Wense, and unpatentable under 35 U.S.C. § 103(a) over Miesterfeld, Stewart, and Wense.

---

[16] As discussed previously, we need not address whether certain limitations of claim 47 are conditional limitations not entitled to patentable weight because we find they are disclosed by Stewart and Miesterfeld. *See* n.9, *supra*.

IV. ORDER

It is

ORDERED that claims 1 and 47–51 of U.S. Patent No. 8,566,843 B2 are held to be unpatentable; and

FURTHER ORDERED that, because this is a final written decision, parties to this proceeding seeking judicial review of our decision must comply with the notice and service requirements of 37 C.F.R. § 90.2.

PETITIONER:

James M. Glass
Brett N. Watkins
QUINN EMANUEL URQUHART & SULLIVAN, LLP
jimglass@quinnemanuel.com
brettwatkins@quinnemanuel.com

PATENT OWNER:

Thomas H. Kramer
Thomas Meagher
O'KELLY & ERNST, LLC
tkramer@oeblegal.com
tmeagher@meagheremanuel.com