US 20030043739A1

(19) United States

(12) Patent Application Publication

(10) Pub. No.: US 2003/0043739 A1

(43) Pub. Date: Mar. 6, 2003

Reinold et al.

(54) VEHICLE ACTIVE NETWORK WITH FAULT TOLERANT DEVICES

(76) Inventors: **Juergen Reinold**, Palatine, IL (US); **Donald J. Remboski**, Dearborn, MI (US)

Correspondence Address:
MOTOROLA, INC.
CORPORATE LAW DEPARTMENT - #56-238
3102 NORTH 56TH STREET
PHOENIX, AZ 85018 (US)

(21) Appl. No.: 09/943,882

(22) Filed: Aug. 31, 2001

Publication Classification

(51) Int. Cl.[7] H04J 3/14

(52) U.S. Cl. 370/228

(57) ABSTRACT

A vehicle active network (12) communicatively couples devices (14-20) within a vehicle (10). Device operation is independent of the interface (22-28) of the device (14-20) with the active network (12). Additionally, the architecture of the active network (12) provides one or more levels of communication redundancy. The architecture provides for the total integration of vehicle systems and functions, and permits plug-and-play device integration and upgradeability.

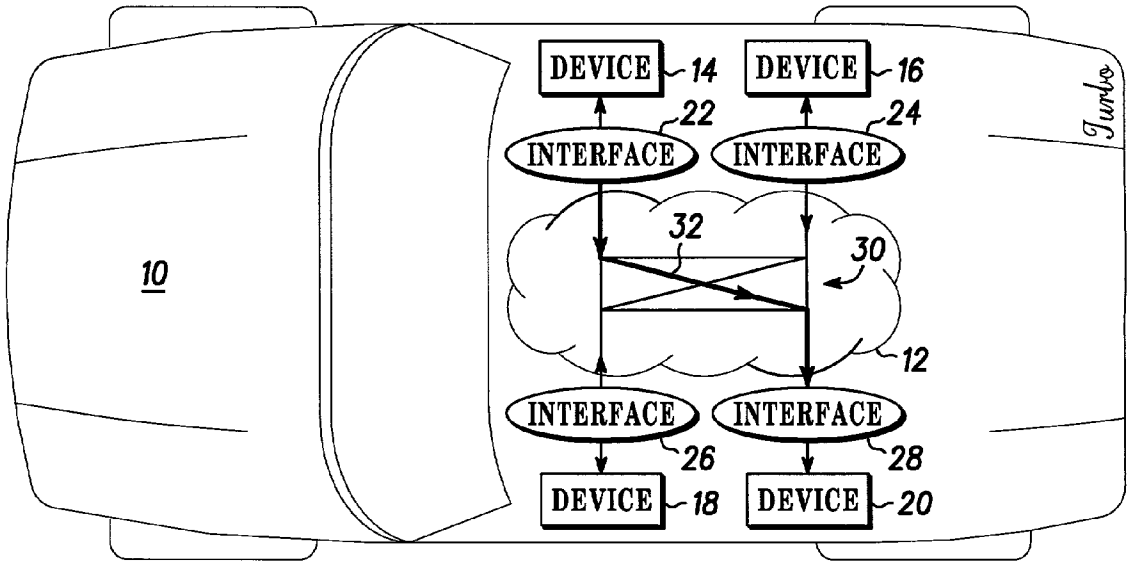

BMW EXHIBIT 1020

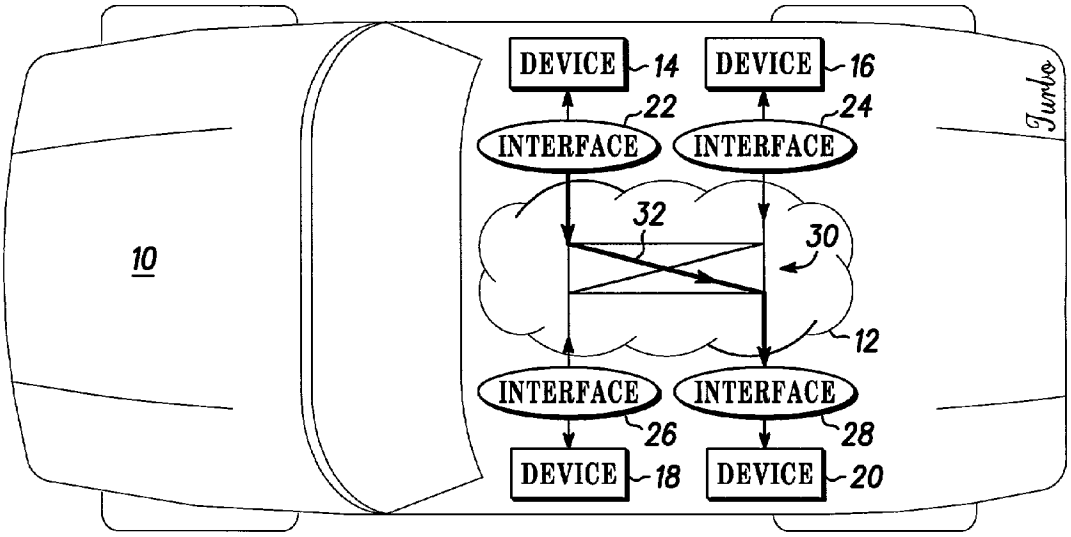
DEVICE
14
DEVICE
16
22
24
INTERFACE
INTERFACE
32
30
10
12
INTERFACE
INTERFACE
26
28
DEVICE
18
DEVICE
20
Jumbo

FIG. 1

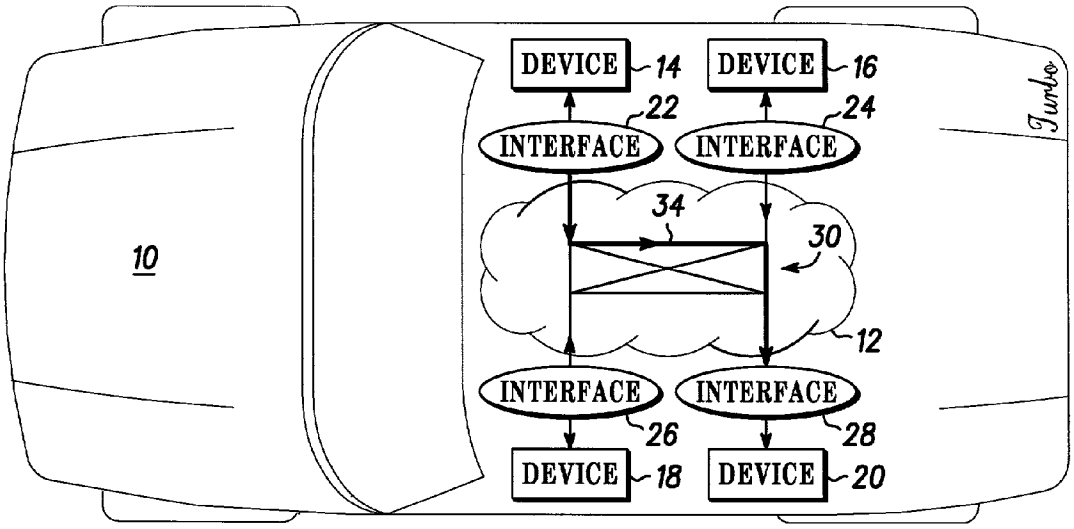
DEVICE
14
DEVICE
16
22
24
INTERFACE
INTERFACE
34
30
10
12
INTERFACE
INTERFACE
26
28
DEVICE
18
DEVICE
20
Jumbo

FIG. 2

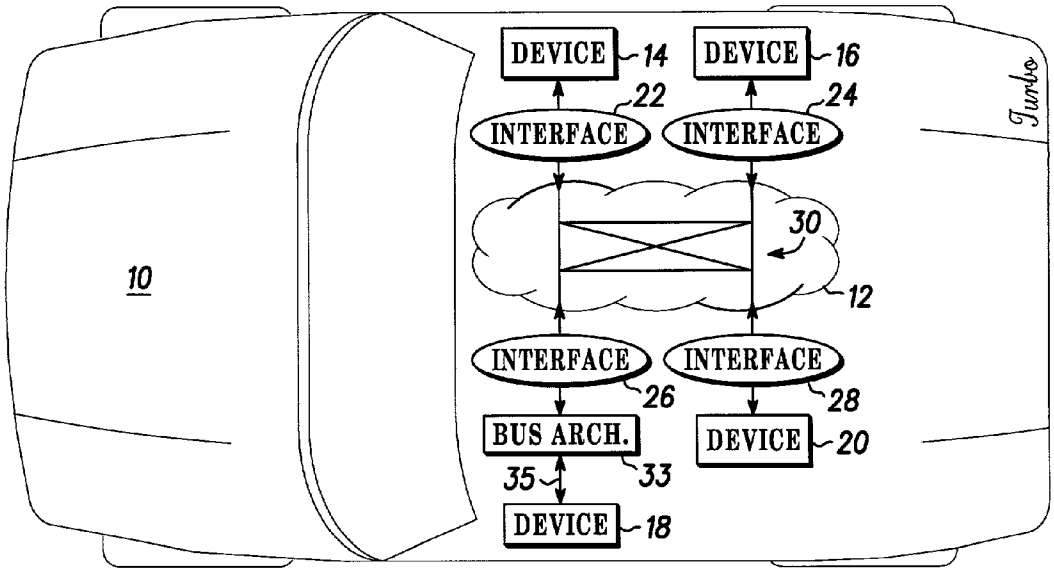

FIG. 3

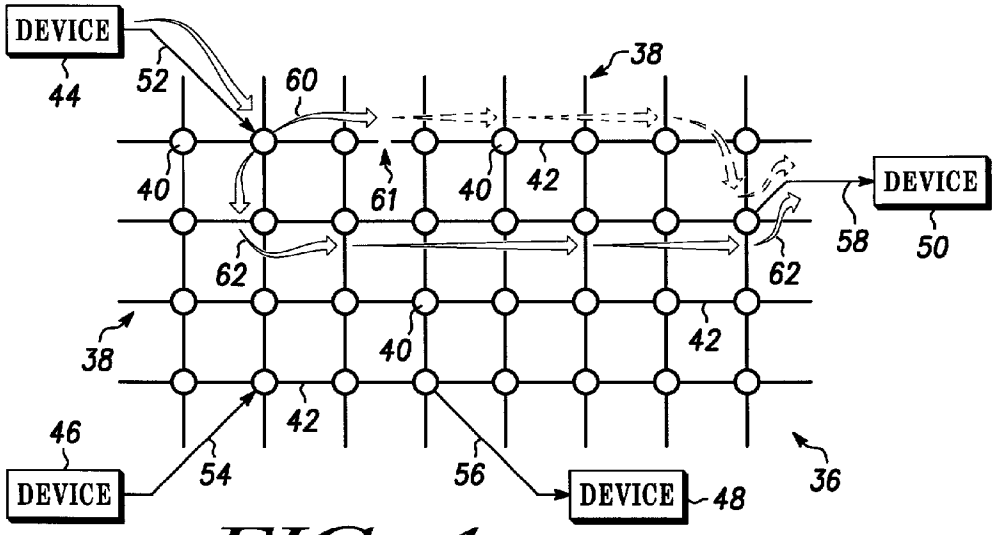

FIG. 4

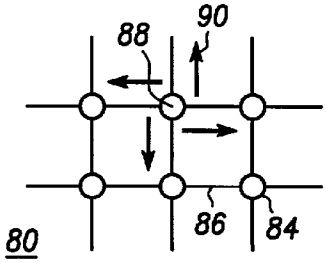

FIG. 5

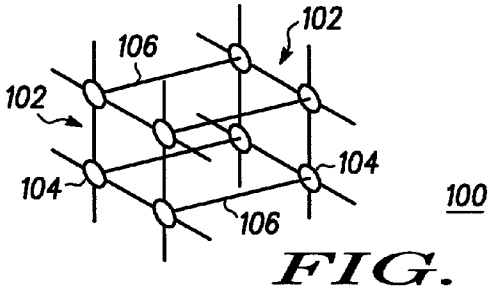

FIG. 6

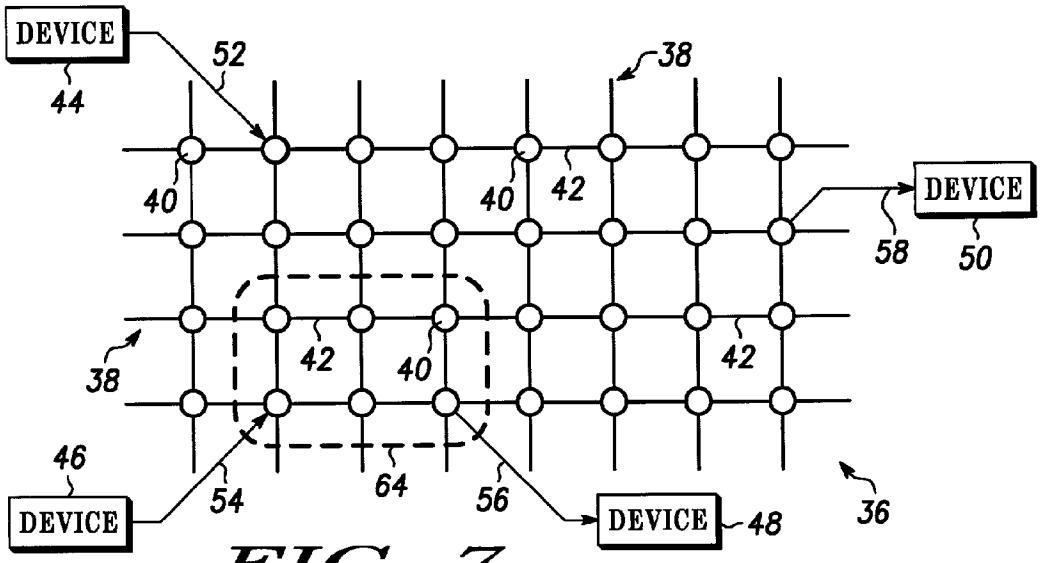

FIG. 7

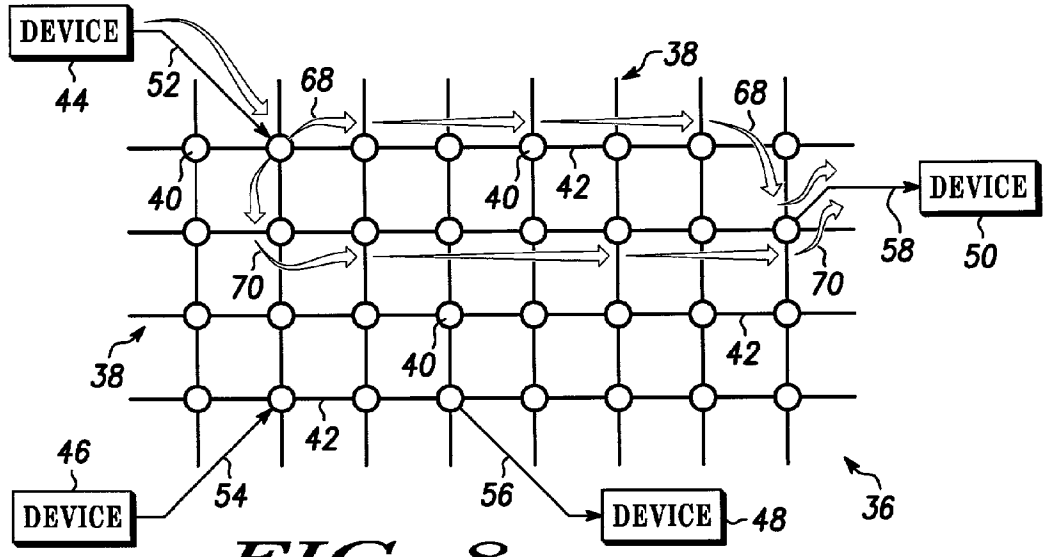

FIG. 8

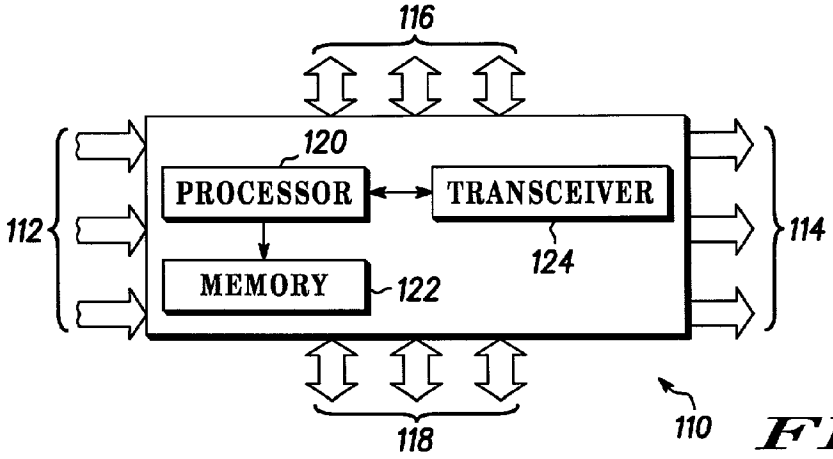

FIG. 9

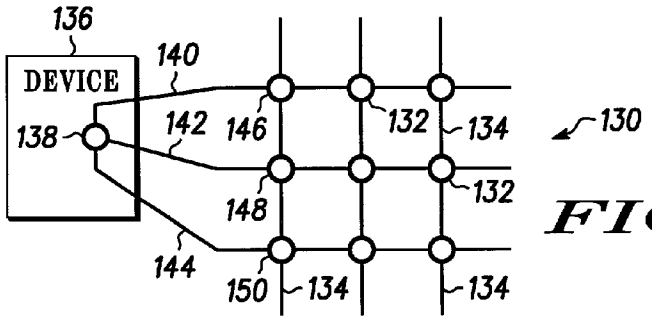

FIG. 10

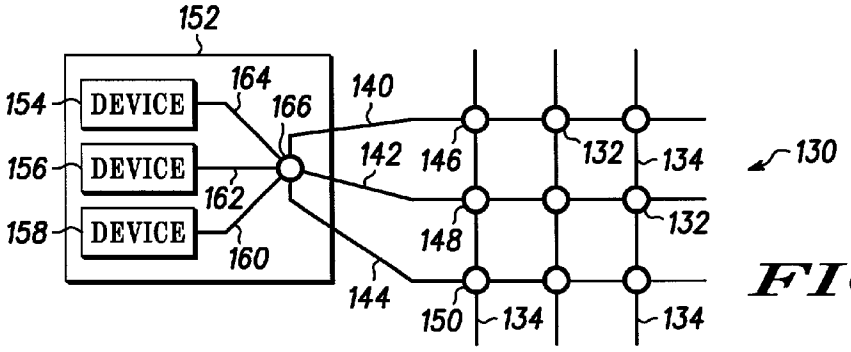

FIG. 11

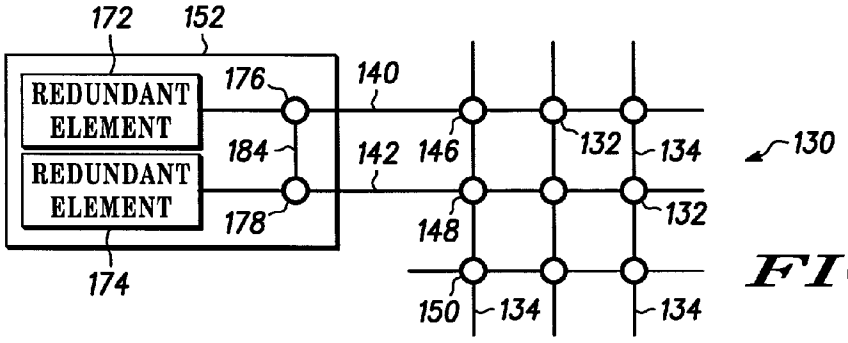

FIG. 12

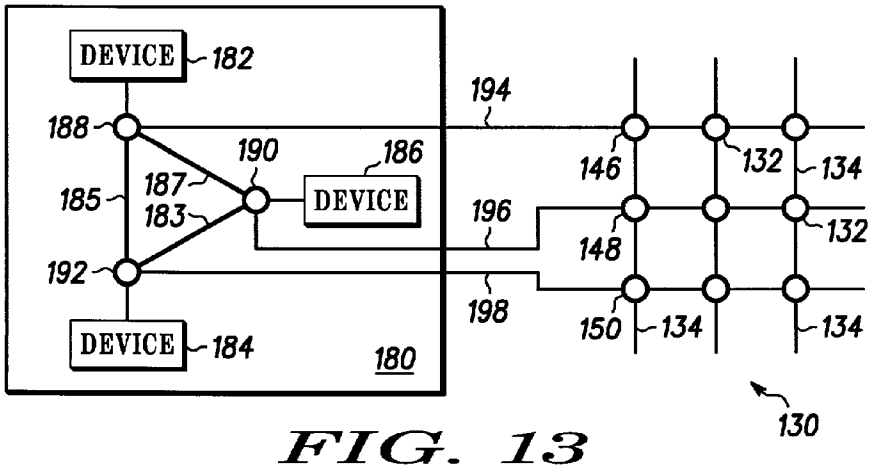

FIG. 13

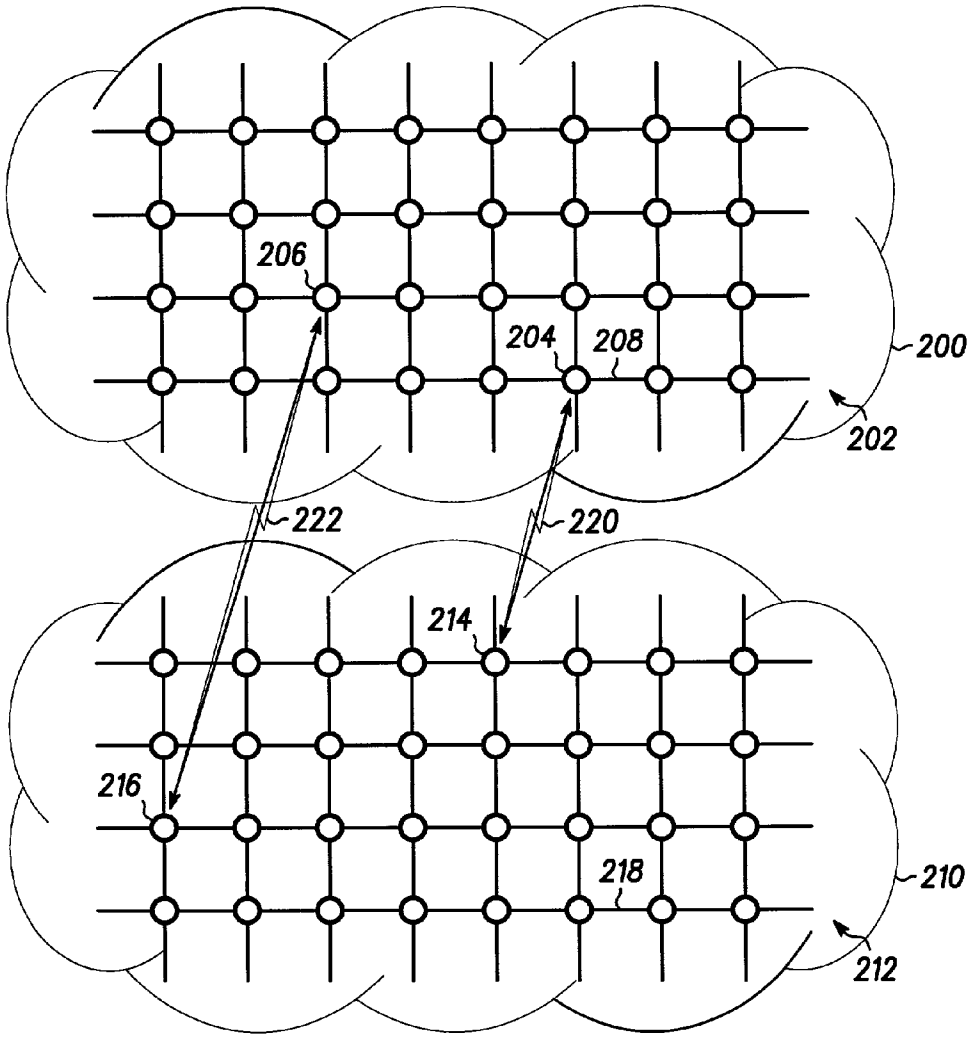
206
204
208
200
202
222
220
214
216
218
210
212

FIG. 14

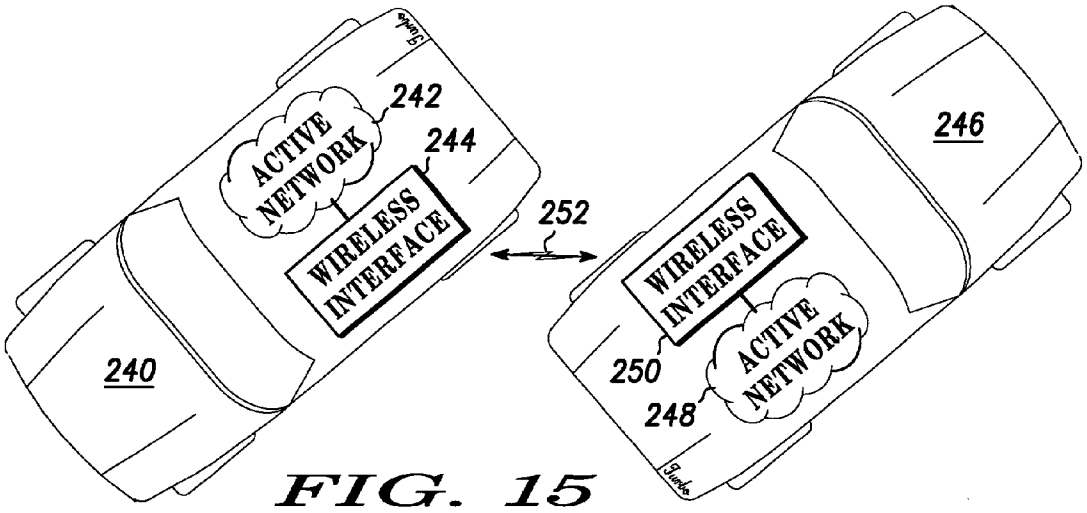
ACTIVE NETWORK
242
244
WIRELESS INTERFACE
252
240
246
WIRELESS INTERFACE
ACTIVE NETWORK
250
248

FIG. 15

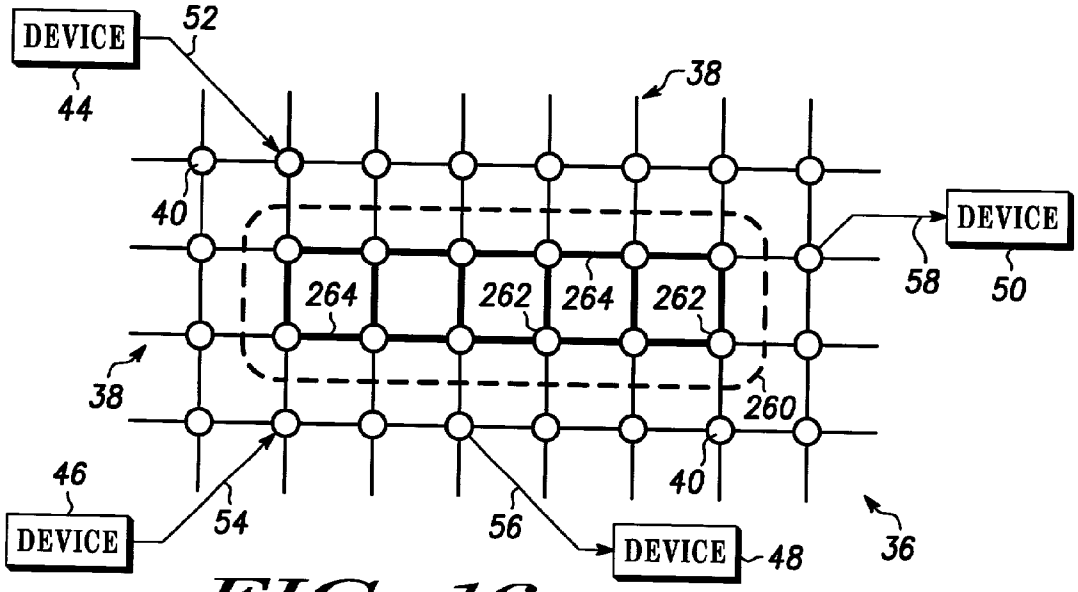
DEVICE
52
44
38
40
DEVICE
58
50
264
262
264
262
38
260
46
40
DEVICE
54
56
DEVICE
48
36

FIG. 16

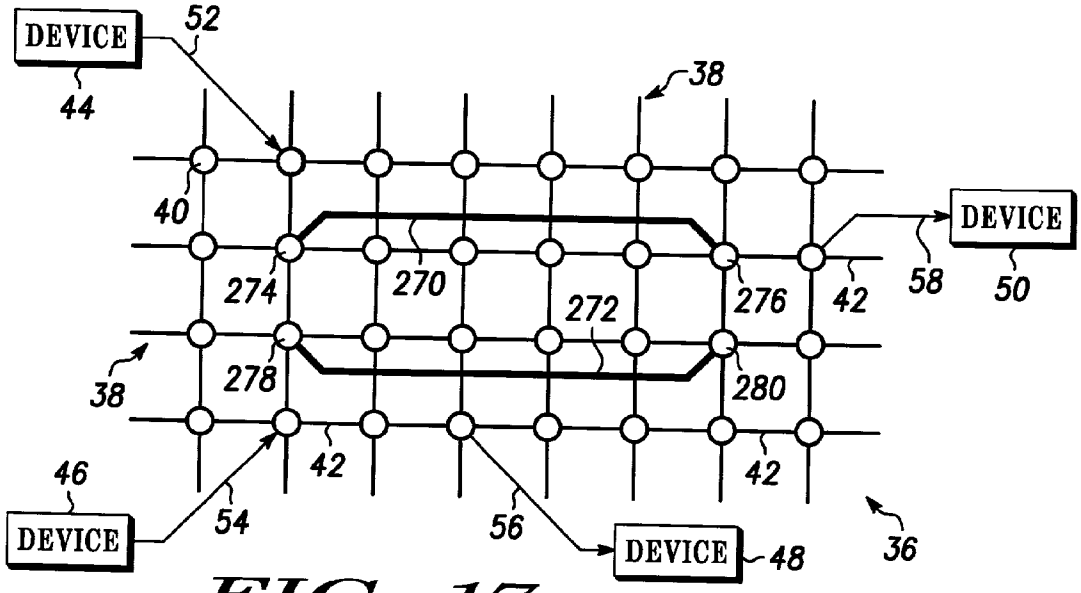
DEVICE
52
44
38
40
DEVICE
274
270
276
42
58
50
272
38
278
280
46
42
42
DEVICE
54
56
DEVICE
48
36

FIG. 17

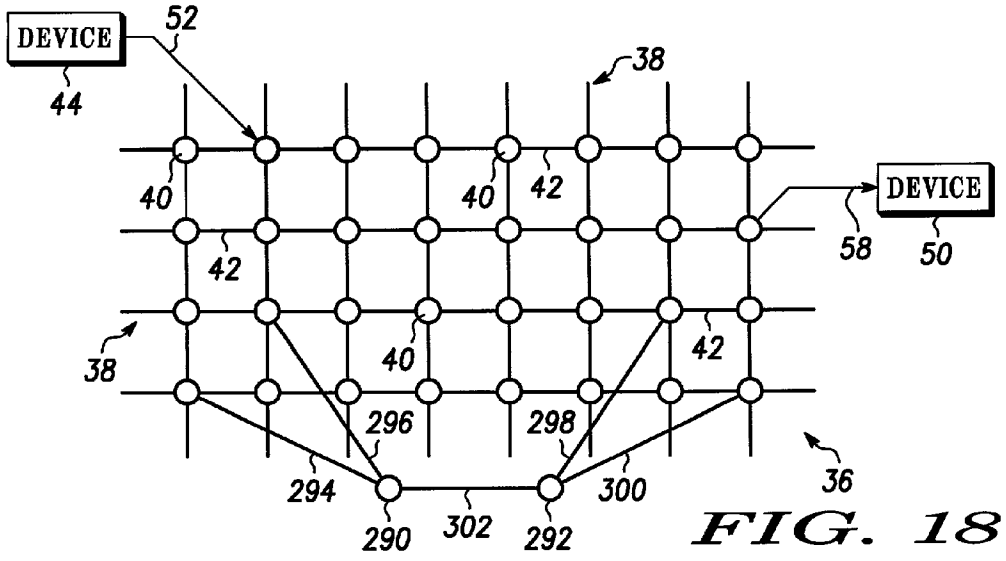

FIG. 18

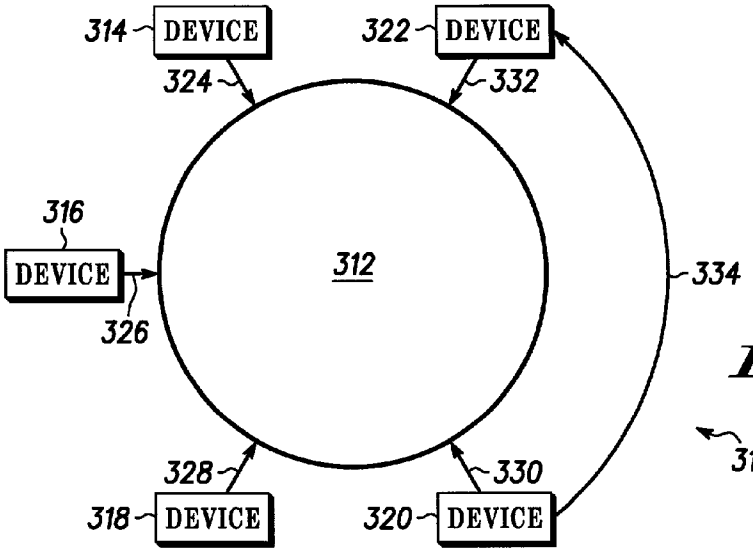

FIG. 19

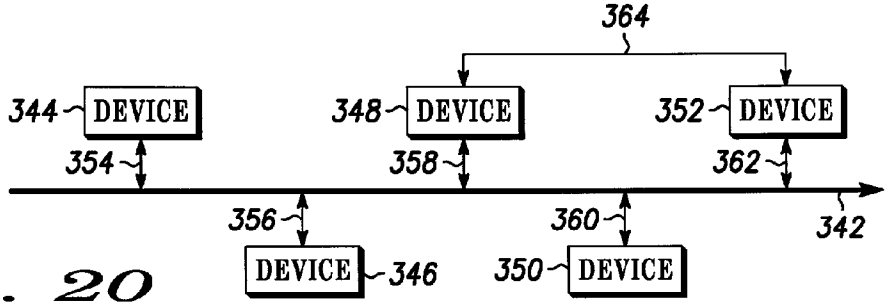

FIG. 20

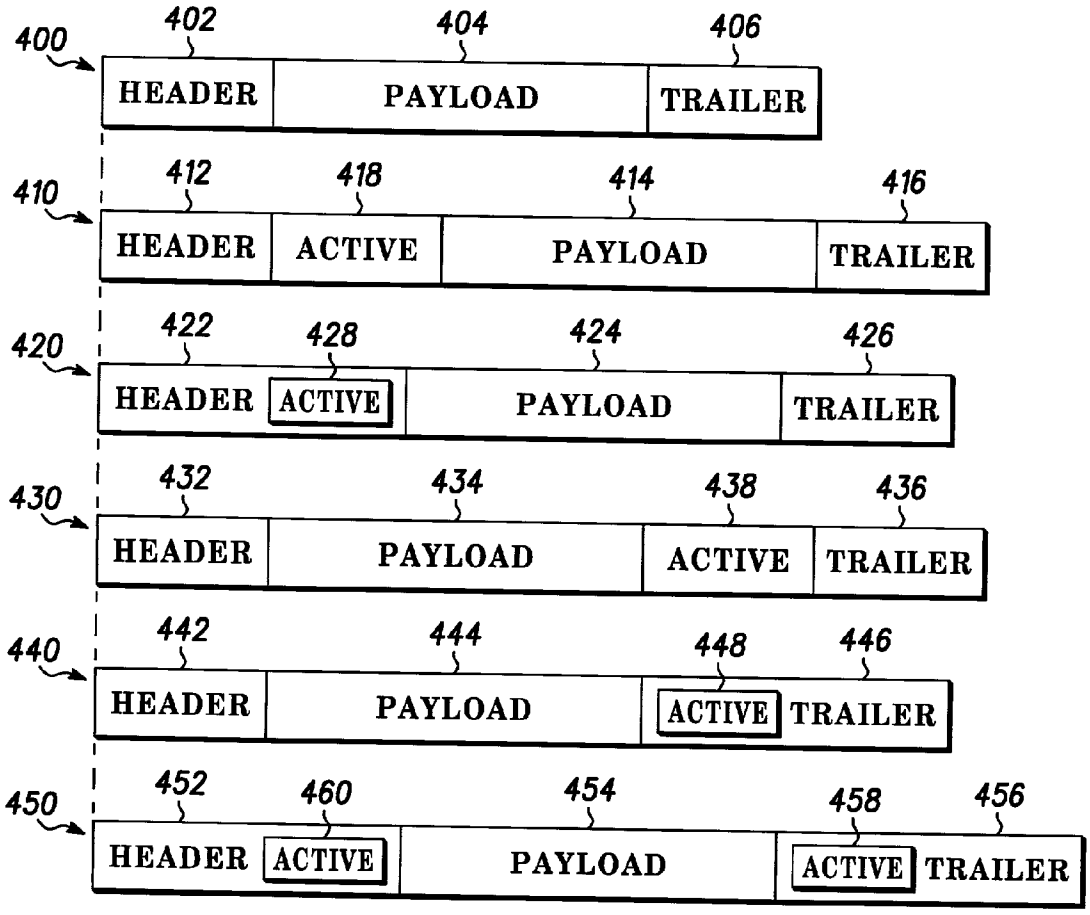
400
402
404
406
HEADER
PAYLOAD
TRAILER
410
412
418
414
416
HEADER
ACTIVE
PAYLOAD
TRAILER
420
422
428
424
426
HEADER
ACTIVE
PAYLOAD
TRAILER
430
432
434
438
436
HEADER
PAYLOAD
ACTIVE
TRAILER
440
442
444
448
446
HEADER
PAYLOAD
ACTIVE
TRAILER
450
452
460
454
458
456
HEADER
ACTIVE
PAYLOAD
ACTIVE
TRAILER

FIG. 21

VEHICLE ACTIVE NETWORK WITH FAULT TOLERANT DEVICES

BACKGROUND OF THE INVENTION

[0001] 1. Field of the Invention

[0002] The invention relates generally to the field of communication systems for vehicles such as automobiles and trucks, and more particularly, to communicatively coupling devices within the vehicle.

[0003] 2. Description of the Related Art

[0004] Microprocessor technology has greatly improved the efficiency, reliability and safety of the automobile. Microprocessor devices have enabled airbags, anti-lock brakes, traction control, adaptive suspension and power train control just to name a few of the areas where processing technology has literally transformed the automobile. These systems, first provided by manufacturers only on the most expensive luxury and performance automobiles, are now common and even standard equipment on the most affordable economy models. Soon, control-by-wire applications will become equally commonplace. For example, throttle-by-wire has been successfully implemented on a number of vehicle platforms. Steer-by-wire and brake-by-wire applications are not far behind. Alternative fuel vehicles, including fuel cell vehicles, electric and hybrid vehicles will require still more sophisticated control applications, and hence still more processing capability.

[0005] The automobile is simultaneously being enhanced by information technology. Satellite navigation systems, voice and data communications, and vehicle telemetry systems inform the driver, entertain the passengers and monitor vehicle performance. These systems can provide driving directions, identify points of interest along the driver's route, remotely diagnose and/or predict vehicle problems, unlock the doors, disable the vehicle if stolen or summon emergency personnel in the event of an accident.

[0006] The growing amount and level of sophistication of vehicle oriented information technology presents the challenge to the automotive engineer to implement and integrate these technologies with existing and emerging vehicle systems in an efficient manner. Current design philosophy centers on the incorporation of one or more vehicle communication bus structures for interconnecting the various control elements, sensors, actuators and the like within the vehicle. The design of these bus structures is often driven by compliance with governmental regulations such as second-generation on-board diagnostics (OBD-II) and federal motor vehicle safety standards (FMVSS). These structures offer limited ability to adapt new technology to the vehicle. Moreover, given the typical four-year design cycle and ten-year life cycle of an automobile, the technology within a vehicle may become significantly obsolete even before the vehicle is brought to market, and the bus architecture leaves the owner little ability to adapt new technology to the vehicle. Notwithstanding these limitations, the bus architecture offers a generally reliable, relatively fast platform for linking electronic devices and systems within the vehicle.

[0007] To link vehicle system technologies with vehicle information technologies, there has been proposed to incorporate a network architecture within the vehicle. For example, published Patent Cooperation Treaty (PCT) application number WO 00/77620 A2 describes an architecture based on the Ethernet wherein devices within the vehicle are coupled to the network. This publication describes a network including a cable backbone to which the devices are coupled and a network utility for controlling communications between the devices over the network. Important to note is that the proposed network does not integrate the vehicle systems, but instead is adapted to provide a platform for adding information technologies, such as pagers, personal digital assistants, navigations, etc. technologies to the vehicle. The power train, suspension, braking and airbag systems, as examples, utilize a vehicle bus for data communications, and these systems operate autonomously of the network described in the publication. A bridge or gateway is provide to couple the vehicle bus to the network as a device or client allowing data sharing between the bus and the network, but the data communication needs of the vehicle systems are not serviced by the network. A reason that these systems are designed to operate autonomously of the described network is that they have time critical, system critical data requirements that cannot be met by the network structure described. Additionally, the network described in the publication suffers from numerous single points of failure, such as if the cable backbone is disrupted or the network utility fails.

[0008] Thus there is a need for an architecture for automotive electronic systems that facilitates the efficient, reliable integration of in-vehicle electronic technologies and plug-and-play upgradeability.

BRIEF DESCRIPTION OF THE DRAWINGS

[0009] The invention is described in terms of the several preferred embodiments set out fully below and with reference to the following drawings in which like reference numerals are used to refer to like elements through out.

[0010] **FIG. 1** is a block diagram illustration of an embodiment of a vehicle active network according to the invention.

[0011] **FIG. 2** is a block diagram illustration of the vehicle active network shown in **FIG. 1** illustrating multiple communication path capability of the vehicle active network.

[0012] **FIG. 3** is a block diagram illustration of an alternate embodiment of a vehicle active network.

[0013] **FIG. 4** is a graphic illustration of an embodiment of the vehicle active network according to the invention.

[0014] **FIG. 5** is a graphic illustration of a portion of the vehicle active network illustrated in **FIG. 4** illustrating propagation of timing information throughout the network.

[0015] **FIG. 6** is a graphic illustration of an alternate embodiment of a three-dimensional vehicle active network.

[0016] **FIG. 7** is a graphic illustration of an alternate embodiment of a vehicle active network according to the invention incorporating a No-Go zone.

[0017] **FIG. 8** is a graphic illustration of an embodiment of a vehicle active network according to the invention providing packet redundancy.

[0018] **FIG. 9** is a schematic illustration of an embodiment of an active network element according to the invention.

[0019] **FIG. 10** is a schematic illustration of an embodiment of a vehicle active network including a device forming a portion of the vehicle active network.

[0020] **FIG. 11** is a schematic illustration of an alternate embodiment of a vehicle active network including a device forming a portion of the vehicle active element.

[0021] **FIG. 12** is a schematic illustration of an alternate embodiment of a vehicle active network including a device forming a portion of the vehicle active element.

[0022] **FIG. 13** is a schematic illustration of an alternate embodiment of a vehicle active network including a device forming a portion of the vehicle active element.

[0023] **FIG. 14** is a block diagram illustration of linked active networks according to an alternate embodiment of the invention.

[0024] **FIG. 15** is a block diagram illustration of linked active networks according to an alternate embodiment of the invention.

[0025] **FIG. 16** is a graphic illustration of an alternate embodiment of a vehicle active network according to the invention incorporating a core portion.

[0026] **FIG. 17** is a graphic illustration of an alternate embodiment of a vehicle active network illustrating adaptable scalability.

[0027] **FIG. 18** is a graphic illustration of an alternate embodiment of a vehicle active network illustrating adaptable scalability.

[0028] **FIG. 19** is a block diagram illustration of a topology for a vehicle active network according to a preferred embodiment of the invention.

[0029] **FIG. 20** is a block diagram illustration of a topology for a vehicle active network according to an alternate preferred embodiment of the invention.

[0030] **FIG. 21** illustrates various data packets that may be adapted for use with a vehicle active network according to the preferred embodiments of the invention.

DETAILED DESCRIPTION OF THE PREFERRED EMBODIMENTS

[0031] An architecture for automotive functional systems according to the invention is based upon inter-networking and computing principles. The architecture incorporates a vehicle active network for communicatively coupling devices within the vehicle. Device operation is independent of the interface of the device with the active network. Additionally, the architecture of the active network provides one or more levels of communication redundancy. The architecture provides for the total integration of vehicle systems and functions, and permits plug-and-play device integration, scalability and upgradeability.

[0032] The active network may include a plurality of communicatively coupled active elements, which permit communication between devices coupled to the active network without a network utility or arbiter. The active elements enable multiple simultaneous communication paths between devices within the vehicle. The multiple simultaneous communication paths may include a variety of potential paths among the active elements, including, for example, alternative paths responsive to network status, redundant paths or even a loop having a loop data rate different from a path data rate of other communication paths.

[0033] The active network may be based upon packet data principles and implement any suitable packet data transmission protocol. Suitable packet data protocols include, but are not limited to, transmission control protocol/Internet protocol (TCP/IP), asynchronous transfer mode (ATM), Infiniband, and RapidIO. Each of these protocols, when implemented in an active network according to the various embodiments of the invention, permits one or more levels of redundant communication capability to ensure reliable data transfer while permitting active system diagnostics and fault tolerance.

[0034] The active network may incorporate a fabric of active network elements communicatively coupling the devices. The fabric permits multiple simultaneous peer-to-peer communications. The active network elements may be arranged in, for example, an array topology, a multi-drop topology, or an asymmetric topology. Furthermore, the architecture may incorporate one or more levels of wireless communication. For example, the architecture supports peer-to-peer, one-to-many broadcast, many-to-many broadcast, intra-network and inter-network communications, device to network, vehicle-to-vehicle and vehicle to remote station wireless communications.

[0035] Many additional advantages and features of the invention will be apparent from the description of the various preferred embodiments. At the outset it is important to point out that the invention is described in terms of embodiments implemented within a vehicle, or more particularly, an automobile. The terms vehicle and automobile as used herein may include automobiles, trucks, buses, trailers, boats, airplanes, trains and the like. Therefore, references to vehicle or automobile apply equally to virtually any type of commercially available vehicle.

[0036] **FIG. 1** illustrates a vehicle **10** including an active network **12** to which various vehicle devices **14-20** are coupled via respective interfaces **22-28**. The devices may be sensors, actuators and processors used in connection with various vehicle functional systems and sub-systems, such as, but not limited to, control-by-wire applications for throttle, braking and steering control, adaptive suspension, power accessory control, communications, entertainment, and the like.

[0037] The interfaces **22-28** are any suitable interface for coupling the particular device to the active network **12**, and may be wire, optical, wireless or combinations thereof. The interfaced device is particularly adapted to provide one or more functions associated with the vehicle. These devices may be data producing, such as a sensor, data consuming, such as an actuator, or processing, which both produces and consumes data. Of course, an actuator, typically a data-consuming device, may also produce data, for example where the actuator produces data indicating it has achieved the instructed state, or a sensor may consume data, for example, where it is provided instructions for the manner of function. Data produced by or provided to a device, and carried by the active network **12**, is independent of the function of the device itself. That is, the interfaces **22-28** provide device independent data exchange between the coupled device and the active network **12**.

[0038] The active network **12** defines a plurality of communication paths **30** between the devices. The communication paths **30** permit multiple simultaneous peer-to-peer, one-to-many, many-to-many, etc. communications between the devices **14-20**. Illustrated in **FIG. 1, a** communication path **32**, illustrated by the bold arrowed lines, may be formed between device **14** and device **20**. This is not the only communication path available for communications between devices **14** and **20**. Illustrated in **FIG. 2, a** path **34** may also couple devices **14** and **20**. During operation of the vehicle **10**, data exchanged between devices **14** and **20** may utilize paths **32** and **34** or other paths between the devices. In operation, a single path may carry all of a single data communication between the device **14** and the device **20**, or several communication paths may carry portions of the data communication. Subsequent communications may use the same path or other paths as dictated by the then state of the active network **12**. This provides reliability and speed advantages over bus architectures that provide single communication paths between devices, and hence are subject to failure with failure of the single path. Moreover, communications between other of the devices **14-20** may occur simultaneously using the communication paths **30**.

[0039] The active network **12** may comply with transmission control protocol/Internet (TCP/IP), asynchronous transfer mode (ATM), Infiniband, RapidIO, or other packet data protocols. As such, the active network **12** utilizes data packets, having fixed or variable length, defined by the applicable protocol. For example, if the active network **12** uses asynchronous transfer mode (ATM) communication protocol, ATM standard data cells are used.

[0040] The devices **14-20** need not be discrete devices. Instead, the devices may be systems or subsystems of the vehicle and may include one or more legacy communication media, i.e., legacy bus architectures such as CAN, LIN, FLEXRAY or similar bus structures. In such embodiments, the respective interface **22-28** may be configured as a proxy or gateway to permit communication between the active network **12** and the legacy device **14-20**. Alternatively, and referring to **FIG. 3**, the device **18** of the vehicle **10** is communicatively coupled via an interface **35** to a bus architecture **33**. The bus architecture **33** is then coupled via the interface **26** to the active network **12**. The bus architecture may be a CAN, LIN, FLEXRAY or similar bus structure.

[0041] Referring to **FIG. 4**, an active network **36** in accordance with an alternate embodiment of the invention includes a fabric **38** of active network elements **40** communicatively coupling a plurality of devices **44-50** via respective interfaces **52-58**. Connection media **42** interconnects the active network elements **40**. The connection media **42** may be bounded media, such as wire or optical fiber, unbounded media, such as free optical or radio frequency, or combinations thereof. In addition, the term active network element is used broadly in connection with the definition of the fabric **38** to include any number of intelligent structures for communicating data packets within the active network **36** without an arbiter or other network controller and may include: switches, intelligent switches, routers, bridges, gateways and the like. Data is thus carried through the network **36** in data packet form guided by the active elements **40**.

[0042] The cooperation of the active elements **40** and the connection media **42** define a plurality of communication paths between the devices **44-50** that are communicatively coupled to the active network **36**. For example, a route **60** defines a communication path from device **44** to device **50**. If there is a disruption **61** along the route **60** inhibiting communication of the data packets from the device **44** to the device **50**, for example, if one or active elements are at capacity or have become disabled or there is a disruption in the connection media joining the active elements along the route **60**, a new route, illustrated as route **62**, can be used. Route **62** may be dynamically generated or previously defined as a possible communication path, to ensure the communication between the device **44** and the device **50**.

[0043] In some applications, it may be necessary to provide synchronized activity, which requires timing information be available within the active network. **FIG. 5** illustrates a portion **80** of an active network that includes a fabric **82** of active elements **84**. Connection media **86** interconnects the active elements **84**. Active element **88** is defined as a root node or a root element. A spanning tree algorithm may be used in association with the active network to define the plurality of communication paths available within the active network. The plurality of communication paths may be defined by the spanning tree algorithm during an initial configuration, or may be defined by a running of the spanning tree algorithm during each power on cycle or by other periodic running of the spanning tree algorithm. Timing may be propagated from the root node element **88** in the form of timing messages **90** from the root node, active element **88**, to each of the active elements **84** via the plurality of communication paths. From the root node, the spans of connecting media **86** between each active element **84**, and hence any delay in clock cycles in such spans, is known, and therefore from the root node precise timing may be established at each of the active elements **84** and likewise at each of the devices coupled to the active network. Timing within the active network may be absolute, or may be differential.

[0044] Differential, or relative, timing is possible based on the configuration of the active network and the data packets. The point-to-point connections within the active network allow accurate calculation of time to traverse the network. Thus, one is able to know when a packet was generated based upon the point in the network it started at, the route it took, and when it arrived at the current point. The time the packet was generated is thus, "now" minus x units of time, where the x units of time is the known time based on the route. In this scenario for timing, a central or root node may not be required.

[0045] Timing information within the network may degrade, for example as the result of clock skew. Having the root node send periodic timing messages refreshes the timing information. Data packets communicated within the active network may also contain timing information allowing individual devices to update the timing information on an ongoing basis. Of course, the data packets may also contain timing information to indicate when certain activities are to take place, or to indicate the freshness of the information. Other methods for establishing timing within the active networks apart from the root node concept may be employed.

[0046] **FIG. 6** illustrates an active network **100** including a fabric **102** of active network elements **104** arranged in a

three-dimensional configuration. Connection media **106** communicatively couples the active network elements **104**. The connection media may be wire, optical, radio frequency or combinations thereof. The three-dimensional configuration of fabric **102** may be used in connection with virtually any of the embodiments of an active network in accordance with the invention, and demonstrates the flexibility and scalability of such active networks.

[**0047**] **FIG. 7** illustrates the active network **36** (**FIG. 4**) modified to include a No-Go zone **64**. The No-Go zone **64** exclusively reserves a portion of the fabric **38**, namely the active elements and connection media contained within the No-Go zone **64**, for communication of data between device **46** and the device **48**. The No-Go zone **64** may reserve a sufficient portion of the fabric **38** to provide a plurality of possible communication paths between the devices **46** and **48**, or may reserve a single communication path. The No-Go zone **64** may be configured to carry data packets to/from the device **46** and to/from the device **48** to the exclusion of any other data packets. Alternatively, the No-Go zone **64** may be available for communication of data packets to/from any device provided that data packets to/from devices **46** and **48** have transmission priority. Still further, criteria may be established relating to the use of the No-Go zone **64** to transmit data to/from devices other than devices **46** and **48**. For example, where a fault in the switch fabric requires use of the No-Go zone **64** or where the non-exclusive use of the No-Go zone **64** does not exceed a threshold percentage of the overall capacity of the No-Go zone.

[**0048**] The No-Go zone **64** provides assured communication capability between the devices associated with the No-Go zone **64**. For example, if the devices **46** and **48** are associated with a steer-by-wire application, proper vehicle function requires that the data for this application be transmitted to the appropriate devices. Providing priority to the data packets associated with the steer-by-wire application and transmitting them within the switch fabric **38** generally may not sufficiently ensure the data packets are timely delivered. However, reserving a portion of the switch fabric **38**, i.e., the No-Go zone **64**, provides the advantages of a hard connection between the devices while preserving the flexibility of utilizing the entire switch fabric **38**, if needed, should a fault occur within the No-Go zone **64**. While described in connection with the active network **36** illustrated in **FIG. 4**, the concept of the No-Go zone may be applied to any of the active network architectures contemplated by the invention, including those shown in the embodiments illustrated in **FIGS. 1 and 2**. Furthermore, while the No-Go zone **64** is shown as two-dimensional in **FIG. 7**, the No-Go zone **64** may correspond in dimension to that of the fabric of active network elements. Also, the No-Go zone **64** may be dynamically redefined during operation of the vehicle.

[**0049**] The multi-path architecture of the active network **12** and the active network **36** permits fault tolerance and fault diagnosis to be easily incorporated via data stream replication. Fault tolerance may be provided using replicated data packets sent along the same communication path or multiple data paths. An embodiment wherein data packets are replicated and transmitted along redundant paths is illustrated in **FIG. 8**, which again depicts the active network **36**. Device **46** is communicatively coupled to the fabric **38** by interface **54**. At switch element **66**, data packets received from the device **44** are replicated, forming two streams of data packets (data streams). Of course more than two data streams may be generated, and additional data streams add additional levels of redundancy. The data streams are transmitted from the device **44** to the device **50** via different communication paths, and paths **68** and **70** are two of the numerous possible paths that may be formed in the switch fabric **38** from the device **46** to the device **50**. Not all data packets need to travel on the same path, and the paths **68** and **70** merely illustrate the concept of the redundant paths. The redundancy provided by the two data streams (replicated data packets) enhances reliability because a failure or disruption of one of the streams does not completely interrupt transmission of the data between the devices. Moreover, by monitoring receipt of the data streams at the device **50** it is possible to determine whether a fault exists in the fabric **38**, and to isolate the fault to a region of the fabric **38**. That is, the fault will lie on one of the two paths **68** and **70** on which the transmission of the respective data stream failed. Additionally, performance of the fabric **38** may be measured based upon time of arrival data of the two data streams.

[**0050**] **FIG. 9** illustrates an active element **110** that may be used in connection with the fabric **38**. To illustrate the functionality and the adaptability of the active element **110**, it is shown to include a plurality of input ports **112**, output ports **114** and input/output ports **116** and **118**. Various configurations of the active element **110** having more or fewer ports may be used in an active network depending on the application. The active element **110** may further include a processor **120** coupled with a memory **122**. The processor **120** includes a suitable control program for effecting the operation of the active element **110** for coupling inputs to outputs in order to transmit data packets within fabric **38**.

[**0051**] The simplex input ports **112** and output ports **114** may be adapted for optical media, while the duplex input/output ports **116** and **118** may be adapted for electrical media. Additionally, the active element **110** may include a radio frequency (RF) transceiver **124** for RF transmission of data packets to other switch elements within the switch fabric **38** and to switch elements of other active networks, for example active networks located in nearby vehicles. The switch element **110** may be an assembly of circuit components or may be formed as a single integrated circuit device.

[**0052**] **FIG. 10** illustrates an alternate embodiment providing fault tolerance and fault detection. As illustrated in **FIG. 8, a** single interface **52** couples the device **44** to the fabric **38**. Failure of the interface **52** would result in the device **44** becoming uncoupled from the fabric **38**. Referring then to **FIG. 10, a** portion **130** of a fabric, such as fabric **38**, includes a plurality of active elements **132** communicatively coupled by connecting media **134**. A device **136** is communicatively coupled to the portion **130**. The device **136** includes an active element **138** integral to the device, and providing a plurality of input/output ports. The plurality of input/output ports, three of which are illustrated in **FIG. 10**, couple to interfaces **140**, **142** and **144**. The interfaces **140**, **142** and **144** are communicatively coupled to switch elements **146**, **148** and **150**, respectively, of the portion **130**. In this manner, the device **136** is communicatively coupled via a plurality of communication paths to the portion **130** of the fabric. Data streams may be communicated along each of the communication paths to a destination device. This adds reliability by providing redundant paths from the device **136**

to the fabric. It is also possible to determine the existence and locations of faults and fabric performance by monitoring the receipt of the data streams at the destination device along each of the plurality of communication paths.

[0053] In **FIG. 11**, the device **136** of **FIG. 10** has been replaced by a sub-system **152**. The sub-system **152** includes a plurality of devices **154-158** that are coupled via interfaces **160-164**, respectively, to an active element **166** within the device **136**. The active element **166** is then coupled to the portion **130** of the fabric. The active element **166** may couple data streams from one or more of the devices **160-164** to the portion **130**. Moreover, the data streams may be coupled on multiple communication paths **140-144** to the portion **130**.

[0054] In **FIG. 12**, the device **170** includes redundant elements **172** and **174**. That is, each of elements **172** and **174** are designed to provide the required function of the device **170**. In addition to providing a vehicle-related function, the device **170** also includes device elements **176** and **178**, i.e., active network elements integrated within the device **170** which also form a portion of the active network. The device elements **176** and **178** are coupled to active elements **146** and **148** of the portion **130**. The device elements **172** and **174** are also coupled to each of the active elements **176** and **178** within the device **170** via connection media **184**. Redundant function and redundant coupling of the device **170** to the fabric is provided by this arrangement ensuring that failure of either device elements **172** or **174** and/or failure of active elements **176** and **178** and/or active elements **146** and **148** will not cause a loss of the function of the device **170**.

[0055] In **FIG. 13**, the system **180** includes devices **182**, **184** and **186**. Each of devices **182-186** may be designed to provide the same function, i.e., triple redundancy, or may provide separate functions. The system **180** also includes device elements **188-192**. The device elements **188-192** are respectively coupled to active elements **146-150** of the portion **130**. The device elements **188-192** are also coupled to each other by connection media **183-187**. Thus, triply redundant function and coupling is provided.

[0056] **FIG. 14** illustrates wireless coupling of active networks across vehicles. A first vehicle **200** includes an active network **202** including a plurality of active elements, two of which are indicated as **204** and **206**. All of the active elements, including the elements **204** and **206**, are communicatively coupled via media **208**. A second vehicle **210** includes an active network **212** including a plurality of active elements, two of which is indicated as **214** and **216**. All of these active elements, including the active elements **214** and **216**, are communicatively coupled via media **218**. Each of the active elements **204** and **206** includes wireless communication capability, and similarly, each of the active elements **214** and **216** includes wireless communication capability. For example, the active elements **204**, **206** and **214**, **216** may incorporate a radio frequency transceiver permitting these devices to communicate via radio frequency transmissions.

[0057] As shown in **FIG. 13**, the active element **204** is communicatively coupled with the active element **214** via radio frequency transmissions **220**, and the active element **206** is communicatively coupled with the active element **216** via radio frequency transmissions **222**. In this manner, multiple vehicles may be linked via the active elements disposed within the active networks. Linking the active networks in this manner effectively expands the active networks of both vehicles, and hence the number of communication paths available to link devices in any of the linked vehicles. An automobile may be communicatively coupled to a trailer that it is towing. Two vehicles traveling together can be linked in order to exchange messages, vehicle functional data, entertainment programming, etc. For example, passengers in linked vehicles may jointly play electronic games or watch video programming. A vehicle disabled because of the failure of one or more devices may be rendered operable in tandem with a rescue vehicle to which it is linked by using the functioning devices in the rescue vehicle to provide the function to both. Similarly, if a device becomes isolated in a vehicle because of a failure of a portion of the active network, communication to the device may be reestablished using a linked surrogate vehicle to provide communication paths to the isolated device.

[0058] While all of the active elements forming an active network may include radio frequency transmission capability, for inter-vehicle linking of active networks, as opposed to intra-vehicle linking of active elements, linking may be limited to selected ones of the active elements. These selected active elements may include security, authentication, encryption, etc. capability. Thus, while an active element within the vehicle may wirelessly link to virtually any other active element within the active network, active networks may be limited to linking via particular active elements. Moreover, the types and quantities of data exchanged may be limited. For linked active networks with low security and lacking encryption, the link may be limited to transmission of non-identifying vehicle operating data. For example, in a one-to-many broadcast application, a vehicle's headlights may be modulated to signal on-coming traffic about a traffic event. In this case, the signaling vehicle's headlights are a first wireless interface, and a photo-diode or similar device on the receiving vehicle is a second wireless interface. Many vehicles may report the event in this or similar fashion, and many other vehicles may receive the reported information thus establishes a many-to-many multicast.

[0059] One of the many applications of linking of active networks is the ability to upgrade systems by upgrading software within vehicles without having the vehicle return to a repair facility. Vehicles may identify upgraded software via the linking of active networks and request a copy of the upgraded software be communicated to the active network. While this process may be made seamless and transparent to the vehicle operator, safeguards may be included permitting the vehicle operator to authorize any such sharing and implementation of such upgraded software. Navigation, entertainment, and other similar program data may be shared via the inter-vehicle linking of active networks.

[0060] **FIG. 15** illustrates an alternate arrangement for wireless coupling of active networks across vehicles. A first vehicle **240** includes an active network **242** including a plurality of active elements. Coupled to the active network **242** is a wireless interface **244**. A second vehicle **246** includes an active network **248** including a plurality of active elements. The second vehicle **246** also includes a wireless interface **250**. Each wireless interface **244** and **250** includes a suitable transceiver, such as an optical or radio frequency transceiver, and each may also include processing capability and memory. The wireless interfaces **244** and **250**

arbitrate the wireless linking of the active networks **242** and **248** providing required authentication, security and encryption.

[**0061**] Referring now to **FIG. 16**, the active network **36** (**FIG. 4**) is adapted to include a core network portion **260**. The core network portion **260** includes a plurality of core active elements **262**. The core active elements **262** are communicatively coupled only to other active elements, whether core active elements **262** or other, peripheral active elements **40** forming a peripheral portion of the active network **36**. High-speed media **264** provides interconnections between core active elements **262**. In this manner, data may be transferred through the core network portion **260** at a first, high data rate, and transferred to/from devices coupled to the active network **36** at a second, slower data rate. Alternatively, the interconnection of the core active elements may be made using multiple communication links providing enhanced communication capacity. Devices are coupled to the active network via the peripheral active elements.

[**0062**] **FIG. 17** illustrates the active network **36** adapted to include "fat pipe" members **270** and **272**. Fat pipe members **270** and **272** provide direct coupling of the active element **274** to the active element **276** and the active element **278** to the active element **280**, respectively. The fat pipe members **270** and **272** may be, and generally are high speed data carrying members adapted for particular applications, and may be particularly adapted to provide scalability in an after-market arrangement, such as coupling a DVD player to a video display. In that regard, the original equipment active elements may be replaced with the active elements **274-280** capable of handling the higher data capacity of the fat pipe members **270** and **282**. Alternatively, the fat pipe members **270** and **272** may provide scalability in original equipment applications. For example, the fabric **38** may be configured for a base level of vehicle options, while premium options are provided by adding the fat pipe members **270** and **272**.

[**0063**] **FIG. 18** illustrates the active network **36** adapted with additional active elements **290** and **292** and connection media **294-302** coupling the active elements **290** and **292** to the active network **36**. **FIG. 18** illustrates the manner in which active networks in accordance with the invention may be expanded, by adding connection media and additional active elements to the fabric as needed. If necessary, existing active elements may be replaced with active elements having a sufficient number of ports to be able to add the connection media **294-302**. Moreover, the connection media **294-302** may have a higher data capacity than the existing connection media **294-302**. As will be further appreciated from the embodiments of the invention illustrated in **FIGS. 17 and 18**, the fabric including either the "fat pipe" members or the additional active elements does not need to have a uniform configuration, and may have an asymmetric configuration.

[**0064**] **FIGS. 19 and 20** illustrate alternative active network configurations. In **FIG. 19**, an active network **310** includes a ring **312** of interconnected active network elements (not depicted). A plurality of devices **314-322** is communicatively coupled by interfaces **324-332**, respectively to the ring **312** in a multi-drop arrangement. Additionally, devices **320** and **322** are coupled for peer-to-peer communications by communication link **344**. Communication link **334** may be formed of any suitable media, including wire, optical, radio frequency or combinations thereof. The device **320** therefore may communicate with the device **322** via the network **312** or directly via the peer communication link **334**.

[**0065**] In **FIG. 20**, an active network **340** includes a backbone **342** of interconnected active elements to which a plurality of devices **344-352** is communicatively coupled by interfaces **354-362**, respectively to the backbone in a multi-drop arrangement. Additionally, devices **348** and **352** are coupled for peer-to-peer communications by communication link **364**. Communication link **364** may be formed of any suitable media, including wire, optical, radio frequency or combinations thereof. The device **348** therefore may communicate with the device **352** via the network **340** or directly via the peer communication link **364**.

[**0066**] **FIG. 21** illustrates several data packet configurations that may be used in connection with active networks according to the embodiments of the invention. As described, the active networks may be configured to operate in accordance with TCP/IP, ATM, RapidIO, Infiniband and other suitable communication protocols. These data packets include structure to conform to the standard required. A typical data packet, such as the data packet **400** includes a header portion **402**, a payload portion **404** and a trailer portion **406**. As described herein, the active network and the network elements forming the active network may contain processing capability. In that regard, a data packet **410** includes along with a header portion **412**, payload portion **414** and trailer portion **416** an active portion **418**. The active portion may cause the network element to take some specific action, for example providing alternate routing of the data packet, reconfiguration of the data packet, reconfiguration of the network element, or other action, based upon the content of the active portion. The data packet **420** includes an active portion **428** integrated with the header portion **422** along with a payload portion **424** and a trailer portion **426**. The data packet **430** includes a header portion **432**, a payload portion **434** and a trailer portion **436**. An active portion **438** is also provided, disposed between the payload portion **434** and the trailer portion **436**. Alternatively, as shown by the data packet **440**, an active portion **442** may be integrated with the trailer portion **444** along with a payload portion **446** and a header portion **448**. The data packet **450** illustrates a first active portion **460** and a second active portion **458**, wherein the first active portion **460** is integrated with the header portion **452** and the second active portion **458** is integrated with the trailer portion **456**. The data packet **450** also includes a payload portion **454**. Certainly numerous other arrangements of the data packets for use with the present invention may be envisioned.

[**0067**] The data, and particularly the data packets, sent within the active network may be encrypted. The encryption function may be provided by the interface of the device to the active network, e.g., interfaces **22-28** (**FIG. 1**) or by the active network element of the active network to which the device is coupled. Data may be encrypted to ensure that it is not altered as it is communicated within the active network, which may be important for the proper function of various safety systems of the vehicle or to ensure compliance with governmental regulation. A suitable public or private key encryption algorithm may be employed, and the data may be encrypted before being packetized or the individual data

packets may be encrypted after packetization. Moreover, detecting errors in the data upon decrypting may provide an indication of an error or fault condition in the active network along the route utilized by data packet, which caused the corruption of the data packet.

[0068] The active portion of the data packet may represent a packet state. For example, the active portion may reflect a priority of the data packet based on aging time. That is, a packet initially generated may have a normal state, but for various reasons, is not promptly delivered. As the data packet ages as it is routed through the active network, the active portion can monitor time since the data packet was generated or time when the packet is required, and change the priority of the data packet accordingly. The packet state may also represent an error state, either of the data packet or of one or more elements of the active network. The active portion may also be used to messenger data unrelated to the payload within the network, track the communication path taken by the data packet through the network, provide configuration information (route, timing, etc.) to active elements of the active network, provide functional data to one or more devices coupled to the active network or provide receipt acknowledgment.

[0069] The invention has been described in terms of several embodiments, including a number of features and functions. Not all features and functions are required for every embodiment of the invention, and in this manner the invention provides an adaptable, fault tolerant, active network architecture for vehicle applications. The features discussed herein are intended to be illustrative of those features that may be implemented; however, such features should not be considered exhaustive of all possible features that may be implemented in a system configured in accordance with the embodiments of the invention.

We claim:

1. In a vehicle comprising a first device and a second device and an active network communicatively coupling the first device and the second device, the first device having a first communication coupling to the active network and a second communication coupling to the active network.

2. The vehicle of claim 1, wherein the active network comprises a plurality of active network elements coupled by connection media and wherein the first communication coupling couples to a first active network element and the second communication coupling couples to a second active network element.

3. The vehicle of claim 1, wherein the device comprises a device active network element, and wherein the first communication coupling and the second communication coupling each couple to the device active network element.

4. The vehicle of claim 1, wherein the device comprises a first device active network element and a second device active network element, and wherein the firs t communication coupling couples to the first device active network element and the second communication coupling couples to the second device active network element.

5. The vehicle of claim 4, wherein the first device active network element and the second device active network element are communicatively coupled by connection media.

6. The vehicle of claim 4, wherein the first device active network element and the second device active network element are communicatively coupled by connection media.

7. The vehicle of claim 1, wherein the device comprises a first device active network element and a second device active network element, and wherein the first communication coupling and the second communication coupling each couples to the first device active network element and the second device active network element.

8. The vehicle of claim 1, wherein the device has a first device element coupled to the first coupling and a second device element coupled to the second coupling.

9. The vehicle of claim 1, wherein active network comprises a packet data network.

10. In a vehicle comprising an active network for communications within the vehicle, a method of coupling a device to the active network comprising:

providing a first communication coupling from the device to the active network at a first location on the active network; and

providing a second communication coupling from the device to the active network at a second location on the active network.

11. The method of claim 10, wherein the active network comprises a plurality of active network elements coupled by connection media, and wherein the step of providing a first communication coupling comprises coupling the device to a first active network element of the plurality of active network elements and the step of providing a second communication coupling comprises coupling the device to a second active network element of the plurality of active network elements.

12. The method of claim 10, wherein the active network comprises a plurality of active network elements coupled by connection media, and wherein the step of providing a first communication coupling comprises coupling the device to an active network element of the plurality of active network elements and the step of providing a second communication coupling comprises coupling the device to the active network element.

13. The method of claim 10, wherein the active network comprises a plurality of active network elements coupled by connection media and the device comprises a device active network element, and wherein the step of providing a first communication coupling comprises coupling the device active network element to a first active network element of the plurality of active network elements and the step of providing a second communication coupling comprises coupling the device active network element to a second active network element of the plurality of active network elements.

14. The method of claim 10, wherein the active network comprises a plurality of active network elements coupled by connection media and the device comprises a first device active network element and a second device active network element, and wherein the step of providing a first communication coupling comprises coupling the first device active network element to a first active network element of the plurality of active network elements and the step of providing a second communication coupling comprises coupling the second device active network element to a second active network element of the plurality of active network elements.

15. The method of claim 10, wherein the active network comprises a plurality of active network elements coupled by connection media and the device comprises a first device active network element and a second device active network element, and wherein the step of providing a first commu-

nication coupling comprises coupling the first device active network element and the second device active network element to a first active network element of the plurality of active network elements and the step of providing a second communication coupling comprises coupling the first device active network element and the second device active network element to a second active network element of the plurality of active network elements.

16. The method of claim 10, wherein the active network comprises a plurality of active network elements coupled by connection media and the device comprises a first device active network element and a second device active network element, and wherein the step of providing a first communication coupling comprises coupling the first device active network element and the second device active network element to an active network element of the plurality of active network elements and the step of providing a second communication coupling comprises coupling the first device active network element and the second device active network element to the active network element.

17. The method of claim 16, wherein the steps of providing a first communication coupling and a second communication coupling comprises coupling the first device active network element to the second device active network element.

* * * * *