US006934612B2

(12) **United States Patent**
Remboski et al.

(10) **Patent No.: US 6,934,612 B2**
(45) **Date of Patent: Aug. 23, 2005**

(54) **VEHICLE NETWORK AND COMMUNICATION METHOD IN A VEHICLE NETWORK**

(75) Inventors: **Donald Remboski**, Dearborn, MI (US); **Jürgen Reinold**, Palatine, IL (US); **Patrick Jordan**, Austin, TX (US); **Walton Fehr**, Mundelein, IL (US); **Samuel M. Levenson**, Arlington Heights, IL (US); **Hai Dong**, Austin, TX (US); **Hugh Johnson**, Cedar Park, TX (US)

(73) Assignee: **Motorola, Inc.**, Schaumburg, IL (US)

(*) Notice: Subject to any disclaimer, the term of this patent is extended or adjusted under 35 U.S.C. 154(b) by 0 days.

(21) Appl. No.: **10/464,387**

(22) Filed: **Jun. 18, 2003**

(65) **Prior Publication Data**

US 2005/0004727 A1 Jan. 6, 2005

Related U.S. Application Data

(60) Provisional application No. 60/477,897, filed on Jun. 12, 2003.

(51) **Int. Cl.**[7] **H04J 3/16**

(52) **U.S. Cl.** **701/36**; 370/258; 455/452; 455/512

(58) **Field of Search** 701/35, 36, 32, 701/29; 370/503, 465, 258; 340/438, 439; 455/12.1, 33.1, 57.1, 58.1, 427, 512, 452

(56) **References Cited**

U.S. PATENT DOCUMENTS

6,356,823	B1 *	3/2002	Iannotti et al.	701/35
6,430,164	B1	8/2002	Jones et al.	
6,542,739	B1 *	4/2003	Garner	455/427
6,611,537	B1 *	8/2003	Edens et al.	370/503
6,611,755	B1 *	8/2003	Coffee et al.	701/213
2001/0001319	A1	5/2001	Beckert et al.	
2003/0045972	A1	3/2003	Remboski et al.	

OTHER PUBLICATIONS

International Search Report for Application No. PCT/US04/18587 dated Oct. 6, 2004.

* cited by examiner

Primary Examiner—Richard M. Camby
Assistant Examiner—Arthur Donnelly

(57) **ABSTRACT**

A vehicle communication network (**200**) includes a plurality of network elements (**208–212**) and a plurality of communication links (**214–230**) communicatively coupling the network elements in a point-to-point configuration. At least a portion of the plurality of communication links may be specified in accordance with a shared-access bus protocol. The plurality of communication links are arranged to communicate data packets between the network elements.

26 Claims, 6 Drawing Sheets

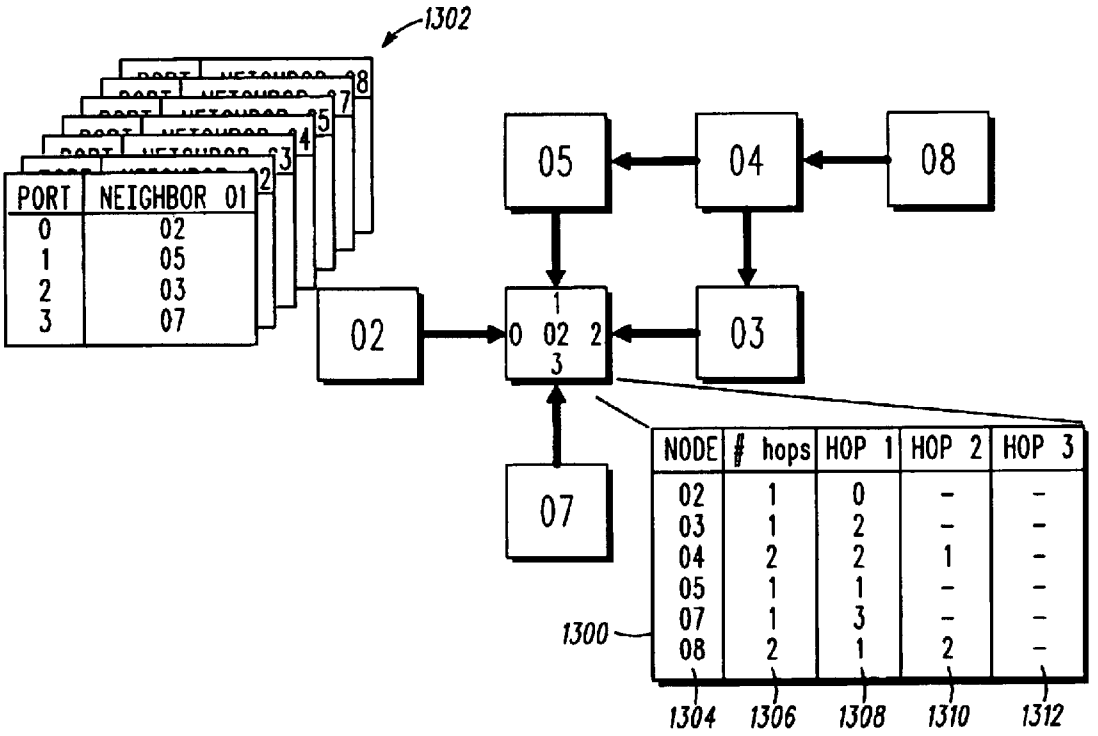

BMW EXHIBIT 1021

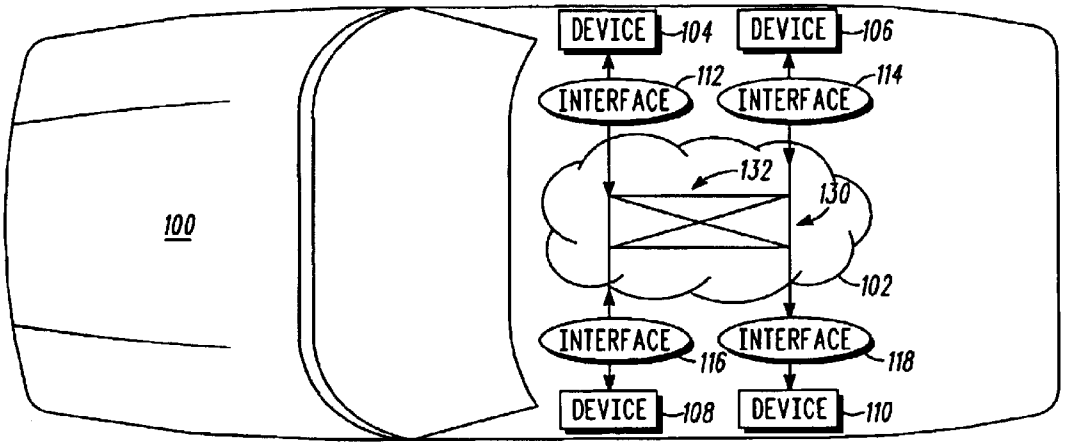
DEVICE
104
DEVICE
106
INTERFACE
112
INTERFACE
114
132
130
100
102
INTERFACE
116
INTERFACE
118
DEVICE
108
DEVICE
110

FIG. 1

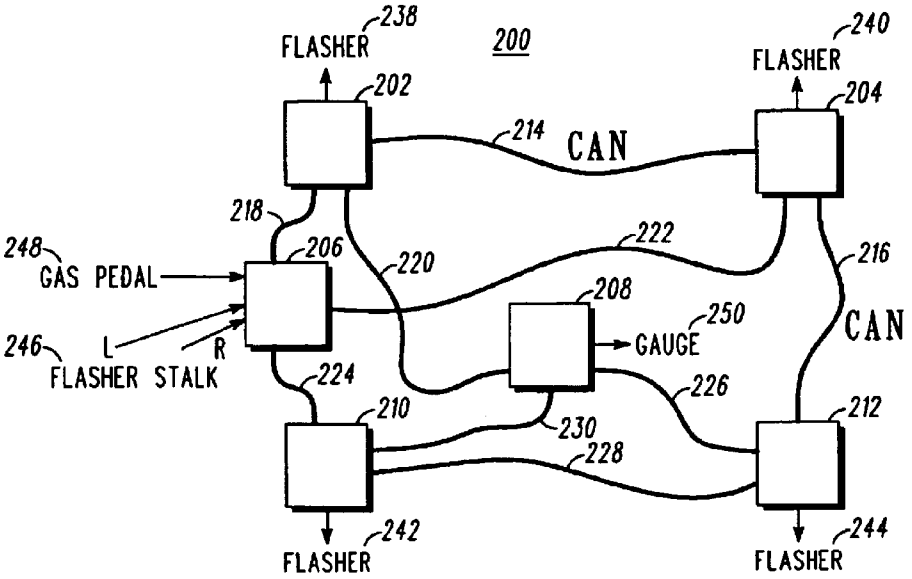
FLASHER
238
200
FLASHER
240
202
204
214
CAN
218
222
216
248
GAS PEDAL
206
220
208
250
GAUGE
CAN
246
L
R
FLASHER STALK
224
226
210
212
230
228
FLASHER
242
FLASHER
244

FIG. 2

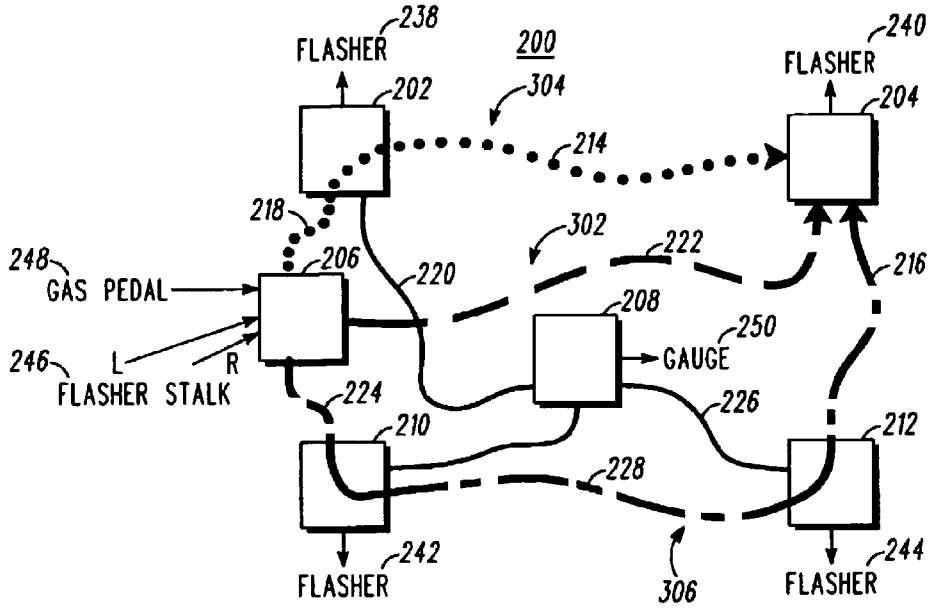
FLASHER
238
200
FLASHER
240
202
304
204
214
218
302
222
248
GAS PEDAL
206
220
216
208
250
GAUGE
246
L
R
FLASHER STALK
224
226
210
212
228
242
FLASHER
306
244
FLASHER

FIG. 3

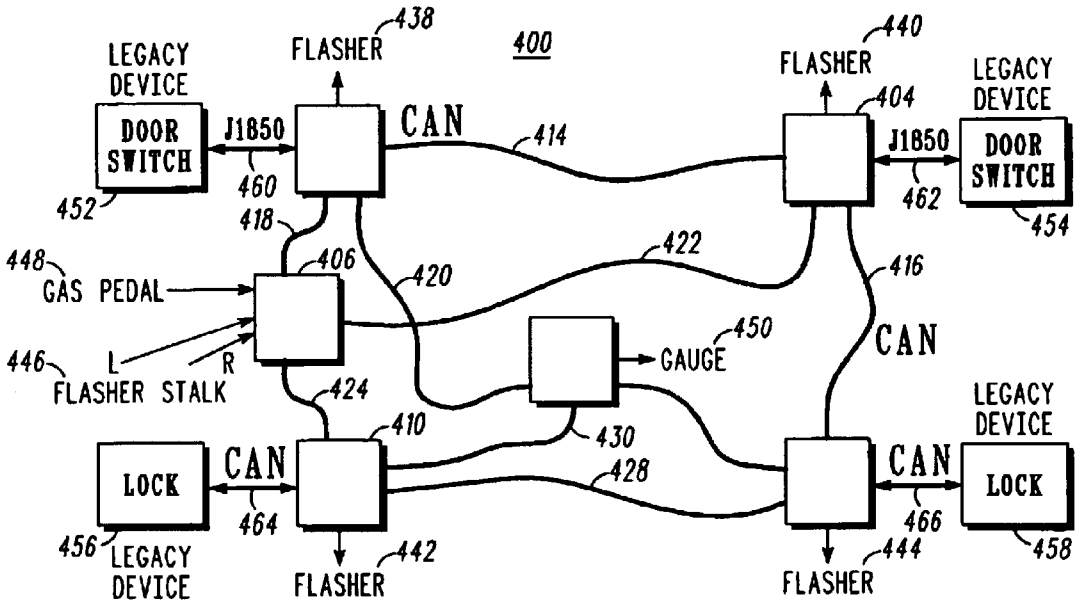
LEGACY DEVICE
FLASHER
438
400
FLASHER
440
LEGACY DEVICE
DOOR SWITCH
J1850
CAN
414
404
J1850
DOOR SWITCH
460
462
452
454
418
422
448
GAS PEDAL
406
420
416
446
L
R
FLASHER STALK
450
GAUGE
CAN
424
410
430
LEGACY DEVICE
LOCK
CAN
428
CAN
LOCK
464
466
456
LEGACY DEVICE
442
FLASHER
444
FLASHER
458

FIG. 4

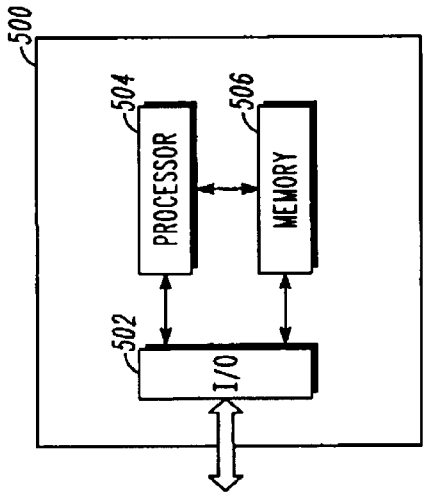
500
502
I/O
504
PROCESSOR
506
MEMORY

FIG. 5

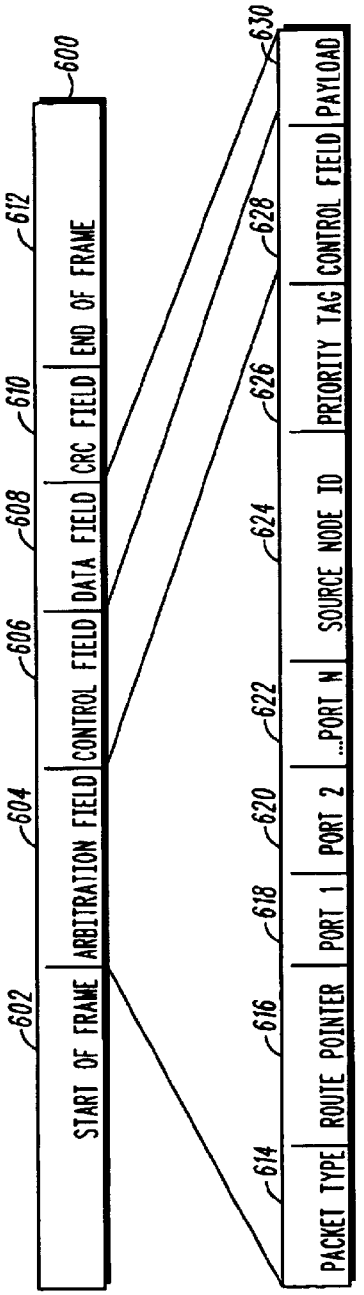
600
602
START OF FRAME
604
ARBITRATION FIELD
606
CONTROL FIELD
608
DATA FIELD
610
CRC FIELD
612
END OF FRAME
614
PACKET TYPE
616
ROUTE POINTER
618
PORT 1
620
PORT 2
622
...PORT N
624
SOURCE NODE ID
626
PRIORITY TAG
628
CONTROL FIELD
630
PAYLOAD

FIG. 6

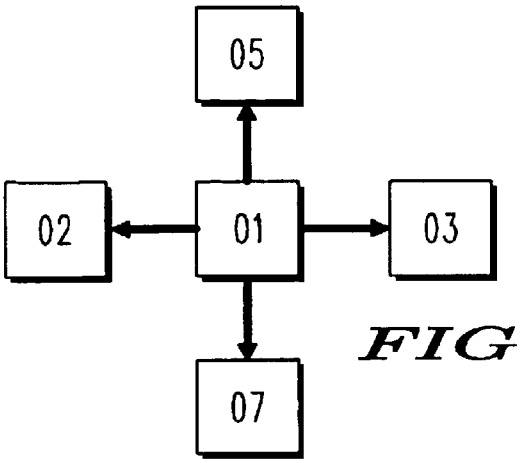

FIG. 7

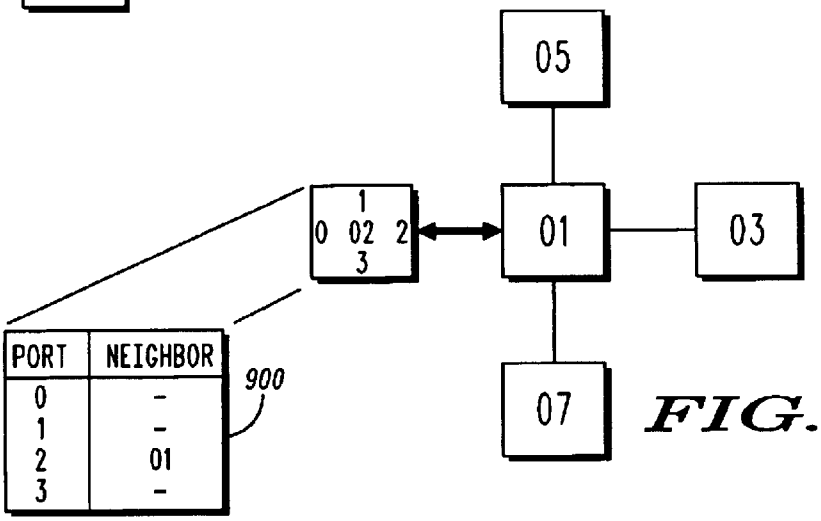

FIG. 8

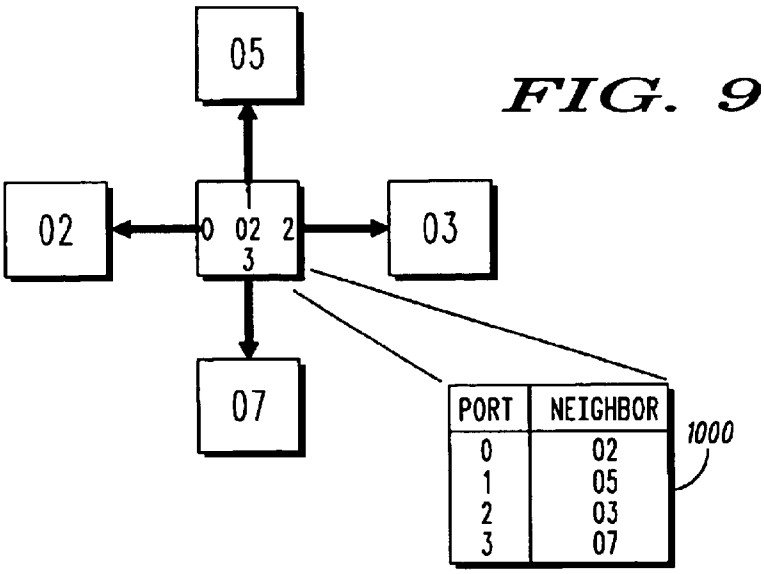

FIG. 9

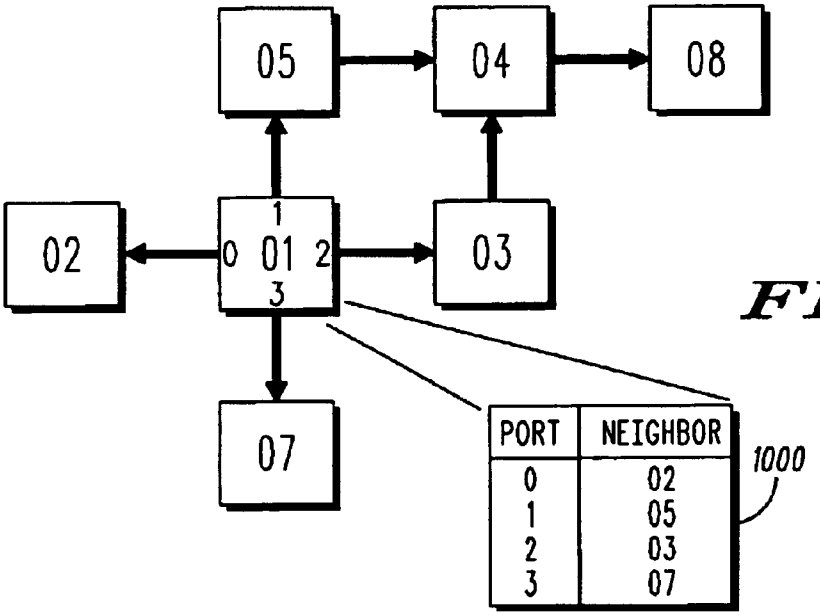
05
04
08
02
1
0 01 2
3
03
07
PORT NEIGHBOR
0 02
1 05
2 03
3 07
1000

FIG. 10

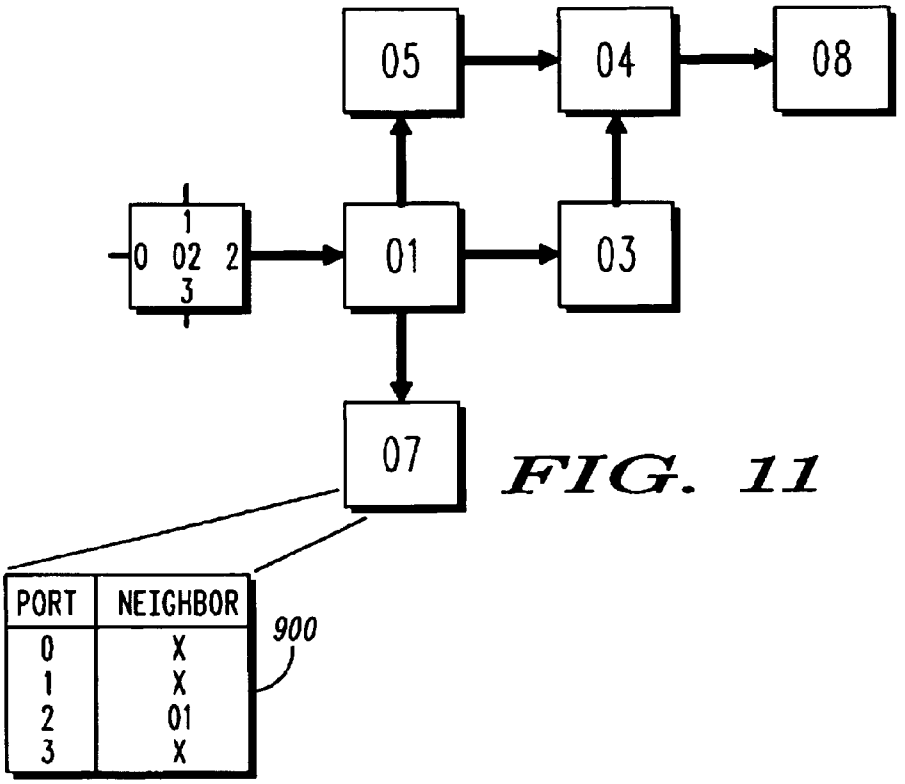
05
04
08
1
0 02 2
3
01
03
07
PORT NEIGHBOR
0 X
1 X
2 01
3 X
900

FIG. 11

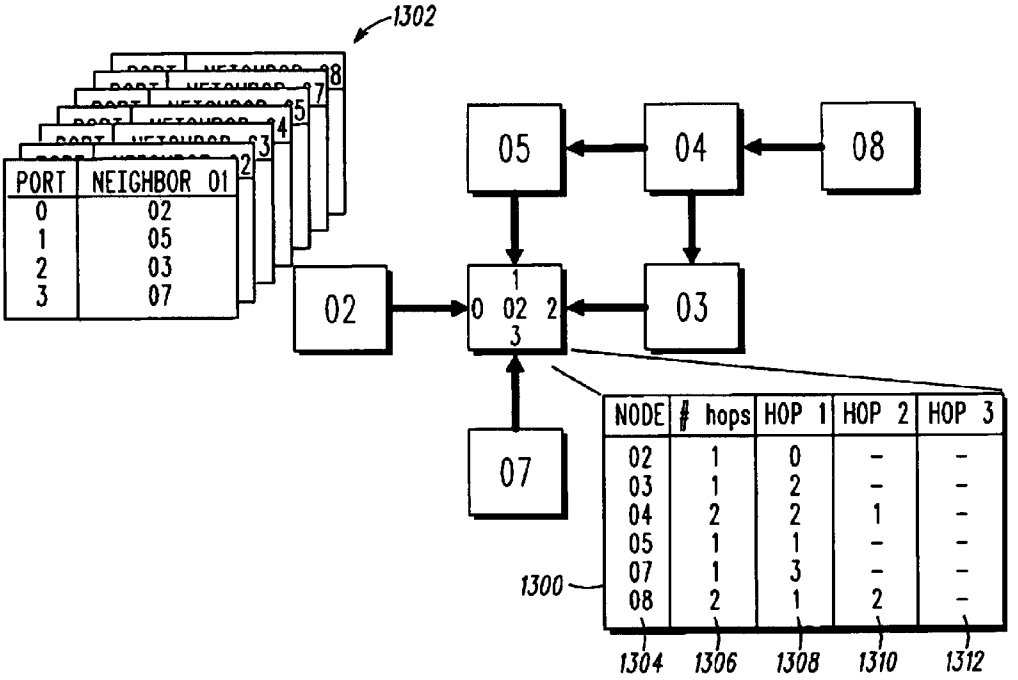
1302
PORT
NEIGHBOR 01
0
02
1
05
2
03
3
07
05
04
08
02
03
07
1
0 02 2
3
NODE
hops
HOP 1
HOP 2
HOP 3
02 1 0 - -
03 1 2 - -
04 2 2 1 -
05 1 1 - -
07 1 3 - -
08 2 1 2 -
1300
1304
1306
1308
1310
1312

FIG. 12

VEHICLE NETWORK AND COMMUNICATION METHOD IN A VEHICLE NETWORK

CROSS-REFERENCE TO RELATED APPLICATIONS

This application claims benefit under 35 U.S.C. § 119 (e) to provisional patent application Ser. No. 60/477,897 filed Jun. 12, 2003 the disclosure of which is hereby expressly incorporated herein by reference.

TECHNICAL FIELD

The present patent relates to vehicles and particularly to communication networks within vehicles.

BACKGROUND

Vehicle builders have been using serial communication (multiplexing) between controllers to share information and distribute control for some time. Doing so has greatly reduced the amount of vehicle signal wiring needed to implement the comfort, convenience, and safety features desired in modern consumer vehicles.

Control of the devices in the vehicle to implement desired features may be divided into controllers by function (powertrain, braking, steering, etc.), by location (engine compartment, seat, door, etc.) or in combinations thereof. The controller for each of the functions/zones may share information with other controllers using a shared-access serial bus. The bus usually follows an industry standard such as J1850, CAN, LIN, Flexray, MOST and the like, well known to those of skill in the art. Multiple, independent busses may be used. In that case, one of the controllers may act as a gateway for information between the incompatible busses.

An alternative architecture introduces the idea of dividing the vehicle into geographic regions and locating a single controller for all of the features in that region. This architecture may also include the concept of smart peripherals to reduce the number of interconnections in localized areas of the vehicle. The smart peripherals use simple serial communication busses such as LIN busses to relay information from sensors to the zone controller or to accept actuator commands from the zone controller. The zone controllers may be linked by a serial communication bus structure.

Another alternative architecture incorporates a junction block that can be located in various zones of the vehicle. The junction block provides a mechanical and electrical connection point for power, ground and communication for small devices that are used to interface between input and output devices. The junction block also provides over current protection devices for the small connected devices, and multiple power sources distributed at different levels within the system.

Current bus protocols are not easily scalable and are limited in bandwidth. X-by-wire functionality, multimedia infotainment, navigation and other content intensive applications will put more demands on bandwidth and quality of service (QoS) requiring marked improvements in bandwidth, speed, delay, jitter, fault tolerance, message integrity, guaranteed delivery, availability and survivability.

Therefore, there is needed new architecture, such as switch fabric network architecture, for the automotive environment that provides scalability in both capacity and redundancy, at costs on par with existing bus architecture.

BRIEF DESCRIPTION OF THE DRAWINGS

This disclosure will describe several embodiments to illustrate its broad teachings. Reference is also made to the attached drawings.

FIG. **1** is a schematic representation of a vehicle incorporating a vehicle network.

FIG. **2** is a schematic representation of a switch fabric forming a portion of a vehicle network.

FIG. **3** is a schematic representation of a switch fabric forming a portion of a vehicle network and further illustrating communication paths within the network.

FIG. **4** is a schematic representation of a switch fabric forming a portion of vehicle network and further illustrating disparate communication links.

FIG. **5** is a block diagram of a network element that may be used in the networks shown in FIGS. **1–4**.

FIG. **6** is a schematic representation of a data packet.

FIGS. **7–12** are schematic diagrams illustrating a network node discovery process that may be used with the networks illustrated in FIGS. **1–4**.

DETAILED DESCRIPTION

Although the following text sets forth a detailed description of numerous different embodiments of the invention, it should be understood that the legal scope of the invention is defined by the words of the claims set forth at the end of this patent. The detailed description is to be construed as exemplary only and does not describe every possible embodiment of the invention because describing every possible embodiment would be impractical, if not impossible. Numerous alternative embodiments could be implemented, using either current technology or technology developed after the filing date of this patent, which would still fall within the scope of the claims defining the invention. Moreover, structure, features and functions of the herein described embodiments should be considered interchangeable, and every structure, feature or function may be used with any of the embodiments herein described.

It should also be understood that, unless a term is expressly defined in this patent using the sentence "As used herein, the term '_____' is hereby defined to mean . . . " or a similar sentence, there is no intent to limit the meaning of that term, either expressly or by implication, beyond its plain or ordinary meaning, and such term should not be interpreted to be limited in scope based on any statement made in any section of this patent (other than the language of the claims). To the extent that any term recited in the claims at the end of this patent is referred to in this patent in a manner consistent with a single meaning, that is done for sake of clarity only so as to not confuse the reader, and it is not intended that such claim term by limited, by implication or otherwise, to that single meaning. Unless a claim element is defined by reciting the word "means" and a function without the recital of any structure, it is not intended that the scope of any claim element be interpreted based on the application of 35 U.S.C. § 112, sixth paragraph.

FIG. **1** illustrates a vehicle **100** including a network **102** to which various vehicle devices **104–110** are coupled. The devices may be sensors, actuators, processors and the like used in connection with various vehicle functional systems and sub-systems, such as, but not limited to, control-by-wire applications for throttle, braking, steering and suspension control, power accessories, communications, entertainment, and the like. The vehicle devices **104–110** may be coupled by interfaces **112–118**, which may be any suitable interface for coupling the particular device to the network **102**, and may be wire, optical, wireless or combinations thereof. It should be understood, however, that the interfaces are not required elements and that the devices **104–110** may be

directly coupled to the network or may form portions of the network. The vehicle devices **104–110** may be adapted to provide one or more functions associated with the vehicle **100**. These devices may be data producing, such as a sensor, data consuming, such as an actuator, processing or other devices, which both produce and consume data, or routing that transport data within the network. Of course, an actuator, typically a data-consuming device, may also produce data, for example where the actuator produces data indicating it has achieved the instructed state, or a sensor may consume data, for example, where it is provided instructions for the manner of function. Data produced by or provided to a device, and carried by the network **102**, is independent of the function of the device itself. That is, the interfaces **112–118** may provide device independent data exchange between the coupled device and the network **102**.

The network **102** includes a switch fabric **130** defining a plurality of communication paths **132** between the devices. The communication paths permit multiple simultaneous peer-to-peer or point-to-point, one-to-many, many-to-many, etc. data packet communication between the devices **104–110**. During operation of the vehicle **100**, data exchanged, for example, between devices **104** and **110** may utilize any available path or paths between the devices. In operation, a single path through the switch fabric **130** may carry all of the data packets representing a communication between the device **104** and the device **110**, or several communication paths may carry portions of the data packets. Subsequent communications may use the same paths or other paths as dictated by the then state of the network **102**. This flexibility provides reliability and speed advantages over bus architectures that are restricted to single communication paths between devices, and hence are subject to failure with failure of the single path or delays based upon congestion of the path. Moreover, communications between other of the devices **104–110** may occur simultaneously using the communication paths within the switch fabric **130**.

The network **102** is a packet data network which may comply with a transmission control protocol/Internet (TCP/IP), asynchronous transfer mode (ATM), Infiniband, RapidIO, or any other packet data protocol now known or later developed. It may also include bus structures that are operated in a packet transit mode, as will be described herein later. As such, the network **102** may use data packets, having fixed or variable length, defined by one or more applicable protocols. For example, if the network **102** uses asynchronous transfer mode (ATM) communication protocol, an ATM standard data cell may be used.

The devices **104–110** need not be discrete devices. Instead, the devices may be systems or subsystems of the vehicle and may include one or more legacy communication media, i.e., legacy bus architectures such as J1850, CAN, LIN, Flexray, MOST or similar bus structures. In such embodiments, the respective interface **112–118** may be configured as a proxy or gateway to permit communication between the active network **102** and the legacy device **104–110**.

FIG. **2** illustrates a network **200** that includes a plurality of network elements **202–212** communicatively coupled by communication links **214–230**. A plurality of devices **238–250** are coupled at various locations, i.e., to several of the network elements **202–212** of the network **200** by corresponding communication links (not separately identified). The devices may be any vehicle device such as flashers **238–244**, flasher control (stalk switch) **246**, gas pedal **248**, one or more gauges such as gauge **250** and the like.

The communication links **214–230** may be robust transport media and may be adapted from serial communication architecture as will be described. That is, the communication links **214–230** may be capable of providing guaranteed, reliable message transfer between the network elements. Any given communication link **214–230** may be a single bi-directional link, a single uni-directional link or combinations of bi-directional and uni-directional links or any combination of link technologies. The links may be defined according to an existing, robust transport mechanism designed for the automotive environment such as CAN, LIN, FLEXRAY, J1850, and the like or may be defined according to transport protocols in development or that are later developed. The links may also be combinations of technologies, or specified in accordance with virtually any other protocol.

The network **200** may incorporate at some level a system management function providing supervision, control, diagnostics and other related functionality. This functionality may be provide by way of a separate entity coupled to the network **200**, or the functionality may be distributed within the network elements **202–212** or other suitable elements of the network **200**.

FIG. **3** illustrates the flexibility provided by the network **200**. As an example of this flexibility, consider the task of communicating a signal from the flasher control **246** to the flasher **240**. The network **200** is a packet based network, and permits any available communication path from a source point to a destination point to be used regardless of the communication media. As shown in FIG. **3**, the signal from the flasher control **246** may traverse a relatively direct path **302** between the flasher control **246** defined by the network elements **206** and **204** and the communication link **222** joining them. Alternatively, a path **304** via the network elements **206**, **202** and **204** and the communication links **218** and **214** joining them may be used. Still a further path **306** via the network elements **206**, **210**, **212** and **204** and the communication links **224**, **228** and **216** may be used. As this example clearly reveals numerous communication paths may be defined. The availability of multiple paths allows the network to manage traffic to avoid congestion on one or more of the communication links **214–232** or at one or more of the network elements **202–212**. The availability of multiple communication paths also permits fault tolerance in the event of failure of one or more network elements and/or communication links by permitting a communication path to be established bypassing the failed elements/links.

Referring now to FIG. **4**, a network **400** includes a plurality of network elements **402–412** communicatively coupled by communication links **414–430**. A plurality of devices **438–450** are coupled at various locations, i.e., to several of the network elements **402–412** of the network **400** by corresponding communication links (not separately identified). Legacy devices **452–458**, i.e., devices adapted to communicate according to existing communication protocols such as J1850, CAN, LIN, Flexray, MOST and the like, are also coupled to the network **400**. For example, devices **452** and **454**, illustrated as door switches, may be coupled to network elements **402** and **404**, respectively, by J1850 communication links **460** and **462**. Devices **456** and **458**, in this example door locks, may be coupled to network elements **410** and **412**, respectively, by CAN communication links **464** and **466**. Moreover, any of the communication links may be specified according to any suitable, preferably robust transport protocol. As illustrated in FIG. **4**, communication l link **414** and **416** may be specified according to CAN protocol, while the remaining links may be specified according to TCP/IP, CAN, LIN, Flexray, and the like.

A structure for the network elements may be as illustrated in FIG. **5**. The network element **500** in FIG. **5** includes operationally coupled one or more input/output ports, one shown as port **502**, a processor **504** and a memory **506**. The memory **506** incorporates a control program (not depicted) to direct the processor to function in a manner that facilitates communication of data packets through the associated network. The input/output port **502** is adapted to be coupled to the communication links to send and receive data packets from the network element **500**. Because the network element **500** may be coupled to more than one transport media type, the processor operates in accordance with the control program to accept data packets sent via a first transport media, to modify the data packets as necessary for communication via a second transport media and to communicate the data packets over the second transport media. In this manner, the network element may act as a proxy or gateway between the disparate communication media. It will be appreciated that alternate network elements may be used with enhanced functionality or simplified functionality as the application requires. For example, should the network element join connection links according to a single protocol, the processing capability for handling disparate protocols may not be required, and such a network element may be adapted to merely route the data packet according to the route information associated with the data packet.

A data packet used for communication within the networks described herein may include a packet type identifier, routing information, source ID information, QoS information and payload. Illustrated in FIG. **6** is an exemplary data packet **600** that may be used in the networks. The data packet **600** may include a start of frame field **602**, an arbitration field **604**, a control field **606**, a data field **608**, a cyclical-redundancy check field **610** and an end of frame field **612**. The arbitration field **604** may be adapted to contain a packet type identifier **614**, a route pointer **616**, port identifiers **618**, **620** and **622**, a source node identifier **624** and a priority tag **626**. The packet type **614** identifies the type of data packet such as bearer, discovery, advertisement, fault, control and the like. The route pointer **616**, if the data packet contains route information, points to the current hop and is decrement with each hop. The route pointer **616** may also contain other types of route information. The port identifiers **618–622** identify the ports, e.g., network elements, the data packet has traversed. The source node **624** identifies the information source. The priority tag **626** may be reserved for QoS requirements and may contain a code identifying a service level for the data packet. The control field **606** may contain control data particular to the transport media, e.g., it may contain CAN control data if the data packet originated from or is destined for a CAN compliant communication device. The data field **608** contains the data carried by the packet, i.e., the payload.

The data packet **600** may be adapted to facilitate source routing, i.e., the route the data packet will take through the network is determined by the information source and this path information is contained within the data packet itself. The data packet **600** may also be adapted to facilitate destination routing, i.e., the route the data packet will take through the network is determined by each intermediate node and the next node information is contained within the data packet.

The data packet **600** may be adapted from known communication packet structures, such as a CAN data packet. As shown in FIG. **6**, the arbitration field **604** is adapted to facilitate communication of data packets within the network **400** according to a number of different serial communication protocols. The arbitration field may also be adapted to contain routing information for communicating the data packet **600** through the network **400**, i.e., information may be contained within the route pointer **616** field or otherwise contained within the arbitration filed **604**. For example, the routing information may be a fixed label which remains with the data packet throughout the network **400**. Each network element of the network **400** then includes a table to direct the data packet through the network **400** according to the label. Alternatively, the packet may be source routed, and the arbitration field may then contain routing information for each hop through the network. A further alternative is that the data packet **600**, and particularly the arbitration information is modified at each hop so that it contains information for the next hop. Of course, other fields of the data packet **600** may be used to carry routing information, QoS information, or other types of information.

The networks **200** and **400** may be implemented into existing applications by adapting the communication links **214–232** from existing robust communication medium. In the implementations shown in FIGS. **2–3**, the communication links **214–232** may be specified according to the CAN protocol. Alternatively, the communication links **214–232** may be specified according to the LIN, Flexray, J1850, MOST or other protocols. In the implementation shown in FIG. **4**, the communication links **414–432** may be specified according to any suitable protocol such as CAN, LIN, Flexray, J1850, MOST and the like. Each of these protocols may define an arbitration mechanism to provide for and permit flow control. Arbitration may be specified to give priority on the communication link to a message with the highest priority. Priority may be indicated within a data packet in a message header, such as the priority tag **626** of the data packet **600**. For example, the message header may contain zeros in the most dominant bits. If two network elements try to transmit on the same communication link at the same time, the message with the highest priority, e.g., the lowest value in the dominant bits, will win and the all others will release the communication link.

On initial startup of a network according to the embodiments described herein, such as networks **200** and **400**, it necessary to identify all nodes of the network. The term "node" may refer to network elements, including but not limited to those network elements described in connection with networks **200** and **400**, switches, routers and any and all coupled devices. It is also necessary to identify message identifiers that are of interest to particular nodes, to assign logical addresses to each node, to create a translation table of identifiers to node logical address, to create a routing table from node to node, and to create one or more back-up routes from node to node. Several levels of service may be associated with this so-called discovery process. For example, and as will be described in more detail, the network may offer nodes capable of multicast, encryption or other capabilities. Nodes may be configured to receive information or to advertise availability of information.

Discovery processes are known in connection with networks, and the commonly used Dijkstra algorithm may be employed to complete a network discovery process and calculate the routing table. These known processes however, assume a totally dynamic network and completes a full discovery process on each power up or upon detection of any failure. Depending on the scale of the network, this discovery process may take several minutes time, which is not practical in an automotive environment where the user expects to be able to enter the vehicle, start it and immediately operate it or where a fault may occur while the vehicle

is operating and any significant delay in the completing the discovery process may present a safety concern. Having to wait several minutes for a discovery process to complete would be viewed as a defect, and would be unacceptable to users and manufacturers.

Networks according to the embodiments described herein generally are not totally dynamic. Generally, the network only becomes dynamic upon detecting a failure, i.e., the network is not dynamic until something goes wrong, or when new hardware is added to the network. Therefore, a last known state of the network may be saved and an incremental discovery process may be employed upon detecting a network change. The incremental discovery process may be completed with little or no effect on overall network performance.

FIGS. **7–12** illustrate one example of an incremental discovery process that may be used with networks such as those described herein. The example shown in FIG. **7–12** is intended to illustrate one possible type of incremental discovery process, and it should be appreciated that alternatives to the specific example described may be used.

Referring then to FIGS. **7–12**, upon power up each node is configured to send a "Hello" message to all of its immediate neighbors on all ports coupled to the node. As illustrated in FIG. **7**, node **01** sends a hello message to each of nodes **02**, **03**, **05** and **07**. The nodes **01**, **02**, **03**, **05** and **07** may be configured in a manner similar to that illustrated in FIG. **5**, wherein the node may include an input/output port, a processor or some minimum form of intelligence to enable sending and receiving hello messages and comparing neighbor tables and a memory, in which its node number, a neighbor table and other routing information may be stored.

The hello message may contain the node number and a copy of the node's local neighbor table. The node will continue to send these local, i.e., 1-hop, hello messages every N seconds, where N is an arbitrarily selected value such that the network is not burdened with hello messages but which is sufficiently frequent to allow early detection of network changes or potential failures. Through these repeated hello messages new connections are discovered and failed or terminated connections are detected by transmission error interrupts generated by the physical layer, e.g., "bus off" error, as is well known.

Whenever a node receives a hello message from a neighbor, it looks at its local neighbor table to see if anything has changed, i.e., to see if there is a new neighbor sending to it a hello message. When the network is initialized, which may occur during initial assembly of the vehicle but may occur at other times, there is no routing information stored. That is, each node's neighbor table is blank, and therefore, the nodes will notice something changing with each hello message received and processed. Upon receipt of a hello message from a node at a port for which information is not stored in the local neighbor table, the receiving node updates its local neighbor table to include this information. As illustrated in FIG. **8**, the node **02** updates its local neighbor table **900** to indicate that node **01** is connected at port **2**. Nodes **02**, **03**, **05** and **07** also send hello messages that are received by node **01** as shown in FIG. **9**. Receipt of these hello messages allows node **01** to generate its own local neighbor table **1000**. Through this process of the nodes sending hello messages, each node is able to generate its local neighbor table.

On a normal start up, with a last-known-good local table stored in the node's memory, the node will be able to start effectively communicating immediately. Any network changes will begin to filter throughout the network as nodes discover new/missing neighbors and start broadcasting new neighbor tables (FIGS. **10** and **11**).

When there is a change in a node's neighbor table, the node then broadcasts its neighbor table for receipt by each other node in the network. Broadcasting of the neighbor tables allows the nodes to generate and store routing tables **1300** as shown in FIG. **12**. Given all of the neighbor tables, generally shown as neighbor tables **1302** in FIG. **12**, each node may then determine all of the node in the network **1304** and the number of hops **1306** required to reach each other nodes and the intermediary nodes **1308**, **1310**, **1312** that make up a path to the particular node.

The discovery process may also include periodic checking to determine a status or health of the network. For example, a node may fail to receive a broadcast message containing a node's new neighbor table according to the process described above. This node may become effectively out of sync with the rest of the network until such time as it receives the broadcast message and is able to update its local neighbor table. For this reason, each node may be configured to periodically broadcast a packet containing a checksum for its neighbor table, from which each node is able to verify consistency. The check sum may be sent with other message traffic so that it does not consume bandwidth within the network.

Synchronization may also become an issue in a fault condition. A fault condition may initiate a flurry of rediscovery activity, and it is possible as a result that a node may receive updates out of sequence, i.e., a less up to date table may arrive after the true latest table. Time stamping may be employed to guarantee each node has the latest information.

Other modifications and alternative embodiments of the invention will be apparent to those skilled in the art in view of the foregoing description. This description is to be construed as illustrative only, and is for the purpose of teaching those skilled in the art the best mode of carrying out the invention. The details of the structure and method may be varied substantially without departing from the spirit of the invention, and the exclusive use of all modifications which come within the scope of the appended claims is reserved.

We claim:

1. A vehicle communication network comprising:

a plurality of network elements;

a plurality of communication links joining the network elements in a point-to-point configuration, at least a portion of the plurality of communication links being specified in accordance with a shared-access bus protocol; and

the plurality of communication links being arranged to communicate data packets between the network elements, wherein the shared-access bus protocol comprises of one of CAN, LIN, J1850, TTP, Flexray and MOST bus protocols.

2. The vehicle communication network of claim **1**, wherein the network elements are operative to control communication of the data packets on the communication links.

3. The vehicle communication network of claim **1**, wherein the shared-access bus protocol comprises at least two different shared-access bus protocols and wherein the communication links are specified in accordance with at least one of the two different shared-access bus protocols.

4. The vehicle communication network of claim **1** further comprising a system manager.

5. The vehicle communication network of claim 1, wherein each of the plurality of communication links is one of a bi-directional and a uni-directional link.

6. The vehicle communication network of claim 1, wherein the communication links and network elements are configured as a switch fabric.

7. The vehicle communication network of claim 1, wherein the communication links and network elements are configurable to provide a plurality of communication paths between a first network element and a second network element via one or more communication links and one or more intermediary network elements.

8. A communication system comprising:

a vehicle having disposed therein a plurality of network elements;

a plurality of communication links joining the network elements in a point-to-point configuration, at least a portion of the plurality of communication links being specified in accordance with a shared-access bus protocol;

at least one of the network elements being coupled to a device, system, sub-system, sensor or actuator of the vehicle; and

the plurality of communication links being arranged to communicate data packets between the network elements, wherein the shared-access bus protocol comprises one of TTP, CAN, LIN, Flexray, J1850 and MOST bus protocols.

9. The communication system of claim 8, wherein the network elements are operative to control communication of the data packets on the communication links.

10. The communication system of claim 8, wherein the shared-access bus protocol comprises at least two different shared-access bus protocols and wherein the communication links are specified in accordance with at least one of the two different shared-access bus protocols.

11. The communication system of claim 8, further comprising a system manager.

12. The communication system of claim 8, wherein the communication links and network elements are configured as a switch fabric.

13. The communication system of claim 8, wherein the communication links and network element are configurable to provide a plurality of communication paths between a first network element and a second network element via one or more communication links and one or more intermediary network elements.

14. A method of providing communications within a vehicle comprising:

providing within the vehicle a plurality of network elements;

communicatively coupling the plurality of network elements using a plurality of communication links, at least a portion of which are shared access communication links comprising one of TTP, CAN, LIN, Flexray, J1850 and MOST bus protocols;

configuring a data packet for communication between the network elements, and

communicating the data packet between the network elements using the communication links.

15. The method of claim 14, further comprising coupling at least one of the network elements to one of a device, system, sub-system, sensor or actuator of the vehicle.

16. The method of claim 14, wherein the step of communicating the data packet between the network elements comprising communicating the data packet on one of a plurality of communication paths comprising communication links and network elements between a first network element and a second network element.

17. A vehicle communication network comprising:

a plurality of network elements;

a plurality of communication links joining the network elements in a point-to-point configuration, the plurality of communication links being arranged to communicate data packets between the network elements;

wherein a first network element and a second network element are coupled with a communication link using a first network protocol, the second network element coupled to another network element different from the first network element with a communication link using a second network protocol, and the first network element coupled to another network element different from the second network element with a communication link using a third network protocol.

18. The vehicle communication network of claim 17, wherein the second and third network protocol is selected from the set of protocols consisting of CAN, LIN, J1850, TTP, Flexray and MOST bus protocols.

19. The vehicle communication network of claim 17, wherein the another network element coupled to the first element and the another network element coupled to the second network element are the same network element.

20. The vehicle communication network of claim 19, wherein at least one of the first, second, and third network protocols are specified in accordance with a shared-access bus protocol.

21. The vehicle communication network of claim 19, wherein at least one of the first, second, and third network protocols is not a shared-access bus protocol.

22. The vehicle communication network of claim 19, wherein at least one of the protocols comprises one of CAN, LIN, J1850, TTP, Flexray and MOST bus protocols.

23. The vehicle communication network of claim 17, wherein at least a portion of the network is an asynchronous network.

24. The vehicle communication network of claim 17, wherein the data packets are communicated discretely while in transit.

25. The method of claim 14, wherein communicating the data packet comprises communicating the packet between the network elements asynchronously.

26. The method of claim 14, wherein communicating the data packet comprises communicating the data packet discretely while in transit.

* * * * *