UNITED STATES PATENT AND TRADEMARK OFFICE

BEFORE THE PATENT TRIAL AND APPEAL BOARD

DAIMLER NORTH AMERICA CORPORATION, MERCEDES-BENZ USA, LLC, AND MERCEDES-BENZ U.S. INTERNATIONAL, INC.,
Petitioners

v.

Stragent, LLC,
Patent Owner

Case IPR2017-01502
U.S. Patent 8,209,705

STRAGENT, LLC'S PATENT OWNER RESPONSE

TABLE OF CONTENTS

I. INTRODUCTION 1

II. THE '705 PATENT 3

A. Technology Background 3

B. The Prosecution History.....5

III. SUMMARY OF THE PETITIONER'S PROPOSED GROUNDS FOR REVIEW 6

IV. THE SCOPE AND CONTENT OF THE PRIOR ART 6

A. Posadas (Exh. 1006).....6

B. Stewart (Exh. 1007). 10

C. Wense (Exh. 1008).....11

D. Miesterfeld (Exh. 1009). 11

V. CLAIM CONSTRUCTION 14

A. The Governing Claim Construction Standard. 14

B. Construction of Specific Terms 16

1. limitation 7g: 16

2. limitations 7l, m, n: 18

VI. THE PERSON OF ORDINARY SKILL IN THE ART 19

VII. LEGAL STANDARDS 19

A. OBVIOUSNESS 19

B. ENABLEMENT.....22

VIII. GROUND 1: PETITIONER FAILS TO SHOW THAT CLAIMS 8-19 ARE OBVIOUS OVER POSADAS, STEWART, AND WENSE. 25

A. Claim 7 25

B. Claim 8 37

C. Claim 10 38

D. Claim 11 40

E. Claim 18 41

IX. GROUND 2: PETITIONER FAILS TO SHOW THAT CLAIMS 8-19 ARE OBVIOUS OVER MIESTERFELD, STEWART, AND WENSE. 44

A. Claim 7 45

B. Claim 8 54

C. Claim 10 56

D. Claim 11 57

E. Claim 18 58

X. CONDITIONAL CLAIM ELEMENTS SHOULD BE GIVEN PATENTABLE WEIGHT 59

XI. THE IPR PROCESS IS UNCONSTITUTIONAL 62

XII. CONCLUSION 63

TABLE OF AUTHORITIES

Cases

Beckman Instrumentsv.LKB Produkter AB, 892 F.2d 1547 (Fed. Cir. 1989) 23

Cuozzo Speed Techs., LLC v. Lee, __ U.S. __, 136 S. Ct. 2131 (2016) 15

Elan Pharm., Inc. v. Mayo Found. For Med. Educ. & Research, 346 F.3d 1051 (Fed. Cir. 2003) 24

Ex parte Schulhauser, Appeal 2013-007847, slip op. 6–10 (PTAB April 28, 2016) 59, 61

Graham v. John Deere Co., 383 U.S. 1, 148 USPQ 459 (1966) 20

Impax Labs., Inc. v. Aventis Pharm., Inc., 545 F.3d 1312 (Fed.Cir.2008).....22

In re Antor Media Corp., 689 F.3d 1282 (Fed.Cir.2012) 23

In re Hodges, 882 F.3d 1107 (Fed. Cir. 2018) 15

In re Kahn, 441 F.3d 977 (Fed. Cir. 2006) 22

In re Morsa, 803 F.3d 1374 (Fed. Cir. 2015) 22

In re Smith Int'l, Inc., 871 F.3d 1375 (Fed. Cir. 2017) 15

*Insite Vision Inc. v. Sandoz, In*c., 783 F.3d 853 (Fed. Cir. 2015)..... 21, 22

Microsoft Corp. v. Proxyconn, Inc., 789 F.3d 1292 (Fed. Cir. 2015) 14, 16

Mintz v. Dietz & Watson, Inc., 679 F.3d 1372 (Fed. Cir. 2012).....22

Monarch Knitting Mach. Corp. v. Sulzer Morat GmbH, 139 F.3d 877 (Fed. Cir. 1998) 22

Monsanto Tech. LLC v. E.I. DuPont de Nemours & Co., 878 F.3d 1336 (Fed. Cir. 2018) 14

Mylan Institutional LLC v. Aurobindo Pharma Ltd., 857 F.3d 858 (Fed. Cir. 2017) 23

Oil States Energy Svcs., LLC v. Greene's Energy Group, LLC, No. 2015-1855 (Fed. Cir. 2015).....62

OSRAM Sylvania, Inc. v. Am Induction Techs., Inc., 701 F.3d 698 (Fed. Cir. 2012).....2, 20

Petition granted, *Oil States Energy Svcs., LLC v. Greene's Energy Group, LLC*, No. 16-712 (U.S. June 12, 2017) 63

Pfizer, Inc. v. Apotex, Inc., 480 F.3d 1348 (Fed. Cir. 2007).....21

*Procter & Gamble Co. v. Teva Pharm. USA, In*c., 566 F.3d 989 (Fed. Cir. 2009).21

Schering Corp. v. Geneva Pharm., 339 F.3d 1373 (Fed.Cir.2003).....23

Symbol Techs. Inc. v. Opticon Inc., 935 F.2d 1569 (Fed. Cir. 1991) 23

Trivascular, Inc. v. Samuels, 812 F.3d 1056 (Fed. Cir. 2016) 15

Other Authorities

Epistar, et al. v. Trustees Of Boston University, IPR2013-00298, Paper No. 18 (P.T.A.B. November 15, 2103).....2

Ex parte Hehenberger, Appeal No. 2015-007421 (Jan. 31, 2016).....61

Office Patent Trial Practice Guide,

77 Fed. Reg. 48,756 (Aug. 14, 2012) 14

Rules

37 C.F.R. § 100(b) 14

37 C.F.R. § 42.100(b) 14

Regulations

MPEP §2121.01 24

TABLE OF EXHIBITS

Exhibit	Title
2001	Curriculum Vitae of Jeffrey A. Miller, Ph.D.
2002	Standard J2355_199710
2003	Merriam-Webster Dictionary, 10th Edition (2002)
2004	Microsoft Computer Dictionary, 3d Edition (1997)
2005	Declaration of Thomas H. Kramer, Esq.
2006	Declaration of Jeffrey A. Miller, Ph.D.

I. INTRODUCTION

The Board should not cancel any of the challenged claims of this *inter partes* review of U.S. Patent No. 8,566,843 ("the '843 patent") because Petitioner did not establish by a preponderance of the evidence any of the challenged claims are unpatentable for at least two separate and independent groups of reasons.

Petitioner has simply failed to present a *prima facie* case of unpatentability, because petitioner has not demonstrated, and cannot demonstrate, key critical limitations in the prior art. Petitioner has attempted to piece together individual elements from the existing art. But, Petitioner has completely overlooked or ignored critical plain claim requirements. For example, the plain language of each and every claim requires, *inter alia*, that information be received from one network, then be stored utilizing a storage resource, and then <u>that</u> information be shared with a second network. This requirement is manifest, because all the limitations of all the claims refer to "the information," and that is the information received and stored, and which has to be shared. Yet, Petitioner never even addresses that language, much less attempts to demonstrate that it is found in the prior art.

Similarly, as detailed in the Declaration of Dr. Jeffrey Miller (Exh. 2006), Petitioner continually attempts to rewrite the prior art. For example, Petitioner rewrites and expands technical terms in the prior art so that the disclosure means

something other than what was written – all based on 20/20 hindsight and attempt to rewrite the prior art to encompass the patented invention.

Second, Petitioner's obviousness arguments are predicated on the false legal view that any ability to piece isolated items from the prior art is enough to demonstrate obviousness. Petitioner fails to prove that a skilled artisan would have been motivated or had any reason to make the various combinations proffered in the Petition, because the various technologies of the prior art are different and incompatible. *OSRAM Sylvania, Inc. v. Am Induction Techs., Inc*., 701 F.3d 698, 706 (Fed. Cir. 2012). The Board has consistently declined to cancel claims in IPR proceedings when the Petition fails to identify any objective evidence such as experimental data, tending to establish that two different structures can be combined. *Epistar, et al. v. Trustees Of Boston University,* IPR2013-00298, Decision Not To Institute, Paper No. 18 (P.T.A.B. November 15, 2103). Here, the Petitioner did not set forth any such objective evidence.

Moreover, as noted, there even if all the combinations were made, there are still plain claim limitations that are not found in that combination. That failure stands as a sufficient basis for rejecting the petition, without need to consider enablement. But, none of the prior art cited by Petitioner, and considering the full state of the art, enables the necessary conversion of data or information from one protocol to another different protocol so as to permit sharing of the information.

For the reasons mentioned above, and as explained more fully below, the Petitioner failed to demonstrate by a preponderance of the evidence that any of the challenged claims are unpatentable.

II. THE '705 PATENT

A. Technology Background

The '705 patent is generally directed towards sharing information in real-time between different networks which operate based on different protocols in distributed systems. See generally the Abstract. The Patent discloses:

> A system, method and computer program product are provided for sharing information in a distributed system. After information is received, it is stored on a bulletin board. In use, the information is shared, in real-time, among a plurality of heterogeneous processes.

'705 Patent at 1:29-33.

where

> The system architecture may be situated in automotive electronics or industrial control and monitoring systems. In an automotive environment, the various Electronic Control Units (ECUs, 102) control complex applications such as engine control, brake control, or diagnostics. They are either connected to sensors and actuators via discrete links or simple standard functions such as sensors and actuators are organized into separate sub networks.

'705 Patent at 3:11-18

The disclosed system includes two or more networks, each of which is a Controller Area Network (CAN), a FlexRay Network, or a Local Interconnect

Network (LIN). '705 Patent at 3:24-33; 12: 39-62. Data between each network is shared using a "bulletin board" in a storage resource. The claimed inventions are illustrated in annotated Figure 7, below, and the associated descriptions. As shown in Figure 7, multiple different networks based on different protocols communicate through network controllers (shown in yellow), associated Operating System interfaces (shown in green), and associated remote message communication processes (shown in blue) in order to share information in bulletin board (shown in red):

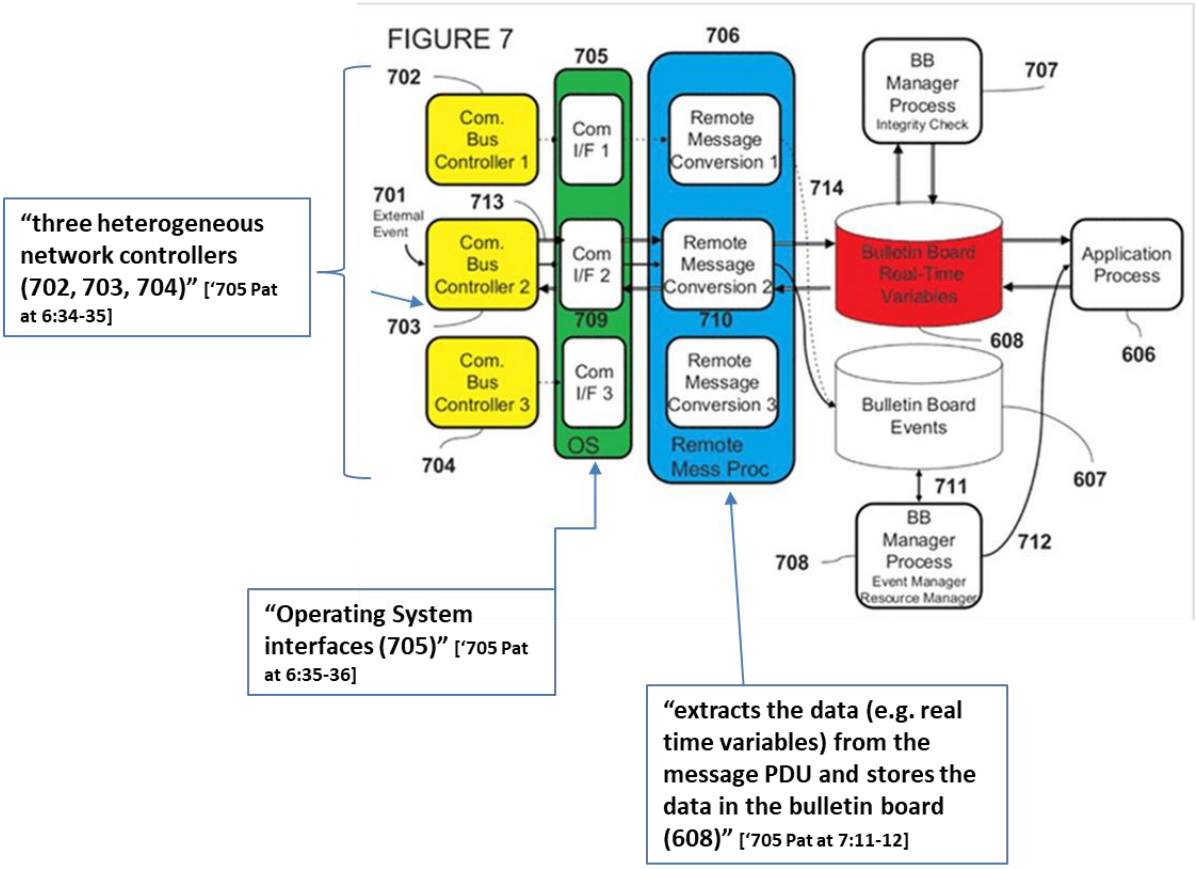

Each of the multiple networks communicates with the bulletin board through its own interface. The interface includes at least two parts or components. The first part or component receives data from the associated network, and can include an operating system interface. *See* '705 Patent at 12:39-62; *see also* green portion in annotated Figure 7. The second part or component processes that data, and can include the remote message conversion. *See* '705 Patent at 12:39-62; *see also* blue portion in annotated Figure 7 ("The associated remote message conversion method 2 (710) extracts the data (e.g. real time variables) from the message PDU and stores the data in the bulletin board (608)"). This arrangement allows the '705 patent to provide real-time sharing of information across a plurality of networks.

B. The Prosecution History

The '705 Patent is a continuation of U.S. Patent No. 7,802,263 ("the '263 Patent"), and includes claims that are similar to those of the '263 Patent. Petitioner notes, but attempts to downplay, the fact that the Miesterfeld reference was considered by the Examiner by the timing of its disclosure. Pet. at 4-5. Petitioner errs.

First, as detailed below, Miesterfeld fails t disclose many claim limitations. Further, there is <u>no</u> evidence that the "examiner's consideration of applicants' IDS, was not *substantively* considered" (emphasis added). In fact, any argument to the contrary is contradicted by the fact that the same reference **was**

considered by the same Examiner time and time again during prosecution of subsequently-filed continuations which ultimately were granted and are similarly asserted against the Petitioner.

III. SUMMARY OF THE PETITIONER'S PROPOSED GROUNDS FOR REVIEW

The instituted grounds of review are as follows:

Ground 1: Claims 8–19 are unpatentable as obvious over Posadas, Stewart, and Wense

Ground 2: Claims 8–19 are unpatentable as obvious over Miesterfeld, Stewart, and Wense.

IV. THE SCOPE AND CONTENT OF THE PRIOR ART

The references are summarized below.

A. Posadas (Exh. 1006).

For Ground 1, the primary reference is Posadas *et al.*, "Communication Structure for Sensor Fusion in Distributed Real Time Systems," published in the Proceedings volume from the 6th IFAC Algorithms and Architectures for Real-Time Control Conference, held in Palma de Mallorca, Spain. Exh. 1006. Posadas describes a communication system for use in the YAIR (Yet Another Intelligent Robot).

Posadas is entirely unrelated to the subject matter of the Patent, and involves an entirely different architecture. Most importantly, Posadas does not disclose

receiving information from a first network, storing that received information utilizing a storage resource, and then sharing that same received and stored utilizing a second protocol that is different from the protocol associated with the information as it was received and stored.

Posadas discloses the concept that Posadas depicts as follows (with annotations supplied):

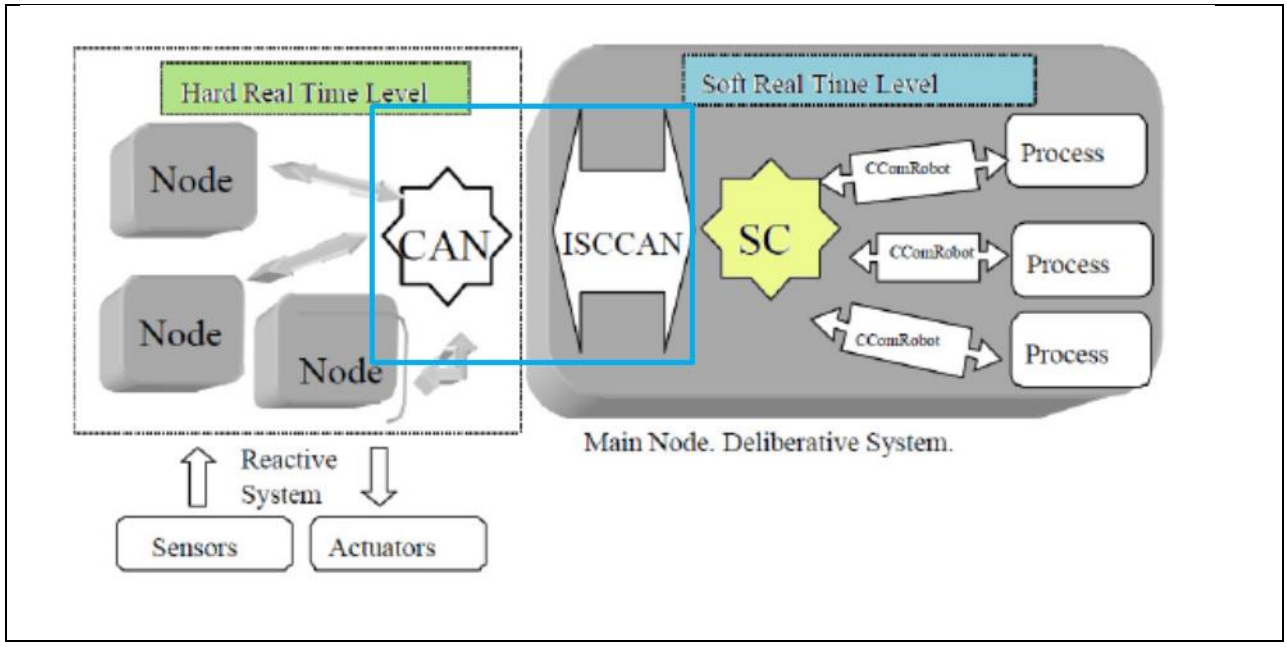

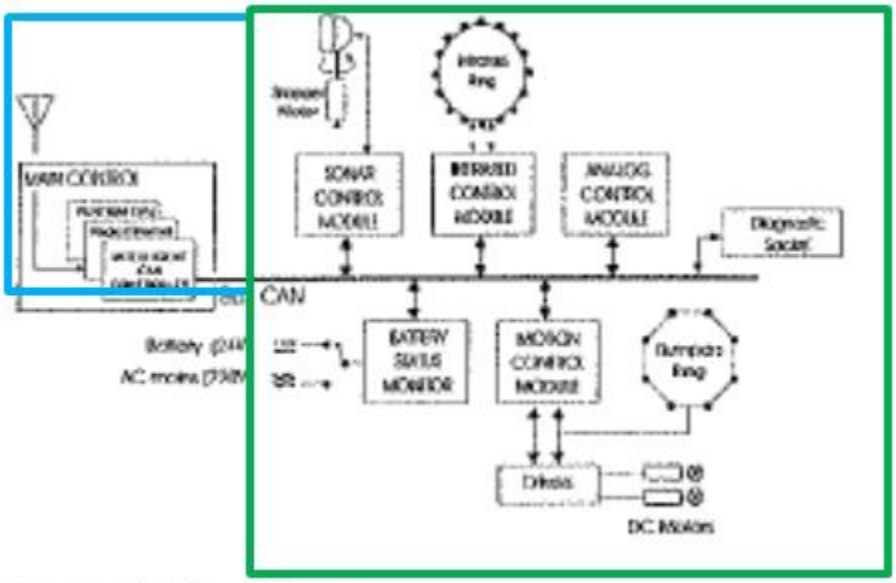

Fig. 2: YAIR architecture

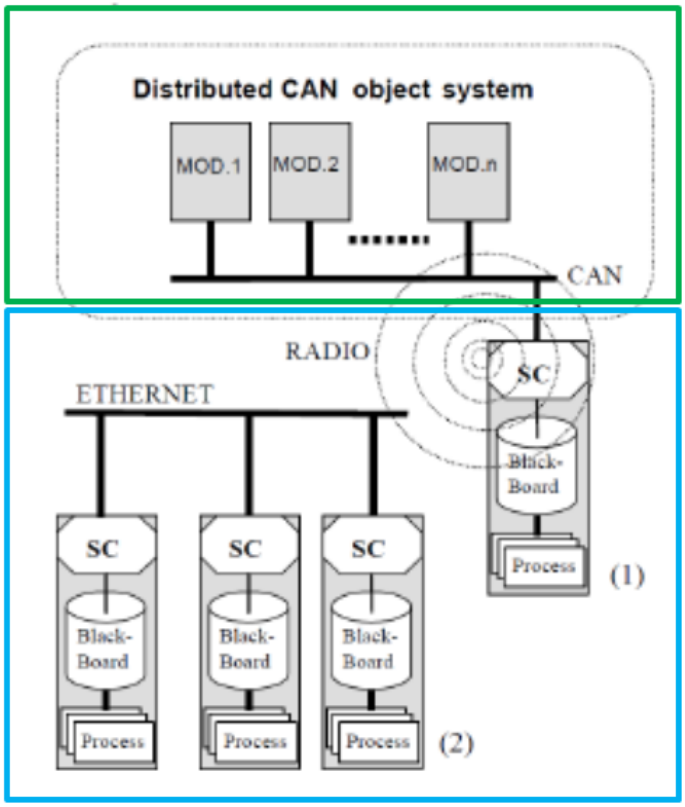

Fig. 4: Distributed blackboard structure.

As pertinent here, Posadas discloses only a system where there is a storage/processor location that includes a distributed blackboard, which Posadas identifies as the "SC" (blue border), and that storage/processor "SC" area is connected via ISCCAN to a single CAN network (green border).

What is shown as the "Radio" or "Ethernet" in Posadas' Figures is part of the distributed blackboard or storage resource – i.e., that is what distributes, stores and then processes the information provided by the CAN network in the storage silo.

Posadas does not disclose how the YAIR actually communicates. Posadas refers to the "ISCCAN" software, the "SC," "supplied object toolbox" and "SC general bind notification scheme." (p. 154). But, Posadas never discloses what either ISCANN or SC, or these toolboxes or schemes actually do or how they do it.

Posadas does not disclose any conversion of data from one protocol to another. Posadas states that "The ISCCAN gateway solves the data format conversion and serialisation using ASCII-Hex representation of CAN binary streams." But, going from binary to ASCII is not a true "conversion," but merely just a different representation though. Instead of representing 'A' as a character, it's being represented as a binary string – 0100 0001. That is not "conversion," but just a different way of representing the same data.

B. Stewart (Exh. 1007).

Stewart is a secondary reference in both Grounds 1 and 2. The Stewart reference is "Integration of Real-Time Software Modules for Reconfigurable Sensor-Based Control Systems," published in the Proceedings of the 1992 IEEE/RSJ International Conference on Intelligent Robots and Systems in Raleigh, North Carolina in July 1992. (hereinafter, "Stewart"). Exh. 1008. Stewart describes a system with a global state variable table (database) that can share data across multiple processes confined to a single bus in real-time. Each process maintains its own local state variable table so there is no contention of data among the processes. "At the beginning of every cycle of a task, the variables which are input ports are transferred into the local table from the global table. At the end of the task's cycle, variables which are output ports are copied from the local table into the global table." (at p. 7). To keep the data in sync with the global database, Stewart recommends a spin-lock. The spin-lock tests to see if any other process has currently acquired the lock on the database, and if so, the process must wait for a small delay (called the polling time) before trying again.

Stewart directs that if a process is unable to access the database after a certain number of retries, "error handlers should be installed to detect tasks that suffer successive time-out errors," but then states that "[d]iscussion on handling these errors is beyond the scope of this paper." (IV.A., at p. 11). Thus, whereas

Stewart acknowledges that his proposed system includes situations where a process will not be able to write to the global database, Stewart does not disclose how to handle such situations, and, in fact, disclaims any discussion on handling these circumstances.

C. Wense (Exh. 1008).

Wense is also a secondary reference in both Grounds 1 and 2. The reference is H-C. von der Wense et al., "Building Automotive LIN Applications," *Advanced Microsystems for Automotive Applications*, published on July 16, 2001. (hereinafter "Wense"). Exh. 1008. Wense describes the Local Interconnect Network (LIN) communication standard, and, particularly, the properties of LIN in comparison with other networking standards, LIN's position in the relative hierarchy of networking applications, and its potential operation as a subnetwork of a CAN network system.

D. Miesterfeld (Exh. 1009).

Ground 2 relies on U.S. Patent No. 6,141,710 to Miesterfeld ("Miesterfeld"). Exh. 1009. Miesterfeld describes a system for interfacing what Miesterfeld refers to as a "Vehicle Data Bus (VDB)" to an Intelligent Transportation System Data Bus (ITS).

Petitioner depicts the reference in the following annotated figure:

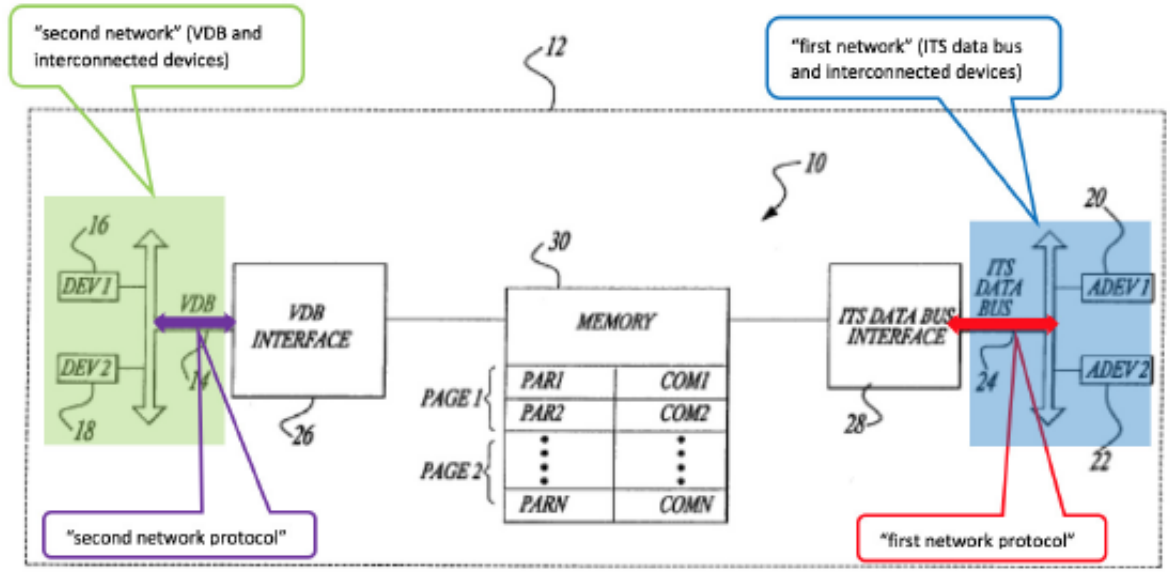

Fig-1

The term "VDB" is identified simply as something found in a "typical vehicle," and which "provides a mechanism for data exchange between one or plurality of devices 16, 18, one or both of which write data to or read data from VDB 14." (3:1-5). The term "ITS" is identified as something that can be "D^2B, USB, IDB, Firewall, and the like…." (9:55-56).

The reference never states that VDB and ITS utilize different protocols. It is not clear how the protocols could be different, because Miesterfeld never discloses how his system can convert data from one protocol to a different protocol.

Petitioner asserts that Miesterfeld's reference to "IDB" inherently refers to interaction via CAN. That is incorrect. Miesterfeld refers solely to "IDB." When

Miesterfeld wrote "IDB," it could mean only one technology, and that was the technology that was "IDB" at the time that Miesterfeld developed, tested and authored his patent. In other words, when Miesterfeld wrote his paper, IDB defined one and only one technology. Thus, a skilled artisan would understand that "IDB" refers to the technology defined as Standard J2355_199710, which was published October 1, 1997, and was the only IDB standard when Miesterfeld was published.

Contrary to Petitioner's assertion, a skilled artisan would not understand that Miesterfeld was referring to "IDB-C," which is a very different specification than "IDB," and which was not even published until November 27, 2001 – long after Miesterfeld was published. There is nothing inherent in the words "IDB" published in Miesterfeld that would cause a skilled artisan to say that Miesterfeld was not actually talking about Standard J2355_199710 – which he was – but was talking about an entirely different technology. Miesterfeld never refers to CAN directly or indirectly. A skilled artisan would not conflate "IDB" and "IDB-C" simply because both technologies have the letters "IDB" in their titles. For example, there are a multitude of standards that have the letters "IEEE" or "ITU" in their titles, followed by dashes and numbers or letter. No skilled artisan would assume that all such "IEEE" and "ITU" standards are interchangeable, much less mean the same thing. A skilled artisan would not view DOS and Windows 10 as

interchangeable merely because they can both be called a Microsoft OS. A skilled artisan would accept that the author disclosed certain busses/protocols, and that the scientist meant what he said, and not something different. Miesterfeld does not disclose to a skilled artisan at the time of the invention of the Patent a system which includes a CAN bus. *See* Exh. 2006, ¶¶ 49-50.

V. CLAIM CONSTRUCTION

A. The Governing Claim Construction Standard.

The broadest reasonable construction ("BRC") standard applies in an *inter partes* review of an unexpired patent. 37 C.F.R. § 100(b); *Office Patent Trial Practice Guide*, 77 Fed. Reg. 48,756, 48,766 (Aug. 14, 2012).[1]

"A patent's specification, together with its prosecution history, constitutes intrinsic evidence to which the PTAB gives priority when it construes claims." *Monsanto Tech. LLC v. E.I. DuPont de Nemours & Co*., 878 F.3d 1336, 1341 (Fed. Cir. 2018) (citing *Microsoft Corp. v. Proxyconn, Inc*., 789 F.3d 1292, 1297–98 (Fed. Cir. 2015)). "A specification includes both the written description and the claims of the patent." *Id.*

[1] Various decisions have referred to "broadest reasonable construction" and "broadest reasonable interpretation." The governing Rule for IPR proceedings states that "A claim … shall be given its broadest reasonable *construction* in light of the specification of the patent in which it appears." 37 C.F.R. § 42.100(b) (emphasis supplied).

BRC requires "construction in light of the specification of the patent in which it appears." *Cuozzo Speed Techs., LLC v. Lee*, __ U.S. __, 136 S. Ct. 2131, 2142 (2016) (quoting 37 CFR § 42.100(b)).

Further, the BRC standard requires that "words of the claim must be given their plain meaning, unless such meaning is inconsistent with the specification and prosecution history." *Trivascular, Inc. v. Samuels*, 812 F.3d 1056, 1062 (Fed. Cir. 2016).

The entire claim must be considered when interpreting terms, because "[c]onstruing individual words of a claim without considering the context in which those words appear is simply not 'reasonable'." *Trivascular, supra*, 812 F.3d at 1062. Thus, any construction or interpretation must be reasonable in view of the full claim language and the written description. *In re Hodges*, 882 F.3d 1107, 1115 (Fed. Cir. 2018) ("The Board's strained interpretation of "signal" is therefore unreasonably broad and inconsistent with the … application. As such, it does not accord with the broadest reasonable interpretation standard") (citing *In re Smith Int'l, Inc.*, 871 F.3d 1375, 1382–83 (Fed. Cir. 2017) (stating that "the Board cannot construe the claims so broadly that its constructions are unreasonable under general claim construction principles," and that giving claim terms "a strained breadth in the face of the otherwise different description in the specification [is] unreasonable").

In short, proper construction "'cannot be divorced from the specification and the record evidence,' and 'must be consistent with the one that those skilled in the art would reach.'" *Microsoft Corp. v. Proxyconn, Inc*., 789 F.3d 1292, 1298 (Fed. Cir. 2015).

B. Construction of Specific Terms

1. limitation 7g:

> "*the information* to be shared by: in real-time, sharing *the information* utilizing at least one message format corresponding to a second network protocol associated with a second network which is different from the first network protocol."

In this limitation, the words "*the* information" clearly refer to information previously identified in the claims – i.e., the "information associated with a message, utilizing a first network protocol associated with a first network" (limitation 7b) which was caused to be stored utilizing the storage resource (limitation 7e) – i.e., it is information whose storage was completed to the bulletin board or the storage area.

Second, the terms "shared" and "sharing" should generally be given its ordinary meaning. The typical dictionary meaning of "sharing" is "to partake of, use, experience, occupy, or enjoy with others; to have in common." *See* Exh. 2003, Merriam-Webster Dictionary, 10th Edition (2002). *See also* Exh. 2004, Microsoft Computer Dictionary, 3d Edition (1997).

Third, the term "protocol" in this case, as generally in computer science, means a set of rules or procedures utilizing preexisting agreement as to how information will be structured and how each side will send and receive it for transmitting information between electronic devices. The Patent identifies UDP/IP, TCP/IP, RTP, HTTP, SOAP and JAVA as examples of "standard protocols."

Fourth, the Patent defines "real-time" as "any response time that may be measured in milli- or microseconds, and/or is less than 1 second."

Thus, this entire claim limitation should be construed as having "information associated with a message, utilizing a first network protocol associated with a first network" which was stored utilizing the storage resource be partaken of, used, experienced or occupied (that is "shared") by a second network utilizing at least one message format corresponding to a second network protocol (i.e., a set of rules or procedures utilizing preexisting agreement as to how information will be structured and how each side will send and receive it for transmitting information between electronic devices) associated with a second network which is different from the first network protocol, in a time span that may be measured in milli- or microseconds, and/or is less than 1 second."

2. limitations 7l, m, n:

> a second interface portion for interfacing with <u>the second network</u>, the second interface portion including a second interface-related first layer part for receiving second interface-related first layer messages and a second interface-related second layer part, the second interface-related first layer messages being processed after which second interface-related second layer messages are provided, <u>where the second network is different from the first network</u> and is at least one of the Controller Area Network, the Flexray network, or the Local Interconnect Network."

In general, the language is plain and the ordinary meaning applies. However, it is important to consider the words "the second network." That term clearly refers to the second network described in the antecedent limitations, which is the network referenced in limitation 7g as the second network utilizing a second different protocol which is the recipient of the "shared" information connected to the storage resource. In addition the second network by plain language of the claim must be different from the first network.

The above constructions are supported by the specification. See, for example, '705 Patent 1:30-33; 3:51-59; 6:27-31; 6:27-31; 10:67-11:9; 11:20-58.

"diagnostic mode."

The proper construction of this term is "an alternate mode of operation, distinct from normal operations, that still allows inspection of the system while it is running." This construction is supported by the specification, which describes the use of multiple modes of operation. See Ex.1001, 11:51-67. Thus, the

specification explicitly states that diagnostic mode is a distinct mode from the "normal operating mode," and "allows inspection of the system, while it is running." Thus, the broad reasonable interpretation of "diagnostic mode" is "an alternate mode of operation, distinct from normal operations, that still allows inspection of the system while it is running."

VI. THE PERSON OF ORDINARY SKILL IN THE ART

Considering the types of problems encountered in the art, the prior art solutions to those problems and the high sophistication of the technology, a person having ordinary skill in the relevant art at the time of the invention, which is conservatively assumed to be December 2003, would have had at least the qualifications of or equivalent to either a master's degree in electrical engineering, computer science, or computer engineering with course work or research in embedded networking technologies or an undergraduate degree in electrical engineering, computer science, or computer engineering with at least two years of relevant work experience in industry.

VII. LEGAL STANDARDS

A. OBVIOUSNESS

As set forth by the Supreme Court, the question of non-obviousness is resolved on the basis of underlying factual determinations including (1) the scope and content of the prior art, (2) any differences between the claimed subject matter

and the prior art, and (3) the level of skill in the art. *Graham v. John Deere Co.*, 383 U.S. 1, 17-18 (1966); *see also KSR Int'l Co. v. Teleflex Inc.*, 550 U.S. 398, 399 (2007).

A petitioner seeking to invalidate a patent as obvious must demonstrate that a "skilled artisan would have been motivated to combine the teachings of the prior art references to achieve the claimed invention, and that the skilled artisan would have had a reasonable expectation of success in doing so." *OSRAM Sylvania, Inc. v. Am. Induction Techs., Inc.*, 701 F.3d 698, 706 (Fed. Cir. 2012).

The Supreme Court has stated, "a patent . . . is not proved obvious merely by demonstrating that each of its elements was, independently, known in the prior art." *See KSR Int'l Co. v. Teleflex Inc.*, 550 U.S. 398, 418 (2007). Rather, it is "important to identify a reason that would have prompted a person of ordinary skill in the relevant field to combine the elements in the way the claimed new invention does." *Id*. Elaborating on this premise, the Federal Circuit requires a patent challenger to demonstrate that a skilled artisan would have had a reason to combine the teachings of the prior art references to achieve the claimed invention, and that the skilled artisan would have had a reasonable expectation of success from doing so. *See PAR Pharm., Inc. v. TWI Pharms., Inc.*, 773 F.3d 1186, 1193 (Fed. Cir. 2014). It is not enough to show that the references ***could*** be combined, there must be evidence to show that an artisan ***would*** have been motivated to make

the combinations. *See Personal Web Techs., LLC v. Apple, Inc.*, 848 F.3d 987, 994 (Fed. Cir. 2017), *citing Belden Inc. v. Berk-Tek LLC*, 805 F.3d 1064, 1073 (Fed. Cir. 2015) ("[O]bviousness concerns whether a skilled artisan not only could have made but would have been motivated to make the combinations or modifications of prior art to arrive at the claimed invention."). Courts have found the requisite motivation lacking when the proposed combination performs inefficiently or ineffectively. *See Intelligent Bio-Systems, Inc. v. Illumina Cambridge Ltd.*, 821 F.3d 1359, 1368-69 (Fed. Cir. 2016). In demonstrating a motivation to combine, conclusory statements alone are insufficient and must be supported by a reasoned explanation. *See In re Nuvasive*, 842 F.3d 1376, 1383-85 (Fed. Cir. 2016) (vacating PTAB decision on obviousness for failing to articulate motivation to combine beyond conclusory statements that did not explain the specific benefits).

Otherwise stated, "The obviousness inquiry entails consideration of whether a person of ordinary skill in the art 'would have been motivated to combine the teachings of the prior art references to achieve the claimed invention, and ... would have had a reasonable expectation of success in doing so.'" *Insite Vision Inc. v. Sandoz, In*c., 783 F.3d 853, 859 (Fed. Cir. 2015) (citing and quoting *Procter & Gamble Co. v. Teva Pharm. USA, In*c., 566 F.3d 989, 994 (Fed. Cir. 2009), which quotes *Pfizer, Inc. v. Apotex, Inc*., 480 F.3d 1348, 1361 (Fed. Cir. 2007)).

"In considering motivation in the obviousness analysis, the problem examined is not the specific problem solved by the invention. …. Defining the problem in terms of its solution reveals improper hindsight in the selection of the prior art relevant to obviousness. … [A]n overly narrow "statement of the problem can represent a form of prohibited reliance on hindsight, because often the inventive contribution lies in defining the problem in a new revelatory way." *Insite Vision* at 859 (citing and quoting *In re Kahn*, 441 F.3d 977, 988 (Fed. Cir. 2006); *Monarch Knitting Mach. Corp. v. Sulzer Morat GmbH*, 139 F.3d 877, 881 (Fed. Cir. 1998); *Mintz v. Dietz & Watson, Inc*., 679 F.3d 1372, 1377 (Fed. Cir. 2012)).

B. ENABLEMENT

"Whether a prior art reference is enabling is a question of law based on underlying factual findings." *In re Morsa*, 803 F.3d 1374, 1376 (Fed. Cir. 2015) (citing *Impax Labs., Inc. v. Aventis Pharm., Inc.*, 545 F.3d 1312, 1315 (Fed.Cir.2008)). "Enablement of prior art requires that the reference teach a skilled artisan—at the time of filing—to make or carry out what it discloses in relation to the claimed invention without undue experimentation. For a prior-art reference to be enabling, it need not enable the claim in its entirety, but instead the reference need only enable a single embodiment of the claim." *In re Morsa*, *supra*, 803 F.3d at 1377 (citing *In re Antor Media Corp*., 689 F.3d 1282, 1289–90

(Fed.Cir.2012) and *Schering Corp. v. Geneva Pharm*., 339 F.3d 1373, 1381 (Fed.Cir.2003)).

In determining obviousness, it is correct that a non-enabling reference may be considered for all that it teaches in determining obviousness under 35 U.S.C. 103. *Beckman Instrumentsv.LKB Produkter AB*, 892 F.2d 1547, 1551 (Fed. Cir. 1989) ; *Symbol Techs. Inc. v. Opticon Inc*., 935 F.2d 1569, 1578 (Fed. Cir. 1991) ; *Amgen Inc. v. Hoechst Marion Roussel, Inc*., 314 F.3d 1313, 1357 (Fed. Cir. 2003).

Nevertheless, a disclosure of a method or a product in the prior art does not render a patent on the method or product invalid for obviousness if the prior art does not disclose any method of achieving the stated goal:

> … if the prior art teaches a mixture containing a compound but does not enable its purification, then the purified form of the compound may not have been obvious over the prior art mixture.

Mylan Institutional LLC v. Aurobindo Pharma Ltd., 857 F.3d 858, 871 (Fed. Cir. 2017) .

The pre-AIA 35 U.S.C. 103(a) provided that patent claims would be rejected if "the subject matter as a whole would have been obvious at the time the invention was made to a person having ordinary skill in the art to which said subject matter pertains." A claimed invention cannot be obvious to a skilled artisan if the prior art as a whole does not disclose an operable method. In this case, no prior art disclosed any method for sharing information between two different protocols,

and, thus, there can be no obviousness. Petitioner cannot invalidate an invention directed to a method of sharing information between two different protocols by proposing prior art that, at best, simply says – "share information" – but without disclosing how to do that.

Thus, if the prior art as a whole does not teach how to share information between two different protocols, then claims directed to such sharing cannot be obvious. Mere naming or description of the subject matter is insufficient, if it cannot be produced without undue experimentation. *Elan Pharm., Inc. v. Mayo Found. For Med. Educ. & Research*, 346 F.3d 1051, 1054 (Fed. Cir. 2003) (At issue was whether a prior art reference enabled one of ordinary skill in the art to produce Elan's claimed transgenic mouse without undue experimentation. Without a disclosure enabling one skilled in the art to produce a transgenic mouse without undue experimentation, the reference would not be applicable as prior art"); MPEP §2121.01.

A reference contains an "enabling disclosure" if the public was in possession of the claimed invention before the date of invention. "Such possession is effected if one of ordinary skill in the art could have combined the publication's description of the invention with his [or her] own knowledge to make the claimed invention." *In re Donohue*, 766 F.2d 531 (Fed. Cir. 1985); MPEP §2121.01.

VIII. GROUND 1: PETITIONER FAILS TO SHOW THAT CLAIMS 8-19 ARE OBVIOUS OVER POSADAS, STEWART, AND WENSE.

Petitioner's challenge to Claims 8-19 of the '705 Patent, alleging obviousness of the claims over Posadas, Stewart, and Wense, should be denied entirely. To establish a *prima facie* case of obviousness, Petitioner must first demonstrate that every element of a challenged patent claim is disclosed in the proffered prior art. As will be detailed below, the Posadas, Stewart, and Wense references fail to disclose critical elements of the '705 Patent claims. Further, Petitioner's obviousness challenge is inadequate because irrespective of the presence or absence of disclosure by the proffered references, a person of skill in the art at the time of the invention of the '705 Patent would not have been motivated to combine them. Thus, Petitioner's challenge on Ground 1 to Claims 8-19 of the '705 Patent fails entirely.

A. Claim 7

Patent Owner's arguments are first directed to Petitioner's challenge of the representative independent claim 7, the elements of which are listed below:

7a	A non-transitory computer-readable medium storing a computer program product for sharing information, the computer program product comprising:
7b	computer code for allowing receipt of information associated with a message, utilizing a first network protocol associated with a first network;
7c	computer code for causing a determination as to whether a storage resource is available;

7d	computer code for, in the event the storage resource is not available, determining whether a timeout has been reached and causing a re-request in connection with the storage resource;
7e	computer code for, in the event the storage resource is available and the timeout has not been reached, causing storage of the information utilizing the storage resource;
7f	computer code for, in the event the timeout has been reached, causing an error notification to be sent;
7g	and computer code for causing the information to be shared by: in real-time, sharing the information utilizing at least one message format corresponding to a second network protocol associated with a second network which is different from the first network protocol;
7h	wherein the computer program product is associated with an electronic control unit with at least one gateway function, and a plurality of interface portions including:
7i	a first interface portion for interfacing with the first network,
7j	the first interface portion including a first interface-related first layer part for receiving first interface-related first layer messages and a first interface-related second layer part, the first interface-related first layer messages being processed after which first interface-related second layer messages are provided,
7k	where the first network is at least one of a Controller Area Network, a Flexray network, or a Local Interconnect Network;
7l	and a second interface portion for interfacing with the second network,
7m	the second interface portion including a second interface-related first layer part for receiving second interface-related first layer messages and a second interface-related second layer part, the second interface-related first layer messages being processed after which second interface-related second layer messages are provided,
7n	where the second network is different from the first network and is at least one of the Controller Area Network, the Flexray network, or the Local Interconnect Network.

Limitation 7c

Limitation 7c requires "computer code for causing a determination as to whether a storage resource is available."

Petitioner argues that Posadas discloses this limitation because "Determining whether memory is available prior to writing is a basic, fundamental, and of course, well-known step in storing information." Pet. at 14-15. Although determining memory availability may have been known in the prior art, Posadas does not expressly disclose the step, and Petitioner has not presented any evidence that the step was necessarily inherent with every computer storage mechanism at the time of invention. Exh. 2006, ¶55. Federal Circuit law establishes a "high standard in order to rely on inherency to establish the existence of a claim limitation in the prior art in an obviousness analysis[.]" *Par Pharm., Inc. v. TWI Pharm., Inc*., 773 F.3d 1186, 1195–96 (Fed. Cir. 2014). The limitation at issue either must necessarily be present, or must be the natural result of the combination of elements explicitly disclosed by the prior art. *Id*. There is no evidence in the record, and the Board cannot find, that Posadas satisfies this standard.

Petitioner next argues that Stewart discloses this limitation, and that a skilled artisan would combine Posadas and Stewart. Pet. at 13-15. This argument fails, because Posadas discloses a particular distributed blackboard storage system that includes an undisclosed storage medium utilizing an unknown process. Thus,

Posadas states that his blackboard is fashioned on a structure identified as "Penny, 1989." Yet, attempts to identify that system were not successful. Exh. 2006, ¶52.

In any event, Posadas does not use a "shared memory." In fact, Posadas states that "each computer has a partial copy of the blackboard." (p. 153). Further, the depiction of the storage resource:

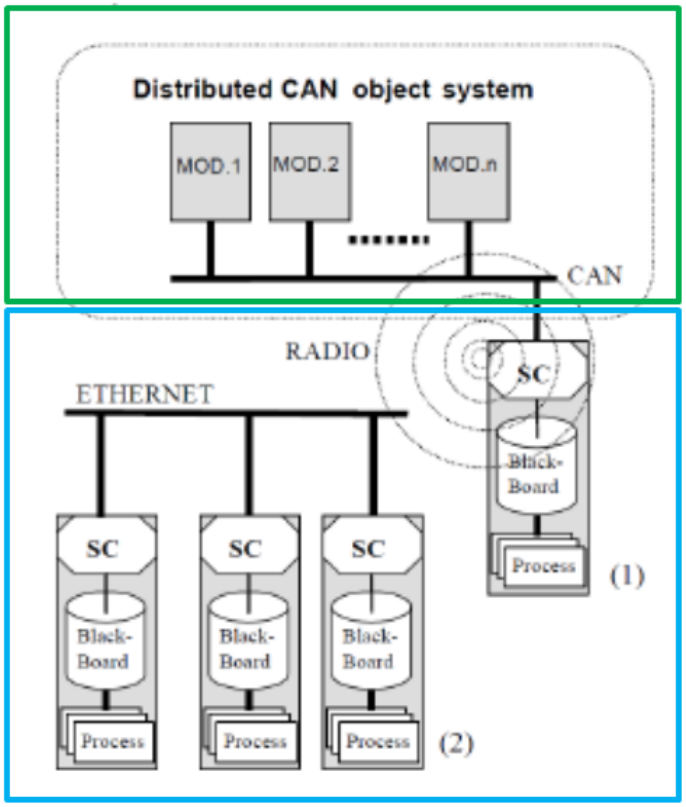

Fig. 4: Distributed blackboard structure.

indicates that, rather than there being a shared memory, all the data is stored in particular silos, with each silo having its own processor performing undisclosed operations. There is too much possibility that the silos shown in Posadas –

combining both a blackboard and a processor—present unique issues to assume anything about whether some unrelated technology could be combined with such a unique Posadas environment. *Id*.

Limitation 7d

Limitation 7d requires "computer code for, in the event the storage resource is not available, determining whether a timeout has been reached and causing a re-request in connection with the storage resource."

Petitioner admits that Posadas does not disclose this limitation, but argues that Stewart does, and that a skilled artisan would combine Posadas and Stewart. Pet. at 18-19. This argument fails, because, as noted above, Posadas discloses a particular distributed blackboard storage system that does not appear to have any relationship to Stewart's shared memory. Exh. 2006, ¶59.

Limitation 7e

Limitation 7e requires "computer code for, in the event the storage resource is available and the timeout has not been reached, causing storage of the information utilizing the storage resource."

Petitioner again admits that Posadas does not disclose this limitation, but argues that Stewart does, and that a skilled artisan would combine Posadas and Stewart. Pet. at 19. This is incorrect because, as noted above, Posadas discloses a

particular distributed blackboard storage system that does not appear to have any relationship to Stewart's shared memory. Exh. 2006, ¶62.

Limitation 7f

Limitation 7f requires "computer code for, in the event the timeout has been reached, causing an error notification to be sent."

Petitioner again admits that Posadas does not disclose this limitation, but argues that Stewart does, and that a skilled artisan would combine Posadas and Stewart. Pet. at 20. But, Stewart does not disclose this limitation. Petitioner argues that Stewart discloses an "error handler," and argues that having an "error handler" is the same as sending a notification. *Id*. Petitioner errs.

Stewart actually stated:

> When using the time-out mechanism, error handlers should be installed to detect tasks that suffer successive time-out errors. **Discussion on handling these errors is beyond the scope of this paper**.

Pg. 11 (emphasis added).

Thus, Stewart does not disclose "sending a notification." Petitioner's suggestion that Stewart's reference to "error handler" constitutes "causing an error notification to be sent" is merely unfounded and erroneous speculation. The typical meaning of an "error handler" is a mechanism that forestalls errors if possible, and then recovers from errors when they occur without terminating the

application. Exh. 2006, ¶66. "Error handler" does not necessarily or inherently include sending a notification, as required by Claim 7 of the Patent.

In fact, Stewart states that the "discussion on handling these errors is beyond the scope of this paper," which expressly disclaims the disclosure of any particular error-handling method, and, thus, expressly excludes disclosing the sending of any notification. Petitioner does not point to any function or structure in Stewart which sends "a notification." Stewart does not disclose claim element 7f.

That a notification might be a type of an error handler is legally irrelevant. Again, inherency is a high standard, which Petitioner has not even attempted to meet. There is no evidence in the record, and the Board cannot find, that Stewart satisfies this standard.

Finally, Posadas and Stewart cannot be combined, because, as noted above, Posadas discloses a particular distributed blackboard storage system that does not appear to have any relationship to Stewart's shared memory. Exh. 2006, ¶67.

Limitation 7g

Limitation 7g requires "computer code for causing *the information* to be shared by: in real-time, sharing *the information* utilizing at least one message format corresponding to a second network protocol associated with a second network which is different from the first network protocol."

Petitioner again argues that Posadas discloses this limitation. Petitioner errs.

Petitioner posits the following annotated figure (Pet. at 21):

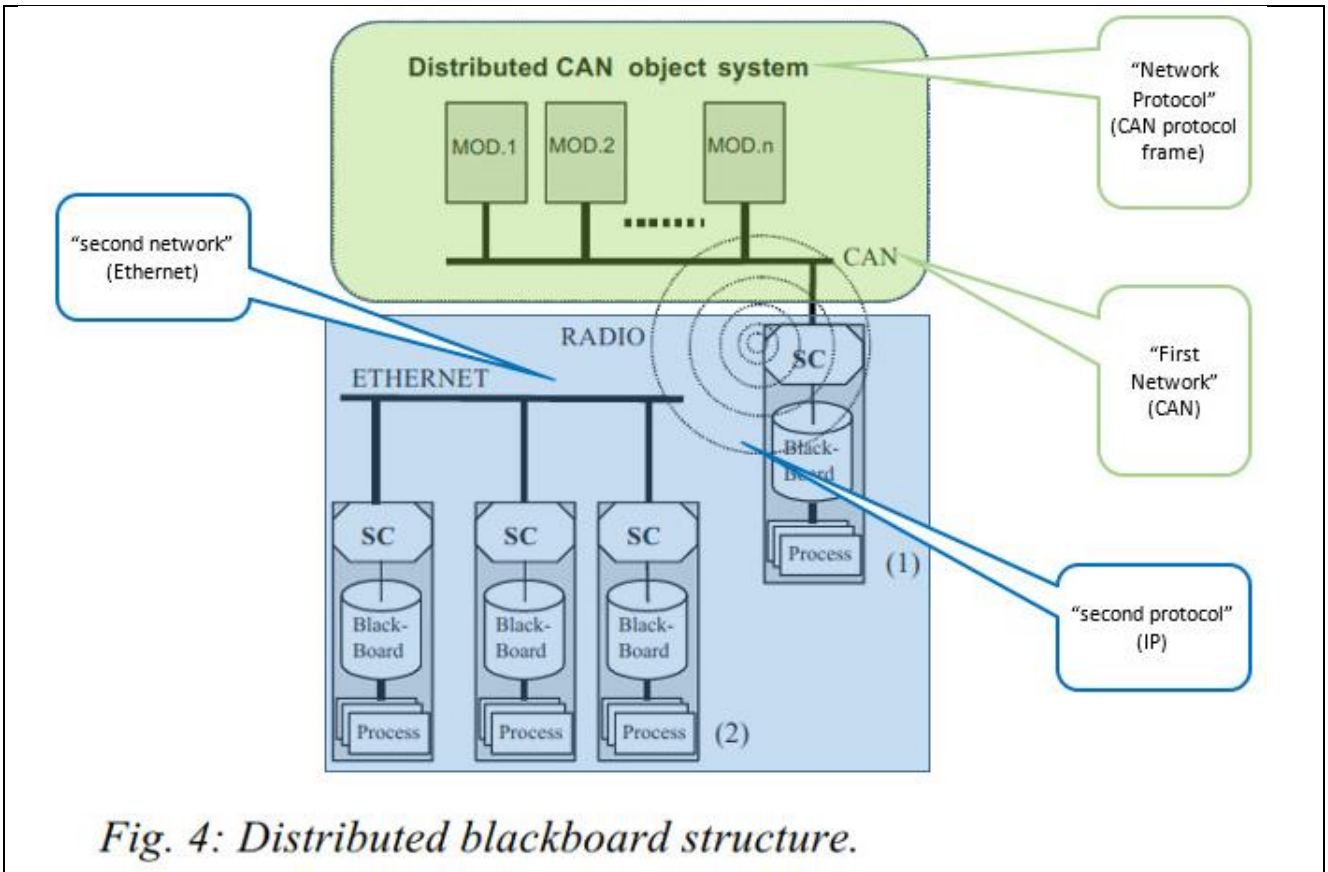

Fig. 4: Distributed blackboard structure.

Petitioner, however, ignores the critical claim language. The limitation requires sharing "the information." The "the information" in this limitation 7g refers to information that was received utilizing a first network protocol associated with a first network (limitation 7b), and which was stored in the storage resource (limitation 7e). That information has to then be shared "utilizing at least one

message format corresponding to a second network protocol associated with a second network which is different from the first network protocol."

Petitioner argues that "information" is distributed and stored in the various blackboards shown in the above annotated figure. Pet. at 18-19. Therefore, the information in Posadas was stored via the network that begins with CAN and ends with the blackboards shown in the silos. That would then have to be "the information" which has to be shared to comport with the present Patent. Then, however, any "sharing" of "the information" would travel along the identical pathway by which it was delivered – i.e., the same network. There is no "second network" that shares "the information" provided by the "first network" because there is only one and only one network by which information is stored and accessed in Posadas' blackboards. Exh. 2006, ¶71.

For the same reason, there is no difference in protocols between the first and second networks. Exh. 2006, ¶72.

In short, Petitioner completely ignores that the limitation requires that "the information" is obtained via a first network using a first protocol, and then shared with a second network using a second and different protocol. When you travel on the same one lane road to and from two destinations, you are retracing the same path using the same road, not using a different road.

In reality, the entire section shown in blue in Petitioner's figure is a single storage resource, albeit a distributed storage resource. The internal mechanism for distributing data between the blackboard silos does not demonstrate "utilizing at least one message format corresponding to a second network protocol associated with a second network which is different from the first network protocol." Exh. 2006, ¶74.

Limitation 7i,j

Limitations 7i,j require "a first interface portion for interfacing with <u>the first network</u>, the first interface portion including a first interface-related first layer part for receiving first interface-related first layer messages and a first interface-related second layer part, the first interface-related first layer messages being processed after which first interface-related second layer messages are provided."

It is unlikely that Posadas discloses the entirety of limitations 7i,j. Exh. 2006, ¶76. However, Posadas clearly does not disclose limitations 7 l-m.

Limitation 7l,m,n

Limitations 7l,m,n require "a second interface portion for interfacing with <u>the</u> second network, the second interface portion including a second interface-related first layer part for receiving second interface-related first layer messages and a second interface-related second layer part, the second interface-related first layer messages being processed after which second interface-related second layer

messages are provided, where the second network is different from the first network and is at least one of the Controller Area Network, the Flexray network, or the Local Interconnect Network."

Posadas does not disclose these limitations. Petitioner's arguments for these limitations completely ignore the language of the claim limitations. The limitations refer to "the second network." That "the second network" clearly refers to the second network described in the antecedent limitation as the second network utilizing a second different protocol which is the recipient of the "shared" information connected to the storage resource, where the second network is different from the first network.

Petitioner argues that the "Radio Ethernet" presents the second interface, and presents the following annotated figures:

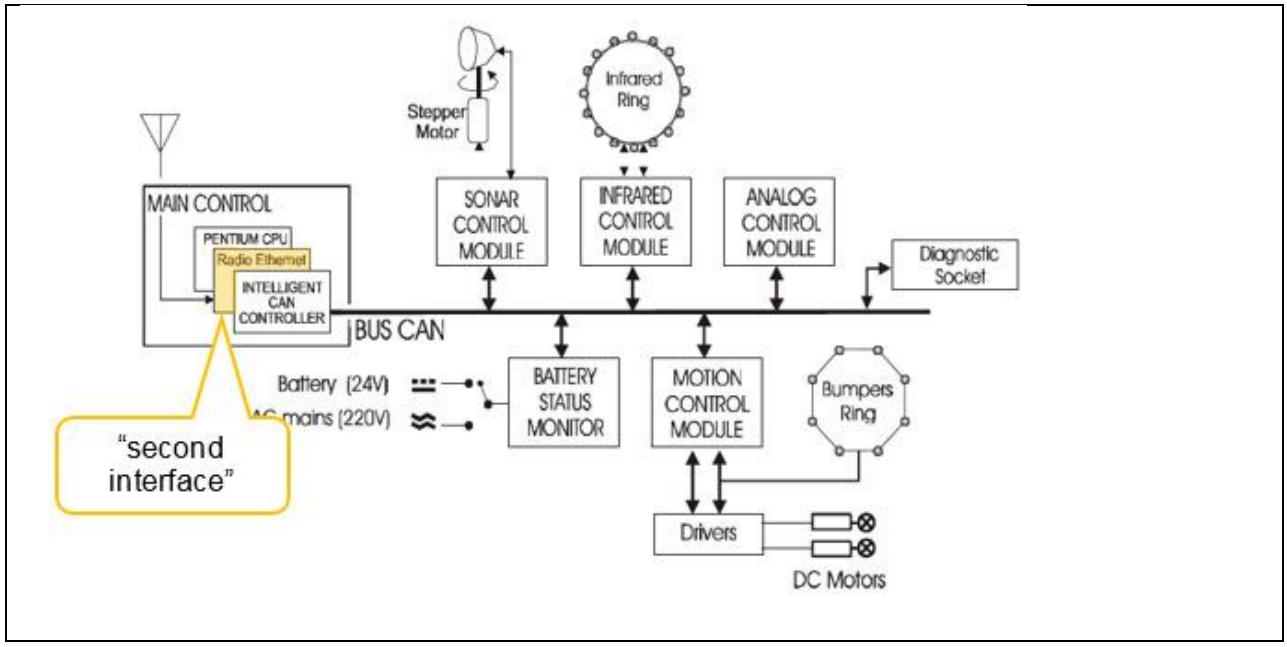

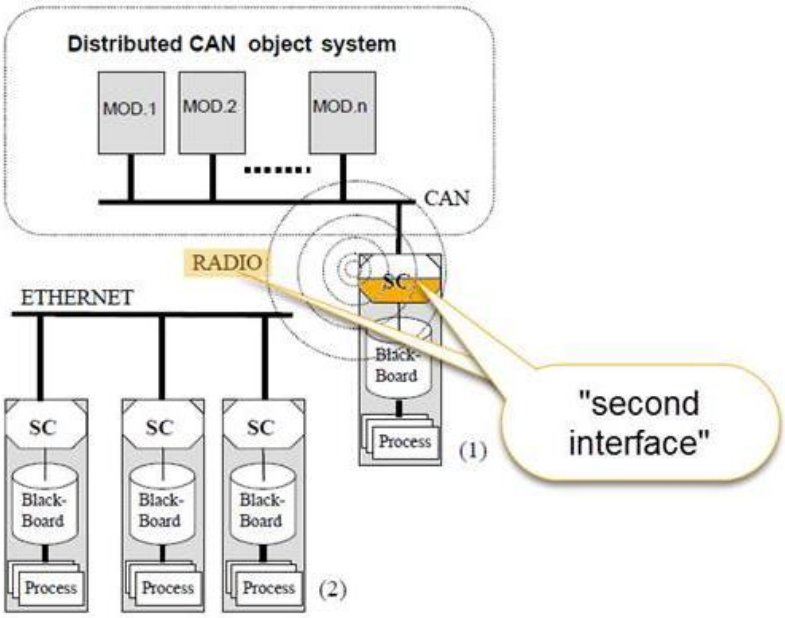

Fig. 4: Distributed blackboard structure.

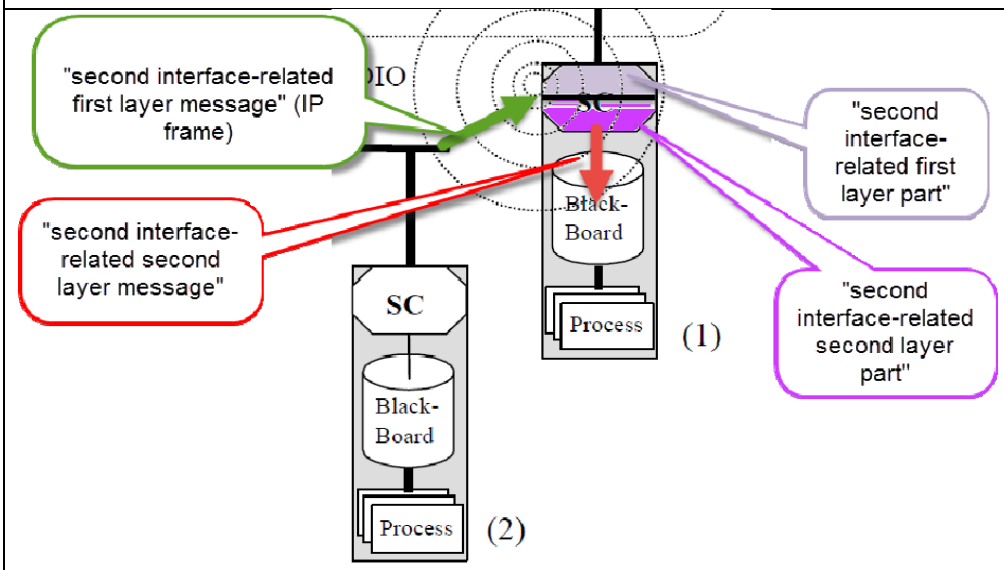

Petitioner is plainly in error, because Petitioner is pointing to the same interface as it argued was the first interface to the first network. Petitioner attempts

to get around that obvious problem by utilizing different figures for the first and second interfaces, but those figures depict the same structures, and Petitioner is pointing to the same elements, albeit in different depictions.

Again, Petitioner's attempts only underscore the basic problem that Posadas discloses only a CAN network communicating with a storage device that includes an internal communication structure. However, all communications travel via the same structures. The limitation is entirely missing in Posadas.

Petitioner alleges that element 7n is met by Posadas' description of the blackboard interface, which may comprise "ethernet, DDE, RS232, and so on," combined with Wense's description of the LIN network. The problem with Petitioner's argument, as before, is that what Petitioner alleges to be Posadas' alleged "second network" is the same network that is the first network – the network communicating from the modules to the blackboard.

Moreover, a person of ordinary skill in the art at the time the Patent was filed would not have been motivated to combine Wense with Posadas to arrive at the invention claimed by the Patent. There is simply no provision for the claimed second network in Posadas. Exh. 2006, ¶84.

B. Claim 8

Claim 8 is dependent from claim 7, and requires in addition to the elements of claim 7 that "the storage resource includes a bulletin board." Petitioner argues

that the "distributed blackboard system" of Posadas discloses the "bulletin board" storage resource required by Claim 8. Pet. at 42.

This is incorrect, because the term "bulletin board" is not the same as Posadas' distributed blackboard. The Patent states:

> The approach uses a common, or shared storage system that is connected to all of the system networks through network interfaces. A critically important feature of the bulletin board approach is that the complexity of the bulletin board grows linearly with the number of networks (as opposed to as N(N-1) for the gateway approach), and in one-to-many situations the number of message transformations is half that of the standard networking approach.

Exh. 1001, 7:30-37. The bulletin board is also depicted in Figure 6.

In contrast, Posadas has distributed blackboard, where every silo has its own SC interface, processor and only part of the entire blackboard.

For this reason and all the reasons set forth above with respect to Claim 7, the combination of Posadas, Stewart, and Wense does not disclose every element of Claim 8, nor would a person of ordinary skill have been motivated to combine them to arrive at the invention of the '705 Patent. Exh. 2006, ¶89.

C. Claim 10

Claim 10 is dependent from claim 7, and requires in addition to the elements of claim 7 that the "computer program product is operable such that at least one of the different processes process the information in a manner that is isolated from temporal characteristics associated with at least one of a plurality of heterogeneous

networks." Petitioner first points to a description of an application process' use of a bulletin board retrieve mechanism in the '705 Patent, which "decouples" the application process from the temporal behavior of the input/output variables. Pet. at 43; Exh. 1001,8:64-9:2 and Fig. 12. Petitioner then argues that Posadas' "selective processing" of ASCII-Hex representations of CAN binary streams, processes that "translate . . . information using a supplied object toolbox" and "use of defined filtering by applying the SC general bind-notification stream" reveal processing of information in a manner that is isolated from the temporal characteristics of a network. Pet. at 43-44. Petitioner ignores the antecedent basis of the "different processes" of Claim 10, which lie in claim elements 7j and 7m. The "processing" in the context of the claim is the processing of the "first interface-related first layer messages" and the "second interface-related first layer messages." Petitioner refers to "processes" broadly, without a tether to the language of the claim, and has not shown that the "processing," "translat[ion]," or "defined filtering" of Posadas are in relation to any interface-related first-layer message, or for that matter "isolated from temporal characteristics associated with at least one" network. Exh. 2006, ¶90.

For this reason and all the reasons set forth above with respect to Claim 7, the combination of Posadas, Stewart, and Wense does not disclose every element of Claim 10, nor would a person of ordinary skill have been motivated to combine them to arrive at the invention of the '705 Patent. Exh. 2006, ¶91.

D. Claim 11

Claim 11 is dependent from claim 7, and requires in addition to the elements of claim 7 that "the computer program product is operable such that the information is shared with an operating system." Petitioner alleges this limitation is expressly disclosed by Stewart, in the form of the "Chimera II Real-time Operating system." Pet. at 44. As argued previously, there would be no motivation to combine Stewart with Posadas. *See* Exh. 2006, ¶ 57. Moreover, Petitioner acknowledges that the operating system present in Posadas, Windows NT, is not a real-time operating system. *See* Pet. at 45. Petitioner's argument–that one of ordinary skill would have seen the substitution of the Chimera II real-time operating system for Windows NT as a "simple and obvious design choice"–overlooks the fact that Stewart's Chimera II operating system was confined to a single bus. *See* Exh. 1007 at §IV, p.329. Adaptation of a real-time operating system to a multiple-bus apparatus would have required undue experimentation and would not, contrary to Petitioner's assertion, have been an obvious design choice. Exh. 2006, ¶92.

Petitioner appears to conflate *requiring an operating system* to operate with *sharing information with an operating system*, stating the following:

> Posadas disclose sharing information with the Windows NT operating system. *Id.*,152; 151 ("the SC software enables ***the main robot controller (Windows NT based) to communicate*** transparently through different channels: CAN, Ethernet, DDE, RS232, and so on.").

Pet. at 45. Nothing about the "main robot controller" communicating through "different channels" discloses *sharing* of information with the Windows NT operating system itself. Petitioner appears to assume that the mere presence of an operating system is sufficient to demonstrate sharing of information with it, but this cannot be true–information can certainly pass from Posadas' CAN network through the storage's Ethernet network without the information being "shared" with the operating system. Petitioner has not pointed to anything in Posadas that discloses *sharing* of information with the Windows NT operating system, and as already argued, Petitioner's argument for disclosure of such sharing by Stewart's operating system fails. Exh. 2006, ¶93.

For these reasons and all the reasons set forth above with respect to Claim 7, the combination of Posadas, Stewart, and Wense does not disclose every element of Claim 11, nor would a person of ordinary skill have been motivated to combine them to arrive at the invention of the '705 Patent. Exh. 2006, ¶94.

E. Claim 18

Claim 18 is dependent from claim 7, and requires in addition to the elements of claim 7 that **"**the computer program product is operable such that multiple modes of operation are enabled, wherein at least one of the modes includes a diagnostic mode." Petitioner first identifies a basis for the claim term in the written specification of the '705 Patent: "[t]he emergency or debug mode lets the network

run in a fail-safe reduced operation mode or in a diagnostic mode that allows inspection of the system." Exh. 1001, 11:59-62; Pet. at 49. Next Petitioner points to Fig. 2 in the Posadas reference, which displays a "Diagnostic Socket" and which, Petitioner asserts, would indicate to a person of ordinary skill that the Posadas system "allows" a diagnostic mode. Pet. at 49. Finally, Petitioner asserts that Posadas' "REC" module, for testing reactive control based on a local map, represents a "diagnostic mode." *See* Pet. at 50.

Posadas states that the REC module "was running in a node outside the CAN network and communicated through a wireless IP network and the described SC+ISSCAN facilities." Exh. 1006 at 154. Posadas' Fig. 2 displays the "Diagnostic Socket" as directly connected to the CAN bus. *Id*. at 152, Fig. 2. Nowhere in the text of Posadas is there reference to the "Diagnostic Socket" or its function. Because the Diagnostic Socket is evidently a hardwired connection on the CAN bus, the described REC module, which communicates with the system via wireless network, does not use it. By itself, the presence of a Diagnostic Socket does not dictate the presence of a "Diagnostic Mode." No additional diagnostic or "debugging" mode of operation is expressly disclosed by Posadas. Exh. 2006, ¶96.

"Diagnostic mode" should be understood as "an alternate mode of operation, distinct from normal operations, that still allows inspection of the system while it is running." *See* § 0, *supra*. Petitioner overlooks the extensive description of

alternative operating modes in the specification. *See id*. The purpose of these modes is to "provide for a guaranteed deterministic behavior of the system." Exh. 1001, 11:52-53. At most, Posadas' REC module was a temporary implementation directed to testing a portion of the communication system in prototype form, not "an alternate mode of operation." *See* Exh. 1006 at 154 ("Testing Prototype"). The REC module does not disclose a regular component of the system which provides an alternative mode of operation for diagnostic purposes; for that matter, the REC module does not clearly disclose a second mode of operation at all, as required by Claim 18. Exh. 2006, ¶97.

For these reasons and all the reasons set forth above with respect to Claim 7, the combination of Posadas, Stewart, and Wense does not disclose every element of Claim 18, nor would a person of ordinary skill have been motivated to combine them to arrive at the invention of the '705 Patent. Exh. 2006, ¶98.

Claim 19

Claim 19 is dependent from claim 7, and requires in addition to the elements of claim 7 that "the computer program product is operable such that at least a portion of the message is processed at each of a plurality of layers." Petitioner asserts that Posadas discloses this element based on Petitioner's previous arguments regarding elements 7j and 7m:

> As discussed above in connection with limitation 7j, the first interface portion includes a first interface –related ***second layer*** part**"** that

> processes the first interface-related first layer message. Exh. 1004,¶233. Likewise, as discussed in connection with limitation 7m, the second interface portion includes a second interface-related second ***layer*** part, which processes the second interface-related first layer message. *Id*. Thus, for the same reasons discussed in connection with limitations 7j and 7m, Posadas discloses that at least a "portion of the message is "processed" at a "plurality of layers."

Pet. at 51. As already argued with respect to claim element 7m, Posadas does not disclose a second interface-related second layer part which processes a second interface-related first layer message. Therefore, Posadas does not disclose that "at least a portion of the message is processed at each of a plurality of layers," as required by Claim 19. Exh. 2006, ¶99.

For these reasons and all the reasons set forth above with respect to Claim 7, the combination of Posadas, Stewart, and Wense does not disclose every element of Claim 19, nor would a person of ordinary skill have been motivated to combine them to arrive at the invention of the '705 Patent. Exh. 2006, ¶100.

IX. GROUND 2: PETITIONER FAILS TO SHOW THAT CLAIMS 8-19 ARE OBVIOUS OVER MIESTERFELD, STEWART, AND WENSE.

Petitioner's challenge to Claims 8-19 of the '705 Patent, alleging obviousness of the claims over Miesterfeld, Stewart, and Wense, should be denied entirely. To establish a *prima facie* case of obviousness, Petitioner must first demonstrate that every element of a challenged patent claim is disclosed in the proffered prior art. As will be detailed below, the Miesterfeld, Stewart, and Wense references fail to disclose critical elements of the '705 Patent claims. Further,

Petitioner's obviousness challenge is inadequate because irrespective of the presence or absence of disclosure by the proffered references, a person of skill in the art at the time of the invention of the '705 Patent would not have been motivated to combine them. Thus, Petitioner's challenge on Ground 2 to Claims 8-19 of the '705 Patent fails entirely.

A. Claim 7

Limitation 7d

Limitation 7d requires "computer code for, in the event the storage resource is not available, determining whether a timeout has been reached and causing a re-request in connection with the storage resource."

Petitioner argues that Stewart discloses this limitation, and that a skilled artisan would combine Miesterfeld and Stewart. Pet. at 54-58. Petitioner's argument fails. Miesterfeld discloses a system where communication access to the shared memory is hardware-based:

> Data exchange between VDB 48 and ancillary or ITS data bus 56 occurs through the gateway 40 comprising vehicle data bus (VDB) transceiver 60, vehicle data bus (VDB) interface 62, and memory or serial peripheral interface random access memory (SPI RAM) 64, and ITS data bus interface 58. SPI RAM 64 is preferably arranged as described above with respect to memory 30. SPI bus 66 interconnects VDB interface 62 and ITS data bus interface 58 with SPI RAM 64. A <u>plurality of handshake lines 68 interconnect VDB interface 62 and ITS data bus interface 58 so that handshake signals may be exchanged therebetween to coordinate access to SPI RAM 64</u>. VDB transceiver 60 provides an interface between VDB 48 and VDB interface 62. VDB transceiver 60 thus exchanges data between VDB 48 and VDB

interface 62. Preferably, VDB 48, VDB transceiver 60, and VDB interface 62 are configured to implement the J1850 configuration as prescribed by the Society of Automotive Engineers (SAE) or any other industry standard as may be required.

In operation, VDB interface 62 controls data flow between VDB 48 and SPI RAM 64. In particular, VDB interface 62 examines data on VDB 48 to determine if it is pertinent to ITS data bus 56 and to determine the appropriate location in SPI RAM 64 to write the data. In such instances, VDB interface 62 writes its data to a selected, specific memory location, such as to memory locations PAR1, PAR2, PARN, as described in FIG. 1. Further, VDB interface 62 obtains commands from memory locations COM1, COM2, . . . , COMN in SPI RAM 64 and determines whether the command is appropriately formed for transmission on VDB 48. VDB interface 62 also coordinates read/write functions with ITS data bus interface 58 through a handshake procedure in order to avoid collisions between read/write activities of the respective vehicle data bus interface 62 and ITS data bus interface 58. VDB interface 62 is also responsible for insuring security of the data placed on VDB 48 by insuring that only appropriate data is written to SPI RAM 64. VDB interface 62 also insures security of VDB 48 by inspecting commands prior to placing any the command on VDB 48.

***

In order to prevent collisions when accessing SPI RAM 64, a pair of handshake lines 68a, 68b carry signals to arbitrate access to SPI RAM 64. Handshake line 68a or SPI RAM Access Acquired (SRAA) is set high when a master device is accessing SPI RAM 64. This signal also functions as a input to chip enable pin 6 CE of SPI RAM 64. Handshake line 68b or SPI RAM Access Denied (SRAD) receives an output signal from VDB interface 62 when VDB interface 62 is accessing SPI RAM 64. In operation, SRAA is set high if ITS data bus interface 58 is accessing SPI RAM 64, and SRAD is set high if VDB interface 62 is accessing SPI RAM 64, as will be described further herein.

These are shown in Figures 2, 3A and 3B. See, for example:

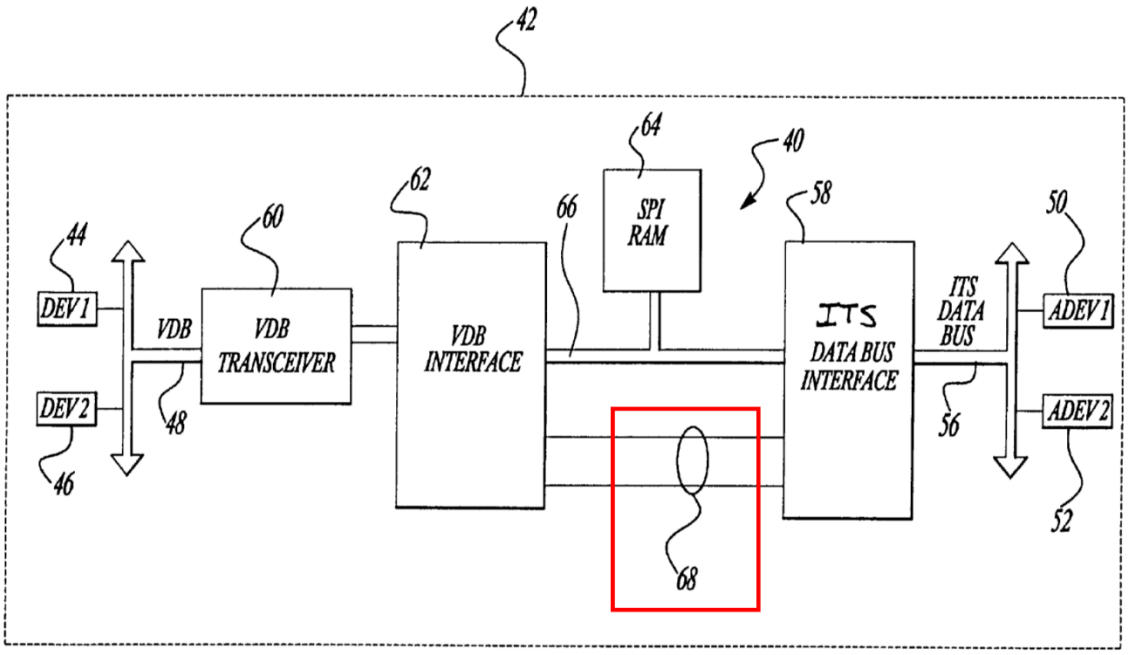
42
64
40
62
66
58
50
44
60
SPI
RAM
DEV 1
VDB
VDB
TRANSCEIVER
VDB
INTERFACE
ITS
DATA BUS
INTERFACE
ITS
DATA
BUS
ADEV 1
DEV 2
48
56
ADEV 2
46
52
68

Fig-2

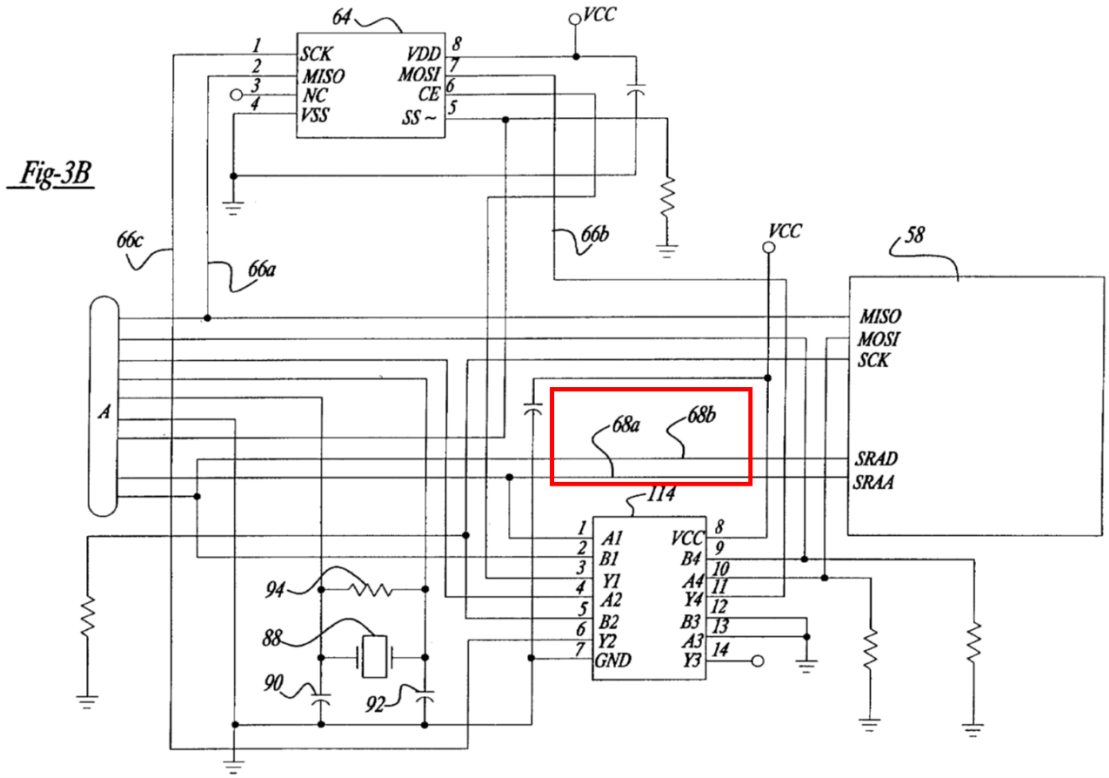
64
VCC
SCK
MISO
NC
VSS
VDD
MOSI
CE
SS ~
66c
66a
66b
VCC
58
MISO
MOSI
SCK
A
68a
68b
SRAD
SRAA
114
A1
B1
Y1
A2
B2
Y2
GND
VCC
B4
A4
Y4
B3
A3
Y3
94
88
90
92

Fig-3B

Petitioner ignores this aspect of Miesterfeld. Yet, Miesterfeld's requirement of these handshake lines 68a, 68b is inconsistent with Stewart. Petitioner has not explained how to mediate this inconsistency between Miesterfeld and Stewart. Exh. 2006, ¶104.

Stewart is also different from Miesterfeld, because Stewart comprises only one network. Thus, Miesterfeld and Stewart disclose fundamentally different approaches to using a shared memory. Exh. 2006, ¶105.

Limitation 7f

Limitation 7f requires "computer code for, in the event the timeout has been reached, causing an error notification to be sent."

Petitioner makes the identical argument here as it did with respect to Ground A. Petitioner's argument fails, because Petitioner fails to demonstrate obviousness of Claim 7, at least because no combination of Miesterfeld, Stewart, and Wense discloses element 7f. Again, Petitioner argues that

> Stewart discloses that a time-out error will occur if a time-out has been reached for a task that has been continually trying to accessing the table but has been unsuccessful. Exh. 1007,11 ("a time-out mechanism is used, so that if the lock is not gained within a pre-specified time or number of retries, then the transfer is not performed. . . . When using the time-out mechanism, error handlers should be installed to detect tasks that suffer successive time-out errors."); Exh. 1004, ¶260.

Pet. at 59. Petitioner is incorrect. Petitioner relies entirely on the following discussion in Stewart that discusses a "time-out mechanism" and an associate "error handler":

> Without a bounded waiting time locking mechanism, it is not possible to guarantee that tasks will get the data they require on time, every time. As an alternative, a time-out mechanism is used, so that if the lock is not gained within a pre-specified time or number of retries, then the transfer is not performed. The maximum waiting time for the lock is then the time-out period, which is also equal to polling_time * max_number_of_retries. For most tasks in a control system, missing an occasional-cycle is not be critical. In such a case, the value from the previous cycle still remains in the local table, and will be used during the next cycle. When using the time-out mechanism, error handlers should be installed to detect tasks that suffer successive time-out errors. **Discussion on handling these errors is beyond the scope of this paper.**

(P. 11) (emphasis added).

As plainly apparent from the above excerpt, Stewart does not disclose "sending a notification." Petitioner's apparent suggestion that Stewart's reference to "error handler" constitutes "sending a notification" is unfounded and is merely erroneous speculation. The typical meaning of an "error handler" is a mechanism that forestalls errors if possible, and then recovers from errors when they occur without terminating the application. "Error handler" does not necessarily or inherently include sending a notification, as required by Claim 7 of the '705 Patent. In fact, Stewart states that the "discussion on handling these errors is beyond the scope of this paper," which expressly disclaims the disclosure of any particular

error-handling method, and, thus, expressly excludes disclosing the sending of any notification. Petitioner does not point to any function or structure in Stewart which sends "a notification." Stewart does not disclose claim element 7f. Exh. 2006, ¶108.

Limitation 7g

Limitation 7g requires "computer code for causing the information to be shared by: in real-time, sharing the information utilizing at least one message format corresponding to a second network protocol associated with a second network which is different from the first network protocol."

Petitioner again argues that Miesterfeld discloses this limitation, and shows the following annotated figure (Pet. at 59-61):

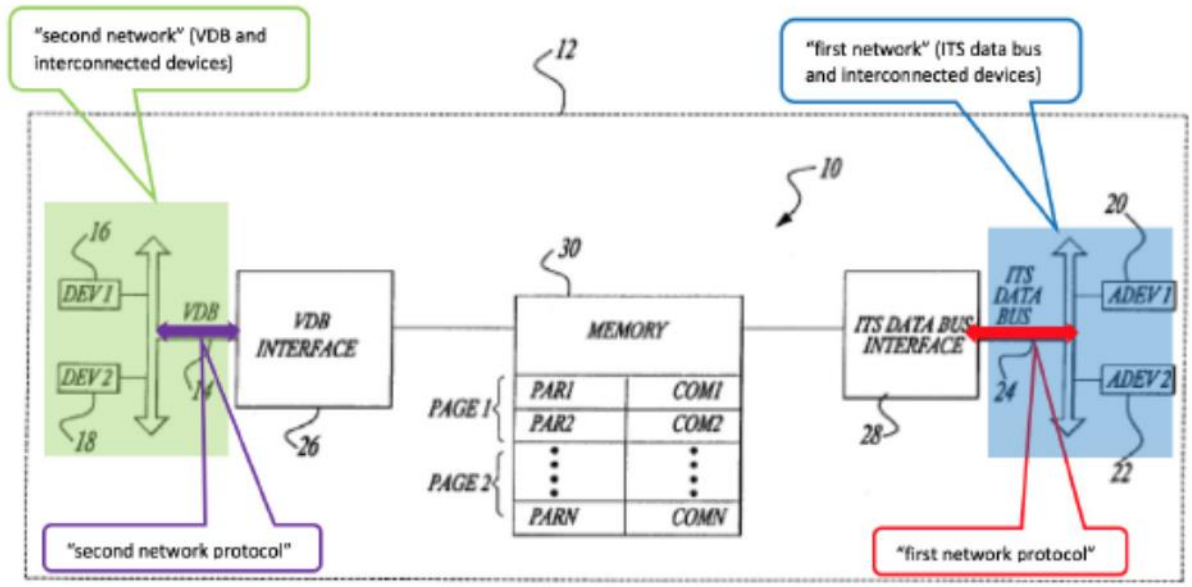

Fig-1

Petitioner errs. Petitioner again ignores the critical claim language. The limitation requires sharing "the information." The "the information" in this limitation 7g refers to information that was received utilizing a first network protocol associated with a first network (limitation 7b), and which was stored in the storage resource (limitation 7e). That information has to then be shared "utilizing at least one message format corresponding to a second network protocol associated with a second network which is different from the first network protocol." Exh. 2006, ¶111.

As shown in Petitioner's above annotated figure, Petitioner merely inserts a label of what it argues to two alleged protocols, but does not or explain why they are different. Nothing in Miesterfeld states that VDB and ITS are different protocols, in part because VDB is not a recognized protocol. Given that Petitioner has not made any argument or provided any explanation as to why VDB and ITS are different protocols, there is simply nothing to address.

Moreover, if Miesterfeld had intended to communicate that VDB and ITS were different protocols, Miesterfeld would have to have disclosed a method of converting data from one protocol to another, but Miesterfeld did not do that. This demonstrates that Miesterfeld did not disclose two different protocols.

There is an absence of any discussion of conversion in Miesterfeld would also make the reference non-enabling, because conversion of protocols is not a trivial matter, and can only be effected if there is a description of how that can be done. Exh. 2006, ¶114.

Given the lack of explanation of VDB and the lack of any discussion of conversion in Miesterfeld, and the lack of any other cited art discussing conversion from one protocol to another, much less in conjunction with the present invention, a skilled artisan in December 2003 would have known who to deliver data to a storage resource and store the data in a way that the data could be shared with a second network utilizing a different protocol. Exh. 2006, ¶115.

Limitation 7i,j

Limitations 7i,j require "a first interface portion for interfacing with <u>the first network</u>, the first interface portion including a first interface-related first layer part for receiving first interface-related first layer messages and a first interface-related second layer part, the first interface-related first layer messages being processed after which first interface-related second layer messages are provided."

It is unlikely that Miesterfeld discloses the entirety of limitations 7i,j. However, Miesterfeld clearly does not disclose limitations 7 l-m.

Limitation 7l,m,n

Limitations 7l,m,n require "a second interface portion for interfacing with the second network, the second interface portion including a second interface-related first layer part for receiving second interface-related first layer messages and a second interface-related second layer part, the second interface-related first layer messages being processed after which second interface-related second layer messages are provided, where the second network is different from the first network and is at least one of the Controller Area Network, the Flexray network, or the Local Interconnect Network."

Miesterfeld does not disclose these limitations.

Petitioner argues that ITS is CAN, because of Miesterfeld's reference to IDB. As noted above, the "IDB" bus as disclosed in Miesterfeld is not a CAN bus. Petitioner is rewriting the prior art. The term "IDB" meant and continues to mean Standard J2355_199710, which was published October 1, 1997, and was the only IDB standard when Miesterfeld was published. Moreover, Standard J2355_199710 is not even compatible with CAN. Therefore, there is no possibility that the "IDB" disclosure could be changed to include CAN. A skilled artisan would not understand that Miesterfeld was referring to "IDB-C," which is a very different specification than "IDB," and which was not even published until November 27, 2001 -- long after Miesterfeld was published. In short, Miesterfeld never refers to

CAN directly or indirectly, and a skilled artisan would not consider that Miesterfeld discloses combining the invention with the "IDB-C" standard merely because the standard includes the "IDB" in its title. Therefore, Miesterfeld does not disclose to a skilled artisan at the time of the invention of the '705 Patent a system which includes a CAN bus. Exh. 2006, ¶120.

Further, Petitioner's contention that Miesterfeld's statement that the VDB bus follows the "J1850 configuration as prescribed by the Society of Automotive Engineers (SAE) or any other industry standard as may be required," would render obvious the LIN network is wrong. Specifically, Petitioner argues that LIN "was well-known to work well in applications with the CAN network." However, given that Miesterfeld does not disclose a CAN network, Petitioner's argument has no foundation. It is unnecessary to consider Petitioner's citation to Wense, because Petitioner relies on Wense with the assumption that Miesterfeld discloses CAN. Again, given that the assumption is erroneous, there is no basis to apply Wense. Exh. 2006, ¶121.

B. Claim 8

Claim 8 is dependent from claim 7, and requires in addition to the elements of claim 7 that "the storage resource includes a bulletin board." Petitioner identifies the description of a bulletin board in the '705 Patent: "in the context of the present description . . . any data base that enables users to send and/or read

electronic messages, file, and/or other data that are of general interest and/or addressed to no particular person/process." Exh. 1001, 5:10-14; *see* Pet. at 77-78. Petitioner then asserts that Miesterfeld discloses a "shared memory" referred to as "mailboxes." Pet. at 78.

Miesterfeld's shared memory "mailboxes" are distinguishable from the bulletin board required by Claim 8, because the "mailboxes" are incapable of accommodating "electronic messages, file, and/or other data that are of general interest and/or addressed to no particular person/process." Miesterfeld's "mailboxes" store exclusively predetermined content and lack the generality and flexibility of a bulletin board:

> Preferably, **memory 30 is allocated in a predetermined fashion so that predetermined vehicle perameters** [sic] **occupy predetermined memory locations, referred to as mailboxes.** Each peramiter *[sic]* can be assigned a mailbox, shown as PAR1 and PAR2, . . . , PARN. Similarly, predetermined sections of the memory can be allocated as a mailbox for storing predetermined commands in predetermined memory locations, shown as COM1, COM2, through COMN. In this manner, **each parameter and command may be assigned to a certain mailbox, and only the specified data or command may be placed in that mailbox.**

Exh. 1009, 3:25-36 (emphasis added); *see also* Fig. 1. This does not disclose a "bulletin board" as defined by the specification of the '705 Patent. Exh. 2006, ¶123.

For this reason and all the reasons set forth above with respect to Claim 7, the combination of Miesterfeld, Stewart, and Wense does not disclose every element of

Claim 8, nor would a person of ordinary skill have been motivated to combine them to arrive at the invention of the '705 Patent. Exh. 2006, ¶124.

C. Claim 10

Claim 10 is dependent from claim 7, and requires in addition to the elements of claim 7 that the "computer program product is operable such that at least one of the different processes process the information in a manner that is isolated from temporal characteristics associated with at least one of a plurality of heterogeneous networks." Petitioner first points to a description of an application process' use of a bulletin board retrieve mechanism in the '705 Patent, which "decouples" the application process from the temporal behavior of the input/output variables. Pet. at 79; Exh. 1001,8:64-9:2 and Fig. 12. Petitioner then incorrectly alleges that "Miesterfeld discloses the very same system." Pet. at 79. Petitioner is relying in part on its argument regarding a "shared memory" made with respect to Claim 9 which, as already discussed, is unavailing.

Petitioner does not address or point to any "processing" in the context of the claim language at all. Petitioner ignores the antecedent basis of the "different processes" of Claim 10, which lie in claim elements 7j and 7m. The "processing" in the context of the claim is the processing of the "first interface-related first layer messages" and the "second interface-related first layer messages." Petitioner's discussion of the VDB bus writing information to mailboxes and queueing VDB

messages for transmission reveals absolutely nothing about temporal isolation of message processing. Pet. at 79-80.

For this reason and all the reasons set forth above with respect to Claim 7, the combination of Miesterfeld, Stewart, and Wense does not disclose every element of Claim 10, nor would a person of ordinary skill have been motivated to combine them to arrive at the invention of the '705 Patent. Exh. 2006, ¶127.

D. Claim 11

Claim 11 is dependent from claim 7, and requires in addition to the elements of claim 7 that "the computer program product is operable such that the information is shared with an operating system." Petitioner alleges this limitation is expressly disclosed by Stewart, in the form of the "Chimera II Real-time Operating system." Pet. at 80.

Petitioner's argument–that one of ordinary skill "would have been motivated to combine the real-time operating system of Stewart with the Miesterfeld's system"–overlooks the fact that Stewart's Chimera II operating system was confined to a single bus. *See* Exh. 1007 at §IV, p.329. Adaptation of a real-time operating system to a multiple-bus apparatus would have required undue experimentation and would not, contrary to Petitioner's assertion, have had a reasonable expectation of success. Exh. 2006, ¶129.

For this reason and all the reasons set forth above with respect to Claim 7, the combination of Miesterfeld, Stewart, and Wense does not disclose every element of Claim 11, nor would a person of ordinary skill have been motivated to combine them to arrive at the invention of the '705 Patent. Exh. 2006, ¶130.

E. Claim 18

Claim 18 is dependent from claim 7, and requires in addition to the elements of claim 7 that "the computer program product is operable such that multiple modes of operation are enabled, wherein at least one of the modes includes a diagnostic mode." Petitioner cites only to comments in Miesterfeld suggesting that "third party manufacturers may provide . . . diagnostic systems" and that a goal of the invention was to "provide a gateway for enabling data exchange between vehicle systems and third party systems which may require such data." Pet. at 85.

"Diagnostic mode" should be understood as "an alternate mode of operation, distinct from normal operations, that still allows inspection of the system while it is running." *See* § 0, *supra*. Petitioner overlooks the extensive description of alternative operating modes in the specification. *See id*. The purpose of these modes is to "provide for a guaranteed deterministic behavior of the system." Exh. 1001, 11:52-53. If providing a diagnostic gateway was a goal of the Miesterfeld invention, no figure, diagram or text in the specification reveals it. Miesterfeld does not disclose a "diagnostic mode," or for that matter ***any*** alternative mode of

operation as required by the language of Claim 18. Petitioner's statement that a person of ordinary skill would understand that Miesterfeld discloses such a mode is simply speculation. Exh. 2006, ¶132.

For these reasons and all the reasons set forth above with respect to Claim 7, the combination of Miesterfeld, Stewart, and Wense does not disclose every element of Claim 18, nor would a person of ordinary skill have been motivated to combine them to arrive at the invention of the '705 Patent. Exh. 2006, ¶133.

X. CONDITIONAL CLAIM ELEMENTS SHOULD BE GIVEN PATENTABLE WEIGHT

The Board has raised the following issue *sua sponte* in their decision to institute:

> We note several of the limitations of method claim 47 may be conditional and may not be entitled to patentable weight because the phrase "in the event" implies the subject matter that follows is conditional. *See Ex parte Schulhauser*, Appeal 2013-007847, slip op. 6–10 (PTAB April 28, 2016) (precedential) (A "conditional limitation in a method claim [is] afford[ed] . . . no patentable weight.").

Institution Decision at 16, n. 6. Without deciding whether the limitations reciting "in the event" were not entitled to patentable weight, the Board indicated that the parties would have an opportunity to address the conditional nature of the limitations during the trial. *Id*.

Preliminarily, the challenge to patentable weight of a so-called "conditional limitation" is not supported by any provision of the federal patent code or any decision of any governing authority. The challenge appears to be inconsistent with established law. Thus, the Federal Circuit has stated that functional limitations in both method and system claims must be given effect. *MasterMine Software, Inc. v. Microsoft Corp*., 874 F.3d 1307, 1316 (Fed. Cir. 2017) ("Because the claims merely use permissible functional language to describe the capabilities of the claimed system, it is clear that infringement occurs when one makes, uses, offers to sell, or sells the claimed system. Accordingly, these [method and system] claims inform those skilled in the art about the scope of the invention with reasonable certainty")

Indeed, even negative functional limitations are given patentable weight. *LifeNet Health v. LifeCell Corp*., 837 F.3d 1316, 1326 (Fed. Cir. 2016) ("Functional limitations recited in the negative may describe a capability or structural element") [citing *Amgen Inc. v. Hoechst Marion Roussel, Inc*., 314 F.3d 1313, 1329 (Fed. Cir. 2003) (holding that 'non-naturally occurring' and 'not isolated' were structural elements defining the source of the claimed material, rather than steps for obtaining it)].

However, it is clear from at least one previous decision, *Ex parte Hehenberger*, Appeal No. 2015-007421 (Jan. 31, 2016), that the there are exceptions to the supposed rule from *Ex parte Schulhauser* that the mere existence of a condition results in no patentable weight being given to the conditional limitation. A clue is provided by the Board in *Schulhauser* when it distinguishes system claims from method claims:

> The broadest reasonable interpretation of a system claim having structure that performs a function, which only needs to occur if a condition precedent is met, still requires structure for performing the function should the condition occur. This interpretation of the system claim differs from the method claim ***because the structure*** (i.e., a processor programmed to perform an algorithm for carrying out the recited function should the recited condition be met) ***is present in the system regardless of whether the condition is met and the function is actually performed***.

Schulhauser at 14 (emphasis added). Thus, the test demanded by *Schulhauser* is not simply whether conditional language is present, but rather whether the method claim as a whole provides one or more structures (such as a processor programmed to carry out the recited function) that would be "present in the system regardless of whether the condition is met and the function is actually performed."

In the present case, the method explicitly requires several structures, including "an electronic control unit with a plurality of interface portions," "a first network," and "a second network." One skilled in the art would recognize that the

method also implicitly requires several other structures, including at least one processor in the electronic control unit (ECU) capable of "in real-time, sharing the information," and processing "the first interface-related first layer messages." One skilled in the art would recognize that, unlike the method in *Schulhauser*, the functionality of the structures explicitly or implicitly identified in the present method claims, including the ability to share information in real-time, requires structure (i.e., a processor) to exist and be programmed with the functionality to perform at least the steps of "causing a request," "causing an error notification to be sent," and "causing storage of the information" even if the conditions are not present.

Therefore, the claimed limitations should be given patentable weight.

XI. THE IPR PROCESS IS UNCONSTITUTIONAL

Finally, this IPR should be terminated and the petition dismissed because the IPR system is unconstitutional for at least two reasons. First, it vests judicial power outside the judicial branch in non-Article III courts and thus violates Article III of the Constitution. Second, it gives non-Article III administrative bodies the authority to revoke patent rights without a jury trial in violation of the Seventh Amendment to the Constitution. The Federal Circuit held to the contrary in *Oil States Energy Svcs., LLC v. Greene's Energy Group, LLC*, No. 2015-1855 (Fed. Cir. 2015), but the Supreme Court granted certiorari and heard the case in its

current term. Petition granted, *Oil States Energy Svcs., LLC v. Greene's Energy Group, LLC*, No. 16-712 (U.S. June 12, 2017). Accordingly, Patent Owner preserves this argument for further review.

XII. CONCLUSION

For at least all the foregoing reasons, Patent Owner respectfully requests that Petitioner's challenge of Claims of the '705 Patent be denied in its entirety.

Dated: September 18, 2017

Respectfully Submitted,

/Thomas H. Kramer/
Thomas H. Kramer
Reg. No. 71,042
901 N. Market Street, Suite 1000
Wilmington, Delaware 19801
(302) 778-4000
tkramer@oeblegal.com

CERTIFICATE OF COMPLIANCE

This Paper contains 12,767 words, excluding the portions exempted by 37 C.F.R. § 42.24(a)(1). Accordingly, this Paper complies with the requirements of 37 C.F.R. § 42.24(b)(1).

Dated: March 12, 2018

Respectfully Submitted,

/Thomas H. Kramer/

Thomas H. Kramer
Reg. No. 71,042
901 N. Market Street, Suite 1000
Wilmington, Delaware 19801
(302) 778-4000
tkramer@oeblegal.com

CERTIFICATE OF SERVICE

The undersigned hereby certifies that the foregoing was served by filing this document through the Patent Trial and Appeal Board End to End (PTAB E2E) as well as providing a courtesy copy via email to the Petitioner's lead and backup counsel at the following addresses:

Lead Counsel
James M. Glass
Reg. No. 46,729
jimglass@quinnemanuel.com
P: (212) 849-7000 / F: (212) 849-7100
Quinn Emanuel Urquhart & Sullivan, LLP
51 Madison Ave, 22nd Floor
New York, NY 10010

Backup Counsel
Brett N. Watkins
Reg. No. 60,458
brettwatkins@quinnemanuel.com
P: (202) 538-8000 / F: (202) 538-8100
Quinn Emanuel Urquhart & Sullivan, LLP
711 Louisiana St., Suite 500
Houston, Texas 77002

Backup Counsel
Richard A. Lowry
Reg. No. 70306
richardlowry@quinnemanuel.com
Quinn Emanuel Urquhart & Sullivan, LLP
1300 I Street, NW, Suite 900
Washington, D.C. 20005

Dated: March 12, 2018

Respectfully Submitted,

/Thomas H. Kramer/
Thomas H. Kramer
Reg. No. 71,042
901 N. Market Street, Suite 1000
Wilmington, Delaware 19801
(302) 778-4000
tkramer@oeblegal.com