US006434459B2

(12) **United States Patent**
Wong et al.

(10) **Patent No.: US 6,434,459 B2**
(45) **Date of Patent: *Aug. 13, 2002**

(54) **AUTOMOBILE INFORMATION SYSTEM**

(75) Inventors: **William S. Wong**, Redmond; **Lawrence W. Lee**, Bellevue, both of WA (US)

(73) Assignee: **Microsoft Corporation**, Redmond, WA (US)

(*) Notice: This patent issued on a continued prosecution application filed under 37 CFR 1.53(d), and is subject to the twenty year patent term provisions of 35 U.S.C. 154(a)(2).

Subject to any disclaimer, the term of this patent is extended or adjusted under 35 U.S.C. 154(b) by 0 days.

(21) Appl. No.: **09/337,693**

(22) Filed: **Jun. 21, 1999**

Related U.S. Application Data

(63) Continuation of application No. 09/337,693, filed on Jun. 21, 1999, and a continuation-in-part of application No. 08/771,343, filed on Dec. 16, 1996, now Pat. No. 5,957,985.
(60) Provisional application No. 60/095,504, filed on Aug. 5, 1998.

(51) **Int. Cl.**[7] **G06F 7/00**; G05B 15/02
(52) **U.S. Cl.** **701/36**; 701/48
(58) **Field of Search** 701/36, 29, 33, 701/48; 710/110, 126, 129, 243; 709/107, 208, 250, 253, 302

(56) **References Cited**

U.S. PATENT DOCUMENTS

4,937,811 A * 6/1990 Harris 370/5
5,091,856 A * 2/1992 Hasegawa et al. 701/36
5,224,124 A * 6/1993 Hamano et al. 375/37
5,351,041 A * 9/1994 Ikata et al. 340/825.24
5,369,581 A * 11/1994 Ohsuga et al. 701/48
5,369,584 A * 11/1994 Kajiwara 701/36
5,408,471 A * 4/1995 Nobutoki et al. 370/85.9
5,438,506 A * 8/1995 Oho et al. 700/9
5,856,976 A * 1/1999 Hirano 370/401

* cited by examiner

Primary Examiner—Tan Nguyen
(74) *Attorney, Agent, or Firm*—Lee & Hayes, PLLC

(57) **ABSTRACT**

An automobile information system facilitates communication within clusters of components and among various clusters. Each cluster has logically related automobile components (e.g., environment control components, entertainment components, etc.) interconnected to a cluster controller connected via a data communications bus. The cluster controller is responsible with disseminating information received from an external source and exchanging information between two or more components. The cluster controller is implemented as a general-purpose computing device having an open platform operating system, which supports multiple applications and provides interfaces to the components. The cluster controllers are interconnected via another data communications bus to enable information flow between clusters. In this manner, any component in one cluster can share information with any component in another cluster without need for dedicated wiring or specially written code.

19 Claims, 4 Drawing Sheets

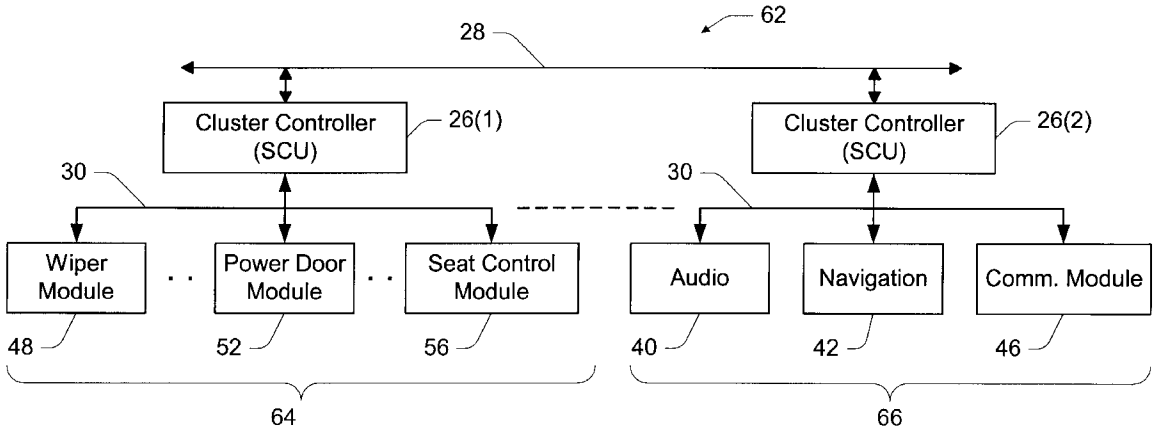

BMW EXHIBIT 1012

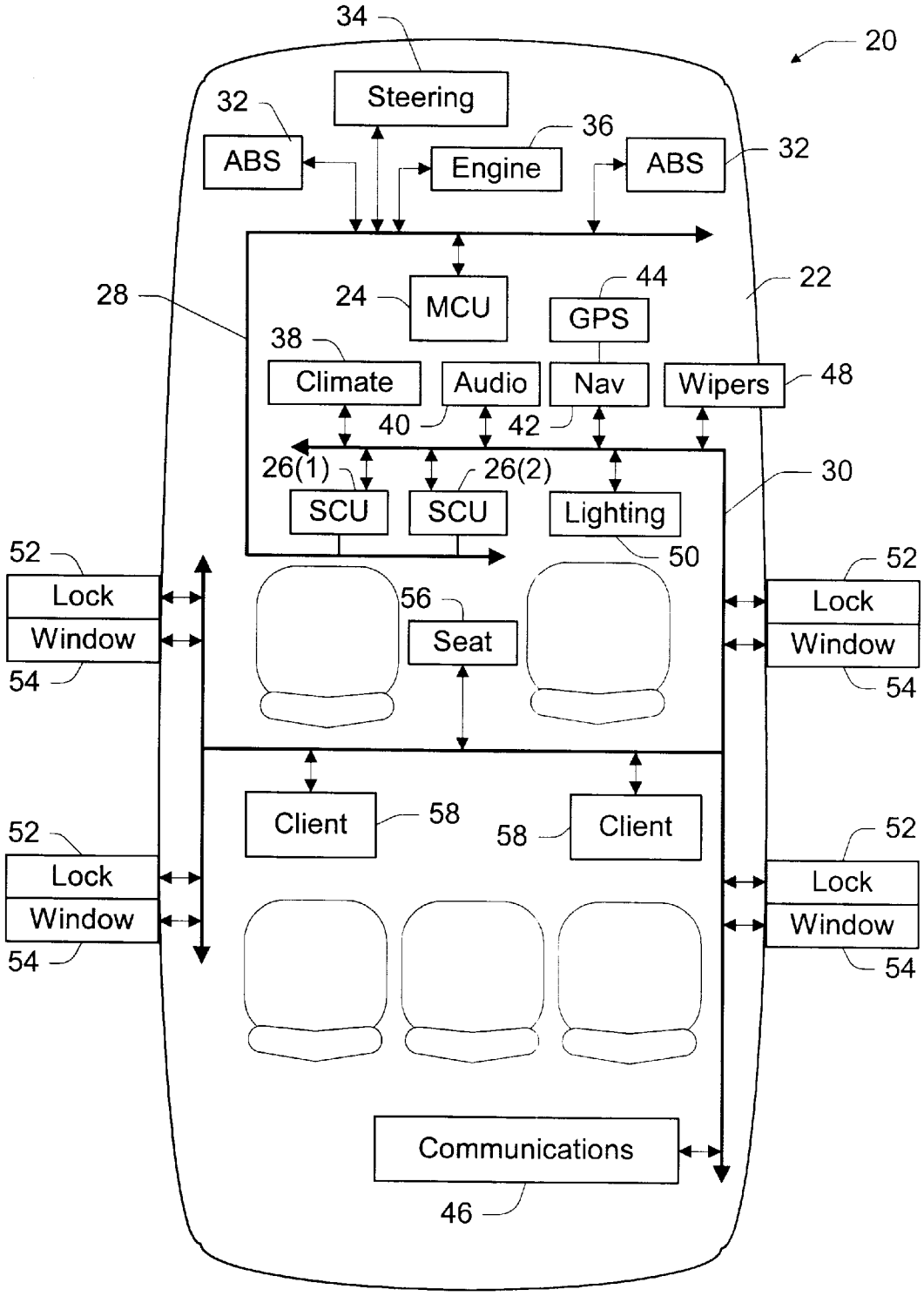
34
20
Steering
32
36
ABS
Engine
ABS
32
28
24
MCU
44
GPS
22
38
Climate
Audio
Nav
Wipers
48
40
42
26(1)
26(2)
30
SCU
SCU
Lighting
50
52
Lock
Window
54
56
Seat
52
Lock
Window
54
Client
58
58
Client
52
Lock
Window
54
52
Lock
Window
54
Communications
46

Fig. 1

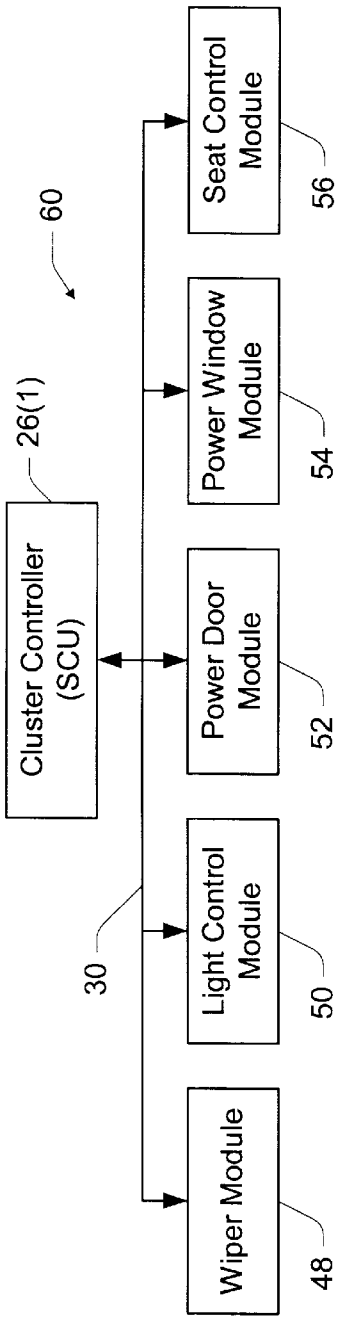
60
26(1)
Cluster Controller (SCU)
30
Wiper Module
48
Light Control Module
50
Power Door Module
52
Power Window Module
54
Seat Control Module
56

Fig. 2

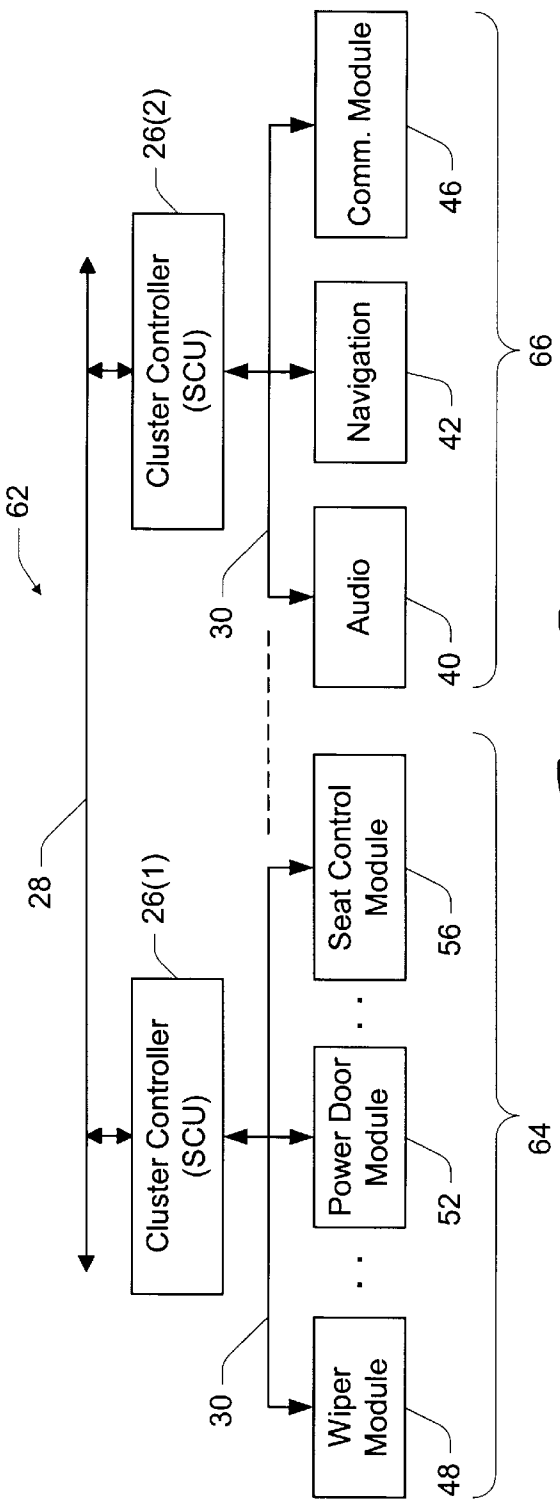
62
28
26(1)
Cluster Controller (SCU)
30
Wiper Module
48
Power Door Module
52
Seat Control Module
56
64
26(2)
Cluster Controller (SCU)
30
Audio
40
Navigation
42
Comm. Module
46
66

Fig. 3

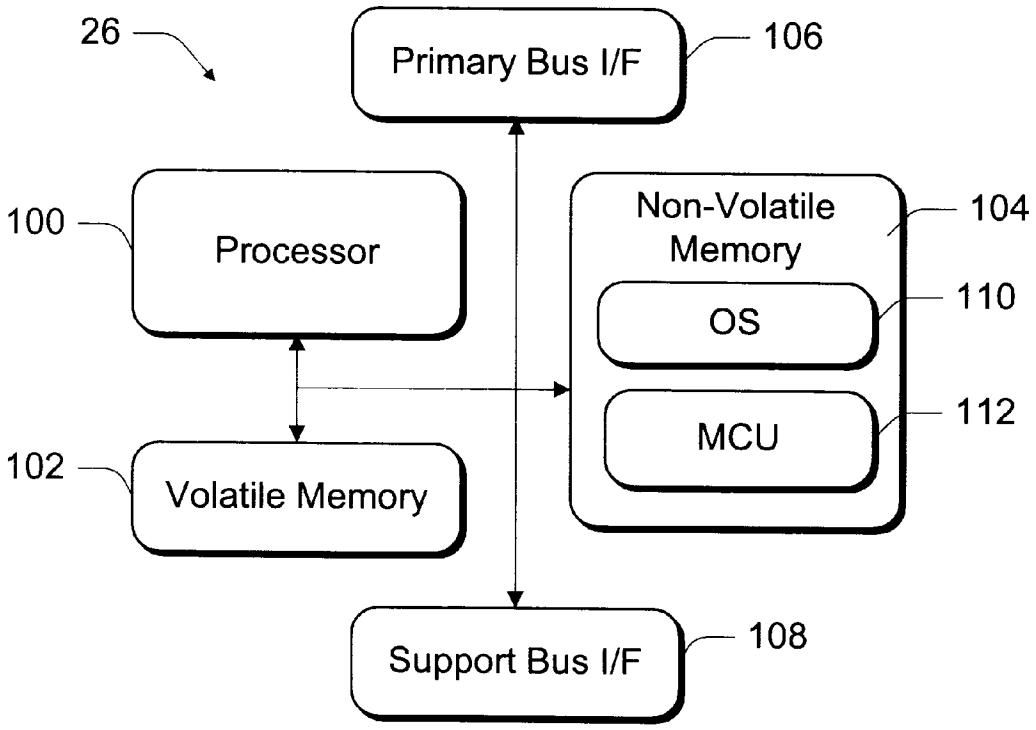
26
Primary Bus I/F
106
100
Processor
Non-Volatile Memory
104
OS
110
MCU
112
102
Volatile Memory
Support Bus I/F
108

Fig. 4

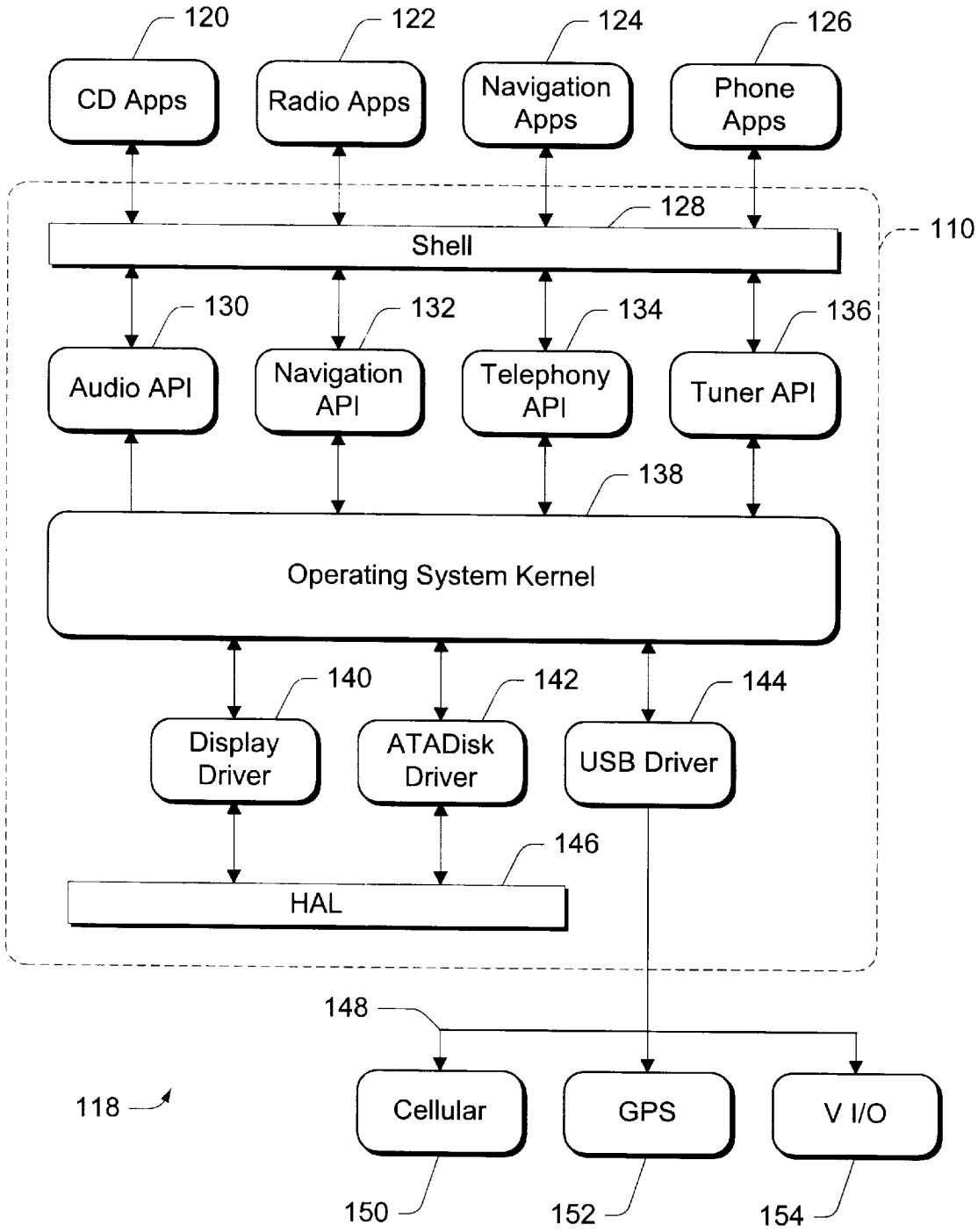
120
122
124
126
CD Apps
Radio Apps
Navigation Apps
Phone Apps
128
110
Shell
130
132
134
136
Audio API
Navigation API
Telephony API
Tuner API
138
Operating System Kernel
140
142
144
Display Driver
ATADisk Driver
USB Driver
146
HAL
148
118
Cellular
GPS
V I/O
150
152
154

Fig. 5

AUTOMOBILE INFORMATION SYSTEM

RELATED APPLICATIONS

This is a continuation of U.S. patent application Ser. No. 09/337,693, filed Jun. 21, 1999.

U.S. patent application Ser. No. 09/337,693 is a continuation of U.S. Provisional Patent Application No. 60/095,504, filed Aug. 5, 1998 and a continuation-in-part of U.S. patent application Ser. No. 08/771,343, filed Dec. 16, 1996, now U.S. Pat. No. 5,957,985, which issued Sep. 28, 1999. Both of these applications are incorporated by reference.

TECHNICAL FIELD

This invention relates to information systems for automobiles.

BACKGROUND

In traditional automotive electronic systems, dedicated components are employed to control specific functions in the vehicle. These dedicated components are typically independent of one another, each with its own operator interface. For instance, most modern automobiles have an electronic engine control system, a computerized antilock braking system (ABS), a vehicle safety system, a lighting control system, a climate control subsystem, and a sound system. Most vehicles also have power door locks, power windows, and power seating for the operator's comfort.

Some automobile models are equipped with a navigation system that employs a global positioning system (GPS) receiver to receive positioning signals from a satellite network. The navigation system computes coordinates that locate the vehicle over the surface of the earth with regard to longitude, latitude, and altitude. Cellular communication systems have also been introduced into automobiles to enable the driver or occupant to transact telephone calls from their vehicle. Most late model automobiles are also constructed with a diagnostic system that analyzes the performance of the automobile engine, air and heating system, and other components (1996 or later for OBD II, 1993 or later for OBD I).

While these various electronic control units have proven useful, there is a drawback in that all of them are entirely separate and independent from one another. Generally, different manufacturers supply these subsystems. These disparate components often employ proprietary, dedicated processors or ASICs (application specific integrated circuits) that have different system architectures and execute incompatible proprietary software. The components have limited or no communications with one another.

Yet, today's automotive electronic systems increasingly encompass a broader range of functionality, such as task management, resource management, communication with other control units or systems, time-critical monitoring and control of equipment. This requires increased integration of components into networks of distributed and multiplexed electronic system, as well as interfaces for s communication between the control units and for communication with the operator. The motivations for this increased integration of the automotive electronic system are many, including:

Cost reduction of existing functions;

Cost effective improvement of existing functions;

Cost effective enabling of new functions;

Reduction of wiring weight;

Simplify addition of new functions via software upgrade;

Optimization of electronic and mechanical integration;

Increase of system performance, intelligence, and coherent; and

Increase data communications with external systems/infrastructure.

Some strides have been made to integrate the components. Typically, the proposals call for each of the distributed components to be connected to a data bus, such as a CAN (Controller Area Network) protocol bus. Designers have theorized different multiplexing protocols and token passing protocols to facilitate communication over the bus. For more information on these proposals, the reader is directed to the following articles which appear in a publication from the Society of Automotive Engineers (SAE): Inoue et al., "Multiplex Systems for Automotive Integrated Control," *Multiplex Technology Applications in Vehicle Electrical Systems*, SP-954, No. 930002, copyright 1993; Azuma et al., "Development of a Class C Multiplex Control IC," *Multiplex Technology Applications in Vehicle Electrical Systems*, SP-954, No. 930003, copyright 1993; Mathony et al. "Network Architecture for CAN," *Multiplex Technology Applications in Vehicle Electrical Systems*, SP-954, No. 930004, copyright 1993; Szydolowski, "A Gateway for CAN Specification 2.0 Non-Passive Devices," *Multiplex Technology Applications in Vehicle Electrical Systems*, SP-954, No. 930005, copyright 1993; Neumann et al., "Open Systems and Interfaces for Distributed Electronics in Cars (OSEK)," *Automotive Multiplexing Technology*, SP-1070, No. 950291, copyright 1995; and Emaus, "Aspects and Issues of Multiple Vehicle Networks," *Automotive Multiplexing Technology*, SP-1070, No. 950293, copyright 1995.

While there has been some progress at interconnecting electronic components in a distributed system via a communication link, there is no commonly accepted standard for the main vehicle system bus and bus interface. Achieving the above objectives entails a system design that is flexible and scaleable, with the capability to manage complex functions.

SUMMARY

This invention concerns an automobile information system that facilitates communication within clusters of components and among various clusters. Each cluster has a controller that provides a platform for supporting many diverse components.

In one implementation, various automobile components are grouped into logical clusters. For example, components used to control an operator's environment in the automobile (e.g., climate control, lighting, seat position, window placement, door locks, etc.) might form a first cluster. Another cluster might contain components related to entertainment and communication functions (e.g., audio, navigation, cellular communications, etc.).

Each cluster has its own cluster controller to manage information flow among the cluster's components. A data communications bus interconnects the cluster controller and components. The cluster controller is responsible with disseminating information received from external sources to the various components with interest in the information as well as exchanging information between two or more components within the cluster.

Each cluster controller is implemented, for example, as a general-purpose computing device having an open platform operating system. The operating system offers a platform with APIs (application program interfaces) and DDIs (device driver interfaces) that allow developers to interface different peripheral components with a common controller.

The cluster controller supports multiple applications and provides interfaces for those programs to the hardware peripheral devices. The cluster controllers are interconnected via another data communications bus to enable information flow between clusters. In this manner, any component in one cluster can share information with any component in another cluster without need for dedicated wiring or specially written code.

BRIEF DESCRIPTION OF THE DRAWINGS

The same reference numerals are used throughout the drawings to reference like components and features.

FIG. **1** is a diagrammatic illustration of a vehicle information and control system implemented in an automobile.

FIG. **2** is a block diagram of a cluster having a cluster controller to manage information flow among multiple components.

FIG. **3** is a block diagram of two clusters, with the cluster controllers interconnected to one another.

FIG. **4** is a block diagram of a cluster controller.

FIG. **5** is a block diagram of software architecture employed in the cluster controller.

DETAILED DESCRIPTION

General System

FIG. **1** shows vehicle information system **20** constructed in an automobile **22**. The automobile control system **20** has a master control unit (MCU) **24** and one or more secondary control unit (SCU) **26(1)** and **26(2)**. A dual bus structure having a primary data communications bus **28** and a secondary support bus **30** provide an infrastructure for data-communications in-the-control- system **20**. The s primary bus **28** may be implemented using any vehicle bus design currently employed or contemplated by automobile manufactures, such as CAN, ABUS, VAN, J1850, K-BUS, P-BUS, I-BUS, USB, P1394, and so forth. The master control unit **24** can be configured as master of the primary bus **28**. The support bus **30** may be implemented as any standard computer data bus, such as PCI, USB, P1394, and the like. One or both secondary control units **26(1)** and **26(2)** can be configured as master of the support bus **30** and as controller of one or more components coupled to the support bus **30**.

The master control unit **24** and the secondary control unit(s) **26** are interconnected through the primary vehicle bus **28**. In addition, various electronic automobile components are connected to the master control unit **24** via the primary bus **28**. In this illustration, the electronic components include an antilock braking system (ABS) **32**, an electronic steering system **34**, and an engine control system **36**. However, other components may likewise be connected to the primary vehicle bus **28**, such as a security/alarm system, a diagnostic system, a lighting control system, a fuel injection system, an automatic transmission system, and so forth. In addition, the electronic components shown in FIG. **1** are intelligent components in that they each have their own local controller, typically embodied as a microprocessor. The automobile might further include non-intelligent electronic components that do not have local processing capabilities.

FIG. **1** shows a number of devices connected to the support bus **30**. These devices include a climate control system **38**, an audio system **40**, a navigation system **42** with global positioning system (GPS) antenna **44**, and a cellular communications system **46**. The support bus **30** is also coupled to a wipers module **48**, lighting control **50**, power door locks **52**, power window controls **54**, and seat control **56**. An SCU **26** may also be configured as a server to serve to multiple clients **58**. The clients **58** can be implemented, for example, as small hand held or laptop game computers having visual display screens and audio sound cards to provide multimedia entertainment. The SCU **26** serves in-car entertainment in the form of movies and games to the clients **58** for the passengers' enjoyment.

The control units **24** and **26** can be arranged in two different architectures: (1) master/slave architecture; and (2) cluster architecture. In a master/slave architecture, the master control unit **24** acts as the master of the primary vehicle bus **28** and all electronic components **32–36**, as well as the secondary control unit(s) **26**, act as slaves to master control unit **24**. The master control unit **24** manages data flow among the electronic components **32–36** and facilitates resource and information sharing. In addition, the master control unit **24** provides backup for the intelligent electronic components in the event that any of them fail, and also performs data processing and control functions for non-intelligent electronic components. This architecture is described in detail in U.S. patent application Ser. No. 08/771,343, entitled "Fault-Resilient Automobile Control System", which was filed Dec. 16, 1996, and issued as U.S. Pat. No. 5,957,985 on Sep. 28, 1999. This patent is assigned to Microsoft Corporation and is incorporated by reference.

Cluster Architecture

In a cluster architecture, the control units **24** and **26** (or the two secondary control units **26(1)** and **26(2)**) act as cluster controllers to control groups of related components. For example, a cluster controller might provide control of lights, climate control system (heating, ventilation and air conditioning), windshield wipers, seat adjustments. Another cluster controller may provide more advanced features, such as access to vehicle diagnostic information, intelligent door lock, remote alarm/unlocking, and configurable instrument panel and head-up display. With a cluster controller, the functionality of the core subsystems can be greatly enhanced by sharing hardware resources and information among the components and subsystems. It also provides maximum flexibility and allows additional functionality to be added as new components to the system without having to redesign the entire system.

FIG. **2** shows an exemplary cluster architecture **60** in which one of the secondary control units **26(1)** is configured as a cluster controller for the wipers module **48**, lighting control module **50**, door lock modules **52**, power window control modules **54**, and a seat control module **56**. The cluster controller **26(1)** facilitates information sharing among the cluster of components over bus **30**. For example, suppose the vehicle operator sets the vehicle alarm system when exiting the vehicle. The vehicle alarm system informs the cluster controller **26** that the alarm is now activated. When the cluster controller **26** receives this notification, this single piece of information is shared among the components so that those components with interest may take some sort of action. Here, the lighting control module **50** may blink the interior lights to provide feedback to the operator that the alarm has been set. Concurrently, the door lock modules **52** and power window controls **54** are toggled to a locked state to prevent unwanted entry.

With the cluster architecture, multiple clusters can be interconnected via one or more data buses to communicate with each other. Communication between clusters enables increased functionality of the system and helps reduce cost, simplify information communication, and optimize functions.

In traditional prior art systems, dedicated wiring is required for one component to communicate with another component. Consider the example of adding a feature of remote locking and unlocking of the vehicle doors via telephone or email. To perform this task, the traditional solution is to add wiring between the door lock control module **52** and communication module **46** to form a dedicated communication link. Then, special software is written to enable the communication module **46** to receive the instruction to lock the door and to send that instruction to the door look control module **52**. Moreover, one or both of the modules needs to be adapted to communicate according to a specific protocol employed by the other.

In the clustering architecture, however, the communication link between the cluster controllers handles the communication between various components without need of special wiring or programming. FIG. **3** shows a cluster architecture **62** in which two clusters **64** and **66** are interfaced together. The first cluster **64** is the same as that shown in FIG. **2**, with cluster controller **26(1)** controlling the components related to the vehicle operating environment (e.g., wipers **48**, door locks **52** and seat control module **56**). The first cluster controller **26(1)** interfaces with these components via bus **30**.

A second cluster controller **26(2)** controls the second cluster **66**, which groups communication and entertainment functions. In this example, the second cluster controller **26(2)** facilitates communication and information flow among the audio module **40**, the navigation component **42**, and cellular communications module **46**. The second cluster also utilizes the bus **30**, although a separate bus may be used.

The first and second cluster controllers **26(1)** and **26(2)** are connected via bus **28**. The cluster controllers **26(1)** and **26(2)** facilitate communication flow between any component in the first cluster **64** and any component in the second cluster **66** over the second bus **28**. The two cluster controllers **26(1)** and **26(2)** can utilize a common communications protocol to communicate over bus **28**, thereby eliminating the need for one peripheral device to be specially programmed to communicate with another peripheral device. Furthermore, no dedicated wiring is required.

Consider again the example of adding a feature of remote locking and unlocking of the vehicle doors via telephone or email. Here, an operator can send a command to lock the vehicle doors using email or a cell phone and the command is received at the cellular communications module **46** (or its cluster controller **26(2)** and passed to the communications module **46**). The communications module **46** then transmits a signal destined to the door module **52** over bus **30** to its cluster controller **26(2)**, which in turn transmits the signal over bus **28** to cluster controller **26(1)**. The signal is then delivered over bus **30** to the door module **52**.

It is noted that although the implementation illustrated in FIG. **3** utilizes the same secondary bus **30** to facilitate information flow within the clusters, separate and distinct buses may be employed within the various clusters. Furthermore, since the clusters are implemented using a single platform (described below in more detail), additional software modules can be easily added to the system to perform the desired function, i.e., locking or unlocking the vehicle via phone or email.

Cluster Controller

FIG. **4** shows an exemplary implementation of a cluster controller. In this illustration, the cluster controller is implemented as a secondary control unit **26**, which is embodied as a general-purpose computer with an open platform operating system capable of supporting multiple applications. The master control unit **24** can be configured in a very similar manner.

The cluster controller **26** has a processor **100**, volatile memory **102** (e.g., RAM), and non-volatile memory **104** (e.g., ROM, Flash, hard disk, etc.). The cluster controller **26** has a primary bus interface **106** to provide access to the primary vehicle bus **28** and a support bus interface **108** to provide access to the support bus **30**.

The cluster controller **26** runs an open platform operating system **110** that supports multiple applications. With an open platform operating system, the cluster controller **26** can support a wide variety of software applications and hardware peripherals on the support bus **30**. The operating system is preferably a real-time, multitasking operating system that is capable of supporting "plug-and-play" system configuration and providing high stability, security, and efficiency. One preferred operating system is a "Windows" brand operating system sold by Microsoft Corporation, such as "Windows CE", "Windows NT", or other derivative versions of "Windows". A multitasking operating system allows simultaneous execution of multiple applications.

The cluster controller **26** might also include at least one storage drive—such as a CD ROM drive, PC Card drive, or a floppy disk drive—which permits use of portable storage media. A CD ROM drive enables application-related CDs, as well as musical, video, game, or other types of entertainment CDs. The cluster controller **26** is constructed and sized to mount in the dashboard of the vehicle. A detailed explanation of one suitable construction of a cluster controller is described in U.S. Pat. No. 5,794,164, entitled "Vehicle Computer System," which issued Aug. 11, 1998, in the names of Richard D. Beckert, Mark M. Moeller, and William Wong. This application is assigned to Microsoft Corporation and is hereby incorporated by reference.

The SCU **26** maintains an up-to-date copy of executable code **112** run by the MCU **24** to manage data flow among the components. The MCU code **112** is downloaded to the SCU **26** during initialization and stored in the non-volatile memory **104**. In the event that the MCU **24** fails, the secondary control unit **26** executes the MCU code **112** to assume the master responsibility of data flow management on the primary bus **28**.

Cluster Controller Software Architecture

FIG. **5** shows the software architecture **118** employed in the cluster controller **26**. The cluster controller architecture **118** has an application layer supported by an operating system and an underlying hardware layer.

Four applications are shown in the application layer. A CD (compact disk) application **120** operates a CD player and a radio application **122** controls AM/FM radio functionality. A navigation application **124** utilizes the navigation and GPS components **42** and **44**, and a phone application **126** operates the communications module **46**.

The operating system **110** contains a shell **128**, application programming interfaces (APIs) **130–136**, a kernel **138**, device driver interfaces (DDIs) **140–144**, and a hardware abstraction layer (HAL) **146**.

The APIs **130–136** define the interfaces to the system platform that are available to the application programs **120–126**. Each API provides a common and consistent set of interfaces for applications development and provides access for the applications **120–126** to advanced features of the operating system. In this illustration, an audio API **130** provides interfaces for the CD application **120** and radio application **122**. Navigation API **132** provides interfaces for the navigation application **124** and a telephony API **134**

provides interfaces for the phone application **126**. A tuner API **136** provides interfaces for the radio applications

The kernel **138** provides the base operating system functionality. It is responsible for memory management, process management, and certain required file management functions. More specifically, the kernel manages virtual memory, scheduling, multitasking, multithreading, and exception handling.

The device driver interfaces (DDIs) **140–144** expose the services of a peripheral device to the kernel and applications. A well-defined set of DDIs allows different device drivers to look alike to the operating system and application software, removing the need to specifically tailor the operating system or application software to the device it communicates with. Here, a display driver **140** provides interfaces to a display (e.g., monitor, LCD), a disk driver **142** provides interfaces to the memory disk drive peripheral, and a USB (universal serial bus) driver **144** provides interfaces for a USB bus **148**.

A hardware abstraction layer (HAL) **146** is a thin layer of code that provides the interface between the kernel and the device hardware. Its goal is to provide software that allows a device driver to support the same device on all hardware platforms. This allows variations in hardware platforms (using different processors) without requiring a separate version of the operating system for each one.

The cluster controller architecture **118** of FIG. **5** is specifically tailored for an in-vehicle multimedia information and communication system. This architecture provides an example of how cluster controller **26(2)** might be configured to run cluster **66** (FIG. **3**). The cluster controller architecture **118** incorporates the functions of a radio, CD player, navigation, address book, paging, email, cellular phone, as well as a user-friendly display. The in-vehicle entertainment and information system is built on the flexible operating system **110** with common interfaces to enable developers to develop multiple devices and applications, without having to tailor these developments to a specific hardware platform or processor.

Alternatively, cluster controller **26(1)** that governs cluster **64** in FIG. **3** might be configured to run different applications and interface with different hardware components. For example, cluster controller **26(1)** might support applications pertaining to wipers, power door locks and seat controls, and the HAL **146** and DDIs provide interfaces for the wiper peripheral device, the door locks module, and the seat module.

Conclusion

The cluster architecture, with an open system OS platform-based controller at its core, allows construction of a vehicle information system that can handle multiple devices, run multiple applications, and permit communications among the devices. The devices can range from simple sensors and actuators or some semi-intelligent devices such as the entry control system, to intelligent devices such as a digital signal processor. The information flow is managed over common buses, with standard protocols, rather than dedicated wiring and specialized protocols.

Although the invention has been described in language specific to structural features and/or methodological steps, it is to be understood that the invention defined in the appended claims is not necessarily limited to the specific features or steps described. Rather, the specific features and steps are disclosed as preferred forms of implementing the claimed invention.

What is claimed is:

1. An automobile information system comprising:

a first data communications bus;

a first cluster of components connected to the first data communications bus;

a first cluster controller connected to the first data communications bus to manage information among the first cluster of components, and facilitate information flow between components in the first cluster of components;

a second cluster of components connected to the first data communications bus;

a second cluster controller connected to the first data communications bus to manage information among the second cluster of components, and facilitate information flow between components in the second cluster of components; and

a second data communications bus to interconnect the first and second cluster controllers.

2. An automobile information system as recited in claim **1**, wherein the first and second cluster controllers are each configured as general-purpose computers having open platform operating systems.

3. An automobile information system as recited in claim **1**, wherein communication between a component in the first cluster and a component in the second cluster is facilitated via the first and second cluster controllers.

4. An automobile information system as recited in claim **1**, wherein the first cluster of components comprises components selected from a group of components comprising a climate control component, a lighting component, a windshield wipers component, a door lock component, and a power window component.

5. An automobile information system as recited in claim **1**, wherein the second cluster of components comprises components selected from a group of components comprising an audio component, a navigation component, and a communications component.

6. An automobile comprising an automobile information system as recited in claim **1**.

7. An automobile information system comprising:

a data communications bus;

a first group of multiple components connected to the data communications bus;

a second group of multiple components connected to the data communications bus;

a first cluster controller to manage information among the first group of multiple components; and

a second cluster controller to manage information among the second group of multiple components.

8. An automobile information system as recited in claim **7**, wherein a component in the first group can receive information from a component in the second group via the data communications bus.

9. An automobile information system as recited in claim **7**, further comprising a second data communications bus to interconnect the first and second cluster controllers, wherein a component in the first group can receive information from a component in the second group via the second data communications bus.

10. An automobile comprising an automobile information system as recited in claim **9**.

11. An automobile information system as recited in claim **7**, wherein the first and second cluster controllers each comprise a general-purpose computer with an open platform operating system.

12. An automobile information system as recited in claim 7, wherein the first and second cluster controllers together comprise a general-purpose computer with an open platform operating system.

13. An automobile information system as recited in claim 7, wherein the first cluster controller receives information from an external source and shares the information with the first group of multiple components.

14. An automobile information system as recited in claim 7, wherein the first cluster controller facilitates information flow between at least two of the components of the first group.

15. An automobile comprising an automobile information system as recited in claim 7.

16. An automobile information system comprising:

a data communications bus;

a first group of multiple components connected to the data communications bus;

a second group of multiple components connected to the data communications bus;

a first cluster controller having an open platform, multitasking operating system to support multiple applications and provide interfaces to the first group of multiple components; and

a second cluster controller having an open platform, multitasking operating system to support multiple applications and provide interfaces to the second group of multiple components.

17. An automobile information system as recited in claim 16, further comprising a second data communications bus to interconnect the first and second cluster controllers.

18. An automobile comprising an automobile information system as recited in claim 16.

19. An automobile comprising an automobile information system as recited in claim 17.

* * * * *

UNITED STATES PATENT AND TRADEMARK OFFICE

CERTIFICATE OF CORRECTION

PATENT NO. : 6,434,459 B2
DATED : August 13, 2002
INVENTOR(S) : Wong et al.

It is certified that error appears in the above-identified patent and that said Letters Patent is hereby corrected as shown below:

Title page,
Item [56], U.S. PATENT DOCUMENTS, delete the cited reference "5,369,581".
FOREIGN PATENT DOCUMENTS, add the cited reference
-- WO 98/31118 07/1998 PCT --.
OTHER PUBLICATIONS, add the following cited references:
-- Harata, Y. et al, A Simplified Serial Communication Network Within a Vehicle, Toyota Central Research and Development Labs, Inc., Japan, May 1989, IEEE 39th Vehicular Technology Conference Volume 1, pp. 438-442 --.
-- Raith, T. et al., Netzwerke zur Integration von Systemfunktionen der Kraftfahrzeug-Elektronik, R. Oldenbourg Verlag, June 1995, Informationstechnik und Technische Informatik 37, pp. 28-35 --
-- Sasaki H. et al., LSI Technology for Meeting the Quality Goals for Automotive Electronics, NEC Corp., October 1990, Society of Automotive Engineers, Inc., pp. 241-248. --
-- Schmidt, E. et al., Required Elements of Integrated Vehicle Control Systems, GM Advanced Engineering Staff General Motors Technical Center, October 1990, Society of Automotive Engineers, Inc., pp. 463-471. --
-- Electricite, Revue Technique Automobile, France, 1991, Dossier, pp. XLVII-LVI --
-- Heberle, Klaus, So schnell wie notig, so langsam wie moglich, November 1992, Elektronik, pp. 78-83 --

Column 3,
Line 33, delete "s" between "The" and "primary".

Column 7,
Line 2, insert -- 122. -- after "applications".

Signed and Sealed this

Twelfth Day of August, 2003

JAMES E. ROGAN
Director of the United States Patent and Trademark Office